THE SECRETARY OF THE NAVY
WASHINGTON, D.C. 20350-1000

SECNAVINST 5000.2D
DASN(RD&A)ALM
October 16, 2008

SECNAV INSTRUCTION 5000.2D

From: Secretary of the Navy

Subj: IMPLEMENTATION AND OPERATION OF THE DEFENSE ACQUISITION SYSTEM AND THE JOINT CAPABILITIES INTEGRATION AND DEVELOPMENT SYSTEM

Ref:
(a) DOD Directive 5000.1, The Defense Acquisition System, of 12 May 03
(b) DOD Instruction 5000.2, Operation of the Defense Acquisition System, of 12 May 03
(c) Chairman of the Joint Chiefs of Staff Instruction (CJCSI) 3170.01F, Joint Capabilities Integration and Development System, of 1 May 07
(d) Chairman of the Joint Chiefs of Staff Manual (CJCSM) 3170.01C, Operation of the Joint Capabilities Integration and Development System, of 1 May 07
(e) Marine Corps Order (MCO) 3900.15B, Marine Corps Expeditionary Force Development System, of 10 Mar 08
(f) SECNAVINST 5430.7P
(g) SECNAVINST 5400.15C
(h) SECNAVINST 5200.35E
(i) SECNAVINST 5710.25B
(j) DOD 5000.4-M, Department of Defense Cost Analysis Guidance and Procedures, of 11 Dec 92
(k) DEPSECDEF Memorandum, Global Information Grid Enterprise Services (GIG ES): Core Enterprise Services (CES) Implementation, of 10 Nov 03

Encl:
(1) Chapter 1 - Table of Contents
(2) Chapter 2 - Capabilities Development and Acquisition Management Processes
(3) Chapter 3 - Statutory, Regulatory, and Contract Reporting Information and Milestone Requirements
(4) Chapter 4 - Information Technology (IT) Considerations
(5) Chapter 5 - Integrated Test and Evaluation
(6) Chapter 6 - Resource Estimation
(7) Chapter 7 - Systems Engineering and Human Systems Integration
(8) Chapter 8 - Acquisition of Services
(9) Chapter 9 - Program Management

1. Purpose. To issue mandatory procedures for Department of the Navy (DON) implementation of references (a), (b), (c), and (d) for major and non-major defense acquisition programs and major and non-major Information Technology (IT) acquisition programs.

2. Cancellation. SECNAVINST 5000.2C; SECNAVNOTE 5000, DON Requirements and Acquisition Process Improvements, of 26 February 2008; and Assistant Secretary of the Navy (Research, Development and Acquisition) (ASN(RD&A)) memorandum, Clarification of Required Signatures on Acquisition Documentation, of 19 February 2004.

3. Background. Reference (b) provides mandatory Defense Acquisition System policy. To aid the acquisition workforce in its implementation, a Defense Acquisition Guidebook was developed. This guidebook provides best practices, lessons learned, and expectations to support development of the information required by reference (b). The Defense Acquisition Guidebook can be found at http://akss.dau.mil/dag/DoD5000.asp?view=document. Additionally, an updated DON Acquisition and Capabilities Guidebook will be issued as a companion to this instruction and will be available on the DON Issuances Web site http://doni.daps.dla.mil/, under "Manuals" and the DON Research, Development and Acquisition Web site http://www.acquisition.navy.mil/, under "Policy and Guidance." This guidebook will contain citations from this instruction and other mandatory references only for clarification. The DON Acquisition and Capabilities Guidebook will not introduce new or additional mandatory guidance. Reference (e) contains the Marine Corps requirements generation procedures.

4. Discussion. Enclosure (1) is the Table of Contents. Enclosures (2) through (9) provide procedures to implement references (a), (b), (c), and (d).

5. Applicability and Precedence

a. The provisions of this instruction apply to all DON organizations, to all Acquisition Category (ACAT) acquisition programs, including Naval Intelligence and Naval Cryptologic ACAT programs, Abbreviated Acquisition Programs (AAPs), non-acquisition programs, and Rapid Deployment Capability programs. The designation ACAT I, when used in this instruction, signifies both ACAT ID and IC programs. Similarly, the designation ACAT IA, when used in this instruction, signifies both ACAT IAM and IAC programs.

b. References (a), (b), (c), (d), and this instruction, take precedence over any issuances conflicting with them, except for policy, direction, or guidance embodied in current statute, regulation, the Defense Federal Acquisition Regulation Supplement, and the Navy-Marine Corps Acquisition Regulation Supplement.

6. Overall Acquisition Process

a. Enclosures (2) through (9) of this instruction follow the enclosure numbering of, and implement, reference (b) and apply to all DON acquisition and non-acquisition programs as defined by each enclosure. The titles and general content of the enclosures of this instruction follow the titles and general content of the corresponding enclosures in reference (b).

b. Program Executive Officers (PEOs), Systems Command (SYSCOM) Commanders, Direct Reporting Program Managers (DRPMs), and Program Managers (PMs) shall ensure separation of functions so the authority to conduct oversight, source selection, contract negotiations/award does not reside in one person. As stewards of the national interest, all DON employees have an obligation to accept responsibility for ensuring the highest ethical conduct and shall question any perceived impropriety. These high ideals shall be continually emphasized to industry partners and within the acquisition community. Further information is available through the DON Acquisition Integrity Office on-line at http://ogc.navy.mil/aio.asp.

7. Responsibilities

a. ASN(RD&A) is the DON Component Acquisition Executive (CAE) responsible for DON acquisition per references (f) and (g). ASN(RD&A) is the reporting senior for PEOs and DRPMs. ASN(RD&A) shall provide performance input to Chief of Naval Operations (CNO) and Commandant of the Marine Corps (CMC) for SYSCOM Commanders for assigned acquisition programs and for Commander Naval Supply Systems Command for assigned logistics support. ASN(RD&A) shall provide performance input to CNO/CMC for SYSCOM Commanders' support of PEOs/DRPMs.

(1) ASN(RD&A) provides overall guidance and direction for the DON acquisition community's participation in the FORCEnet implementation process. As CAE, ASN(RD&A) ensures compliance with FORCEnet policies, integrated architecture, and technical standards during program reviews and milestone decisions.

(2) The roles and responsibilities of the DON acquisition community for FORCEnet implementation are included in ASN(RD&A) memorandum of 14 July 2005. The FORCEnet roles and responsibilities will be available in enclosure (7) of the updated DON Acquisition and Capabilities Guidebook at the DON Research, Development and Acquisition Web site.

b. The ASN(RD&A) Chief Systems Engineer (CHSENG) is the senior technical authority within the acquisition structure for the overall integrated architecture, integration and interoperability of current and future DON weapon system and IT system acquisition programs. ASN(RD&A) CHSENG provides senior leadership and focus within the acquisition structure on integration and interoperability across all Navy and Marine Corps PEOs, SYSCOM Commanders, DRPMs, and PMs. ASN(RD&A) CHSENG will:

(1) Ensure that the functional design of combat and Command, Control, Communications, Computers and Intelligence (C4I) systems is compatible with the overall integrated architecture as described in reference (d);

(2) Ensure that component systems are engineered and implemented to operate coherently with other systems as part of a larger naval, joint, and multinational force;

(3) When directed by ASN(RD&A), conduct integration and interoperability assessments of System of Systems (SoS) and Family of Systems (FoS) after coordination with test and certification agencies to determine adherence to interoperability requirements, architectural and technical standards in the Department of Defense (DoD) IT Standards Registry (DISR), and interface specifications. Advise ASN(RD&A) and SoS/FoS management authorities of the results of these assessments;

(4) Assess proposed architectural and technical standards in the DISR for their impact on acquisition programs. Advise ASN(RD&A) on the results of these assessments; and

(5) Provide architectural and technical standards guidance per the DISR to PMs.

c. The DON Chief Information Officer (CIO) is responsible for developing and issuing IT management policies and ensuring the creation, maintenance, and implementation of the DON IT Enterprise Architecture and Standards in coordination with ASN(RD&A) CHSENG, CNO/CMC, and SYSCOMs. The DON CIO is also responsible for confirming (or certifying for Major Automated Information Systems (MAIS)) that Mission Critical (MC) or Mission

Essential (ME) IT systems comply with the Clinger-Cohen Act (CCA) and are registered in the DON database https://www.dadms.navy.mil/. Additionally, per the CCA, the DON CIO recommends to the Secretary of the Navy (SECNAV) whether to continue, modify, or terminate IT programs. The DON CIO will:

(1) Review and direct development and use of a capability-related, outcome-based mission and business area integrated architectures to ensure interoperability of IT, including National Security Systems (NSS), throughout the DON.

(2) Implement the provisions of Division E of the CCA of 1996, per 40 United States Code (U.S.C.) Chapter 25, as amended.

(3) Provide policy on interoperability and supportability of IT, including NSS, per 10 U.S.C. Section 2223 and 40 U.S.C. Subtitle III.

(4) Review Information Support Plans' architecture contents in support of CCA certifications and confirmations.

(5) Review and approve information assurance strategies where required by this instruction.

(6) Develop and issue information assurance policies to ensure that information assurance and information systems security engineering are employed in the acquisition of all DON Automated Information System (AIS) applications.

d. CNO/CMC are responsible for the DON's joint capabilities integration and development process, implementing mission area/business area integrated architectures, Operational Test and Evaluation (OT&E), sustaining and continuously improving material readiness, planning and programming to satisfy operational capability needs, and providing acquisition logistics assistance to ASN(RD&A)(Deputy ASN(Acquisition and Logistics Management)) as well as all of the specific additional responsibilities listed in reference (g). CNO and CMC IT Functional Area Managers (FAMs), responsible for initially identifying IT requirements and evaluating functional portfolios in view of mission/business area integrated architectures, are listed at the DON CIO Web site (www.doncio.navy.mil). CNO program sponsors are responsible for identifying naval warfare, functional area, Sea Warrior/ Integrated Learning Environment, and IT, including NSS, program capability needs/requirements. The legacy term "requirements" as used in this instruction may be interpreted to mean "capability needs" as defined in reference (c). CNO resource sponsors are responsible for specific appropriation categories and may also

have dual responsibility as program sponsors. CNO/CMC is the reporting senior for SYSCOM Commanders. CNO/CMC shall provide performance input to ASN(RD&A) for military and civilian PEOs and DRPMs for in-service support. Note: Wherever "CNO/CMC" is used throughout this instruction, it should be interpreted to include, "or designee," unless otherwise stated.

e. The Commander, Operational Test and Evaluation Force (COMOPTEVFOR) and Director, Marine Corps Operational Test and Evaluation Activity (Director, MCOTEA) are responsible for independent OT&E of assigned Navy and the Marine Corps acquisition programs that require OT&E. Aviation programs sponsored by CNO undergo independent OT&E by COMOPTEVFOR.

f. PEOs, SYSCOM Commanders, and DRPMs are accountable for the specific responsibilities listed in reference (g), including administration of assigned acquisition programs, and reporting directly to the CAE for such programs. PEOs, SYSCOM Commanders, DRPMs, and PMs have authority, responsibility, and accountability for life-cycle management of all acquisition programs within their cognizance. PEOs, SYSCOM Commanders, and DRPMs shall implement appropriate management controls as required by references (a), (h), and (i) to ensure the policies contained in this instruction are implemented to the maximum extent practical. SYSCOM Commanders shall also provide support, including independent technical authority evaluations and certifications, as applicable, to PEOs, DRPMs, and PMs. PEOs and DRPMs shall report to CNO/CMC via the applicable SYSCOM Commander for in-service support.

g. Commander, Space and Naval Warfare Systems Command (COMSPAWARSYSCOM) (FORCEnet Chief Engineer (CHENG)) leads the development of FORCEnet integrated architecture System Views (SVs) and Technical Views (TVs) in coordination with Marine Corps Systems Command (MARCORSYSCOM), and ensures integration with the Naval Network Warfare Command (NETWARCOM) and Marine Corps Combat Development Command (MCCDC)-developed Operational Views (OVs).

h. The Deputy Assistant Secretary of the Navy (International Programs) (DASN(IP)), who is also the Director, Navy International Programs Office (Navy IPO), is responsible for formulating, developing, and managing international policy and oversight of the DON’s international programs. Areas of responsibility, per references (g) and (i), include armaments cooperation programs, cooperative research, development, and acquisition agreements, information and personnel exchange agreements, foreign comparative test projects, security

assistance programs, export controls, and technology transfer and disclosure policy.

i. The Naval Center for Cost Analysis (NCCA), which reports directly to the Assistant Secretary of the Navy (Financial Management and Comptroller) (ASN(FM&C)), is responsible for the following per 10 U.S.C. Section 5014 and references (b) and (j):

(1) Preparing life-cycle, Independent Cost Estimates (ICEs) for MDAPs designated ACAT IC at Milestones B and C and Full-Rate Production Decision Reviews (FRP DRs) and for component cost analyses of MAIS programs at Milestones A and B and FRP DRs. Also, NCCA conducts component cost analyses for joint ACAT IAM programs for which DON is the lead.

(2) Serving as the DON representative to the Office of the Secretary of Defense Cost Analysis Improvement Group (CAIG).

(3) Managing DON's Visibility and Management of Operating and Support Costs (VAMOSC) program.

(4) Serving as the focal point for cost-estimating policy and research within DON.

j. Deputy Chief of Naval Operations, Manpower, Training and Education (CNO (N1)) and CMC (Deputy Commandant, Manpower and Reserve Affairs (DC,M&RA)) are responsible for supporting the PEOs, SYSCOM Commanders, and DRPMs by assisting in exploring options that maximize use of technology to reduce manpower and personnel requirements and life-cycle cost. CNO (N1) and CMC (DC,M&RA) are the primary advisors for manpower and personnel for Acquisition Coordination Teams (ACTs). CNO (N1) and CMC (DC,M&RA) shall assist the Warfare Directors (Surface Warfare (CNO (N86)); Submarine Warfare (CNO (N87)); Air Warfare (CNO (N88)); Expeditionary Warfare (CNO (N85)); Command, Control, Communications, Computers, Intelligence, Surveillance, and Reconnaissance (C4ISR) (CNO (N83)); Oceanographer and Navigator of the Navy (CNO (N84)); and Special Programs (CNO (N89))), PEOs, SYSCOM Commanders, and DRPMs in identifying previous manpower shortfalls, determining legacy manpower, assessing the cumulative affects of manpower requirements across an SoS or FoS, and projecting manpower availability. The Naval Manpower Analysis Center is responsible for assisting Navy PMs and Integrated Product Teams (IPTs) with manpower requirements estimates, independent manpower impact statements, and contractor developed manpower estimates.

k. The Director, Total Force Requirements Division (CNO (N12)) is the resource sponsor for manpower, personnel, and individual training and education, and is the Navy approval authority for capabilities documents containing training, education, and related Human Systems Integration (HSI) requirements. CNO (N12) serves as HSI and Human Performance advocate, and is the Navy HSI requirements authority. In this role, CNO (N12) serves as the single governance authority for HSI policy, requirements and resources, participates in the identification of enterprise Manpower, Personnel, Training (MPT) and education shortfalls, and investigates innovative approaches and solutions to optimize manpower and improve performance.

l. The Director of Naval Intelligence (CNO (N2)) is responsible for threat intelligence and for validating threat tactics supporting capabilities development, program development, and test and evaluation of Navy acquisition programs. The Defense Intelligence Agency (DIA) will validate CNO (N2) threat assessments for ACAT ID programs.

m. The Deputy Chief of Naval Operations (Communication Networks) (CNO (N6)) is responsible for optimizing Navy network investments through centralized coordination of Navy warfighting and warfighting support analysis/assessments, Navy network capability development and integration, Joint and Navy requirements development, and resource programming. CNO (N6) will act as principal advisor to CNO for network matters; be matrixed with CNO (N2) for Battlespace Awareness, CNO (N3/N5) for Information Operations, and Deputy Chief of Naval Operations, Information, Plans and Strategy (CNO (N3/N5)) for Command and Control; and serve as the Navy's top level advocate for Information Management/Information Technology resources throughout the Navy. CNO (N6) will also serve as the Department of the Navy Deputy Chief Information Officer (Navy).

n. The Chief of Naval Research (CNR) is responsible for Science and Technology (S&T) planning and implementation supporting the requirements set forth in this instruction. CNR, as the DON S&T Executive, shall approve technology readiness assessments for ACAT I, IA, and II programs.

o. Commander, NETWARCOM and Commanding General, MCCDC, have the lead in developing FORCEnet integrated architecture OVs.

p. Director, Strategic Systems Programs (DIRSSP) shall identify acquisition programs or research efforts most likely to be affected by arms control treaties. Coordinate with affected PMs to ensure that plans and designs for these programs are

compliant with treaty requirements. Assist PMs in meeting arms control certifications as required by this instruction. Additionally, DIRSSP shall identify and conduct review of programs and projects of DON warfare centers, other shore activities and operating forces that are most likely affected by arms control treaties. Assist these DON activities to ensure treaty compliance.

Detailed responsibilities for the foregoing organizations, including those for IT, are found in enclosures (2) through (9).

q. DON activities shall:

(1) Ensure that the policies, procedures, documentation, and reports as required by references (a), (b), (c), (d), and (k), and this instruction and its enclosures are followed.

(2) Review existing guidance and instructions and cancel or update to conform with references (a), (b), (c), (d), (k), and this instruction.

(a) Unless prescribed by statute or specifically authorized herein, the acquisition policies and procedures of this instruction will not be supplemented without the prior approval of ASN(RD&A).

(b) Implementing directives, instructions, regulations, memorandums, and related issuances shall be kept to a minimum.

(c) CNO and CMC may issue minor revisions to the joint capabilities integration and development procedures of this instruction via a change transmittal.

(3) Distribute this instruction to appropriate command personnel.

8. Reports and Forms

a. Reports. The following reports listed in enclosure (3) have been assigned report symbols and approved per SECNAV Manual 5214.1:

(1) Selected Acquisition Report (SAR), DD-AT&L (Q&A) 823 (5000)

(2) Unit Cost Report (UCR), DD-AT&L (Q&R) 1591 (5000)

(3) Registration of Mission-Critical and Mission-Essential Information Systems (RMC&MEIS), DD-C3I (AR) 2096 (5000)

(4) Defense Acquisition Executive Summary (DAES), DD-AT&L (Q) 1429 (5000)

b. Forms

(1) Standard Form (SF)_298, Report Documentation Page, is available on the General Services Administration (GSA) Web site at http://www.gsa.gov/Portal/gsa/ep/formslibrary.do?formType=SF.

(2) DD Form 1586, Contract Funds Status Report, is available on the DoD Forms Management Program Web site at http://www.dtic.mil/whs/directives/infomgt/forms/formsprogram.htm.

9. Records Management. All records of an acquisition program shall be created and managed for the life-cycle of the program per SECNAV Manual 5210.1, Department of the Navy Records Management Program, Records Management Manual.

10. Summary of Changes in this Revision

a. Authority for oversight, source selection, and contract negotiations/award shall not be vested in the same individual. Reemphasized the accountability of acquisition personnel for the highest ethical conduct in the execution of their responsibilities.

b. Added the requirement for Navy Joint Capabilities Integration and Development System (JCIDS) capabilities documents to be vetted through the Naval Capabilities Board (NCB) and the Resources and Requirements Review Board (R3B) prior to approval.

c. Added statutory requirement for Key Performance Parameters (KPPs) for force protection and survivability.

d. Added FORCEnet implementation for IT systems, including NSS.

e. Added the requirement for coordination of the Type Commander's (TYCOM's) surface Ship Maintenance (SHIPMAIN) Modernization Entitled Process with the acquisition process.

f. Added Defense Business System Modernization Certification Process.

g. Added increased emphasis on system safety in systems engineering.

h. Added change in Earned Value Management applicability.

i. Revised the statutory and policy requirements for the acquisition of services.

j. Updated references and added hyperlinks.

k. Incorporated SECNAVNOTE 5000 DON Requirements and Acquisition Process Improvements.

l. Added statutory program certification requirements for ACAT I and II programs.

m. Added statutory reporting requirements for ACAT IA programs.

Donald C. Winter

Distribution:
Electronic only, via Department of the Navy Issuances Web site:
http://doni.daps.dla.mil/

Chapter 1
Table of Contents

Chapter 2 **Capabilities Development and Acquisition Management Processes**
2.1 Capabilities Development Process
2.1.1 DON Principal Capabilities Points of Contact
2.1.1.1 Chief of Naval Operations (CNO)/Commandant of the Marine Corps (CMC) Responsibilities
2.1.1.2 Navy Program and Resource Sponsor Responsibilities
2.1.1.3 Deputy CNO (Integration of Capabilities and Resources) (CNO (N8)) Responsibilities
2.1.1.4 Deputy CNO (Communication Networks) (CNO (N6)) Responsibilities
2.1.2 DON Capabilities Development and Processing Procedures
2.1.2.1 Naval Capabilities Development Process
2.1.2.2 Marine Corps Capabilities Development Process for Programs with Navy Fiscal Sponsorship
2.1.2.3 Weapon and Information Technology Systems Capabilities Development and Processing Procedures
2.1.2.4 Fleet Modernization Program
2.1.2.5 FORCEnet
2.2 Acquisition Management Process
2.2.1 General Purpose
2.2.2 Specific Application
2.3 Overview of the Acquisition Management Process
2.3.1 Integrated Product Teams (IPTs)
2.3.1.1 Overarching Integrated Product Teams (OIPTs)
2.3.1.2 Working Integrated Product Teams (WIPTs)
2.3.2 Acquisition Coordination Teams (ACTs)
2.4 Categories of Acquisition Programs and Milestone Decision Authorities
2.4.1 ACAT I (Major Defense Acquisition Program (MDAP))
2.4.2 ACAT IA (Major Automated Information System (MAIS))
2.4.3 ACAT II
2.4.4 ACAT III
2.4.5 ACAT IV
2.4.6 Abbreviated Acquisition Programs (AAPs)
2.4.6.1 Weapon System and Information Technology (IT) System AAP Procedures
2.4.7 Program Modifications
2.5 Capability Concept Development and Program Decision Points and Phases
2.5.1 User Needs and Technology Opportunities
2.5.2 Program Tailoring
2.5.3 Program Decision Points Tailoring
2.5.4 Program Decision Points and Phases

2.5.4.1 Concept Decision
2.5.4.2 Concept Refinement
2.5.4.3 Milestone A
2.5.4.4 Technology Development
2.5.4.5 Milestone B
2.5.4.6 System Development and Demonstration
2.5.4.6.1 System Integration
2.5.4.6.2 Design Readiness Review
2.5.4.6.3 System Demonstration
2.5.4.7 Milestone C
2.5.4.8 Production and Deployment
2.5.4.8.1 Low-Rate Initial Production (LRIP)
2.5.4.8.2 Full-Rate Production Decision Review (FRP DR)
2.5.4.8.3 FRP and Deployment
2.5.4.9 Operations and Support
2.5.4.9.1 Sustainment
2.5.4.9.1.1 Sustainment Support
2.5.4.9.2 Disposal
2.5.5 Modifications
2.6 Review of the Legality of Weapons Under International Law and Compliance with Arms Control Agreements
2.6.1 Review of the Legality of Weapons Under International Law
2.6.2 Review for Compliance with Arms Control Agreements
2.7 Non-Acquisition Programs
2.8 Rapid Deployment Capability (RDC) Process and Procedures
2.8.1 Objectives of the RDC Process
2.8.2 Procedures for RDC Initiation and Planning
2.9 Executive Review Procedures
2.9.1 DON Program Decision Process
2.9.2 IT Acquisition Board (ITAB) Reviews
2.9.3 Defense Space Acquisition Board (DSAB) Reviews
2.9.4 Defense Business System Management Committee (DBSMC) Certification and Approval
2.9.4.1 Defense Business System Definition
2.9.4.2 Roles and Responsibilities
2.10 Source Selection Authority (SSA)
2.10.1 ACAT I, IA, and II Programs
2.10.2 ACAT III, IV, and Abbreviated Acquisition Programs
2.10.3 Other Competitively Negotiated Acquisitions
2.10.4 Source Selection Advisory Council (SSAC)
2.11 Two-Pass/Six-Gate DON Requirements and Acquisition Governance Process
2.11.1 Purpose
2.11.2 Objective
2.11.3 Scope and Applicability

2.11.4	Organization and Procedures
2.11.4.1	Concept Decision and Concept Refinement Phase
2.11.4.1.1	Pass 1
2.11.4.1.1.1	Gate 1
2.11.4.1.1.2	Gate 2
2.11.4.1.1.3	Gate 3
2.11.4.2	Milestone A and Technology Development Phase
2.11.4.2.1	Pass 2
2.11.4.2.1.1	Gate 4
2.11.4.3	Milestone B and System Development and Demonstration Phase
2.11.4.3.1	Pass 2
2.11.4.3.1.1	Gate 5
2.11.4.3.1.2	Gate 6
2.11.4.4	DON Requirements/Acquisition Gate Review Membership
2.11.4.4.1	Chairperson
2.11.4.4.2	Principal Members
2.11.4.4.3	Advisory Members
2.11.4.5	DON Requirements/Acquisition Individual Gate Membership and Input/Exit Criteria
2.11.4.6	System Design Specification (SDS) Description
2.11.5	Responsibilities
2.11.5.1	ASN(RD&A)
2.11.5.2	CNO/CMC
2.11.5.3	DCNO (N8)/DC, CD&I
2.11.5.4	Program Executive Officers (PEOs)/Systems Commands (SYSCOMs) Commanders
2.11.5.5	ASN(FM&C)FMB
2.11.5.6	OGC
2.11.6	Industry Involvement
Annex 2-A	DON Requirements/Acquisition Two-Pass/Six-Gate Process with Development of a System Design Specification (illustrated example for program initiation at Milestone A)
Annex 2-A	DON Requirements/Acquisition Two-Pass/Six-Gate Process with Development of a System Design Specification (illustrated example for program initiation at Milestone B)
Annex 2-B	Table E2T3 DON Requirements/Acquisition Gates, Membership, Input Criteria, Goals/Exit Criteria, and Briefing Content
Annex 2-B	Gate 1 Exit Criteria Template
Annex 2-B	Gate 2 Exit Criteria Template
Annex 2-B	Gate 3 Exit Criteria Template
Annex 2-B	Gate 4 Exit Criteria Template
Annex 2-B	Gate 5 Exit Criteria Template
Annex 2-B	Gate 6 Exit Criteria Template
Annex 2-C	System Design Specification (SDS) Description

Chapter 3 Statutory, Regulatory, and Contract Reporting Information and Milestone Requirements

3.1	Program Information
3.2	Exit Criteria
3.3	Technology Maturity
3.4	Technology Development and Acquisition Strategies
3.4.1	General Considerations for a Technology Development Strategy and an Acquisition Strategy
3.4.2	Requirements/Capability Needs
3.4.3	Program Structure
3.4.4	Risk
3.4.4.1	Interoperability and Integration Risk
3.4.5	Program Management
3.4.6	Design Considerations Affecting the Acquisition Strategy
3.4.6.1	Open Architecture
3.4.6.2	Interoperability and Integration
3.4.6.2.1	Integrated Architecture
3.4.6.3	Aviation Critical Safety Items
3.4.6.4	Information Assurance
3.4.6.5	Standardization and Commonality
3.4.7	Support Strategy
3.4.7.1	Human Systems Integration (HSI)
3.4.7.2	Environmental, Safety, and Occupational Health Considerations
3.4.7.3	Demilitarization and Disposal Planning
3.4.7.4	Post Deployment Performance Review
3.4.7.5	Program Protection Planning
3.4.8	Business Strategy
3.4.8.1	International Cooperation
3.4.8.1.1	International Cooperative Strategy
3.4.8.1.2	International Interoperability
3.5	Intelligence Support
3.6	Command, Control, Communications, Computers, and Intelligence (C4I)/Information Support
3.7	Electromagnetic Environmental Effects (E3) and Electromagnetic Spectrum Certification and Supportability
3.7.1	E3
3.7.2	Electromagnetic Spectrum Certification and Supportability
3.7.2.1	Electromagnetic Spectrum Certification Compliance
3.7.2.2	Electromagnetic Spectrum Supportability
3.8	Technology Protection
3.9	Periodic Reporting
3.9.1	Program Plans
3.9.2	Acquisition Program Baseline (APB) Reporting

3.9.3 Defense Acquisition Executive Summary (DAES)
3.9.4 Selected Acquisition Report (SAR)
3.9.5 Unit Cost Reports (UCRs)
3.9.6 Past Performance Reporting/Reports
3.10 Program Certification and Assessments
3.10.1 Certification Requirements at Milestone A
3.10.2 Certification Requirements at Milestone B
3.10.3 Assessments Required Prior to Approving the Start of Construction on First Ship of Shipbuilding Program
3.10.3.1 Production Readiness Review Report and Certification
3.10.3.2 Production Readiness Review Report Assessment
3.10.3.3 Definitions

Chapter 4 Information Technology (IT) Considerations
4.1 Clinger-Cohen Act (CCA) (40 U.S.C., Subtitle III) Compliance
4.1.1 CCA Compliance Package Development and Processing for ACAT IAM, IAC, ID, IC, and II Programs containing Mission-Critical (MC) or Mission-Essential (ME) IT Systems including National Security Systems (NSS)
4.1.2 CCA Compliance Package Development and Processing for ACAT III, IV, and AAP Programs containing MC or ME IT Systems including NSS
4.2 Contracts for Acquisition of MC or ME IT Systems including NSS
4.3 Information Integration and Interoperability
4.4 Information Assurance (IA) Program Manager (PM) Responsibilities
4.5 Records Management

Chapter 5 Integrated Test and Evaluation
5.1 Test and Evaluation (T&E) Overview
5.2 DON Responsibilities for T&E
5.2.1 Principal Navy T&E Points of Contact and Responsibilities
5.2.1.1 Chief of Naval Operations (CNO) (N091)
5.2.1.2 Program Manager (PM)
5.2.1.3 Commander, Operational Test and Evaluation Force (COMOPTEVFOR)
5.2.1.4 Naval Systems Commands (SYSCOMs)
5.2.1.4.1 Naval Air Systems Command (NAVAIRSYSCOM)
5.2.1.4.1.1 Naval Air Systems Command Technical Assurance Board (NTAB)
5.2.1.4.2 Weapons System Explosive Safety Review Board (WSESRB)

5.2.1.5 Office of Naval Intelligence (ONI)
5.2.2 Principal Marine Corps Points of Contact and Responsibilities
5.2.2.1 Deputy Commandant for Manpower and Reserve Affairs (DC,M&RA)
5.2.2.2 Deputy Commandant for Installations and Logistics (DC,I&L)
5.2.2.3 Director, Marine Corps Intelligence Activity (MCIA)
5.2.2.4 Deputy Commandant for Combat Development and Integration (DC,CD&I)
5.2.2.5 Commanding General, Marine Corps Systems Command (CG, MARCORSYSCOM)
5.2.2.6 Director, Marine Corps Operational Test and Evaluation Activity (MCOTEA)
5.2.2.7 Marine Forces
5.2.3 Acquisition Items Exempt from T&E Provisions within this Instruction
5.2.3.1 Items Exempt
5.2.3.2 T&E Considerations that Apply to Exempt Items
5.3 T&E Strategy
5.3.1 Preparation and Milestones
5.3.2 Strategy Approval
5.4 T&E Planning
5.4.1 Early Planning for Integrated T&E
5.4.2 Testing Increments in Evolutionary Acquisition
5.4.2.1 Innovative Testing
5.4.2.2 Initial Operational Test and Evaluation (IOT&E)
5.4.2.3 Software Intensive Systems
5.4.3 Test and Evaluation Working Integrated Product Team (T&E WIPT)
5.4.4 Navy Test and Evaluation Coordination Group (TECG)
5.4.5 T&E Funding Responsibility
5.4.5.1 Developing Activity Responsibilities
5.4.5.2 Fleet Commanders Responsibilities
5.4.5.3 Board of Inspection and Survey (INSURV) Responsibilities
5.4.5.4 Non-Acquisition Programs Responsibilities
5.4.6 Research, Development, Test and Evaluation (RDT&E) Support Provided by Fleet Commanders
5.4.7 Test and Evaluation Master Plan (TEMP)
5.4.7.1 Milestone B TEMP Approval for IT Systems, including NSS, and Spectrum Dependent Systems
5.4.7.2 Milestone C TEMP Approval for IT Systems, including NSS, and Spectrum Dependent Systems
5.4.7.3 Capabilities and Key Performance Parameter (KPP) Traceability to Critical Operational Issues (COIs)
5.4.7.4 Performance Thresholds and Critical Technical Parameters (CTPs)

5.4.7.5 Test Planning for Commercial and Non-Developmental Items
5.4.7.6 Use of Existing T&E Infrastructure
5.4.7.7 Environmental Protection
5.4.7.8 Operational Test and Evaluation (OT&E) for Non-Acquisition Programs
5.4.7.9 Modeling and Simulation (M&S)
5.4.7.10 Interoperability Testing and Certification
5.4.7.11 Information Assurance (IA) and Information Systems Security Certification and Accreditation
5.4.7.12 Anti-Tamper Verification and Validation Testing
5.4.7.13 Test & Evaluation Identification Number (TEIN) Assignment
5.5 Developmental Test and Evaluation (DT&E)
5.5.1 DT&E Data
5.5.2 Information Assurance and Security Certification during DT
5.5.3 Production Qualification T&E
5.6 Certification of Readiness for Operational Testing
5.6.1 DON Criteria for Certification
5.6.2 Navy Procedures for Certification
5.6.2.1 Certification for OT Without T&E Exceptions
5.6.2.2 Certification for OT With T&E Exceptions
5.6.3 Marine Corps Procedures for Certification
5.6.4 Navy T&E Exceptions
5.6.4.1 Waivers
5.6.4.2 Deferrals
5.6.4.2.1 When Deferrals are Appropriate
5.6.4.2.2 Limitations to Test
5.6.4.3 CNO (N091) Approval of a Deferral Request
5.6.5 Navy Waiver and Deferral Requests
5.6.6 Marine Corps Waivers
5.7 OT&E
5.7.1 Independent OT&E
5.7.1.1 Navy Start of OT&E
5.7.1.2 Navy De-certification and Re-certification for OT&E
5.7.2 OT&E Plans
5.7.3 Operational Test (OT) for Configuration Changes
5.7.4 OT for Information Assurance and System Security Certification and Accreditation
5.7.5 Quick Reaction Assessment (QRA)
5.7.6 OT&E Information Promulgation
5.7.6.1 Milestone Decision Authority (MDA) Briefing
5.7.7 Use of Contractors in Support of OT&E
5.7.8 Visitors
5.8 Annual Office of the Secretary of Defense (OSD) T&E Oversight List
5.9 Live Fire Test and Evaluation (LFT&E)

5.10 Comparative Testing
5.10.1 Programs Defined by Statute
5.10.2 Navy Management of Comparative Testing
5.10.3 Developing Activity (DA) Comparative Testing Responsibilities
5.11 Test and Evaluation Reporting
5.11.1 DoD Component (DON) Reporting of Test Results
5.11.1.1 DT&E Reports
5.11.1.2 Navy OT&E Reports
5.11.1.3 Marine Corps Operational Test Reports (TRs)
5.11.2 LFT&E Report for FRP DR
5.11.2.1 LFT&E Waivers
5.11.3 Beyond Low-Rate Initial Production (LRIP) Report
5.11.4 Director, Operational Test and Evaluation (DOT&E) Annual Report
5.11.5 Foreign Comparative Test Notification and Report to Congress
5.11.6 Electronic Warfare (EW) T&E Report

Chapter 6 Resource Estimation
6.1 Resource Estimates
6.1.1 Life-Cycle Cost Estimates
6.1.2 Cost Analysis Requirements Description (CARD)
6.1.3 Manpower Estimates
6.2 Affordability
6.3 Contract Management Reports
6.3.1 Contractor Cost Data Reporting (CCDR) for Hardware and Software and Software Resources Data Report (SRDR)
6.3.2 Contract Performance Report (CPR)
6.3.3 Integrated Master Schedule (IMS)
6.3.4 Contract Funds Status Report (CFSR)
6.4 Analysis of Alternatives (AoA)
6.4.1 Weapon System AoA
6.4.2 IT AoA
6.5 Cost as an Independent Variable (CAIV)
6.5.1 Cost/Schedule/Performance Tradeoffs

Chapter 7 Systems Engineering and Human Systems Integration
7.1 Systems Engineering
7.1.1 Manufacturing and Production
7.1.2 Quality
7.1.3 Acquisition Logistics and Sustainment
7.1.4 Open Architecture
7.1.5 Reliability, Availability, and Maintainability (RAM)
7.1.6 Interoperability and Integration
7.1.6.1 IT Design Considerations
7.1.6.2 DoD Architecture Framework/Defense Information

Technology Standards Registry (DISR)
7.1.6.3 FORCEnet Integrated Architecture
7.1.6.3.1 System of Systems (SoS) or Family of Systems (FoS) Integration and Interoperability Validation
7.1.6.4 Interoperability and Integration Support
7.1.7 Survivability
7.1.8 Shipboard System Integration
7.1.9 Performance Specifications
7.1.9.1 System Performance for SoS and FoS Programs
7.1.9.2 Standardization and Commonality
7.1.10 Precise Time and Time Interval (PTTI) Support
7.1.11 Geospatial Information and Services (GI&S)
7.1.12 Natural Environmental Support
7.1.13 Electromagnetic Environmental Effects (E3) and Spectrum Supportability
7.2 Human Systems Integration (HSI)
7.2.1 HSI in Acquisition
7.2.2 Manpower, Personnel, and Training (MPT)
7.2.3 Human Factors Engineering (HFE)
7.2.4 Personnel Survivability
7.2.5 Habitability
7.3 Environmental, Safety, and Occupational Health (ESOH)
7.3.1 ESOH Compliance
7.3.2 National Environmental Policy Act (NEPA) and Executive Order (EO) 12114 Environmental Effects Abroad
7.3.3 Safety and Health
7.3.4 Hazardous Materials Management
7.3.5 Pollution Prevention
7.3.6 Explosives Safety
7.3.7 Aviation Critical Safety Items (CSIs)

Chapter 8 Acquisition of Services
8.1 Introduction
8.2 Applicability
8.3 Definitions
8.4 Responsibility
8.5 Review and Approval Thresholds
8.6 Review Procedures
8.7 Outcomes
8.8 Metrics
8.9 Data Collection
8.10 Execution Reviews
8.11 Decision Authority Acquisition Management Responsibilities

Chapter 9 **Program Management**
9.1 Assignment of Program Executive Responsibilities
9.2 International Cooperative Program Management
9.3 Joint Program Management

Chapter 2
Capabilities Development and Acquisition Management Processes

References:
(a) U.S. Navy Regulations, 1990
(b) Chairman of the Joint Chiefs of Staff Instruction (CJCSI) 3170.01F, Joint Capabilities Integration and Development System, of 1 May 07
(c) Chairman of the Joint Chiefs of Staff Manual (CJCSM) 3170.01C, Operation of the Joint Capabilities Integration and Development System, of 1 May 07
(d) OPNAVINST 5420.108B
(e) SECNAVINST 5400.15C
(f) SECNAVINST 5200.40
(g) SECNAVINST 5000.36A
(h) Under Secretary of the Navy Memorandum, Designation of Department of the Navy (DON) Functional Area Managers, of 14 May 02
(i) DOD Directive 4630.05, Interoperability and Supportability of Information Technology (IT) and National Security Systems (NSS), of 5 May 04
(j) Marine Corps Order (MCO) 3900.15B, Marine Corps Expeditionary Force Development System, of 10 Mar 08
(k) USD(P&R) Memorandum, Interim Policy and Procedures for Strategic Manpower Planning and Development of Manpower Estimates, of 10 Dec 03
(l) CJCSI 6212.01D, Interoperability and Supportability of Information Technology and National Security Systems, of 8 Mar 06
(m) DOD Instruction 5000.2, Operation of the Defense Acquisition System, of 12 May 03
(n) DOD Directive 5000.1, The Defense Acquisition System, of 12 May 03
(o) NAVSO P-35, DON Publications and Printing Regulations, of May 79
(p) OPNAVINST 3104.1
(q) SECNAVINST 5420.188F
(r) SECNAVINST 4105.1A
(s) USD(AT&L) memorandum, Total Life Cycle Systems Management and Performance Based Logistics, of 24 Oct 03
(t) SECNAVINST 5710.23C
(u) Under Secretary of the Air Force Document, National Security Space Acquisition Policy 03-01, of 27 Dec 04

(v) Public Law 108-375, Ronald W. Reagan National Defense Authorization Act for Fiscal Year 2005, Section 332, Defense Business Enterprise Architecture, System Accountability, and Conditions for Obligation of Funds for Defense Business System Modernization, of 28 Oct 04
(w) Goldwater-Nichols Department of Defense Reorganization Act of 1986, Public Law 99-433, of 1 Oct 86
(x) Vice Chief of Naval Operations (VCNO) Memorandum 5420 N09, Resources and Requirement Review Board (R3B) Charter, of 23 Mar 06
(y) Commandant of the Marine Corps (CMC) Policy Memorandum 1-02, Marine Requirements Oversight Council (MROC), of 17 Jan 02
(z) USD(AT&L) Memorandum, Configuration Steering Boards, of 30 Jul 07

2.1 Capabilities Development Process

The Department of the Navy (DON) uses a capabilities-based approach to define, develop, and deliver technologically sound, sustainable, and affordable military capabilities. This approach is implemented via the Naval Capabilities Development Process (NCDP), the Expeditionary Force Development System (EFDS), and the Joint Capabilities Integration and Development System (JCIDS) to improve existing and develop new warfighting capabilities. Coordination among Department of Defense (DoD) Components is an essential element of these processes. Joint concepts and integrated architectures are used to identify and prioritize capabilities gaps and integrated Doctrine, Organization, Training, Materiel, Leadership and education, Personnel, and Facilities (DOTMLPF) solutions. The following paragraphs and applicable references outline the major roles and responsibilities and provide the process for DON capabilities development.

2.1.1 DON Principal Capabilities Points of Contact

2.1.1.1 Chief of Naval Operations (CNO)/Commandant of the Marine Corps (CMC) Responsibilities

As user representatives, CNO/CMC shall execute the responsibilities defined in references (a) through (f) to identify, define, validate, and prioritize mission requirements/capabilities through JCIDS and allocate program

resources to meet those requirements/needs through the Planning, Programming, Budgeting, and Execution System (PPBES). In addition, CNO and CMC shall coordinate the test and evaluation process as described in enclosure (5). Continuous interaction with the Assistant Secretary of the Navy (Research, Development and Acquisition) (ASN(RD&A)) is required throughout the acquisition process.

2.1.1.2 Navy Program and Resource Sponsor Responsibilities

Program sponsors are responsible for identifying Navy program requirements. They shall provide the key interface between the JCIDS, the NCDP, the EFDS, the PPBES, and the Defense Acquisition System. A requirements officer shall be assigned for each platform, system, or initiative for which funding is programmed or planned. Prior to program initiation, a Capability Development Document (CDD), Capability Production Document (CPD) (for Acquisition Category (ACAT) programs), or program/resource sponsor memorandum (for Abbreviated Acquisition Programs (AAPs) or non-acquisition programs) shall define the program requirements for each platform, system, or initiative for which funding is programmed or planned. The resource sponsors are responsible for managing specific appropriation categories. Resource sponsors may also have dual responsibility as program sponsors. CDDs and CPDs are approved by Deputy Chief of Naval Operations, Integration of Capabilities and Resources (CNO (N8)) or higher per this instruction. Resource Sponsors such as CNO (N85, N86, N87, N88 and N89) have AAP requirements memorandum approval authority. Requirement Memorandums, Requirements Letters or Letters of Requirements for ACAT programs are not authorized. An Initial Capabilities Documents (ICD) defines capability gaps and potential solutions that could fill those capability gaps, but an ICD does not define program requirements; CDDs and CPDs do.

The program sponsor, in coordination with the resource sponsor, shall:

1. Act as the user representative;

2. Establish and provide user-based cost, schedule, and total force performance requirements through validated capabilities needs documents and other associated documentation;

3. Provide explicit direction for the operations and support environment associated with all capabilities needs;

4. Program the funds necessary to develop and sustain programs that satisfy capabilities needs;

5. Define the thresholds and performance parameters for operational testing; and

6. For IT systems, including National Security Systems (NSS):

a. Ensure capabilities documents are reviewed by DON Functional Area Managers (FAMs) per references (g), (h), and (i). A current list of FAMs responsible for each respective naval functional area is available at the DON Chief Information Officer (CIO) Web site (http://www.doncio.navy.mil/).

b. Define mission-related, outcome-based performance measures for IT systems, including NSS.

2.1.1.3 Deputy CNO (Integration of Capabilities and Resources) (CNO (N8)) Responsibilities

CNO (N8) shall coordinate staffing, validation, and approval of Navy Joint Capabilities Documents (JCDs), ICDs, CDDs, CPDs, and joint DOTMLPF Change Recommendations (DCRs) for all Navy and joint systems within the JCIDS process.

For those documents assigned a Joint Potential Designator (JPD) of Joint Requirements Oversight Council (JROC) Interest, the approval and validation authority shall be the JROC. The JROC may delegate approval authority for non-Key Performance Parameter (KPP) changes to the Navy. JROC review of "JROC Interest" CDDs and CPDs is required when appropriate authority directs a change in a KPP. For documents assigned a JPD of Joint Integration, Joint Information, or Independent, the CNO/CMC will be designated as the approval and validation authority.

Additionally, CNO (N8) will coordinate the Navy staffing of capabilities documents developed by other Services.

Per the joint ASN(RD&A) and CNO (N8) memorandum of 26 July 2007, CNO (N8) also serves as the Navy Urgent Needs Gatekeeper for assignment of action for Navy Urgent Operational Needs submitted by Navy Component Commanders and Joint Urgent Operational Needs statements assigned to the Navy for action.

2.1.1.4 Deputy CNO (Communication Networks) (CNO (N6)) Responsibilities

CNO (N6) is responsible for optimizing Navy network investments through centralized coordination of Navy warfighting and warfighting support analysis/assessments, Navy network capability development and integration, Joint and Navy requirements development, and resource programming. CNO (N6) will act as principal advisor to CNO for network matters; be matrixed with CNO (N2) for Battlespace Awareness, CNO (N3/N5) for Information Operations, and CNO (N3/N5) for Command and Control; and serve as the Navy's top level advocate for Information Management/IT resources throughout the Navy. CNO (N6) will also serve as the DON Deputy CIO (Navy).

2.1.2 DON Capabilities Development and Processing Procedures

See the Operation of the JCIDS, reference (c), for capabilities documentation development procedures. The Naval Capabilities Board (NCB) or the Resources and Requirements Review Board (R3B) shall be the main forums in which JCIDS documents are vetted and approved by CNO (N8)/Vice Chief of Naval Operations (VCNO)/CNO prior to entry into the Joint Staff for processing and Joint review. Specific NCB and R3B procedures can be found in VCNO memorandum, "Naval Capabilities Board (NCB) Charter," 3 May 2006 and VCNO memorandum, "Resources and Requirements Review Board (R3B) Charter," 23 March 2006. DON Capabilities and Acquisition Guidebook details the specifics of JCIDS document flow through the Navy process and shall be followed except as waived by CNO (N8) or the Joint Staff (J8), as required.

The NCB/R3B will review and endorse all Navy JCIDS documents. The NCB/R3B recommends validation of all warfighting requirements, including KPPs and Key System Attributes (KSAs) (see paragraph 2.1.2.3 for definition). For capabilities documents that require VCNO/CNO level approval, the NCB/R3B provides a recommendation for validation.

The R3B is the Navy's 3- and 4-star forum for reviewing and making decisions on Navy requirements and resource issues. The R3B acts as the focal point for decision-making regarding Navy/JCIDS ACAT I through IV requirements, the validation of non-acquisition related, emergent, and Joint requirements, the synchronization of Planning, Programming, Budgeting, and Execution (PPBE) milestones, and resolution of cross-enterprise or cross-sponsor issues. CNO (N8) serves as the Chairperson, but may invite another R3B member if the issue warrants. The VCNO or

CNO may serve as Chairperson of the R3B if the issue requires a 4-star level decision.

2.1.2.1 Naval Capabilities Development Process

The NCDP translates strategic guidance and operational concepts to specific warfighting capabilities. The NCDP is a Capabilities-Based Assessment (CBA) process used to develop the naval warfare Integrated Capabilities Plan (ICP). The ICP serves as the Navy's "warfare investment strategy" for programming operational capabilities. The product of the ICP and resource sponsor programming and analysis will be the Sponsor Program Proposal (SPP), detailing systems required to deliver the warfighting capabilities identified in the ICP. These systems will be acquired through the Defense acquisition process.

2.1.2.2 Marine Corps Capabilities Development Process for Programs with Navy Fiscal Sponsorship

For capabilities development process with Marine Corps fiscal sponsorship, see reference (j). The following specific procedures shall apply to Marine Corps programs that have Navy fiscal sponsorship (e.g., aviation programs). The capabilities documents shall be prepared and submitted by the CMC (Deputy Commandant, Combat Development and Integration (DC,CD&I)) to the applicable Office of the Chief of Naval Operations (OPNAV) program sponsor, via Joint Requirements and Acquisition Branch (CNO (N810)), for concurrence, prioritization, staffing, and endorsement. CMC (DC,CD&I) shall coordinate validation and approval as follows:

1. JCIDS documents with a JPD designation of JROC Interest shall be approved and validated by the JROC. The JROC may delegate approval authority for non- KPP changes to the Marine Corps. JROC review of "JROC Interest" CDDs and CPDs is required any time a recommendation is made to change a KPP. Marine Corps programs designated JROC Interest shall be endorsed by CNO (N8) and shall be reviewed by the Assistant CMC (ACMC), VCNO, and CNO; shall be approved by the CMC when such authority is delegated by the JROC.

2. JCIDS documents with a JPD of Joint Integration, Joint Information, or Independent shall be endorsed by CNO (N8) and shall be forwarded to CMC (DC,CD&I) for final approval and validation processing. Approval and validation of Marine Corps ICDs and CDD/CPDs designated Joint Integration, Joint Information, and Independent shall be accomplished by ACMC.

2.1.2.3 Weapon and Information Technology Systems Capabilities Development and Processing Procedures

The CBA serves as the core input for an ICD. The Gate 1 review of enclosure (2), paragraph 2.11.4.1.1.1, will grant authority for a DON-initiated ICD to be submitted for Joint review per references (b) and (c). Gate 1 will also validate proposed Analysis of Alternatives (AoA) Guidance and authorize a program to proceed to Concept Decision (CD). The Milestone Decision Authority (MDA) may approve entry into the DoD acquisition process at CD or may approve proceeding directly to a Milestone A, B, C, or a Full-Rate Production Decision Review (FRP DR). This decision will be based on the results of an AoA, technology development strategy, acquisition strategy, and compliance with all statutory and regulatory requirements for entry at the appropriate milestone or decision review.

A JCD or an ICD shall be approved prior to a CD. An ICD is required to support the Concept Refinement phase of the acquisition system, including the AoA, the technology development strategy, and the subsequent Milestone A acquisition decision. When a program enters the acquisition system at a point other than CD, an ICD will be generated per reference (b). The Gate 2 review of enclosure (2), paragraph 2.11.4.1.1.2, will occur after completion of the AoA and prior to a program submitting Milestone A documentation. The Gate 2 review will: (a) review AoA assumptions, analysis, cost estimates, conclusions, and recommendations; (b) approve Service's preferred alternatives resulting from the AoA analysis; (c) provide approval to develop a CDD and Concept of Operations (CONOPS) with guidance and assumptions, consistent with the preferred alternatives; and (d) authorize a program to proceed to the next event (i.e., to Gate 3 or to Milestone A).

An approved CDD or CPD are required before initiating an ACAT program and a Program/Resource Sponsor Requirements Memorandum is required before initiating an AAP. While CDDs and CPDs are normally linked to one or more ICDs, and all ACAT I programs must be linked to one or more ICDs, an ICD is not specifically required for program initiation. Per references (b) and (c), an ICD recommends potential solutions to defined capability gaps, but an ICD is not program specific. Programs initiated at Milestone A or B require a CDD. Programs initiated at Milestone C (or later) require a CPD. Normally program initiation will occur at Milestone B, but may occur at the start of Technology Development, Milestone A, for shipbuilding programs. For shipbuilding programs not started at Milestone A,

the CDD will be approved prior to the start of functional design. See references (b) and (c) for additional guidance on ICDs, CDDs, and CPDs. The Gate 3 review of enclosure (2), paragraph 2.11.4.1.1.3, will: (a) grant authority for a DON-initiated CDD to be submitted for Joint review per references (b) and (c); (b) approve CONOPS, that will include a description of capability employment, sustainment, basing, training, and manning to support life-cycle cost estimates; (c) validate that the System Design Specification (SDS) Development Plan addresses all required areas and serve as the input for follow-on Pass 2 Gates; and (d) review program health for satisfactory cost, risks, and budget adequacy. Gate 3 will grant approval to continue with Milestone A or Milestone B preparations.

Capabilities needs may be evolutionary in nature and become more refined as a result of AoA and test program updates as the program proceeds. The AoA plan shall specify the use of a CNO (N8) or CMC (DC,CD&I) accredited campaign analysis model, if required, per reference (f). The program sponsor shall apply the results of the AoA to identify performance parameters and potential system(s) that would satisfy the need. The ICD and its subsequent AoA shall provide the general framework for the derivation of the CDD/CPD performance parameters. Cost as an Independent Variable (CAIV) concept shall be considered in tradeoff analyses when conducting AoA. The CDD/CPD shall delineate performance parameters and critical systems characteristics, in terms of thresholds and objectives.

The CDDs/CPDs must be validated and approved per reference (b) before each Milestone B and Milestone C decision, respectively. Changes to these documents will be validated and approved based on the type of change, program ACAT level, and JPD. Capabilities document changes will be developed and managed by CNO program sponsors/CMC (DC,CD&I). Approval and validation of these changes to Navy programs shall be coordinated with CNO (N8) via the R3B. Program/Resource Sponsors shall not generate or use Requirements Memoranda or Letters to change an approved JCIDS document.

Force protection and survivability parameters shall be KPPs for "covered systems" including manned systems or any equipment intended to enhance personnel survivability that are expected to be deployed in an asymmetric threat environment per JROC memorandum 120-05 of 13 June 2005 and Under Secretary of Defense (Acquisition, Technology and Logistics)(USD(AT&L)) memorandum of 13 December 2005. Force protection attributes are those that contribute to protection of personnel. Survivability attributes are those that contribute to survivability of manned

systems. Force protection and survivability KPPs do not apply to systems that entered Low-Rate Initial Production (LRIP) prior to 28 October 2004. Materiel Availability shall be a mandatory supportability KPP and Materiel Reliability and Ownership Cost shall be mandatory KSAs per reference (b). Manpower may be a KPP for selected systems. For Navy programs the determination will be jointly made by the program sponsor and the Manpower Sponsor (CNO (N1)). Program sponsors should assume a default consideration for a manpower KPP unless they obtain prior agreement with the CNO (N1) Sponsor. Sponsors will submit unresolved KPP issues to the R3B for resolution. For Marine Corps programs, the determination will be made by CMC (DC,CD&I), in consultation with the affected Headquarters Marine Corps (HQMC) and CNO staff elements as appropriate. Unresolved Marine Corps KPP issues will be presented to the Marine Corps Requirements Oversight Council (MROC) for resolution.

In addition to KPPs, resource sponsors shall identify and include KSAs in all CDDs and CPDs. ICDs shall identify notional KSAs being considered for the warfighting capability gap being identified. KSAs shall have a threshold and objective value, and shall be supported by analysis for the setting of those values. KSAs are those attributes considered most critical or essential to the development of an effective military capability, but not selected as a KPP. KSAs provide senior Navy leadership an additional level of cost, schedule and performance insight and prioritization below the KPP, and require R3B/VCNO/CNO visibility and approval for changes to threshold or objective values. KSAs are of lesser importance than KPPs. KSAs shall be listed in the performance section of the Acquisition Program Baseline (APB) for the MDA to monitor; however, failure to satisfy a KSA should not be used by the MDA as sole justification to cancel a program. The MDA should consult with the Program/Resource Sponsor to determine the importance of a specific KSA in this situation, and use that input to determine if a program should continue.

Manpower requirements and human performance are key considerations in affordability determinations. Manpower thresholds and objectives shall be established so as to encourage options that maximize the use of technology in reducing Manpower, Personnel, and Training (MPT) requirements and total ownership costs. Personnel inventory shortfalls (i.e., unique skills sets) or manpower requirements that may impact end strength, shall be identified as early as possible in the capabilities development process using the systems engineering process as described in enclosure (7). Human performance is a key element of system performance and shall be included as a measure of system performance to ensure that systems perform as intended. As such,

human performance thresholds and objectives shall be considered during (1) concept refinement and (2) technology development, and included during (3) system development and demonstration and (4) production and deployment phases. DOTMLPF analyses, conducted as the first step in the Functional Solutions Analysis, shall address all eight Human Systems Integration (HSI) domains including Environmental, Safety, and Occupational Health (ESOH). Manpower estimates for acquisition programs shall be developed using reference (k). The estimated quantity and distribution of knowledge, skill, and abilities for future personnel capabilities shall be coordinated with the projected personnel inventory.

All IT systems, including NSS, or IT services acquired, procured, or operated by DON shall comply with reference (l). CDD/CPDs for IT programs, including NSS programs, shall include clearly defined interoperability and supportability requirements and shall be staffed for review of the Net-Ready (NR) KPP per reference (l). Program and resource sponsors shall use the current FORCEnet Consolidated Compliance Checklist (FCCC) to determine the Net-Centric Operations/Warfare (NCOW) and other applicable requirements for both tactical (warfighting) and non-tactical (business/support) IT systems, including NSS. The FCCC shall be validated, maintained, and updated by Deputy CNO (Communication Networks) (CNO (N6)), and is available in the CNO (N6/N7) FORCEnet Compliance Policy memorandum of 27 May 2005. CNO (N6) shall assist program and resource sponsors by reviewing all Navy JCIDS documents against the current FCCC to ensure that applicable FORCEnet/NCOW requirements are being correctly and consistently incorporated into these documents. COMSPAWARSYSCOM (FORCEnet CHENG) and NETWARCOM will use the FCCC to assess individual DON acquisition programs for FORCEnet/NCOW compliance, and shall make appropriate reports of these assessments to CFFC, CNO (N6), and ASN(RD&A). Commander, Space and Naval Warfare Systems Command (COMSPAWARSYSCOM) (FORCEnet Chief Engineer (CHENG)) and Naval Network Warfare Command (NETWARCOM), using the FCCC, shall assist PMs in assessing and achieving FORCEnet/NCOW compliance for their programs and shall report results of these assessments as necessary. Interoperability and supportability certifications by the Joint Staff (J-6) are required for JROC Interest and Joint Integration CDDs and CPDs for IT, including NSS, acquisition programs prior to Milestones B and C, respectively. Interoperability and Command, Control, Communications, Computers, and Intelligence (C4I) supportability certifications by J-6 are also required for such programs prior to the FRP DR. The Defense Information Systems Agency (DISA) (Joint Interoperability Test Command (JITC)) provides a joint system interoperability test certification to J-6 for the interoperability certification required prior to the FRP DR.

2.1.2.4 Fleet Modernization Program

The Fleet Modernization Program (FMP) has been significantly modified by the Ship Maintenance (SHIPMAIN) Modernization Entitled Process for surface ships and aircraft carriers. Type Commander (TYCOM) representatives shall review JCIDS documents and relevant acquisition program documentation for ship modernization decision purposes and shall ensure the SHIPMAIN approvals are consistent with JCIDS documentation.

The SHIPMAIN process shall not infringe upon the MDA's, Program Executive Officer's (PEO's), Direct Reporting Program Manager's (DRPM's), and Program Manager's (PM's) authority and responsibility to execute their program and make programmatic decisions.

2.1.2.5 FORCEnet

FORCEnet is the Navy and Marine Corps initiative to achieve NCOW and Joint Transformation by providing robust information sharing and collaboration capabilities across the Naval/Joint force. FORCEnet requirements apply to new start and legacy IT systems, including NSS, that exchange information with external systems. Legacy systems shall be considered for retrofit if sufficient time remains in their life-cycle to warrant funding as determined by the program and resource sponsor. The retrofit decision shall be based on: (1) an assessment that considers the remaining life of the system, (2) the system's importance to future net-centric joint and multinational operations, (3) the level of maturity/compliance with the FORCEnet integrated architecture and FCCC (Navy) and Marine Corps Systems Command (MARCORSYSCOM) C4I Integration and Interoperability Management Plan criteria, and (4) the feasibility and cost of compliance-related modifications. Additional information, including source documents, may be obtained from the CNO (N6/N7) FORCEnet Compliance Policy memorandum of 27 May 2005.

2.2 Acquisition Management Process

2.2.1 General Purpose

This enclosure describes a model for managing all DON weapon system and IT system acquisition programs. The management model acknowledges that every acquisition program is different and the PM and the MDA shall structure the program to ensure a logical progression through acquisition phases defined in

references (m) and (n).

For purposes of this instruction, a "weapon system" is a system that can be used by the Armed Forces to carry out a combat mission, including a host platform (e.g., ship or aircraft), missile, weapon, munitions, training system, combat system, subsystem(s), component(s), equipment(s), associated software, or principal items that may be acquired collectively or individually and are of such importance that management techniques require centralized, individual item management.

For purposes of this instruction, an "IT system" is any system that is an interconnected system or subsystem of equipment, that is used in the automatic acquisition, storage, manipulation, management, movement, control, display, switching, interchange, transmission, or reception of data or information, including computers, ancillary equipment, software, firmware and similar procedures, services (including support services), related resources, Automated Information Systems (AIS) and IT systems such as electronic commerce/electronic data interchange, non-tactical networks, messaging systems, base level infrastructure, etc.

2.2.2 Specific Application

The acquisition process defined in this instruction applies to all DON programs managed by DON organizations, including programs that are part of a specified System of Systems (SoS) or a Family of Systems (FoS) as defined in references (b) and (c) and also activities operating on a reimbursable, non-appropriated, or cost-recovery basis. IT programs funded by direct citation of funds from one or more Foreign Military Sales case(s) are exempt.

Acquisition of electronic publishing, printing, and micropublishing equipment and services, which are subject to the Congressional Joint Committee on Printing notification requirement, shall be managed concurrently under both this instruction and reference (o). Acquisition of visual information productions and equipment is prohibited except as authorized in reference (p).

2.3 Overview of the Acquisition Management Process

ASN(RD&A) is the DON Component Acquisition Executive (CAE) and is responsible for all DON research, development, and acquisition. USD(AT&L) is the MDA for ACAT ID acquisition programs and Assistant Secretary of Defense (Networks and

Information Integration) (ASD(NII)) is the MDA for ACAT IAM acquisition programs. ASN(RD&A) is the MDA for ACAT IC, IAC, and II acquisition programs. For ACAT III, IV, and AAPs, ASN(RD&A) delegates MDA and Program Decision Authority (PDA) to PEOs, Commanders of Systems Commands (SYSCOM Commanders), and DRPMs. ASN(RD&A)-designated PEOs, SYSCOM Commanders, DRPMs, and other designees are responsible for executive management of assigned acquisition programs and will assign PMs to execute acquisition programs per approved cost, schedule, and performance thresholds.

The MDA shall conduct milestone reviews for all DON assigned ACAT programs. Prior to, or at program initiation, the PM shall propose appropriate program decision points to the MDA, advise of mandatory program information to be presented at proposed decision points, and provide any discretionary program information considered essential for MDA decision-making. Based on technology maturity and acquisition strategy, a program may enter the acquisition process at any decision point. See paragraph 2.5 of this enclosure for information on tailoring of program information content. Prior to each subsequent program decision point, the PM shall provide the MDA with the opportunity to review the program information required to assess program status and support a decision for the upcoming review. Per reference (q), Integrated Product Teams (IPTs) or Acquisition Coordination Teams (ACTs) shall be established per the criteria in paragraphs 2.3.1 and 2.3.2 by the PM, or designated official if a PM has not been assigned, or the MDA, respectively. An IPT supports the PM in program execution and the ACT is an advisory body to the MDA.

2.3.1 Integrated Product Teams (IPTs)

IPTs are an integral part of the defense acquisition process used to maintain continuous and effective communications and to execute programs. IPTs may address issues regarding requirements/capabilities needs, acquisition strategy and execution, financial management, milestone and decision review preparation, etc. MDAs and PMs are responsible for making decisions and leading execution of their programs through IPTs. The PM shall structure, tailor, and lead IPTs to resolve issues, provide assessments, and execute programs at the lowest level. IPTs may be established to address issues and needs in a specific functional/topic/product area, such as cost/performance, design, test, or contracting, or to address integration of all program functions/products. IPTs may utilize working level staff, managers at various levels, and program support personnel. Members are selected based on their knowledge and/or responsibility in the designated focus area(s). See reference

(n), paragraphs E1.2 and E1.20, for IPT implementation requirements for DON ACAT programs. There are generally two levels of IPTs: Overarching IPTs (OIPTs) and Working IPTs (WIPTs).

2.3.1.1 Overarching Integrated Product Teams (OIPTs)

OIPTs are established by the MDA for ACAT ID and IAM programs to evaluate the overall program prior to a milestone or formal Program Review (PR), to address issues that may impact milestone or PR decisions, and to facilitate program communications among major stakeholders as required by reference (m), paragraph 3.10.4.

2.3.1.2 Working Integrated Product Teams (WIPTs)

WIPTs are formed to address issues and needs in a specific functional/topic area or to address integration of all program functions/products. WIPTS may utilize working level staff, managers at various levels, and program support personnel.

Functional WIPTs generally focus on a particular function/topic such as cost/performance, design, test, ESOH, or contracting. Members are selected based on their knowledge and/or responsibility in the designated focus area.

2.3.2 Acquisition Coordination Teams (ACTs)

The ACT is a team of stakeholders from the acquisition community who represent the principal advisors to the MDA. An ACT shall be established for each DON ACAT IC, IAC and II program. For ACAT ID and IAM programs, an ACT is not required since a similar function is performed by the OIPT.

ACTs are co-chaired by the cognizant Deputy Assistant Secretary of the Navy (DASN) or DASN action officer and the PM (or a PM’s representative). Prior to the assignment of a PM, the ACT shall be co-chaired by an appropriate program sponsor (or a program sponsor’s representative).

ACT members shall be empowered and authorized by the executing commands to make commitments for the organizations they represent, and are responsible for keeping their principals appraised of the program status. The ACT does not replace the PM’s IPT and it shall neither abrogate the responsibility of the PM nor delay or prevent unresolved issues from being raised to the MDA.

2.4 Categories of Acquisition Programs and Milestone Decision Authorities

An ACAT designation shall be assigned per this enclosure after approval of a capabilities document establishing the need for a new program. While a proposed ACAT designation shall be provided on the cover of the ICD and the proposed CDD, the cognizant PEO/SYSCOM/DRPM/PM, or designee, shall request an ACAT designation or designation change as appropriate. ACAT designations shall be forwarded as soon as they are approved to ASN(RD&A) Acquisition Programmatics and Analysis (APA) for input into the ASN(RD&A) Acquisition Program listing. An approved ACAT designation does not mean that the program has entered the acquisition process. A program should enter the acquisition process at a decision point. The MDA normally approves program initiation at Milestone B.

Reference (m), enclosure 2, and Table E2T1 of this enclosure, provide the description, dollar thresholds, and the decision authority for ACAT I-IV acquisition programs and AAPs. The category of an acquisition program shall generally be determined based upon an assessment of cost, complexity, and risk. Potential ACAT programs are not to be artificially divided into separate entities for the purpose of qualifying as lower ACAT categories, or as AAPs.

For ACAT programs that are also joint programs, see enclosure (9) for implementation requirements.

ASN(RD&A) shall resolve any question of classification of a program below the ACAT I or IA level, or potential program, as a weapon system or IT system acquisition program.

Once a program has delivered greater than 90 per cent of its total quantity or expended greater than 90 per cent of total program cost (Research, Development, Test, and Evaluation (RDT&E) and procurement as defined in the APB), the PM should request from the Office of the Assistant Secretary of the Navy (RD&A) APA that the program be removed from the ASN(RD&A) ACAT listing.

2.4.1 ACAT I (Major Defense Acquisition Program (MDAP))

USD(AT&L) designates MDAPs as ACAT ID or ACAT IC. The USD(AT&L) is the MDA for ACAT ID (Defense Acquisition Board) programs. ASN(RD&A) is the MDA for DON ACAT IC (Component) programs. See reference (m), enclosure 2, for implementation requirements for DON ACAT I programs.

2.4.2 ACAT IA (Major Automated Information System (MAIS))

ASD(NII) designates MAIS programs as ACAT IAM or ACAT IAC and is the MDA for ACAT IAM programs. The ASN(RD&A) is the MDA for DON ACAT IAC programs unless this authority is specifically delegated. See reference (m), enclosure 2, for implementation requirements for DON ACAT IA programs.

2.4.3 ACAT II

ACAT II programs are major system programs that do not meet the criteria for an ACAT I program. ASN(RD&A) shall designate ACAT II programs and shall serve as MDA for such programs unless this authority is specifically delegated. By definition, there are no IT ACAT II programs. See reference (m), enclosure 2, for implementation requirements for DON ACAT II programs.

2.4.4 ACAT III

PEOs, SYSCOM Commanders, and DRPMs shall designate ACAT III programs and may delegate MDA authority for such programs to a designated flag officer or Senior Executive Service (SES) official or position. ASN(RD&A) APA shall be notified of all ACAT III program designations for entry into the ASN(RD&A) Acquisition Program listing.

2.4.5 ACAT IV

There are two categories of ACAT IV programs. ACAT IVT (Test) programs require Operational Test and Evaluation (OT&E), while ACAT IVM (Monitor) programs do not. Commander, Operational Test and Evaluation Force (COMOPTEVFOR) or Director, Marine Corps Operational Test and Evaluation Activity (Director, MCOTEA) may elect to monitor ACAT IVM programs.

PEOs, SYSCOM Commanders, and DRPMs shall designate ACAT IV programs and may delegate MDA authority for such programs to a designated flag officer, SES official, or to the PM. The Operational Test Agency (OTA) (COMOPTEVFOR or Director, MCOTEA) shall concur in writing with all ACAT IVM designations. All Navy disputes concerning ACAT IV designations shall be arbitrated by the Director of Test and Evaluation and Technology Requirements (CNO (N091)) through the Test and Evaluation Coordination Group (TECG) process per paragraph 5.4.4 in enclosure (5) of this instruction. All Marine Corps disputes concerning ACAT IV designations shall be resolved by ACMC.

The office of ASN(RD&A) APA shall be notified of all ACAT IV program designations for entry into the ASN(RD&A) Acquisition Program listing.

2.4.6 Abbreviated Acquisition Programs (AAPs)

Small DON acquisitions and modifications may be designated an AAP if they do not require OT&E and they meet dollar threshold and other criteria in Table E2T1 below. The OTA must concur in writing that OT&E is not required.

The office of ASN(RD&A)(APA) shall be notified of all AAP designations for entry into the ASN(RD&A) Acquisition Program listing.

2.4.6.1 Weapon System and Information Technology (IT) System AAP Procedures

Potential ACAT programs shall not be artificially divided into separate entities for the purpose of having the entities qualify as separate AAPs. PEOs, SYSCOM Commanders, DRPMs, and flag officers or SES designees are assigned PDA and designation authority for their AAP weapon system and IT system programs. PDA may be delegated to the PM. Prior to final approval of an AAP designation, the OTA (COMOPTEVFOR or Director, MCOTEA) shall concur in writing that OT&E is not required. The CNO (N091) will arbitrate disputes concerning the need for OT&E per the TECG process. In addition, ASN(RD&A) or designated MDA may elect to treat any program meeting the AAP criteria listed in Table E2T1 as an ACAT program if circumstances warrant, such as joint service involvement or high risk, or if greater visibility is justified.

Designated PEOs, SYSCOM Commanders, and DRPMs shall be responsible for developing AAP policies and procedures for assignment of PDA, conducting program reviews (PRs), and reporting and tracking program status. The PDA shall document all major program decisions. Only ASN(RD&A) shall assign PDA to organizations other than SYSCOM Commanders, PEOs, and DRPMs.

AAPs shall not be initiated without funding and a written requirement. As a minimum, requirements or capabilities shall be documented by a sponsor and approved at the appropriate level (e.g., CNO (program or resource sponsor)/CMC (DC,CD&I)). Program and resource sponsors shall use reference (l) and the FCCC as a guide to determine the net-centric performance requirements for IT systems, including NSS, being acquired by an AAP.

The PM for AAPs shall conduct a tailored MPT analysis; develop a plan for test and evaluation; conduct a tailored analysis of the system's ability to operate in the intended electromagnetic environment (per Military Standard 464 (MIL-STD-464)); establish a system safety program tailored (per MIL-STD-882) to identify ESOH hazards; complete Clinger-Cohen Act (CCA) compliance and information assurance strategy for IT systems, including NSS; complete IT registration for Mission-Critical (MC) and Mission-Essential (ME) IT systems, including NSS; and provide any other statutory or program information required by the PDA. The PM shall comply with the DoD PPBES and configuration management requirements and reporting procedures.

2.4.7 Program Modifications

Table E2T2 and paragraph 2.5.5 of this enclosure provide guidance for implementation and documentation of weapon system and IT system modifications.

Table E2T1 Description and Decision Authority for ACAT I-IV and AAP Programs

Acquisition Category	Criteria for ACAT or AAP Designation	Decision Authority

ACAT I	• Major Defense Acquisition Programs (MDAPs) (10 U.S.C. Section 2430)
	  • RDT&E total expenditure > $365 million in Fiscal Year (FY) 2000 constant dollars, or
	  • Procurement total expenditure > $2.190 billion in FY 2000 constant dollars, or
	• MDA designation as special interest
		ACAT ID: USD(AT&L)
		ACAT IC: SECNAV, or if delegated, ASN(RD&A) as the CAE (not further delegable)

ACAT IA	• Major Automated Information Systems (MAISs)
	  • Program costs/year (all appropriations) > $32 million in FY 2000 constant dollars, or
	  • Total program costs > $126 million in FY 2000 const. dollars, or
	  • Total life-cycle costs > $378 million in FY 2000 constant dollars
	• MDA designation as special interest
		ACAT IAM: ASD(NII)/DoD CIO
		ACAT IAC: SECNAV, or if delegated, ASN(RD&A), as the CAE (not further delegable)

ACAT II	• Does not meet the criteria for ACAT I
	• Major Systems (10 U.S.C. Section 2302(5))
	  • RDT&E total expenditure > $140 million in FY 2000 constant dollars, or
	  • Procurement total expenditure > $660 million in FY 2000 constant dollars, or
	• ASN(RD&A) designation as special interest
	• Not applicable to IT system programs
		ASN(RD&A), or the individual designated by ASN(RD&A)

ACAT III	• Does not meet the criteria for ACAT II or above
	• Weapon system programs:
	  • RDT&E total expenditure ≤ $140 million in FY 2000 constant dollars, or
	  • Procurement total expenditure ≤ $660 million in FY 2000 constant dollars, and
	  • Affects mission characteristics of ships or aircraft or combat capability
	• IT system programs:
	  • Program costs/year ≥ $15 million ≤ $32 million in FY 2000 constant dollars, or
	  • Total program costs ≥ $30 million ≤ $126 million in FY 2000 constant dollars, or
	  • Total life-cycle costs ≤ $378 million in FY 2000 constant dollars
		Cognizant PEO, SYSCOM Commander, DRPM, or designated flag officer or SES official.
		
		ASN(RD&A), or designee, for programs not assigned to a PEO, SYSCOM, or DRPM.

ACAT IVT	• Does not meet the criteria for ACAT III or above
	• Requires operational test and evaluation
	• Weapon system programs:
	  • RDT&E total expenditure ≤ $140 million in FY 2000 constant dollars, or
	  • Procurement total expenditure ≤ $660 million in FY 2000 constant dollars
	• IT system programs:
	  • Program costs/year < $15 million, or
	  • Total program costs < $30 million, or
	  • Total life-cycle costs ≤ $378 million in FY 2000 constant dollars
		Cognizant PEO, SYSCOM Commander, DRPM, or designated flag officer, SES official, or PM.
		
		ASN(RD&A), or designee, for programs not assigned to a PEO, SYSCOM, or DRPM.

Table E2T1 Description and Decision Authority for ACAT I-IV and AAP Programs (cont'd)		

ACAT IVM	• Does not meet the criteria for ACAT III or above
	• Does not require operational test and evaluation as concurred with by OTA
	• Weapon system programs:
	  • RDT&E total expenditure ≥ $10 million ≤ $140 million in FY 2000 constant dollars, or
	  • Procurement expenditure ≥ $25 million/year, ≥ $50 million total ≤ $660 million total in FY 2000 constant dollars
	• Not applicable to IT system programs
		Cognizant PEO, SYSCOM Commander, DRPM, or designated flag officer, SES official, or PM.
		
		ASN(RD&A), or designee, for programs not assigned to a PEO, SYSCOM, or DRPM.

Abbreviated Acquisition Program	• Does not meet the criteria for ACAT IV or above
	• Does not require operational test and evaluation as concurred with in writing by OTA
	• Weapon system programs:
	  • Development total expenditure < $10 million, and
	  • Production or services expenditure < $25 million/year, < $50 million total
	• IT system programs:
	  • Program costs/year < $15 million, and
	  • Total program costs < $30 million
		Cognizant PEO, SYSCOM Commander, DRPM, or designated flag officer, SES official, or PM.
		
		ASN(RD&A), or designee, for programs not assigned to a PEO, SYSCOM, or DRPM.

2.5 Capabilities Concept Development and Program Decision Points and Phases

2.5.1 User Needs and Technology Opportunities

Mission needs identify deficiencies in current operational capabilities. ICDs are baseline documents for FoSs and prescribe FoS capabilities per references (b) and (c). Additionally, ICDs and CDDs are baseline documents for SoSs and prescribe SoS capabilities per references (b) and (c).

Naval capabilities/warfare sponsors and the Chief of Naval Research (CNR) shall identify projected deficiencies and Future Naval Capabilities (FNC) that require investment in Science and Technology (S&T) projects. The most viable S&T projects should be expeditiously demonstrated and transitioned into new and legacy systems to support the warfighter and reduce system total ownership cost. See reference (m), paragraphs 3.4 and 3.6, for implementation of technology opportunities activities during pre-systems acquisition.

In developing system requirements/capabilities needs, consideration shall be given to modifying performance requirements to permit international cooperation, either through information exchange, research and development, international agreements, foreign comparative testing, or industrial cooperation. Industrial base assurance factors shall be

considered per DON's Critical Infrastructure Protection (CIP) initiative.

If the potential solution to a newly identified need could result in new or significantly modified IT systems, including NSS, the appropriate IT FAMs listed at the DON CIO Web site (www.doncio.navy.mil) shall review the documented need to ensure compliance with appropriate mission/business area architecture and the FORCEnet integrated architecture and coordinate with principal staff assistants for joint potential. IT programs are discussed in enclosure (4) of this instruction.

See reference (m), paragraphs 3.2.1, 3.4, and 3.6.4, and reference (c) for implementation of the capabilities integration and development process.

2.5.2 Program Tailoring

All MDAs should promote maximum flexibility in tailoring programs under their oversight.

Prior to formal program initiation (normally Milestone B) and after consideration of the views of the ACT/IPT members, the PM shall propose a tailored execution, management, program information/documentation, and oversight structure for the program. The PM proposal shall consider program size, complexity, system service-life, total force structure, and associated risk. The MDA shall approve in writing a tailored execution, management, program information/documentation, presentation medium, and oversight structure. Upon approval, all deviations from the program's documented tailoring plan require MDA approval. The MDA tailoring determinations made at program initiation shall be reexamined at each program decision point in light of then-current program conditions.

Required program information for all DON ACAT programs shall be determined using the concept of "tailoring in" (versus "tailoring out") program information, i.e., there is no program information required beyond: (1) that required by statute and regulation (reference (m)); (2) this instruction, enclosure (3), Tables E3T1, E3T2, and E3T3; and (3) any additional information required by the MDA. Program information may be tailored to: (1) combine program information/documents with similar information and approval authorities; (2) establish a common reference for basic system and program information; and (3) eliminate non-applicable information.

Both MDAs and PMs should be aware that there are statutory and regulatory requirements listed in enclosure (3), Tables E3T1 and E3T2, that cannot be tailored out of a program's milestone information requirements. Failure to comply with these requirements will preclude the successful completion of applicable milestone reviews.

2.5.3 Program Decision Points Tailoring

The MDA must rigorously evaluate a program's core activities before making a program decision. The MDA shall establish tailored program decision points for each ACAT program as early as possible in the program life cycle. An ACAT program does not require a set number of program decision points.

DON new start ACAT programs shall follow the acquisition life-cycle model established by reference (m). Ongoing ACAT programs will follow the guidance provided in paragraph 3.1.1 of reference (m) and paragraph 4.3.1 of reference (n). Ongoing programs started under the pre-23 October 2000 acquisition model, but which had not yet reached Milestone II as of 12 May 2003 (the date of reference (m)), are required to convert to the acquisition model of reference (m) at the start of System Development and Demonstration (SDD), Milestone B. Ongoing programs that were started under the pre-23 October 2000 acquisition model and were past Milestone II as of 12 May 2003, may continue to Milestone III, but shall satisfy the statutory and regulatory requirements of this instruction, enclosure (3), Tables E3T1, E3T2, and E3T3 for FRP DR.

The MDA shall not approve program initiation or entry into any phase that requires milestone approval for any ACAT program that contains a MC or ME IT system, including NSS, until the DoD CIO (for ACAT IA programs) certifies or the DON CIO (for ACAT I and II programs) or the SYSCOM or organization CIO (for ACAT III and IV programs) confirms that the system is being acquired in compliance with the CCA.

See reference (m), paragraphs 3.1 through 3.10, for implementation requirements for pre-systems acquisition, systems acquisition, and sustainment of DON ACAT programs.

2.5.4 Program Decision Points and Phases

2.5.4.1 Concept Decision

At CD, the MDA approves the initiation of the Concept Refinement phase. The AoA plan approved at CD shall provide for conduct of the AoA in the context of an SoS or FoS when an SoS or FoS is applicable. Such an AoA plan shall be designed to show the value of each individual system in an SoS or FoS and its contribution to a mission capabilities package. Where appropriate, each individual system shall be analyzed using multiple concepts for that system. See reference (m), paragraph 3.5, for implementation requirements for pre-systems acquisition of potential DON ACAT programs at this decision point.

2.5.4.2 Concept Refinement

The most promising systems concepts shall be defined, in part, by broad objectives for performance and the identification of interoperability and integration requirements within a FoS or SoS. ASN(RD&A) Chief Systems Engineer (CHSENG), COMSPAWARSYSCOM (FORCEnet CHENG), and NETWARCOM shall assist the requirements officer and the PM, or designee, with the translation of these concepts into operational and systems views and the associated component advanced development.

An AoA shall be conducted to assess how alternative approaches to a proposed Navy or Marine Corps system contribute to the total mission capabilities of an SoS or an FoS. Program documentation for a program that is part of an SoS or FoS shall be developed and written in the SoS or FoS context. The requirements officer (RO) and the PM should develop a system performance matrix for the most promising alternative to support the preparation of the corresponding JCD (when required by the JROC), CDD(s), and APB(s). See reference (m), paragraph 3.5, for concept refinement implementation requirements for pre-systems acquisition.

2.5.4.3 Milestone A

Milestone A occurs at the beginning of the Technology Development phase. Milestone A is also a statutory requirement of 10 U.S.C. Section 2366b, as amended by Public Law 110-181 of 28 Jan 08 Section 943 (Fiscal Year (FY) 2008 National Defense Authorization Act), to begin the Technology Development phase for a major weapon system (pre-ACAT I and II programs) as defined by 10 U.S.C. Section 2302(5). At Milestone A, an MDA review shall

be held to evaluate the results of the AoA, technology maturity, technical risk, and international availability or potential for international cooperation; to approve the preferred system solution and technology development strategy; and to authorize entry into the Technology Development phase. See reference (m), paragraph 3.6, for implementation for pre-systems acquisition of potential DON ACAT programs at this milestone. The MDA may approve program initiation for shipbuilding programs at Milestone A, the beginning of the Technology Development phase. See reference (m), paragraph 3.6.3, for implementation requirements for shipbuilding program initiation.

2.5.4.4 Technology Development

Technology development is normally part of pre-systems acquisition effort conducted prior to program initiation. Technology to be used in the initial and subsequent increments of a program shall have been demonstrated in a relevant environment. Shipbuilding programs may be initiated at Milestone A in order to start Ship Design concurrent with sub-system/component technology development. See reference (m), paragraph 3.6, for technology development implementation requirements for pre-systems acquisition. See reference (m), paragraph 3.6.3, for implementation requirements for shipbuilding program initiation that will take place at entry to or during the Technology Development phase. The Gate 4 review of enclosure (2), paragraph 2.11.4.2.1.1, occurs during the Technology Development phase, approves the SDS, and authorizes a program to proceed to Gate 5 (Request for Proposal (RFP)) or Milestone B. The SDS may be an attachment of the SDD phase RFP. Gate 4 may be combined with Gate 5 and/or Milestone B for ACAT IC, IAC, and selected ACAT II programs as determined by the Secretary of the Navy (SECNAV) or ASN(RD&A).

2.5.4.5 Milestone B

Milestone B occurs at the beginning of the SDD phase. At Milestone B, an MDA review will be held to assess technology maturity and technical risk for entry into SDD. At Milestone B, the MDA normally approves program initiation, the LRIP strategy, and initial LRIP quantities for which LRIP will be requested at Milestone C. An evolutionary acquisition strategy is the preferred approach to satisfy time-phased CDDs; however, a single step to a full capabilities acquisition strategy may be used whether or not CDDs are time-phased. In the case of shipbuilding, lead and initial follow ships are normally approved at Milestone B. The follow ships that are approved at Milestone

B shall be sufficient quantities to maintain shipyard construction continuity until the FRP DR. Critical sub-systems such as combat systems shall be demonstrated prior to lead and follow ship installation as directed by the MDA given the level of technology maturity and the associated risk. See reference (m), paragraphs 3.7.1 and 3.7.2, for Milestone B implementation requirements for systems acquisition of DON ACAT programs.

The Gate 5 review of enclosure (2), paragraph 2.11.4.3.1.1, ensures that the Service has completed needed actions for SDD RFP release and recommends to the MDA approval of the release of the SDD RFP to industry as authorized by the Acquisition Strategy. Gate 5 review may occur before, concurrent with, or after Milestone B depending upon the chosen acquisition strategy and the related program risk. Gate 5 and Milestone B may be combined for ACAT IC, IAC, and selected ACAT II programs as determined by SECNAV or ASN(RD&A).

2.5.4.6 System Development and Demonstration (SDD)

PMs of systems within a SoS or a FoS shall coordinate with each other to provide sufficient information to ASN(RD&A) and the MDAs so that appropriate decisions can be made across platform and system domains. See reference (m), paragraph 3.7, for SDD implementation requirements for systems acquisition of DON ACAT programs.

The Gate 6 review of enclosure (2), paragraph 2.11.4.3.1.2, assesses overall program health including readiness for production, the sufficiency of the SDS, the Earned Value Management System (EVMS) Performance Measurement Baseline (PMB), and the Integrated Baseline Review (IBR) (see The Program Managers' Guide to the Integrated Baseline Review Process). Gate 6 occurs following award of the SDD contract and satisfactory completion of the IBR. Follow-on Gate 6 reviews will be conducted to endorse or approve the CPD, review program health prior to and post Milestone C and the FRP DR, and serve as forums for Configuration Steering Boards (CSBs) for ACAT I programs. A Gate 6 review conducted to endorse or approve a CPD will be chaired by CNO/CMC, or designee.

2.5.4.6.1 System Integration

ASN(RD&A) may designate selected programs for special interest. These programs may be components of a specified FoS or SoS. During the SDD phase, the ASN(RD&A) CHSENG shall assist these programs by reviewing functional designs and interface

specifications that impact system interoperability per reference (l). Assistance will be provided through the program's established IPT or ACT process.

See reference (l) and reference (m), paragraph 3.7.3, for system integration implementation requirements for systems acquisition of DON ACAT programs.

2.5.4.6.2 Design Readiness Review

The Design Readiness Review provides an opportunity at the end of the System Integration phase for assessment of design maturity. Major system integration issues have been addressed and programs are preparing for the system demonstration effort. MDAs may determine the form and content of the design readiness review. See reference (m), paragraph 3.7.4, for implementation requirements for systems acquisition of DON ACAT programs.

2.5.4.6.3 System Demonstration

This effort is intended to demonstrate the ability of the system to operate in a way consistent with approved KPPs. See reference (m), paragraph 3.7.5, for system demonstration implementation requirements for systems acquisition of DON ACAT programs. A follow-on Gate 6 review will be conducted to review program health prior to Milestone C.

2.5.4.7 Milestone C

Milestone C occurs at the completion of the SDD phase. At Milestone C, an MDA review will be held to evaluate program status, risk, and readiness to enter the Production and Deployment phase. At Milestone C, the MDA approves one of the following: (1) LRIP for those programs that require LRIP; (2) full-rate production or procurement for those programs that do not require LRIP and have completed required Initial Operational Test and Evaluation (IOT&E); or (3) limited deployment for those IT programs or software-intensive programs with no production components, but that require completion of IOT&E. For those programs that do not require LRIP and have completed required IOT&E or for shipbuilding programs where follow ships are initially approved at Milestone B, Milestone C and the FRP DR may be combined into a single program decision point as long as all of the required program information for both Milestone C and FRP DR are satisfied. See reference (m), paragraphs 3.8.1, 3.8.2, and 3.8.3, for Milestone C and LRIP implementation requirements for systems acquisition of DON ACAT programs. The Program

Decision Meeting (PDM) for Milestone C will follow the requirements of reference (q).

2.5.4.8 Production and Deployment

The purpose of this phase is to achieve operational capabilities that satisfy mission needs. See reference (m), paragraph 3.8, for production and deployment implementation requirements for systems acquisition of DON ACAT programs.

2.5.4.8.1 Low-Rate Initial Production (LRIP)

The MDA shall initially justify and approve the LRIP quantities for all ACAT I, II, III, and IV programs as part of the Milestone B acquisition strategy and Acquisition Decision Memorandum (ADM). With MDA approval, LRIP quantities may be adjusted to meet program requirements. The LRIP quantity shall not be less than one complete unit. Further LRIP restrictions on ACAT programs are contained in reference (m), paragraph 3.8.3. See references (m) and (q) for specific ADM requirements for LRIP justification, cumulative LRIP quantities, and the percent of the total inventory objective that the cumulative LRIP quantities represent. LRIP procurement of greater than 10 per cent of a program's inventory objective shall be justified in the ADM, acquisition strategy, and Selected Acquisition Report (SAR) (for ACAT I programs). Follow-on Gate 6 reviews will be conducted to review program health post Milestone C and prior to FRP DR.

2.5.4.8.2 Full-Rate Production Decision Review (FRP DR)

An FRP DR is conducted prior to a program entering into full-rate production and deployment. At the FRP DR, the MDA shall evaluate program status, risk, and readiness to enter full-rate production/procurement and deployment, or to authorize deployment for IT programs or software-intensive programs after completion of IOT&E. In the case of shipbuilding programs, the FRP DR shall be held to provide the MDA the results of the completion of IOT&E, authorize the construction of the remaining follow ships, and satisfy the requirements of this instruction, enclosure (3). See reference (m), paragraph 3.8.4, for FRP DR implementation requirements for systems acquisition of DON ACAT programs. See this instruction, enclosure (2), paragraph 2.5.4.7, for those cases where Milestone C and FRP DR are combined. The PDM for FRP DR will follow the requirements of reference (q). Follow-on Gate 6 reviews will be conducted to review program health post FRP DR.

2.5.4.8.3 FRP and Deployment

See reference (m), paragraph 3.8.5, for production and deployment implementation requirements for systems acquisition of DON ACAT programs.

2.5.4.9 Operations and Support

2.5.4.9.1 Sustainment

Support concepts shall satisfy the program sponsor's specified requirements for sustaining support performance at the lowest possible life-cycle cost. Acquisition planning documents shall identify the plans, resources, and metrics that will be used to execute and measure the following four mandatory logistics support concepts for each evolutionary increment of capabilities to be delivered:

1. Minimal total life-cycle (ownership) cost to own and operate;

2. Maintenance concepts that optimize both organic and industry sources;

3. Availability of support to meet warfighter-specified levels of sustained war and peacetime material readiness; and

4. Logistics support that sustains and continuously improves both short and long-term material readiness.

See reference (m), paragraph 3.9.2, for sustainment requirements for DON ACAT programs.

2.5.4.9.1.1 Sustainment Support

PMs are responsible for Total Life Cycle Systems Management (TLCSM) to sustain and continuously improve system long-term material readiness, increase reliability, and reduce the logistics footprint. PMs shall develop and implement Performance Based Logistics (PBL) strategies as described in references (n) and (r) and expanded upon in reference (s) unless otherwise supported by a business case analysis.

2.5.4.9.2 Disposal

Disposal planning occurs at the earliest possible stage in a system's life-cycle and shall consider the cost and risk of

hazardous materials management and disposal. Systems shall be designed for safe, low cost disassembly.

2.5.5 Modifications

For the purpose of this instruction, the term "modification" means any configuration change to a produced configuration item regardless of cost or test requirements, e.g., engineering change proposals, pre-planned product improvements, upgrades, or technology enhancements.

A modification to any active ACAT program (i.e., any ACAT program that has not realized 90 per cent of total deliveries or has not expended 90 per cent of its total program cost), where the modification causes the program to breach an existing APB threshold, shall result in a revision to the APB and any other program information, as needed, per paragraph 3.9.2. If the modification causes a threshold breach of an active ACAT I program's APB program acquisition unit cost (PAUC) or average procurement unit cost (APUC) of at least 15 per cent over the currently approved APB objective, or of at least 30 per cent over the original APB objective, the PM shall ensure compliance with Congressional unit cost reporting requirements per 10 U.S.C. Section 2433 (see this instruction, paragraph 3.9.5, and Defense Acquisition Guidebook, paragraph 10.9.3.2., for unit cost threshold breach reporting guidance).

Modifications will normally be considered part of the modified ACAT program, but may be managed as a separate program at the discretion of the MDA. Any identified new functionality or capability must be identified in an approved capabilities document. Modifications to programs that are not ACAT programs shall be evaluated using Table E2T2 to determine whether an ACAT designation is necessary.

If the modification causes the program information to be changed, that information shall be revised and approved by the proper authority. Additionally, if the modification causes a change in ACAT level for the ongoing program, an ACAT designation change request shall be submitted for approval. See reference (m), paragraph 3.9.2.6, for implementation requirements for evolutionary sustainment of DON ACAT programs. PMs of programs that are part of a SoS or FoS shall assess the impact, including electromagnetic compatibility, of their respective system modifications on other systems within the SoS or FoS, and advise the affected MDAs, PEOs, and PMs.

A modification to a program or system that is no longer an active ACAT program (i.e., a program that has achieved at least 90 per cent of total deliveries or has expended 90 per cent of total cost) should be treated as a separate program with its own assigned ACAT or AAP designation.

See the "Modification Process" Table E2T2 below for appropriate actions by the PM, CNO/CMC, and the MDA. Actions are based on criteria shown in the top row of Table E2T2.

Table E2T2 Modification Initiation Process Conditions
(The answers to the questions in columns 1 through 4 will determine the row that most closely relates to your ongoing program characteristics and proposed modification)

Pgm being modified is an active ACAT?	Mod breaches APB threshold?	Mod requires additional funding?[7/]	Mod cost exceeds "Abbreviated Acqn Program" $criteria[4,5/]	PM action	CNO/CMC action[6/]	Program Decision Authority or MDA action
YES	NO	NO	YES [5/] or NO	Execute mod	Approve/validate CDD/CPD [2,5/]	None
YES	NO	YES	YES [5/] or NO	Prepare funding request Execute mod	Approve/validate CDD/CPD [2,5/] or requirement Provide funding	None
YES	YES	NO	YES [5/] or NO	Revise APB [1/] Revise TEMP [2/] Execute mod	Approve/validate CDD/CPD [2,5/] or requirement Endorse APB [1/] Endorse TEMP [2/]	Approve APB [1/] Approve TEMP [2/]
YES	YES	YES	YES [5/] or NO	Prepare funding request Revise APB [1/] Revise TEMP [2/] Execute mod	Approve/validate CDD/CPD [2,5/] or requirement Provide funding Endorse APB [1/] Endorse TEMP [2/]	Approve APB [1/] Approve TEMP [2/]
NO	N/A	NO	NO	Prepare/submit AAP designation request to approval authority Execute mod	Approve requirement	Approve AAP designation request
NO	N/A	YES	NO	Prepare/submit AAP designation request to approval authority Prepare funding request Execute mod	Approve requirement Provide funding	Approve AAP designation request
NO	N/A	YES	YES	Prepare funding request Prepare APB [1/] Prepare TEMP [2/] Prepare ACAT [3/] desig request Execute mod	Approve/validate CDD/CPD [2/] Provide funding Endorse APB [1/] Endorse TEMP [2/]	Approve APB [1/] Approve TEMP [2/] Approve ACAT [3/] designation request

1/ "Prepare APB" is for the "modification only" if the modification is to be managed as a separate program. "Revise APB" is for the original ongoing program. See APB format in Consolidated Acquisition Reporting System (CARS) section of the Defense Acquisition Guidebook.
2/ If a new, or change to an existing, CDD/CPD or TEMP is required, see formats for CDD/CPD and TEMP in reference (c) and Defense Acquisition Guidebook, respectively.
3/ "Prepare ACAT designation request" is for the "modification only", unless the original program is still ongoing (i.e., in production), in
which case the ACAT designation request shall encompass both the original program and the modification(s). See the ACAT designation request and ACAT designation change request content memorandum in the DON Acquisition and Capabilities Guidebook.
4/ $ criteria for "Abbreviated Acquisition Programs" is less than: for weapon system programs, $10M total development expenditure, $25M production or services expenditure in any fiscal year, and $50M total production or services expenditure for all fiscal years; for IT programs, $15M program costs in any single year and $30M total program costs.
5/ If answer to column 4 is YES, an approved CDD/CPD or CDD/CPD revision is required.
6/ For IT programs, endorsement is provided by the IT functional area manager, approval is provided by the resource sponsor.
7/ For modifications that require additional funding, see ASN(RD&A) memorandum, Acquisition Program Cost Growth; Management of Engineering Change Proposals, of 4 December 2006

2.6 Review of the Legality of Weapons Under International Law and Review for Compliance with Arms Control Agreements

2.6.1 Review of the Legality of Weapons Under International Law

All potential weapons and weapons systems acquired or developed by DON shall be reviewed by the Judge Advocate General (JAG) of the Navy during the program decision process described in reference (q) to ensure that the intended use of such weapons or systems is consistent with domestic and international law.

1. PMs shall ensure that:

a. All potential weapons or weapon systems are reviewed by JAG before the award of the SDD contract and again before the award of the initial production contract. No weapon or weapon system may be acquired or fielded without a legal review. The following Law of Armed Conflict (LOAC) issues must be addressed when any weapon or weapon system is being reviewed: (1) whether the system causes unnecessary suffering that is disproportionate to the military advantage reasonably expected to be gained from its use; (2) whether the system may be controlled in such a manner that it is capable of being directed against a lawful target (i.e., it is not indiscriminate in its effect); and (3) whether there is a specific rule of law or treaty prohibiting the use of the system. To provide the information required to address these LOAC issues, the command requesting the initiation of the legal review shall prepare and forwarded to Navy Office of JAG Code 10 (International and Operational Law) a memorandum containing the following in commonly understood language:

(1) A complete description of the weapon or weapon system to include: a list of all its parts, how it functions, what it does, the manning level required for its use, and whether it is self-propelled, mounted or attached to a platform, or portable.

(2) The concept or method of employment planned for the use of the weapon or weapon system. This should include detailed information from the final approved concept of operation or method of employment that describes exactly how the system will be used.

(3) Information regarding the ability of the weapon and/or weapon system to be directed at a specific target (accuracy), including a comparison of the accuracy of the new

weapon or weapon system to similar weapons or weapons systems (or munition) that have already been acquired or developed and have received a legal review.

(4) Information regarding the impact of the weapon and/or weapon system on the human body and on material objects.

(5) Any additional information or testing data and pertinent conclusions arising from these tests.

2. The JAG shall maintain a permanent file of all opinions issued under this instruction. See reference (n), paragraph E1.15, for implementation requirements for DON programs.

3. Weapons or weapon systems for the purpose of the legal review of this paragraph are defined as all arms, munitions, materiel, instruments, mechanisms, devices, and those components required for their operation, that are intended to have an effect of injuring, damaging, destroying, or disabling personnel or property, to include non-lethal weapons. For purpose of the legal review described in this paragraph, weapons do not include launch or delivery platforms, such as, but not limited to, ships or aircraft, but rather the weapons or weapon systems contained on those platforms.

2.6.2 Review for Compliance with Arms Control Agreements

All systems developed or acquired by DON shall be reviewed by the Director, Strategic Systems Programs (DIRSSP) via the Naval Treaty Implementation Program (NTIP) office (NT00), with the advice of Navy Office of General Counsel (OGC), to certify compliance with arms control agreements.

1. PMs shall ensure that:

a. As required by reference (t), all activities of programs affected by Arms Control Agreements are reviewed for arms control compliance before such activity is undertaken. CNO (N810) will staff all JCIDS documents through DIRSSP(NT00) for these reviews. For programs whose documents are not staffed through the JCIDS, PMs should provide existing official program documentation and program descriptions to DIRSSP(NT00) for these reviews. If additional information is required, DIRSSP(NT00) will coordinate with the PM. More information can be found at DIRSSP(NT00)'s Web site http://www.ntip.navy.mil.

b. Per reference (t), "arms control agreements" for the purpose of this instruction includes acceptance of any arms control measures by the United States and one or more other nations. It may include legally or politically binding arrangements and may be characterized as, among other things, a treaty, agreement, protocol, declarations, memorandum of agreement/understanding, or confidence and security building measure. Substantively, the term may encompass any agreement or arrangement governing any aspect of the following: the number, types of launch or delivery platforms (sea, air, or land-based), location, testing and performance characteristics of weapons systems (including command and control, logistics, support arrangements, and any related intelligence-gathering mechanism); the numerical strength, organization, equipment, deployment, or employment of the armed forces of the parties; and those measures taken for the purpose of reducing instability in the military environment.

2.7 Non-Acquisition Programs

The Research, Development, Test and Evaluation, Navy Appropriation Account funds both acquisition and non-acquisition programs. A non-acquisition program is an effort that does not directly result in the acquisition of a system or equipment for operational deployment and does not require an ICD. Programming for the requirement shall be included in an SPP input to the Program Objective Memorandum and subsequent RDT&E budget item justification documentation. Program and resource sponsors shall use reference (l) and the FCCC as a guide to determine the net-centric performance requirements for IT systems, including NSS, being acquired by a non-acquisition program.

Non-acquisition programs shall use current documentation required by the PPBES for management control.

CNO sponsors/CMC shall conduct annual requirements-based assessments of all non-acquisition programs, which are outside of the FNC review process. CNO sponsors and CMC shall provide ASN(RD&A) a listing annually of all ongoing non-acquisition programs. Non-acquisition programs that are FNC projects will be reviewed annually through the FNC process.

2.8 Rapid Deployment Capability (RDC) Process and Procedures

The RDC process is a tailored approach for initiating and managing development of a capability for rapid deployment that may transition to an acquisition program.

2.8.1 Objectives of the RDC Process

RDC provides the ability to react immediately to a newly discovered enemy threat(s) or potential enemy threat(s) or to respond to significant and urgent safety situations through special, tailored procedures designed to:

1. Streamline the dialogue among the capabilities needs/requirements community, the PPBES community, and the acquisition management community.

2. Expedite technical, programmatic, and financial decisions.

3. Expedite the procurement and contracting processes.

4. Provide oversight of critical events and activities.

5. Ensure RDC units are interoperable and capable of being integrated with other systems as urgency permits. Program and resource sponsors shall use reference (l) and the FCCC as a guide to determine the net-centric performance requirements for IT systems, including NSS, being acquired as RDC units.

2.8.2 Procedures for RDC Initiation and Planning

RDC efforts shall be initiated as follows:

1. A memorandum requesting initiation of an RDC effort shall be prepared by the program sponsor/requirements division, validated by CNO (N8)/CMC (DC,CD&I), and forwarded to ASN(RD&A) for approval. The memorandum shall contain the following elements formatted per the RDC checklist guidance in ASN(RD&A) memorandum of 1 August 2007:

a. Brief description of the threat or urgency.

b. Description of the requirement and whether it is a Service or joint requirement.

c. A description of known products, domestic and foreign, that can provide the urgently needed capabilities. A description of a rapid development and deployment program if products are not available to provide the urgently needed capabilities.

d. Quantities required.

e. Identification of funding (amount and source).

f. Required deployment date for RDC units.

g. Description of all testing completed to date, including contractor or other Service testing, and all testing required prior to deployment/fielding of the RDC.

h. Description and/or concept of logistics support required.

i. Description and/or concept of support required for long-term maintenance.

j. A statement that a plan will be developed for conducting a quick reaction assessment to verify that deployment of the RDC unit will not adversely affect interoperability and integration, compatibility, or safety.

k. Consideration of MPT requirements for fielding the RDC.

2. ASN(RD&A) shall approve/disapprove the RDC request. If approved, ASN(RD&A) shall assign an RDC program designation identifier, and forward the RDC requirement to the appropriate PEO/SYSCOM/DRPM.

3. PEOs, SYSCOMs, and DRPMs shall develop and approve the following:

a. An overall RDC strategy and specific expediting measures.

b. A plan of action and milestones, which includes transition to an acquisition program, if appropriate.

c. A plan for logistics and long-term maintenance support including demilitarization and disposal.

d. A plan for PEO/SYSCOM/DRPM oversight.

e. A plan for testing to include interoperability, integration, safety, and quick reaction assessment per enclosure (5).

4. Copies of the approved RDC strategy and plans shall be forwarded to ASN(RD&A), the appropriate Deputy ASN(RD&A), ASN(RD&A) CHSENG, DASN (Acquisition and Logistics Management (ALM)), and the program sponsor.

2.9 Executive Review Procedures

2.9.1 DON Program Decision Process

The DON-level acquisition decision briefing shall be the PDM (also referred to as a Navy Program Decision Meeting (NPDM)), as prescribed in reference (q). ACAT ID and IAM programs shall be reviewed by an ASN(RD&A)-chaired PDM prior to an Office of the Secretary of Defense (OSD)-level decision meeting. See reference (m), paragraph 3.10.2, for program decision implementation requirements for ACAT ID and IAM programs.

PEOs, SYSCOM Commanders, and DRPMs shall conduct an internal PR to prepare for the PDM for ACAT I, IA, and II programs, and shall issue schedules at least monthly for these reviews. Required meeting membership is per reference (q). Attendance is controlled by the PEO/SYSCOM/DRPM.

The cognizant PEO/SYSCOM Commander/DRPM, or designee, is responsible for ensuring Integrated Logistics Support (ILS) strategy, planning, risk, and execution are independently assessed prior to proceeding to Milestones B and C and the FRP DR. Assessments shall be conducted per reference (r) and the results reported to the MDA, DASN(ALM), cognizant system DASN, Deputy Chief of Naval Operations (Fleet Readiness and Logistics) (CNO (N4)), program sponsor, and CMC (DC,I&L)/MARCORSYSCOM for cognizant programs. All programmatic aspects that affect logistics support planning, budgeting, execution, and established long-term/sustained material readiness/supportability metrics shall be assessed. Results of an independent assessment shall be the basis for logistics certification for Milestones B and C and FRP DR. Each PEO, SYSCOM Commander, and DRPM shall assess logistics/material readiness for Initial Operational Capability (IOC) and Full Operational Capability (FOC) in conjunction with the customer per references (e) and (r). Using the criteria provided in reference (r), the PEO/SYSCOM Commander/DRPM shall certify to the MDA the adequacy of their ACAT program’s ILS planning, management, resources, and execution. For programs where the MDA is not the Navy or Marine Corps (e.g., ACAT ID or a joint program where a Service other than DON is the lead), the DON CAE (ASN(RD&A)) for ACAT I and II programs, or PEO/SYSCOM Commander/DRPM for ACAT III and IV programs, shall require

completion of an Independent Logistics Assessment (ILA) and obtain certification of the results prior to review by the MDA.

For ship/system alterations, the cognizant PM/claimant stakeholder is responsible for ensuring that the FMP/SHIPMAIN decision requirements have been satisfied, concurrence has been received for readiness to proceed, and for reporting the results to the cognizant MDA. The FMP/SHIPMAIN process shall inform the cognizant OPNAV sponsor in support of the resource and requirements processes.

PMs shall present SHIPMAIN decision point decisions and approved program/resource sponsor/TYCOM ship modernization plans during milestone decision briefs. PMs, in conjunction with program/resource sponsors and TYCOMs, shall ensure alignment between JCIDS/SHIPMAIN modernization plans and acquisition program production/construction schedules prior to contract award. Once a contract has been awarded, PMs shall inform the program/resource sponsor and TYCOM/SHIPMAIN Decision Boards of any contractual, cost, and funding implications of changing delivery quantities and schedules.

2.9.2 IT Acquisition Board (ITAB) Reviews

ACAT IAM programs are governed by reference (m), paragraph 3.10.3, for MAIS decision meetings. DON ACAT IAM programs follow the PDM procedures of reference (q), prior to proceeding to an ITAB Review.

2.9.3 Defense Space Acquisition Board (DSAB) Reviews

The Under Secretary of the Air Force is the DoD Space MDA for all DoD Space MDAPs (ACAT I programs). This authority has been delegated by the Defense Acquisition Executive, through the Secretary of the Air Force. The responsibility for the execution of DoD Space systems flows from the DoD Space MDA through each CAE to the appropriate PEO and PM. Reference (u) provides the necessary guidance and procedures for these programs.

2.9.4 Defense Business System Management Committee (DBSMC) Certification and Approval

Title 10 United States Code (U.S.C.) Section 2222 (as added by reference (v)) prohibits obligation of any funds for any defense business system modernization that will have a total development/modernization cost of greater than $1 million until the proposed modernization is reviewed by the appropriate OSD

Investment Review Board (IRB), certified by the designated OSD approval authority, and approved by the DBSMC. The law specifically provides that obligation of any funds for a defense business system modernization costing more than the $1 million threshold without DBSMC approval is a violation of the Anti-deficiency Act (31 U.S.C. Section 1341(a)(1)).

The Web site http://www.doncio.navy.mil/ provides the following links to the full text of 10 U.S.C. Section 2222 (as added by reference (v)), the detailed OSD certification and approval process guidance, and the detailed DON Business Information Technology System Pre-Certification Workflow Guidance, which includes additional clarification and guidance for DON defense business system modernizations.

2.9.4.1 Defense Business System Definition

Title 10 U.S.C. Section 2222 (as added by reference (v)) defines defense business system as: "an information system, other than an National Security System, operated by, for, or on behalf of the DoD, including financial systems, mixed systems, financial data feeder systems, and information technology and information assurance infrastructure, used to support business activities, such as acquisition, financial management, logistics, strategic planning and budgeting, installations and environment, and human resource management."

2.9.4.2 Roles and Responsibilities

The processes described in the following subparagraphs can be performed concurrently where appropriate.

1. Program Manager/System Owner

The defense business system modernization PM/System Owner is responsible for initiating the certification and approval process for a defense business system modernization with sufficient lead-time to receive DBSMC approval before development/modernization funds need to be obligated. If the system is not registered in DoD Information Technology Portfolio Repository (DITPR)-DON and Naval Information Technology Exhibits/Standard Reporting, it will be necessary to do so before certification/approval can begin.

2. Echelon 1 Functional Area Manager (FAM)

The appropriate DON Echelon 1 FAM will perform a functional review of the defense business system modernization, determine the system's transition plan status, and recommend whether pre-certification should be granted.

3. Core Business Mission Area FAM

The DON FAM assigned as the lead FAM for the Core Business Mission Area (CBMA) (Finance, Acquisition/Logistics, Real Property, or Human Resources Management) will inquire at the associated DoD CBMA IRB in order to identify potential problems before the defense business system modernization's certification package is delivered to the IRB.

4. DON Deputy CIO (Navy or Marine Corps)

The DON Deputy CIO for the appropriate Service will verify the defense business system modernization's compliance with the DON and DoD Business Enterprise Architecture, review budget and earned value data, and recommend whether pre-certification should be granted.

5. DON CIO

DON CIO, as the Department's pre-certification authority, performs a final defense business system modernization review and awards pre-certification, if appropriate. Pre-certified defense business system modernizations are then submitted to the appropriate CBMA IRB for certification and then to the DBSMC for approval.

2.10 Source Selection Authority (SSA)

The SSA policies below apply to competitively negotiated acquisitions covering the selection of one or more prime development and/or production contractors (including concept refinement or the initiation of preliminary, contract, or detailed design for ship development/acquisition programs). These SSA policies also apply to other competitively negotiated acquisitions approved in advance by the assigned PEO, SYSCOM Commander, or DRPM; or the head of the contracting activity.

2.10.1 ACAT I, IA, and II Programs

ASN(RD&A) for assigned ACAT IA programs, and PEOs, SYSCOM Commanders, and DRPMs for their assigned ACAT I, IA, and II programs, shall be the SSA, unless otherwise specified by the USD(AT&L), ASD(NII) for ACAT IA programs, SECNAV, or ASN(RD&A). The ACAT I SSA responsibility may not be further delegated. The ACAT IA SSA responsibility may be delegated. The ACAT II SSA responsibility may be delegated to an individual who:

1. If a member of the armed forces, is a flag or general officer; or

2. If a civilian, is a member of the SES (or in a comparable or higher position under another schedule).

2.10.2 ACAT III, IV, and AAP

PEOs, SYSCOM Commanders, and DRPMs for their assigned ACAT III, IV, and AAPs, and ASN(RD&A) or designee for IT ACAT III, IVT, and AAPs not assigned to PEOs, SYSCOM Commanders, and DRPMs, shall designate the SSA at the time approval is granted to use formal source selection procedures.

2.10.3 Other Competitively Negotiated Acquisitions

The SSA for other competitively negotiated acquisitions shall be as prescribed by the Federal Acquisition Regulations (FAR), the Defense FAR Supplement (DFARS), or the Navy-Marine Corps Acquisition Regulation Supplement (NMCARS), unless otherwise directed by ASN(RD&A).

2.10.4 Source Selection Advisory Council (SSAC)/Source Selection Evaluation Board (SSEB)

Per NMCARS, paragraph 5215.308 Source Selection Decision http://www.acquisition.navy.mil/rda/content/view/full/3464, advisory bodies, such as SSACs and/or SSEBs, must make a recommendation to the SSA and the recommendation shall be in writing.

2.11 Two-Pass/Six-Gate DON Requirements and Acquisition Governance Process

2.11.1 Purpose

The purpose of the Two-Pass/Six-Gate review process is to improve governance and insight into the development, establishment, and execution of acquisition programs in the DON. The goal of the review process is to ensure alignment between Service-generated capability requirements and acquisition, as well as improving senior leadership decision-making through better understanding of risks and costs throughout a program's entire development cycle. Throughout the process, the Services (Navy and Marine Corps) retain sole responsibility for capability development and approval while the ASN(RD&A) or designee within the Office of the Secretary retains the sole authority to make acquisition determinations per reference (w). For nuclear powered ships, the Director Naval Nuclear Propulsion Program (CNO (N00N)) maintains cognizance on all matters pertaining to the propulsion plant. The process changes identified herein apply to, but do not supersede, the processes of references (b), (c), (m), (n), (q), and (u) and are integrated into the governance processes of this instruction.

2.11.2 Objective

The objective of paragraph 2.11 of this enclosure is to establish a disciplined and integrated process for requirements and acquisition decision-making within DON. It will endorse or approve key JCIDS and acquisition documents, and facilitate decisions regarding required Navy and Marine Corps capabilities and acquisition of corresponding materiel solutions.

2.11.3 Scope and Applicability

The process, paragraph 2.11 of this enclosure, will be implemented in an integrated, collaborative environment that includes participation by appropriate elements from the Office of the SECNAV, OPNAV, HQMC, and activities involved in developing JCIDS and acquisition documents. Paragraph 2.11 of this enclosure applies to all pre-MDAP programs, all MDAP (ACAT I) programs, all pre-MAIS programs, all MAIS (ACAT IA) programs, and selected ACAT II programs. The Gate reviews themselves and Service milestone PDMs or PRs defined in reference (q) should be combined when appropriate as determined by the SECNAV, CNO, CMC, or designee. If Gate reviews and PDMs or PRs are combined, the acquisition requirements of references (m), (u), and this

instruction, including statutory and regulatory documentation, shall be satisfied and an ADM shall be issued by the MDA.

2.11.4 Organization and Procedures

Guidelines for selecting the membership of each review and procedures for how the DON requirements/acquisition process will operate are described below. Enclosure (2), Annex 2-A, contains two graphics that illustrate the process. The first graphic illustrates the process flow for program initiation at Milestone A (e.g., selected shipbuilding programs). The second graphic illustrates the process flow for program initiation at Milestone B. The process is overlaid on the acquisition process of references (m) and (u), and this instruction.

2.11.4.1 Concept Decision and Concept Refinement Phase

2.11.4.1.1 Pass 1

Pass 1 is led by CNO or CMC, and encompasses three "requirements" Gates. References (x) and (y), the R3B and MROC charters, detail processes employed by the Navy and Marine Corps to elevate requirements decisions to senior Service leaders. The Pass 1 process will not modify original capability requirements determinations made by the Service Chiefs. Pass 1 includes Gates 1, 2, and 3. Pass 1 is a process that starts prior to CD, continues through the Concept Refinement phase, and ends after Gate 3. Pass 1 includes DON, OSD, and Joint processes leading to approval of an ICD and an AoA Guidance prior to CD. Pass 1 also includes Concept Refinement phase efforts that involve selecting an optimal alternative based on an AoA, endorsing or approving a CDD, developing and approving a detailed Concept of Operations (CONOPS), and approving the SDS Development Plan. All Pass 1 Gate reviews will review program health for satisfactory cost, risks, and budget adequacy.

2.11.4.1.1.1 Gate 1

The Gate 1 review will grant authority for a DON-initiated ICD to be submitted for Joint review per references (b) and (c). The corresponding CBA serves as the core input for the ICD. Gate 1 will also validate the proposed AoA Guidance and authorize a program to proceed to CD.

2.11.4.1.1.2 Gate 2

The Gate 2 review will occur after completion of the AoA and prior to a program submitting Milestone A documentation. It will: (a) review AoA assumptions, analysis, cost estimates, conclusions, and recommendations; (b) approve Service's preferred alternatives resulting from the AoA analysis; (c) provide approval to develop a CDD and CONOPS with guidance and assumptions, consistent with the preferred alternatives; and (d) authorize a program to proceed to the next event (i.e., to Gate 3 when program initiation will be at Milestone A, or to Milestone A when program initiation will be at Milestone B).

2.11.4.1.1.3 Gate 3

The Gate 3 review will: (a) grant authority for a DON-initiated CDD to be submitted for Joint review per references (b) and (c); (b) approve CONOPS that will include a description of capability employment, sustainment, basing, training, and manning to support life-cycle cost estimates; (c) validate that the SDS Development Plan addresses all required areas and serve as the input for follow-on Pass 2 Gates; and (d) review program health for satisfactory cost, risks, and budget adequacy. Gate 3 will grant approval to continue with Milestone A or Milestone B preparations.

2.11.4.2 Milestone A and Technology Development Phase

2.11.4.2.1 Pass 2

Pass 2 is led by the CAE, and encompasses three "acquisition" Gates. Pass 2 includes Gates 4, 5, and 6. Pass 2 starts after Gate 3 and ends after Milestone B during the initial portion of the SDD phase. Follow-on Gate 6 reviews will occur during the SDD and Production and Deployment phases. All Pass 2 Gate reviews will review program health for satisfactory cost, risks, and budget adequacy.

2.11.4.2.1.1 Gate 4

The Gate 4 review approves the SDS and authorizes a program to proceed to Gate 5 or Milestone B. The SDS may be an attachment of the SDD phase RFP. Gate 4 may be combined with Gate 5 and/or Milestone B for ACAT IC, IAC, and selected ACAT II programs as determined by SECNAV or ASN(RD&A).

2.11.4.3 Milestone B and System Development and Demonstration (SDD) Phase

2.11.4.3.1 Pass 2

2.11.4.3.1.1 Gate 5

The Gate 5 review ensures that the Service has completed needed actions and recommends to the MDA approval of the release of the SDD RFP to industry as authorized by the Acquisition Strategy. Gate 5 review may occur before, concurrent with, or after Milestone B depending upon the chosen acquisition strategy and the related program risk. Gate 5 and Milestone B may be combined for ACAT IC, IAC, and selected ACAT II programs as determined by SECNAV or ASN(RD&A).

2.11.4.3.1.2 Gate 6

The Gate 6 review assesses overall program health including readiness for production, the sufficiency of the SDS, the EVMS PMB, and the IBR (see The Program Managers' Guide to the Integrated Baseline Review Process). Gate 6 occurs following award of the SDD contract and satisfactory completion of the IBR. Follow-on Gate 6 reviews will be conducted to endorse or approve the CPD, review program health prior to and post Milestone C and the FRP DR, and serve as forums for CSBs for ACAT I programs as defined by reference (z). A Gate 6 review conducted to endorse or approve a CPD will be chaired by CNO/CMC, or designee.

2.11.4.4 DON Requirements/Acquisition Gate Review Membership

2.11.4.4.1 Chairperson

Enclosure (2), Annex 2-B, Table E2T3 includes the chair of the various Gates. The CNO, CMC, ASN(RD&A), Deputy Chief of Naval Operations (Integration of Capabilities and Resources) (DCNO (N8)), DC, CD&I, or designee, will serve as the chair of Gate reviews per paragraphs 2.11.5.1, 2.11.5.2, and 2.11.5.3 below. In cases of combined Navy and Marine Corps programs, Gates 1 through 3 and CPD only Gate 6 will be co-chaired.

2.11.4.4.2 Principal Members

Principal members are VCNO, ACMC, ASN(RD&A), Assistant Secretary of the Navy (Financial Management and Comptroller (ASN(FM&C)), Director Naval Nuclear Propulsion Program (N00N) as required, Principal DASN(RD&A) (PDASN(RD&A)), DCNO (N1, N2, N3/N5, N4, N6, N8), Deputy Commandant for Programs and Resources (DC, P&R), DC CD&I, Warfare Enterprise (WE) Lead and/or Deputy, United States Fleet Forces (USFF)/Marine Forces (MARFOR), and cognizant SYSCOM Commander. The Chair shall determine the final membership for each Gate review. However, the principal members may request attendance by other relevant commands. These members may include DON CIO, CNR, HQMC (Deputy Commandant for Aviation (DC, Avn), Deputy Commandant for Manpower and Reserve Affairs (DC, M&RA), Director Intel, Deputy Commandant for Plans, Policies and Operations (DC, PP&O), Deputy Commandant for Installations and Logistics (DC, I&L), Director C4/CIO), and cognizant PEO. Attendance is limited to Principal or Deputy at the Flag/General Officer/SES level plus one.

2.11.4.4.3 Advisory Members

Advisory members include, but are not limited to, CNO (N80, N81, N82, N81D, N091, Resource Sponsor), USFF (N8), ASN(FM&C) Office of Budget (FMB), HQMC (Counsel (CL), Program Analysis and Evaluation (PA&E)), Office of General Counsel (OGC), Director Navy International Programs Office (NIPO), SECNAV Office of Program and Process Assessment (OPPA), ASN(RD&A) CHSENG, and cognizant DASN. For joint programs where the Navy or Marine Corps is the lead Service, the other participating Services shall be invited to attend, as appropriate. Attendance is limited to Principal or Deputy at the Flag/General Officer/SES level plus one.

2.11.4.5 DON Requirements/Acquisition Individual Gate Review Membership and Input/Exit Criteria

Enclosure (2), Annex 2-B, contains Table E2T3 consisting of the individual Gate membership, input criteria, goals/exit criteria, and briefing content, and individual Gate exit criteria templates. Gate reviews may be combined or tailored as determined by SECNAV, CNO, CMC, or designee, for an individual program depending upon where the program enters, or is currently in, the acquisition life-cycle.

2.11.4.6 System Design Specification (SDS) Guidance

Enclosure (2), Annex 2-C, contains top-level SDS description. An SDS Guidebook and platform appendices are available on the ASN(RD&A) website under Acquisition One Source under Program Assistance and Tools under Handbooks, Guides, and Reports for SYSCOMs, PEOs, and PMs for developing an SDS for individual systems.

2.11.5 Responsibilities

2.11.5.1 ASN(RD&A)

Execute CAE and delegated MDA responsibilities of references (m), (n), (q), (u), and this instruction for pre-MDAP, pre-MAIS, ACAT I, IA, and selected ACAT II programs for CD, all milestones, and FRP DR.

Chair Gates 4, 5, and 6 (non-CPD) reviews.

Develop procedures to execute the Gate review process.

2.11.5.2 CNO/CMC

Execute Service Chief responsibilities of references (b) and (c) and this instruction for development, validation, and approval of JCIDS documents and concurrence with applicable acquisition documents per this instruction and as directed by higher authority.

Chair Gates 2, 3, and 6 (CPD only) reviews, or designate a Chair.

2.11.5.3 DCNO (N8)/DC, CD&I

Develop procedures within the Navy and Marine Corps Staffs to execute the Gate review process.

Chair Gate 1 reviews. Chair Gates 2, 3, and 6 (CPD only) reviews, when designated.

2.11.5.4 Program Executive Officers (PEOs)/Systems Commands (SYSCOMs) Commanders

Provide support and assistance to DCNO (N8), DC P&R/DC CD&I, and ASN(RD&A).

2.11.5.5 ASN(FM&C)FMB

Coordinate efforts to identify and fund DON Requirements/Acquisition governance process within the PPBE process in coordination with DCNO (N8), DC P&R, and DC CD&I.

2.11.5.6 OGC

Advise ASN(RD&A), CNO/CMC, and other members on legal issues arising from individual Gate reviews and CSBs, in consultation, as appropriate, with the JAG, Special Counsel to the CNO, or Staff Judge Advocate (SJA) to the CMC.

2.11.6 Industry Involvement

While not involved in the Gate reviews themselves, industry involvement in the development of design concepts and assessment of industrial capabilities, cost, schedule, and technical risks should be sought at the earliest opportunity possible.

Annex 2-A - DON Requirements/Acquisition Two-Pass/Six-Gate Process with Development of a System Design Specification (illustrated example for program initiation at Milestone A)

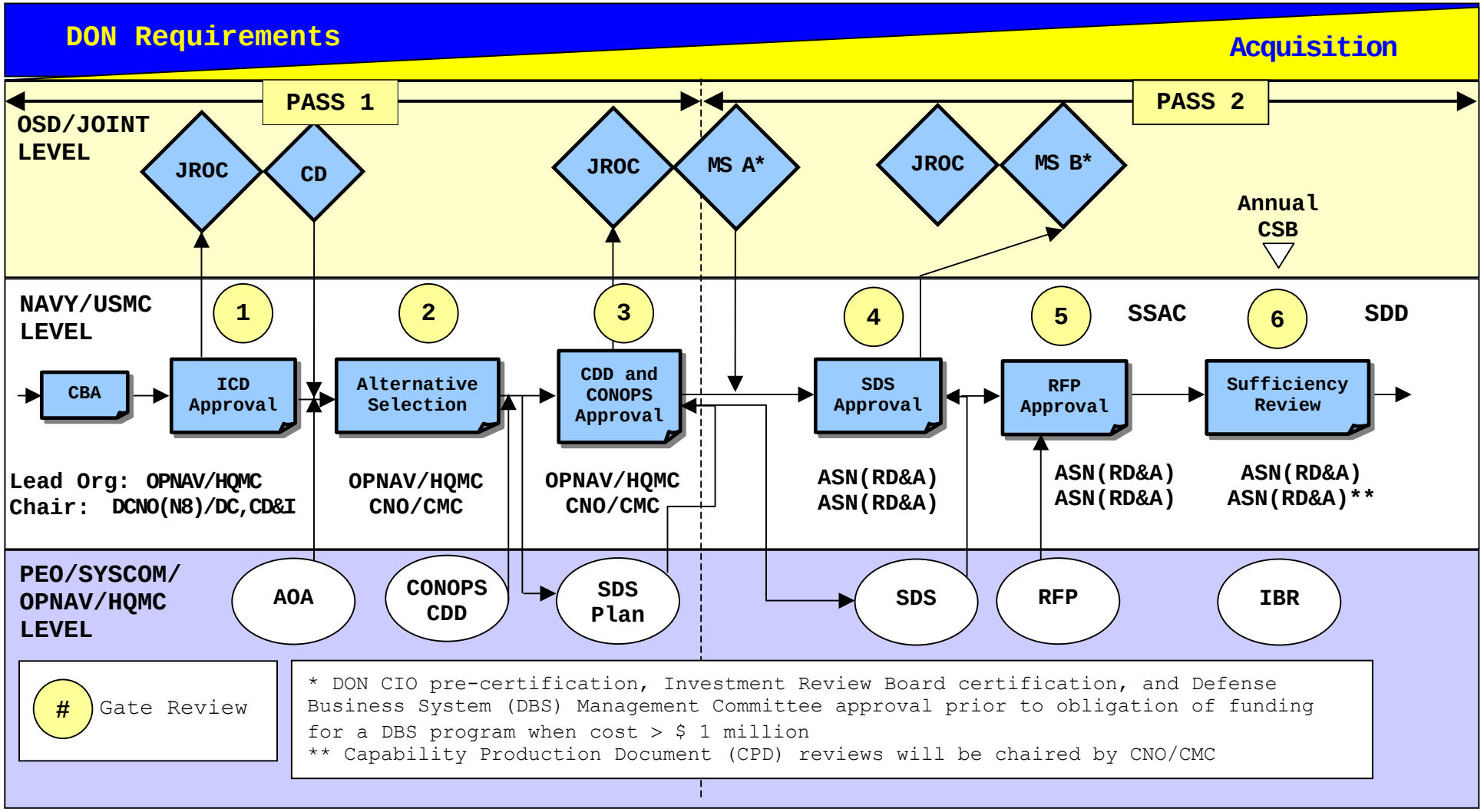

AOA	Analysis of Alternatives	IBR	Integrated Baseline Review
ASN(RD&A)	Asst Secretary of the Navy (Research, Development and Acquisition)		
CBA	Capabilities-Based Assessment	ICD	Initial Capabilities Document
CD	Concept Decision	JROC	Joint Requirements Oversight Council
CDD	Capability Development Document	PEO	Program Executive Officer
CMC	Commandant of the Marine Corps	RFP	Request for Proposal
CNO	Chief of Naval Operations	SDD	System Development & Demonstration
CONOPS	Concept of Operations	SDS	System Design Specification
CSB	Configuration Steering Board	SSAC	Source Selection Advisory Council
HQMC	Headquarters Marine Corps		

Annex 2-A - DON Requirements/Acquisition Two-Pass/Six-Gate Process with Development of a System Design Specification (illustrated example for program initiation at Milestone B)

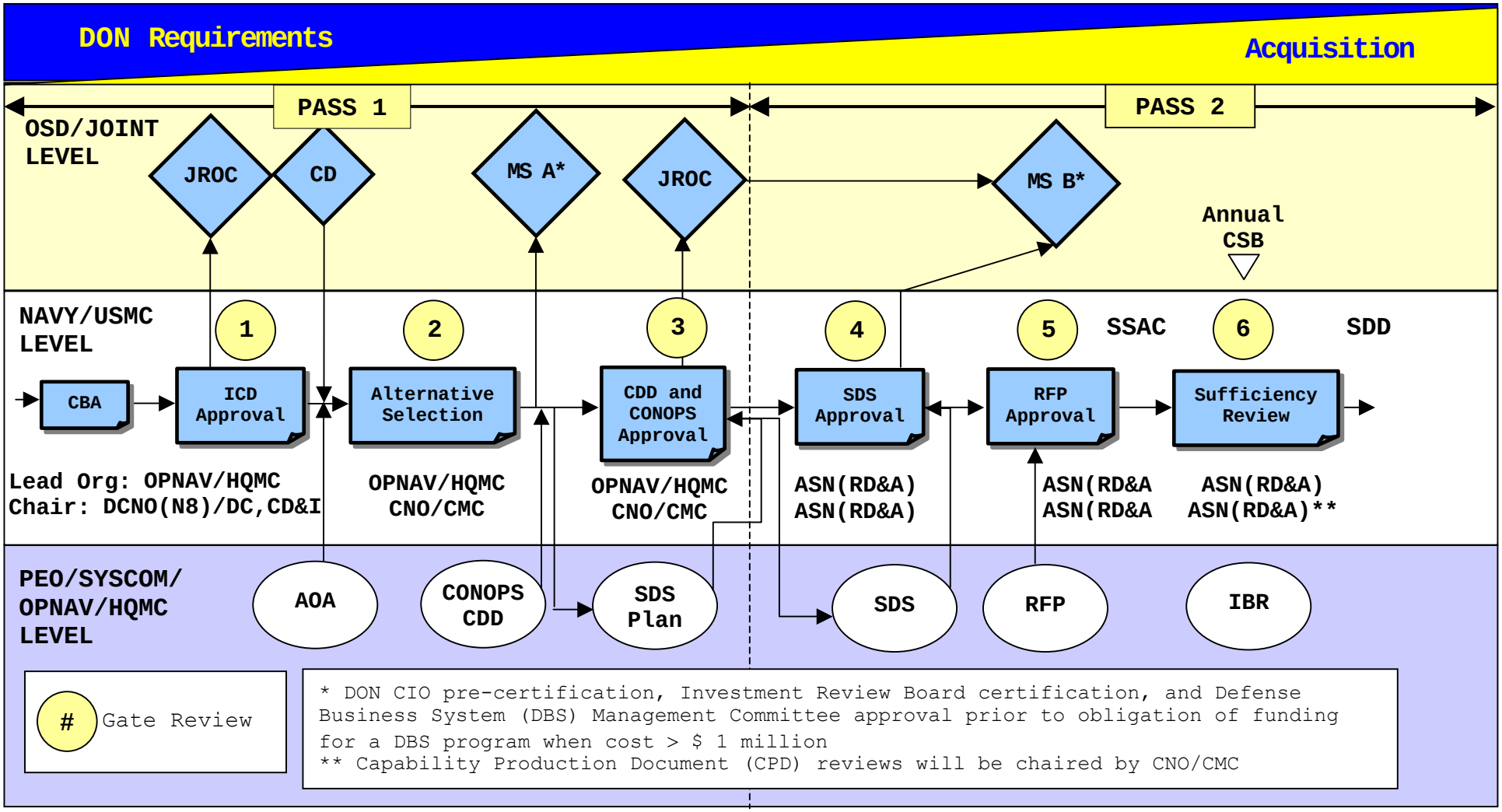

AOA	Analysis of Alternatives	IBR	Integrated Baseline Review
ASN(RD&A)	Asst Secretary of the Navy (Research, Development and Acquisition)		
CBA	Capabilities-Based Assessment	ICD	Initial Capabilities Document
CD	Concept Decision	JROC	Joint Requirements Oversight Council
CDD	Capability Development Document	PEO	Program Executive Officer
CMC	Commandant of the Marine Corps	RFP	Request for Proposal
CNO	Chief of Naval Operations	SDD	System Development & Demonstration
CONOPS	Concept of Operations	SDS	System Design Specification
CSB	Configuration Steering Board	SSAC	Source Selection Advisory Council
HQMC	Headquarters Marine Corps		

Annex 2-B - Table E2T3 DON Requirements/Acquisition Gates, Membership, Input Criteria, Goals/Exit Criteria, and Briefing Content

Gates	Membership	Input Criteria	Goals/Exit Criteria	Briefing Content
1 Validate ICD & AoA Guidance, Authorize proceeding to CD Briefer: RO, prospective PM, and AoA Director	Chair: DCNO (N8)/DC CD&I Principal: N1/M&RA, N2/Intel, N3/N5/DC PP&O, N4/I&L, N6/DirC4/CIO, DC P&R, ASN(RD&A), N00N, PDASN, WE Lead &/or USFF/MARFOR, SYSCOM – as required: PEO, CNR, DON CIO, DC Avn Advisory: ASN(RD&A)CHSENG, DASN, N80, N81, N82, N81D, N091, USFF(N8), HQMC(CL, PA&E), OGC, ASN(FM&C)FMB, Resource Sponsor, DirNIPO, OPPA	1. Objectives of Top Leadership Teams/CDR's Intent 2. Completed CBA 3. Completed Service review of ICD 4. Identification of mutually shared needs with foreign countries	1. Approval for ICD entry into Joint review, or endorsement of ICD enroute to CNO/CMC for signature 2. Validation of AoA guidance, assumptions, & timeline and authorization for submittal to Director, PA&E (ACAT I & IA); or Approval of AoA guidance, assumptions, & timeline (selected ACAT II) 3. Approval to proceed to CD 4. Determination of next Gate review	1. ICD description 2. AoA proposed guidance including assumptions, cost constraints, international opportunities & lifecycle considerations 3. Doctrine, organization, training, materiel, leadership & education, personnel, & facilities (DOTMLPF) change recommendation (DCR) inputs 4. Program Health (funding, risk, staffing sufficiency, commonality, maintainability, supportability, standards)
2 Validate AoA results. Approve CONOPS, CDD Guidance, Authorize proceeding to Gate 3 or MS A Briefer: RO, prospective PM, and AoA Director	Chair: CNO/CMC, or designee Principal: VCNO/ACMC, N8/P&R/CD&I, N1/M&RA, N2/Intel, N3/N5/DC PP&O, N4/I&L, N6/DirC4/CIO, ASN(RD&A), N00N, PDASN, WE Lead &/or USFF/MARFOR, SYSCOM – as required: CNR, DON CIO, DC Avn Advisory: ASN(RD&A)CHSENG, DASN, N80, N81, N82, N81D, N091, USFF(N8), HQMC(CL, PA&E), OGC, ASN(FM&C)FMB, Resource Sponsor, PEO, DirNIPO, OPPA	1. Approved ICD 2. AoA Report Complete 3. MS A documentation sufficiently mature for Senior Service leadership review 4. Preferred alternative identified	1. Evaluation/ Validation of AoA Findings 2. Approve capability attributes of preferred alternative recommendations 3. Approval to develop CDD & CONOPS with guidance & assumptions 4. Satisfactory review of Program Health 5. Approval to proceed to the next event (i.e., to Gate 3 or to MS A)	1. Summarize AoA report including assumptions and findings 2. Proposed CDD/CONOPS guidance to include technology protection & interoperability (domestic & foreign) 3. Preliminary configurations guidance 4. Preliminary technology readiness levels (TRLs) assessment 5. Assessment of industrial base 6. Projected life-cycle costs for all options 7. Program Health

Input Criteria – is a requirement to convene a Gate review
Exit Criteria – is a requirement to complete a Gate review

Annex 2-B - Table E2T3 DON Requirements/Acquisition Gates, Membership, Input Criteria, Goals/Exit Criteria, and Briefing Content (cont'd)

Gates	Membership	Input Criteria	Goals/Exit Criteria	Briefing Content
3 CDD/ CONOPS Approval Briefer: RO and prospective PM	Chair: CNO/CMC, or designee Principal: VCNO/ACMC, N8/P&R/CD&I, N1/M&RA, N2/Intel, N3/N5/DC PP&O, N4/I&L, N6/DirC4/CIO, ASN(RD&A), ASN(FM&C), N00N, PDASN, WE Lead &/or USFF/MARFOR, SYSCOM - as required: CNR, DON CIO, DC Avn Advisory: ASN(RD&A)CHSENG, DASN, N80, N81, N82, N81D, N091, USFF(N8), HQMC(CL, PA&E), OGC, ASN(FM&C)FMB, Resource Sponsor, PEO, DirNIPO, OPPA	1. Approved AoA/AoA update 2. Completed Service review of CDD & CONOPS 3. Completed SDS Development Plan (including assessment of Critical Program Information and design for export)	1. Approval for CDD entry into Joint review, or endorsement of CDD enroute to CNO/CMC for signature 2. Approval of CONOPS 3. Validation of SDS Development Plan and determination of potential for export 4. Satisfactory review of Program Health 5. Approval to proceed to MS A or Gate 4	1. Summary of CONOPS 2. CDD Description including KPPs & KSAs 3. SDS Development Plan summary 4. Initial independent cost & schedule estimate/ assessment comparison to PM estimates 5. Proposed operational & technical authority guidance & assumptions 6. Program Health
4 SDS Approval Briefer: PM	Chair: ASN(RD&A) Principal: VCNO/ACMC, ASN(FM&C), N00N, N8/P&R/CD&I, N1/M&RA, N2/Intel, N3/N5/DC PP&O, N4/I&L, N6/DirC4/CIO, PDASN, WE Lead &/or USFF/MARFOR, SYSCOM, PEO - as required: CNR, DON CIO, DC Avn Advisory: ASN(RD&A)CHSENG, DASN, N80, N81, N82, N81D, N091, USFF(N8), HQMC(CL, PA&E), OGC, ASN(FM&C)FMB, Resource Sponsor, DirNIPO, OPPA	1. Approved CDD (for programs initiated at MS A, JROC approved CDD update) 2. Service approved CONOPS 3. Completed review of SDS 4. Independent cost estimates, PM estimates, and available budget	1. Approved SDS (see Exit Criteria Template) 2. Approval to proceed to Gate 5 or MS B (see Exit Criteria Template) 3. Approval of Anti-Tamper Plan (domestic and foreign) 4. Satisfactory review of Program Health (see Exit Criteria Template)	1. Program capability review focused on SDS satisfying CDD, identify SDS technical requirements, program risk, independent & PM cost (including anti-tamper cost) & schedule estimates, triggers for R3B review, producibility, staffing sufficiency 2. Program Health

Input Criteria – is a requirement to convene a Gate review
Exit Criteria – is a requirement to complete a Gate review

Annex 2-B - Table E2T3 DON Requirements/Acquisition Gates, Membership, Input Criteria, Goals/Exit Criteria, and Briefing Content (cont'd)

Gates	Membership	Input Criteria	Goals/Exit Criteria	Briefing Content
5 RFP Approval Briefer: PM	Chair: ASN(RD&A) Principal: VCNO/ACMC, ASN(FM&C), N00N, N8/P&R/CD&I, N1/M&RA, N2/Intel, N3/N5/DC PP&O, N4/I&L, N6/DirC4/CIO, PDASN, WE Lead &/or USFF/MARFOR, SYSCOM, PEO - as required: CNR, DON CIO, DC Avn Advisory: ASN(RD&A)CHSENG, DASN, N80, N81, N82, N81D, N091, USFF(N8), HQMC(CL, PA&E), OGC, ASN(FM&C)FMB, Resource Sponsor, DirNIPO, OPPA	1. Approved SDS 2. Key knowledge of the business process/ business arrangements as defined in the Acquisition Strategy	1. Approval for RFP release as authorized by the Acquisition Strategy 2. Approval of buy & build business strategy as defined in the Acquisition Strategy 3. Satisfactory review of Program Health (see Exit Criteria Template)	1. Same as Gate 4 plus 2. Consideration of potential export/ co-development 3. Program Health
6 Sufficiency Review Briefer: PM	Chair: ASN(RD&A) or CNO/CMC for CPDs Principal: VCNO/ACMC, ASN(FM&C), N00N, N8/P&R/CD&I, N1/M&RA, N2/Intel, N3/N5/DC PP&O, N4/I&L, N6/DirC4/CIO, PDASN, WE Lead &/or USFF/MARFOR, SYSCOM, PEO - as required: CNR, DON CIO, DC Avn Advisory: ASN(RD&A)CHSENG, DASN, N80, N81, N82, N81D, N091, USFF(N8), HQMC(CL, PA&E), OGC, ASN(FM&C)FMB, Resource Sponsor, DirNIPO, OPPA	1. Source Selection (SS) complete 2. Contract awarded 3. Integrated Baseline Review (IBR) complete CPD only 1. Completed Service review of CPD & CONOPS	1. Performance Measurement Baseline (PMB) established and IBR results acceptable 2. Contractor's PMB meets SDS requirements 3. Satisfactory review of Program Health (see Exit Criteria Template) CPD only 1. Approval for CPD entry into Joint review, or endorsement of CPD enroute to CNO/CMC for signature	1. Same as Gate 5 plus 2. Assess IBR results 3. Plan to initiate applicable disclosure reviews 4. Program Health CPD only 1. Summary of CONOPS 2. CPD description including KPPs & KSAs 3. Program Health

Input Criteria – is a requirement to convene a Gate review
Exit Criteria – is a requirement to complete a Gate review

Annex 2-B - DON Requirements/Acquisition Gate 1 Exit Criteria Template

1. Approval for ICD entry into Joint review, or endorsement of ICD enroute to CNO/CMC for signature.

2. Validation of AoA and CD guidance, assumptions, and timeline and authorization for submittal to Director, Program Analysis and Evaluation (PA&E) (ACAT I and IA), or approval of AoA and CD guidance, assumptions, and timeline (selected ACAT II).

3. Approval to proceed to CD.

4. Determination of next Gate review.

Annex 2-B - DON Requirements/Acquisition Gate 2 Exit Criteria Template

1. Evaluation/Validation of AoA findings to include:

    a. Identification of preferred alternative.

    b. For ACAT I and IA programs: DON validation of AoA Report and approval to forward report (including Service's preferred alternative) to Office of the Secretary of Defense (Program Analysis and Evaluation) (OSD(PA&E)).

    c. For selected ACAT II programs: Approval of AoA Report.

2. Capability Attributes (Performance Parameters) recommendations:

    a. Approval of initial KPPs and KSAs for CDD Development.

    b. Approval of initial KPP/KSA Threshold and Objective values.

    c. Approval to develop recommended Non-Materiel Solutions.

3. Approval to Develop a CDD and a CONOPS with guidance and assumptions.

4. Satisfactory review of Program Health.

5. Approval to proceed to the next event (i.e., to Gate 3 when program initiation will be at Milestone (MS) A (e.g., selected shipbuilding programs), or to MS A when program initiation will be at MS B).

Annex 2-B - DON Requirements/Acquisition Gate 3 Exit Criteria Template

1. Approval for CDD entry into Joint review, or endorsement of the CDD enroute to CNO or CMC for signature.

2. Approval of CONOPS.

3. Validate the SDS development plan addresses required areas and determination of potential for export.

4. Satisfactory review of Program Health.

5. Approval to proceed to Milestone (MS) A or Gate 4.

Annex 2-B - DON Requirements/Acquisition Gate 4 Exit Criteria Template

1. ASN(RD&A) approved SDS for the SDD phase for lead and follow ship construction or engineering development models for other than ship construction.

a. Translation of CDD requirements to be used for developing system design.

(1) Do we know what we are buying?

(2) Ensure system designed for producibility, operability, allied interoperability, and maintainability.

b. Define DON design criteria in areas that are applicable.

2. Approval to proceed to Gate 5 or Milestone B.

a. Service approval of key milestone documents.

3. Approval of Anti-Tamper Plan (domestic and foreign).

4. Satisfactory review of Program Health (as defined by a Probability of Program Success (PoPS) criteria in the PoPS Guidebook at the Naval Collaborative Engineering Environment (NCEE) Web site https://ncee.navy.mil/ (Government Only)).

a. Based on CDD requirements, are the cost, schedule, and technical risks identified and corresponding mitigation strategies acceptable?

b. Understanding of the industrial implications.

c. Alignment with Service and DoD vision.

Annex 2-B - DON Requirements/Acquisition Gate 5 Exit Criteria Template

1. ASN(RD&A) approves release of RFP to industry for the SDD phase.

2. Approval of buy and build business strategy as defined in the Acquisition Strategy.

3. Satisfactory review of Program Health (as defined by a PoPS criteria in the PoPS Guidebook at the Naval Collaborative Engineering Environment (NCEE) Web site https://ncee.navy.mil/ (Government Only)).

a. Based on the CDD requirements are the cost, schedule, and technical risks identified and mitigation strategies acceptable?

b. Understanding of the industrial implications.

c. Alignment with Service and DoD vision.

d. Is the Government staffing aligned to support evaluation of proposals?

Annex 2-B - DON Requirements/Acquisition Gate 6 Exit Criteria Template

1. Earned Value Management System (EVMS) Performance Measurement Baseline (PMB) established and Integrated Baseline Review (IBR) results acceptable.

2. Contractor's PMB meets the SDS requirements.

3. Satisfactory review of Program Health (as defined by a PoPS criteria in the PoPS Guidebook at the Naval Collaborative Engineering Environment (NCEE) Web site https://ncee.navy.mil/ (Government Only)).

a. Based on the CDD requirements are the cost, schedule, and technical risks associated with contract performance identified and mitigation strategies acceptable?

b. Industrial Base implications understood.

c. Contract's material solution aligned with Service and DoD vision.

d. Is the Government and contractor staffing aligned to support program execution?

e. Assess results of the IBR.

f. Based on contract performance to date, what is the PM's Estimate at Completion (EAC) of program cost and schedule.

g. Is there a Program Objective Memorandum (POM)/PR requirement impact?

Gate 6 For Capability Production Document (CPD) only

1. Approval for CPD entry into Joint review, or endorsement of CPD enroute to CNO/CMC for signature.

Annex 2-C - System Design Specification (SDS) Description

An SDS is produced upon successful completion of a System Requirements Review. The SDS Development Plan is developed during the Concept Refinement phase for programs being initiated at Milestone A or during the Technology Development (TD) phase for programs being initiated at Milestone B in conjunction with development of the CDD. The SDS is the end result of flowing down the CDD performance requirements into a document that specifies: (a) the basic functional requirements (as defined in the SDS Guidebook and usually documented in the System Performance and Design Specifications) for the preferred alternative selected, and (b) major programmatic actions required to deliver the system. At a minimum, these requirements should address:

1. KPPs, KSAs, Additional Attributes and derived requirements that must be met by the design in advance of the detail system specification. These requirements should be identified in such a manner that they facilitate straightforward incorporation into the eventual system/ship specification.

2. The family of system specifications including tailorable and non-tailorable specifications, interface requirements, and detailed design standards.

3. Government oversight that delineates the key responsibilities/engagement points for ensuring effective prosecution of design and construction activities.

4. Division of responsibilities document that addresses lead activities (both government and industry) for various aspects of design and manufacturing.

5. Major industrial capability changes (e.g., facilities, design tools, staffing, unique skills) that need to be addressed to effectively deliver the designed system.

6. Major processes that will be employed to ensure successful implementation of the SDS (e.g., Integrated Master Schedule, Manufacturing and Assembly Plan, Work Breakdown Structure, Commitment Tracking System, Earned Value Management, etc).

7. Threshold attribute values for operability, producibility, and maintainability. The SDS should normally have significant industry input at the prime contractor and sub-contractor levels. This input may be achieved via the use of a draft RFP and a draft SDS when authorized by the MDA in the Acquisition Strategy.

The SDS is a tailored document that identifies technology development risks, validates preferred system design solutions, evaluates manufacturing processes, refines system requirements, and is an input for the acquisition program baseline in order to inform decision makers earlier in the acquisition process. The SDS is approved at Gate 4.

Chapter 3
Statutory, Regulatory, and Contract Reporting Information and Milestone Requirements

References:
(a) DOD Directive 5000.1, The Defense Acquisition System, of 12 May 03
(b) DOD Instruction 5000.2, Operation of the Defense Acquisition System, of 12 May 03
(c) Chairman of the Joint Chiefs of Staff Instruction (CJCSI) 3170.01F, Joint Capabilities Integration and Development System, 1 May 07
(d) Chairman of the Joint Chiefs of Staff Manual (CJCSM) 3170.01C, "Operation of the Joint Capabilities Integration and Development System," 1 May 07
(e) USD(P&R) Memorandum, Interim Policy and Procedures for Strategic Manpower Planning and Development of Manpower Estimates, of 10 Dec 03
(f) SECNAVINST 4105.1A
(g) CJCSI 6212.01D, Interoperability and Supportability of Information Technology and National Security Systems, of 8 Mar 06
(h) SECNAVINST 5000.36A
(i) DOD 4140.1-R, DoD Supply Chain Material Management Regulation, of 23 May 03
(j) Public Law 108-136, National Defense Authorization Act for Fiscal Year 2004, Section 802, Quality Control In Procurement Of Aviation Critical Safety Items And Related Services, of 24 Nov 03
(k) SECNAVINST 4140.2
(l) SECNAVINST 5100.10J
(m) OPNAVINST 8026.2B
(n) DOD Directive 5200.39, Security, Intelligence, and Counterintelligence Support to Acquisition Program Protection, of 10 Sep 97
(o) SECNAVINST 3501.1A
(p) OPNAVINST 3811.1C
(q) DOD Instruction 4630.8, Procedures for Interoperability and Supportability of Information Technology (IT) and National Security Systems (NSS), of 30 Jun 04
(r) DOD Directive 4650.1, Policy for Management and Use of the Electromagnetic Spectrum, of 8 Jun 04
(s) DOD Directive 3222.3, DoD Electromagnetic Environmental Effects (E3) Program, of 8 Sep 04

(t) DOD 5200.1-M, Acquisition Systems Protection Program, of 16 Mar 94
(u) OPNAVINST 3432.1
(v) OPNAVINST 1500.76A
(w) USD(A&T) Memorandum, Collection of Past Performance Information in the Department of Defense, of 20 Nov 97
(x) Federal Acquisition Regulation (FAR), Part 15, Contracting by Negotiation
(y) Federal Acquisition Regulation (FAR), Part 19, Small Business Programs
(z) Federal Acquisition Regulation (FAR), Part 42, Contract Administration and Audit Services
(aa) Defense Federal Acquisition Regulation Supplement (DFARS), Part 236, Construction and Architect-Engineer Contracts
(ab) Department of the Navy Guide, Contractor Performance Assessment Reporting System (CPARS), of Feb 04

3.1 Program Information

See Tables E3T1 (statutory), E3T2 (regulatory), and E3T3 (contract reporting) for Acquisition Category (ACAT) program and contract reporting information and milestone requirements. The format for reporting information is at the discretion of the Milestone Decision Authority (MDA), except as indicated in the above three tables and/or references (a) through (d). Program Manager (PM)-prepared reporting information and milestone requirements may be tailored and combined when approved by the MDA.

The designation ACAT I, when used in Tables E3T1, E3T2, and E3T3, signifies both ACAT ID and IC programs. Similarly, the designation ACAT IA, when used in Tables E3T1, E3T2, and E3T3, signifies both ACAT IAM and IAC programs. The designation ACAT IV, when used in Tables E3T1, E3T2, and E3T3, signifies both ACAT IVT and IVM programs. The source of the statutory, regulatory, and contract reporting requirement for each entry (arranged in alphabetical order) in Tables E3T1, E3T2, and E3T3, can be found in references (a) and (b), or this instruction. The Assistant Secretary of the Navy (Research, Development and Acquisition) (ASN(RD&A)) is the Component Acquisition Executive (CAE) cited in Tables E3T1 and E3T2.

In Tables E3T1 and E3T2, under the column titled "Presentation Medium," the remark "Optional" or "MDA option" does not mean that the program information or report itself is optional, but rather that the medium (e.g., written document, formal presentation, informal briefing) and format is at the option of the MDA.

Acquisition documentation for ACAT I and II programs requiring coordination with the Office of the Chief of Naval Operations (OPNAV), Headquarters Marine Corps (HQMC), and the Offices of the Assistant Secretaries of the Navy shall be distributed concurrently to all applicable offices. Individual signature sheets will be collated by the Office of ASN(RD&A). Concurrence will be assumed after 30 calendar days unless a specific non-concurrence has been forwarded to ASN(RD&A).

The following **Information Technology (IT)** and **National Security Systems (NSS)** definitions are provided for clarification purposes relative to use of the terms in Tables E3T1 and E3T2.

IT - Any equipment, or interconnected system or subsystem of equipment, that is used in the automatic acquisition, storage, manipulation, management, movement, control, display, switching, interchange, transmission, or reception of data or information.

(1) The term "equipment" means any equipment used by a Component directly or is used by a contractor under a contract with the Component that requires the use of the equipment, or the use, to a significant extent, of such equipment in the performance of a service or the furnishing of a product.

(2) The term "IT" includes computers, ancillary equipment, software, firmware and similar procedures, services (including support services), and related resources. It does not include any equipment that is acquired by a Federal contractor incidental to a Federal contract.

The above "IT" definition is from the Clinger-Cohen Act (Public Law 104-106, 10 Feb 96, Section 5002) (codified in 40 U.S.C. Section 1401(3) and 40 U.S.C. Section 11101(6)).

NSS - Any telecommunications or information system operated by the U.S. Government, the function, operation, or use of which:

(1) involves intelligence activities;

(2) involves cryptologic activities related to national security;

(3) involves command and control of military forces;

(4) involves equipment that is an integral part of a weapon or weapons system;

(5) subject to the limitation below, is critical to the direct fulfillment of military or intelligence missions. **This does not include a system that is to be used for routine administrative and business applications (including payroll, finance, logistics, and personnel management applications).**

The above NSS definition is from the CCA (Public Law 104-106, 10 Feb 96, Section 5142) (codified in 40 U.S.C. Section 1452, 40 U.S.C. Section 11103, and 10 U.S.C. Section 2315).

The term "IT, including NSS" is used throughout this instruction to indicate when an IT statute, regulation, policy, or process is also applicable to an NSS.

In the context of item (4) under the above NSS definition, a weapon or weapons system that includes a telecommunications or information system is an NSS.

Table E3T1 STATUTORY INFORMATION AND MILESTONE REQUIREMENTS					
Program Information and Reports	**Presenta-tion Form**	**ACAT**	**Applicability *****	**Prepared By**	**Approved By**
OSD PREPARED					
Beyond LRIP Report [1/]	Optional	**I, IA + OSD OT&E oversight pgms designated by DOT&E**	Full-Rate Production Decision Review (FRP DR)	DOT&E	DOT&E
Electronic Warfare (EW) T&E Report Report Control Symbol (RCS) DD-AT&L(A)2137*	Optional	**EW pgms on OSD T&E oversight**	Annually	Dir Def Systems DOT&E	Dir Def Systems DOT&E
Independent Cost Estimate*	MDA option	**I**	Pgm Initiation for Ships (cost assessment only pre-MS B for ships) MS B/C FRP DR	CAIG/NCCA [2/]	CAIG/NCCA [2/]
LFT&E Report* [3/] RCS: DD-OT&E(AR)1845	Optional	**OSD LFT&E oversight programs only**	FRP DR	DOT&E	DOT&E via SECDEF
COMPONENT PREPARED					
Acquisition Program Baseline*	See DAG**	**I**	Pgm Initiation for Ships MS B/C (updated as nec) FRP DR	PM	MDA
Analysis of Alternatives (AoA)	Optional	**IA**	MS A MS B/FRP DR (or equiv)	Indep Activity	CAE/CNO/CMC
Assessment and Congressional Notification of a Certification for MAIS Critical Program Changes [4/]	Letter	**IA**	When a Senior Official (CAE, USD(AT&L), or ASD(NII)/DOD CIO) has formally reported a Critical program change	PM	CAE (after coordination with ASD(NII)/DOD CIO or USD(AT&L) when MAIS is above MDAP threshold)
Benefit Analysis and Determination (applicable to bundled acquisitions)	Acqn Strat	**I, IA, II, III, IV**	MS B MS C (if no MS B)	PM	MDA
Certification of compliance with the requirements of the Defense Business System (DBS) Management Committee (DBSMC) (see para 2.9.4)	DITPR-DON	**All IT ACAT & AAP DBS pgms & fielded IT DBSs**	Prior to obligating any development/ modernization funding when such cost > $1 million	PM	Pre-certification by DON CIO, certification by the Investment Review Board & final approval by DBSMC

* Not statutorily required for ACAT IA programs. **DAG is the Defense Acquisition Guidebook.
*** Information required at FRP DR is required at MS III for ongoing programs that were begun prior to the 23 Oct 00 version of DODI 5000.2 and were post-Milestone II as of 12 May 03.
1/ Statutory for ACAT I programs and those ACAT II, III, and IV pgms designated for OSD Test & Evaluation oversight.
2/ Naval Center for Cost Analysis (NCCA) in ASN(FM&C) is responsible when independent cost estimate (ICE) is not prepared by CAIG.
3/ Statutory for LFT&E programs and product improvements thereto.
4/ 10 U.S.C. Section 2445c defines a significant program change as either a schedule change that will cause a delay of more than 6 months, but less than a year; an increase in the estimated program development cost or full life-cycle cost for the program of at least 15%, but less than 25%; or a significant, adverse change in the expected performance of the MAIS to be acquired. A critical program change is defined as the system failed to achieve IOC within five years of Milestone A approval; a schedule change that will cause a delay of 1 year or more in any program schedule; an increase in the estimated program development cost or full life-cycle cost for the program of 25% or more; or a change in expected performance that will undermine the ability of the system to perform the functions anticipated.

Table E3T1 STATUTORY INFORMATION AND MILESTONE REQUIREMENTS (cont'd)					
Program Information and Reports	**Presenta-tion Form**	**ACAT**	**Applicability *****	**Prepared By**	**Approved By**
COMPONENT PREPARED (cont'd)					
Clinger-Cohen Act (CCA) Compliance (all information technology (IT) - including national security systems (NSS) programs)	See DODI 5000.2, Encl 4, Table E4T1	**I, IA, II, III, IV (IT, including NSS)**	MS A Pgm Initiation for Ships MS B MS C FRP DR or equivalent	PM (coordi-nated with DASN(C4I & Space) for ACAT I/IA/II)	DOD CIO (ACAT IA) DON CIO (ACAT I/IA/II) Cmd IO (ACAT III/IV)
Competition Analysis (Depot-level Maintenance $3M rule)	Acqn Strat	**I, IA, II, III, IV**	MS B MS C (if no MS B)	PM	MDA
Congressional Annual Notification of MAIS program cost, schedule, and performance information	Report to Congress	**IA**	Annually, 45 days after President's Budget is submitted to Congress after achieving MS B	PM	ASD(NII)/DOD CIO
Congressional Quarterly Notification of variances in MAIS program cost, schedule, and performance parameters [5/]	Report to Congress	**IA**	Quarterly following MS B	PM	Senior Official [5/]
Congressional Notification of a MAIS Significant Program Change [4/]	Letter	**IA**	Not later than 45 days after receiving a PM's report of a Significant program change	PM	CAE/Senior Official (after coordination with ASD(NII)/DOD CIO or USD(AT&L) when MAIS is above MDAP threshold)
Congressional Notification of a MAIS Program Cancellation or Significant Reduction in Scope	Letter	**IA**	60 days prior to an MDA decision to cancel or significantly reduce the scope of a fielded or post-MS C MAIS program	PM	ASD(NII)/DOD CIO
Consideration of Technology Issues	TDS (MS A) Acqn Strat	**I, IA, II, III, IV**	MS A/B/C	PM	MDA
Cooperative Opportunities	TDS (MS A) Acqn Strat	**I, IA, II, III, IV**	MS A MS B/C	PM	MDA
Core Logistics Analysis/ Source of Repair Analysis	Acqn Strat	**I, IA, II, III, IV**	MS B MS C (if no MS B)	PM	MDA
Data Management Strategy	Acqn Strat	**I, IA, II**	MS B/C FRP DR or equivalent	PM	MDA
Economic Analysis (EA)	Optional	**IA**	MS A (may be combined with AoA) MS B/FRP DR (or equivalent)	PM	PM
Industrial Capabilities*	Acqn Strat	**I, II, III, IV**	MS B/C	PM	MDA

* Not statutorily required for ACAT IA programs. **DAG is the Defense Acquisition Guidebook.
*** Information required at FRP DR is required at MS III for ongoing programs that were begun prior to the 23 Oct 00 version of DODI 5000.2 and were post-Milestone II as of 12 May 03.
4/ 10 U.S.C. Section 2445c defines a significant program change as either a schedule change that will cause a delay of more than 6 months, but less than a year; an increase in the estimated program development cost or full life-cycle cost for the program of at least 15%, but less than 25%; or a significant, adverse change in the expected performance of the MAIS to be acquired. A critical program change is defined as the system failed to achieve IOC within five years of Milestone A approval; a schedule change that will cause a delay of 1 year or more in any program schedule; an increase in the estimated program development cost or full life-cycle cost for the program of 25% or more; or a change in expected performance that will undermine the ability of the system to perform the functions anticipated.
5/ The Report to Congress shall identify any variance in the projected development schedule, implementation schedule, life-cycle costs, or Key Performance Parameters (KPPs) for the MAIS from such information as originally submitted to Congress in the first "Report to Congress of cost, schedule, and performance information" for this program. 10 U.S.C. Section 2445c refers to the Senior Official responsible for a MAIS program which is the USD(AT&L) or the Component Acquisition Executive (CAE).

Table E3T1 STATUTORY INFORMATION AND MILESTONE REQUIREMENTS (cont'd)					
Program Information and Reports	**Presenta-tion Form**	**ACAT**	**Applicability *****	**Prepared By**	**Approved By**
COMPONENT PREPARED (cont'd)					
Information Assurance Strategy (all IT - including NSS programs) per Public Law 106-398, Sec 811, Public Law 107-248, Sec 8088(c), DODI 5000.2, Table E4.T1.	DON CIO Template, see Encl (4), para 4.4	**I, IA, II, III, IV (IT, including NSS)**	MS A Pgm Initiation for Ships MS B MS C FRP DR or equivalent	PM	DON CIO (ACAT I/IA/II) Cmd IO (ACAT III/IV)
IOT&E Completed	ADM	**I, II (only conventional weapons systems that are major systems for use in combat)**	FRP DR	PM	MDA
LFT&E Waiver from Full-up, System-level Testing and Alternate LFT&E plan* 3/	MDA option	**OSD LFT&E oversight programs only**	MS B (or as soon as practicable after program initiation)	PM	USD(AT&L) (ACAT ID) CAE (ACAT IC/II/III/IV) DOT&E
LRIP Quantities*	ADM	**I, II**	MS B	PM	MDA
Manpower Estimate* (reviewed by OUSD(P&R))	See ref (e) sample format	**I**	MS B/C FRP DR	CNO/CMC	CNO/CMC
Market Research	TDS (MS A) Acqn Strat	**I, IA, II, III, IV**	MS A/B	PM	MDA
MDA Program Certification (see para 3.10)	Memorandum for the Record	**I**	MS A (ACAT I) MS B (ACAT I) (MS C if pgm initiation)	PM	MDA
Military Equipment Program Description	Acqn Strat	**I, IA**	MS C FRP DR or equivalent	PM	MDA
Nunn-McCurdy Assessment & Certification (see para 3.9.5)	Assessment memorandum and Congres-sional certifica-tion letter	**I**	Critical Unit Cost Breach (≥ 25 % increase over current APB objective or ≥ 50 % increase over original APB objective)	USD(AT&L) staff	USD(AT&L) Via ASN(RD&A)
Operational Test Plan*	OTA option	**I + OSD OT&E oversight programs only**	Prior to start of OT&E	OTA	DOT&E
Post Implementation Review	MDA option	**I, IA**	FRP DR (submit plan) IOC + 1 yr (assessment) 3 yr intervals (repeat) or as determined by MDA	PM	MDA
Program Deviation Report	PM option	**I, IA**	Immediately upon a program deviation	PM	PM
Programmatic Environment, Safety, & Occupational Health Evaluation (PESHE) (including NEPA/EO 12114 Compliance Schedule) (see Enclosure (7))	MDA option, Summary in Acqn Strat	**I, IA, II, III, IV**	Pgm Initiation for Ships MS B/C FRP DR	PM	PM (PESHE) MDA (Acqn Strat)

* Not statutorily required for ACAT IA programs. **DAG is the Defense Acquisition Guidebook.
*** Information required at FRP DR is required at MS III for ongoing programs that were begun prior to the 23 Oct 00 version of DODI 5000.2 and were post-Milestone II as of 12 May 03.
3/ Statutory for LFT&E programs and product improvements thereto.

Table E3T1 STATUTORY INFORMATION AND MILESTONE REQUIREMENTS (cont'd)					
Program Information and Reports	**Presenta-tion Form**	**ACAT**	**Applicability *****	**Prepared By**	**Approved By**
COMPONENT PREPARED (cont'd)					
Registration of mission-critical and mission-essential information systems RCS: DD-C3I(AR)2096	See DAG**	**I, IA, II, III, IV (all MC or ME IT systems - including NSS)**	Program Initiation (after initial registration, update quarterly)	PM	PM
Replaced System Sustainment Plan	Acqn Strat Optional	**I**	Pgm Initiation for Ships MS B	PM	PM
Selected Acquisition Report (SAR)- * RCS: DD-AT&L(Q&A)823	See DAG**	**I (MDAPs that are MAISs will not submit SARs, but will report under 10 U.S.C. 2445c)**	Pgm Initiation for Ships MS B, annually thereafter End of quarter following: MS C FRP DR Breach (schedule/cost)	PM	CAE/PEO/SYSCOM USD(AT&L)
Spectrum Certification Compliance [6/] (applicable to all systems/equipment that require use of the electromagnetic spectrum)	DD Form 1494	**I, IA, II, III, IV**	MS B [6/] MS C (if no MS B)	PM coordinate with USN-CNO(N6) USMC-HQMC(C4)	NTIA/MCEB [6/]
Technology Development Strategy (TDS)	MDA option	**potential I, potential IA, I, IA**	MS A MS B/C	PM	MDA
Unit Cost Report- * RCS: DD-AT&L(Q&R)1591	See para 3.9.5 See DAG**	**I**	Quarterly	PM	CAE/PEO/SYSCOM USD(AT&L)

* Not statutorily required for ACAT IA programs. **DAG is the Defense Acquisition Guidebook.
*** Information required at FRP DR is required at MS III for ongoing programs that were begun prior to the 23 Oct 00 version of DODI 5000.2 and were post-Milestone II as of 12 May 03.
6/ If spectrum certification compliance is initially obtained at Milestone B, the currency of the frequency allocation needs to be confirmed at Milestone C. National Telecommunications and Information Administration/Military Communications-Electronics Board (NTIA/MCEB).

Table E3T2 REGULATORY INFORMATION AND MILESTONE REQUIREMENTS					
Program Information and Reports	**Presenta-tion Form**	**ACAT**	**Applicability ****	**Prepared By**	**Approved By**
OSD/JOINT STAFF/DISA PREPARED					
Acquisition Decision Memorandum (MDA Program Certification required for ACAT ID programs at MSs A & B before ADM is signed)	MDA option	**ID, IAM**	Pgm Initiation for Ships MS A/B/C, Each Review	MDA staff	MDA
C4I Supportability Certification	Optional	**I, IA, II, III, IV (IT, including NSS)**	FRP DR	Joint Staff	Joint Staff (J-6)
Independent Technology Readiness Assessment	Optional	**ID (if required by DUSD(S&T))**	MS B/C	DUSD(S&T), or designee	DUSD(S&T)
Interoperability Certification	Optional	**I, IA, II, III, IV (IT, including NSS)**	FRP DR	DISA/JITC	Joint Staff (J-6)
COMPONENT PREPARED					
Acquisition Decision Memorandum (MDA Program Certification required for ACAT IC programs at MSs A & B before ADM is signed)	MDA option	**IC, IAC II, III, IV**	Pgm Initiation for Ships MS A/B/C, Each Review	MDA staff	MDA
Acquisition Program Baseline	See DAG*	**IA, II, III, IV**	Pgm Initiation for Ships MS B/C (updated as necessary) FRP DR	PM	MDA
Acquisition Strategy	MDA option	**I, IA, II, III, IV**	Pgm Initiation for Ships MS B/C, and FRP DR	PM	MDA
Affordability Assessment	Optional	**I, IA, II, III, IV**	Pgm Initiation for Ships MS B/C	CNO/CMC	CNO/CMC
Analysis of Alternatives Plan 7/	Optional	**I, IA, II, III, IV**	Concept Decision	Independent Activity	CAE/MDA/CNO/CMC
Analysis of Alternatives (AoA) 7/	Optional	**I, II, III, IV**	MDAPs/non-MDAPs Pgm Initiation for Ships MS A/B MS C (updated as necessary) non-MAISs MS A MS B/FRP DR (or equivalent)	Independent Activity	CAE/MDA/CNO/CMC
Component Cost Analysis	Optional	**IA I (CAE option)**	MDAPs (CAE option) Pgm Initiation for Ships MS B/FRP DR MAISs MS A/B/FRP DR	NCCA	NCCA
Component LFT&E Report	Optional	**OSD LFT&E oversight programs only**	Completion of LFT&E	DT&E Activity	DT&E Activity
Cooperative Opportunities	Acqn Strat	**IA**	MS B/C	PM	MDA

*DAG is the Defense Acquisition Guidebook
** Information required at FRP DR is required at MS III for ongoing programs that were begun prior to the 23 Oct 00 version of DODI 5000.2 and were post-Milestone II as of 12 May 03.
7/ CAE, or designee, co-approves ACAT ID/IAM and MDA, or designee, co-approves ACAT IC/IAC and below Analysis of Alternatives (AoA) Plan and AoA.

Table E3T2 REGULATORY INFORMATION AND MILESTONE REQUIREMENTS (cont'd)					
Program Information and Reports	**Presenta-tion Form**	**ACAT**	**Applicability ****	**Prepared By**	**Approved By**
COMPONENT PREPARED (cont'd)					
Cost Analysis Requirements Description [8/]	Optional see DODI 5000.2, Encl 6	**I and IA II (when an ICE is required)**	Pgm Initiation for Ships MS A (MAIS only) MS B/FRP DR MS C (MDAP only)	PM (coordi-nated with OSD CAIG (ACAT ID) and NCCA (ACAT IC/IA))	PEO/SYSCOM/DRPM
Defense Acquisition Executive Summary (DAES), RCS: DD-AT&L(Q)1429	See DAG*	**I, IA**	Quarterly Upon POM or BES submission Upon unit cost breach	PM	PM
DT&E Report [9/]	Optional	**I, IA, II, III, IV**	MS B/C and FRP DR	DT&E Activity	DT&E Activity
Earned Value Management Systems (EVMSs) [10/]	See DAG*, OMB Circular A-11, Part 7	**I, IA, II, III, IV**	Implement EVMS guidelines in ANSI/EIA-748 and conduct Integrated Baseline Reviews (IBRs) for cost or incentive contracts/agree-ments valued at or greater than $20 million in then-year dollars	Contractor implements EVMS PM conducts IBRs within 180 days of contract award, exercise of options, & major modifica-tions	PM
Exit Criteria	ADM	**I, IA, II, III, IV**	Pgm Initiation for Ships MS A/B/C Each Review	PM	MDA
Independent Cost Estimate/Assessment	MDA option	**II**	MS B/C FRP DR	SYSCOM/PEO Cost Estimating Office	SYSCOM/PEO Cost Estimating Office
Independent Logistics Assessment (ILA) and Logistics Certification	See ref (f)	**I, IA, II, III, IV**	MS B/C FRP DR	ILA team leader	ILA (ILA team leader) Logistics Certification (PEO/SYSCOM/DRPM)
Information Support Plan [11/] (also summarized in acquisition strategy)	See DAG*	**I, IA, II, III, IV (IT, including NSS**	Pgm Initiation for Ships MS B/C	PM	PEO/SYSCOM/DRPM, or designee
Initial Capabilities Document (ICD) [12/] Capability Development Document (CDD) Capability Production Document (CPD)	See CJCSM 3170 series	**I, IA, II, III, IV**	Concept Decision (ICD) MS A/B/C (if init) (ICD) Pgm Init - Ships (CDD) [12/] MS B (CDD) [12/] MS C (CPD) [12/]	Program Sponsor	JROC (JROC Interest) CNO/CMC (Joint Integration, Joint Information and Independent)

*DAG is the Defense Acquisition Guidebook.
** Information required at FRP DR is required at MS III for ongoing programs that were begun prior to the 23 Oct 00 version of DODI 5000.2 and were post-Milestone II as of 12 May 03.
8/ A Cost Analysis Requirements Description (CARD) shall be prepared prior to: the Independent Cost Estimate for ACAT I and II programs, the Program Life-Cycle Cost Estimate for ACAT I, IA, and II programs, and the Independent Cost Assessment for ACAT I Program Initiation for Ships pre-Milestone B.
9/ DT&E Report required for Milestone B if DT&E testing is accomplished prior to Milestone B.
10/ Cost or incentive contracts, subcontracts, or other agreements valued at or greater than $50 million in then-year dollars shall have an EVM system that has been formally validated and accepted by the cognizant contracting officer.
11/ Information Support Plan per CJCSI 6212.01D is only required for IT, including NSS, programs that interconnect to the communications and information infrastructure.
12/ A system of systems ICD may satisfy ICD requirement for Concept Decision for potential ACAT II, III, and IV programs. JROC Interest and Joint Integration CDDs and CPDs require interoperability and supportability certification by Joint Staff (J-6) prior to approval at Milestones B and C, respectively.

Table E3T2 REGULATORY INFORMATION AND MILESTONE REQUIREMENTS (cont'd)					
Program Information and Reports	**Presenta-tion Form**	**ACAT**	**Applicability ****	**Prepared By**	**Approved By**
COMPONENT PREPARED (cont'd)					
Manpower Estimate [13/]	See ref (e) sample format	**IA, II, III, IV**	MS B/C FRP DR	CNO/CMC	CNO/CMC
Operational Test Agency Report of OT&E Results	Optional	**I, IA, II, III, IVT**	MS B/C FRP DR	OPTEVFOR MCOTEA	OPTEVFOR MCOTEA
Operational Test Plan	OTA option	**IA + DOT&E oversight pgms**	Prior to start of OT&E	OTA	DOT&E
Program Deviation Report	PM option	**IA, II, III, IV**	Immediately upon a program deviation	PM	PM
Program Life-Cycle Cost Estimate	MDA option	**I, IA, II, III, IV**	Pgm Initiation for Ships MS B/C, and FRP DR	PM or SYSCOM Cost Estimating Office	PM
Program Protection Plan (for programs with critical program information or critical technology) (includes Anti-Tamper Annex) (also summarized in acquisition strategy)	Optional	**I, IA, II, III, IV**	MS B (based on approved requirements in CDD) MS C	PM (Annex requires CHSENG's technical concurrence)	PM
Risk Assessment	TDS (MS A) Acqn Strat	**I, IA, II, III, IV**	Pgm Initiation for Ships MS A/B/C, and FRP DR	PM	MDA
Systems Engineering Plan [14/]	See SEP prep guide [14/]	**I, IA, II, III, IV**	Pgm Initiation for Ships MS A/B/C	PM	MDA (ACAT ID/IAM/III/IV) CHSENG (ACAT ID/IAM/ IC/IAC/II/special interest)
System Threat Assessment (Information technology programs use published Capstone Information Operations System Threat Assessment)	Optional	**I, IA, II, III, IV**	Pgm Initiation for Ships MS B/C	Intell Activity (ONI or MCIA)	Intell Activity (ONI or MCIA) DIA validates ACAT ID
Technology Readiness Assessment	CNR option	**I, IA, II, III, IV**	Pgm Initiation for Ships (preliminary assessment pre-MS B for ships) MS B/C	ONR (ACAT I/IA/II) with PM support PM (ACAT III/IV)	CNR (ACAT I/IA/II) PEO/SYSCOM (ACAT III/IV)
Test and Evaluation Master Plan [15/]	see DAG*	**I, IA, II, III, IV**	MS A (Test and Evaluation Strategy only) MS B MS C (update, if necessary) FRP DR	PM OPTEVFOR MCOTEA	CNO/CMC [15/] CAE/MDA DOT&E/Cognizant OIPT Leader
Training System Plan	see footnote [16/]	**I, IA, II, III, IV**	MS B (preliminary) Phase B midpoint (final) MS C (update, if necessary)	PM	CNO/CMC

*DAG is the Defense Acquisition Guidebook.
** Information required at FRP DR is required at MS III for ongoing programs that were begun prior to the 23 Oct 00 version of DODI 5000.2 and were post-Milestone II as of 12 May 03.
13/ Manpower estimates shall be developed for all manpower significant programs regardless of ACAT at the request of the Component Manpower Authority (e.g., programs with high personnel or critical skill requirements).
14/ See the SEP Preparation Guide, ver 2.01, Apr 08, at http://www.acq.osd.mil/sse/guidance.html
15/ CAE and CNO (N091)/ACMC approve TEMPs for DON for ACAT I, IA, and II programs and all programs on the OSD T&E Oversight List. MDA and CNO/CMC, or designee, approve TEMPs for DON for ACAT III and IVT programs. MDA approves TEMPs for DON for ACAT IVM programs. DOT&E and cognizant OIPT Leader approve TEMPs for programs on the OSD T&E Oversight List. TEMPs may be tailored as appropriate for ACAT IVM programs.
16/ Mandatory format for the Navy Training System Plan is in OPNAVINST 1500.76A. Mandatory format for the Marine Corps Manpower, Personnel, and Training Plan is the Marine Corps Systems Command format.

Table E3T3 CONTRACT REPORTING INFORMATION REQUIREMENTS					
Program Information and Reports	**Presenta-tion Form**	**ACAT**	**Applicability**	**Prepared By**	**Submitted To**
COMPONENT PREPARED					
Contractor Cost Data Report (CCDR) Contract Performance Report (CPR) Integrated Master Schedule (IMS) Contract Funds Status Report (CFSR)	CAIG format DI-MGMT-81466A DI-MGMT-81650 DI-MGMT-81468	**I, IA** **I, IA, II, III, IV** **I, IA, II, III, IV** **I, IA, II, III, IV**	•All cost or incentive contracts and subcontracts valued at or greater than $50 million for CCDRs and validated EVMS ($20 million for non-validated EVMS) (then-year dollars). •The CCDR, CPR, IMS, and CFSR requirement on high-risk or high-technical-interest cost or incentive contracts valued at less than $20 million (between $20 and $50 million for CCDRs) is left to the discretion of the PM •Not required for procurement of commercial systems, or for non-commercial systems bought under competitively awarded, firm fixed-price contracts, as long as competitive conditions continue to exist	Contractor Contractor Contractor Contractor	PM (applicable ACATs) OSD's Defense Cost and Resource Center (DCARC) for ACAT I programs only
Software Resources Data Report (SRDR)	CAIG format	**I, IA (CAIG may waive)**	All contracts and subcontracts, regardless of contract type, for contractors developing/ producing elements within ACAT I and IA programs for any software development element with a projected software effort greater than $20 million (then-year dollars). Submit data on each software element at the following times: - 180 days prior to contract award - 60 days after contract award - 60 days after start of subsequent software release - within 120 days after software release or final delivery	PM (pre-contract award format coordina-tion with CAIG and estimated cost of development and production of each software element) Contractor (post-contract award report of the cost of development and production of each software element)	DCARC PM DCARC

3.2 Exit Criteria

For each acquisition phase, established exit criteria shall be met and demonstrated prior to entrance into the next phase. Reference (b), enclosure 3, requires MDAs for all ACAT programs to establish exit criteria in Acquisition Decision Memorandums (ADMs) issued following milestone reviews and other key decision reviews. Exit criteria need not be part of the acquisition program baseline.

3.3 Technology Maturity

PMs shall ensure technology readiness assessments (TRAs) are conducted. PMs shall request the Office of Naval Research (ONR) conduct TRAs for ACAT I, IA, and II programs with support from the respective PM. PMs shall conduct TRAs for ACAT III and IV programs. TRAs are required for Milestones B and C. A preliminary TRA is required for ship programs that have program initiation at Milestone A. The TRA Deskbook provides suggested methods for conducting the TRA. ONR will provide amplifying information and guidance as required. The TRA shall be conducted on critical technologies as determined by the PM in coordination with the Chief of Naval Research (CNR). A technology is defined as "critical" if the system being acquired depends on that technology to meet its Capability Development Document (CDD) and Capability Production Document (CPD) requirements.

The CNR, as the Department of the Navy (DON) Science and Technology (S&T) Executive, shall approve TRAs for ACAT I, IA, and II programs. CNR shall submit TRAs for ACAT I, IA, and II programs to ASN(RD&A) after discussion with the respective PEO, SYSCOM Commander, or DRPM and PM. TRAs for ACAT ID and IAM programs shall be submitted to the Deputy Under Secretary of Defense (Science and Technology) (DUSD(S&T)) via ASN(RD&A). DUSD(S&T) may conduct an independent TRA for ACAT ID programs.

PEOs and SYSCOM Commanders, or their designees, as well as DRPMs shall approve TRAs for ACAT III and IV programs.

See reference (b), paragraphs 3.4 and 3.7.2.2, for implementation requirements for all DON ACAT programs.

3.4 Technology Development and Acquisition Strategies

3.4.1 General Considerations for a Technology Development Strategy and an Acquisition Strategy

The technology development and acquisition strategies will normally be competitive unless sole source is justified to meet the urgent needs of the warfighter and by the Federal Acquisition Regulation (FAR) and Defense FAR Supplement (DFARS). Per ASN(RD&A) memorandum of 27 November 2007 and its attached USD(AT&L) memorandum of 19 Jul 07, the technology development strategy for the technology development phase and the acquisition strategy for the System Development and Demonstration (SDD) phase for pre-ACAT I and ACAT I programs shall provide for competitive prototypes of key systems and/or subsystems through Milestone B and be sustained thereafter where the benefits warrant the investment. These prototypes are to be used to demonstrate critical technologies in a relevant environment. PMs for all DON ACAT I programs shall ensure language is included in the Request for Proposal (RFP) for the SDD phase efforts advising offerors that (1) the government will not award a contract to an offeror whose proposal is based on critical technology elements that have not been demonstrated on prototypes in a relevant environment, and (2) that offerors will be required to specify the technology readiness level of the critical technology elements on which their proposal is based and to provide reports documenting how those critical technology elements have been demonstrated in a relevant environment. PMs for all DON ACAT programs shall develop an acquisition strategy implementing a total systems engineering approach per references (a) and (b). For ACAT IC, IAC, and II programs, the PM shall develop the acquisition strategy in coordination with the Acquisition Coordination Team (ACT). The ACT is described in enclosure (2), paragraph 2.3.2. The MDA shall approve a technology development strategy or an acquisition strategy, as appropriate, prior to the release of the formal solicitation for the respective acquisition phase.

The acquisition strategy shall describe how the PM plans to employ contract incentives to achieve required cost, schedule, and performance outcomes. The acquisition strategy for an ACAT I development program shall provide for contract type selection by the MDA at Milestone B per Public Law 109-364 of 17 Oct 06 Section 818 (FY 2007 National Defense Authorization Act). The contract type shall be consistent with the level of program risk and may be either a fixed-price or cost type contract. The MDA may authorize a cost type contract only upon written determination that (a) the program is so complex and technically

challenging that it would not be practicable to reduce program risk to a level that would permit the use of a fixed-price contract, and (b) the complexity and technical challenge of the program is not the result of a failure to meet the requirements of 10 U.S.C. Section 2366a. The MDA's written determination shall include an explanation of the level of program risk, and if the MDA determines that the program risk is high, the steps that have been taken to reduce program risk and the reasons for proceeding with acquisition strategy approval and/or Milestone B despite the high level of program risk.

If the technology development strategy or acquisition strategy for a major system calls for a lead system integrator, the MDA shall ensure that a contract is not awarded to an offeror that either has or is expected to acquire a financial interest in the development or construction of an individual system or an element of any System of Systems (SoS). Exceptions may be granted as provided in 10 U.S.C. Section 2410p that requires certification to the Committees on Armed Services of the Senate and House of Representatives.

The Gate 5 review of enclosure (2), paragraph 2.11.4.3.1.1, ensures that the Service has completed needed actions and recommends to the MDA approval of the release of the SDD RFP to industry as authorized by the acquisition strategy.

3.4.2 Requirements/Capability Needs

User requirements/capabilities needs for an acquisition shall be briefly synopsized in an acquisition strategy and are described in enclosure (2), paragraph 2.1.

3.4.3 Program Structure

Each acquisition strategy shall include a program structure, the purpose of which is to identify in a top-level schedule the major program elements such as program decision points, acquisition phases, test phases, contract awards, and delivery phases.

3.4.4 Risk

Plans for assessing and mitigating program risk shall be summarized in the acquisition strategy. PMs, utilizing SYSCOM engineering and logistics technical authority expertise, shall conduct a risk assessment identifying all technical, cost, schedule, and performance risks. In conjunction with the risk

assessment, plans for mitigating those risks shall be completed prior to each milestone decision and the Full-Rate Production Decision Review (FRP DR). PMs for all DON programs shall, for the purpose of reducing or mitigating program risk, research and apply applicable technical and management lessons-learned during system development, procurement, and modification.

3.4.4.1 Interoperability and Integration Risk

For programs that are part of an SoS or FoS, the risk management strategy shall specifically address integration and interoperability as a risk area. The PM shall make use of Navy technical databases for Fleet integration and interoperability issues and assigned risks. The risk assessment for such programs that are part of a SoS or FoS shall include the following:

1. Identification of interoperability, net-centricity, and integration risks and actions needed for sufficient mitigation.

2. Assessment of the risk in the program's ability to meet its Net-Ready Key Performance Parameter (NR KPP) threshold.

For ACAT I, IA, and II programs and applicable ACAT III and IV programs that are designated by ASN(RD&A) for integration and interoperability special interest, risk assessment planning shall be coordinated with ASN(RD&A) Chief Systems Engineer (CHSENG) six months prior to program decision briefings. Developed risk assessments and mitigation plans for such programs shall be submitted to ASN(RD&A) CHSENG no later than 30 calendar days prior to program decision briefings. ASN(RD&A) CHSENG shall advise ASN(RD&A) and the PM of the adequacy of the PM's integration and interoperability risk assessment and risk mitigation plan.

3.4.5 Program Management

The acquisition strategy shall be developed in sufficient detail to establish the managerial approach that shall be used to achieve program goals. PMs who have or use government property in the possession of contractors (GPPC) shall have a process in place to ensure the continued management emphasis on reducing GPPC and preventing any unnecessary additions of GPPC.

3.4.6 Design Considerations Affecting the Acquisition Strategy

3.4.6.1 Open Architecture

Naval open architecture precepts shall be applied across the Naval Enterprise as an integrated technical approach and used for all systems, including support systems, when developing an acquisition strategy per ASN(RD&A) memorandum of 5 August 2004 and CNO (N6/N7) memorandum of 23 December 2005 with enclosure (1).

3.4.6.2 Interoperability and Integration

For programs that are part of a SoS or FoS, interoperability and integration shall be a major consideration during all program phases per reference (g). All programs shall implement data management and interoperability processes, procedures, and tools, per reference (h), as the foundation for information interoperability.

3.4.6.2.1 Integrated Architecture

All DON new start IT systems, including NSS, that exchange information with external systems shall comply with NR KPP and FORCEnet integrated architecture and other elements of the FORCEnet Consolidated Compliance Checklist (FCCC) guide as described by the CDD at program initiation (normally Milestone B). These new start systems will be eligible for inclusion in SoS or FoS integration and interoperability validation efforts. The process described in enclosure (2), paragraph 2.1.2.5, shall be the means of deciding if legacy systems are to be compliant.

PMs of IT, including NSS, programs shall implement as soon as possible the applicable technical standards that satisfy CDD/CPD requirements and do not require additional funding or adversely affect program execution.

3.4.6.3 Aviation Critical Safety Items

The Naval Air Systems Command is designated the aviation design control activity as required by references (i), (j), and (k). As such, it is responsible for establishing processes to identify and manage the procurement, repair, modification, and overhaul of aviation critical safety items (CSIs).

PMs of aviation or ship-air integration systems shall summarize the aviation CSI approach in the acquisition strategy. The approach shall ensure that design, contracting, and support strategies address the proper and timely identification, technical documentation, marking or serializing and tracking, procurement, support, and disposal of aviation CSIs per references (i), (j), and (k). Logistics support organizations shall ensure that aviation CSIs are properly catalogued and that approved sources of supply are identified by the design control activity. Contracting activities shall only award contracts for the procurement of aviation CSIs or for the modification, repair, or overhaul of aviation CSIs to sources approved by the Naval Air Systems Command. Furthermore, all aviation CSIs or modifications/repair/overhaul services shall meet all technical and quality requirements specified by the Naval Air Systems Command.

3.4.6.4 Information Assurance

Information assurance (IA) requirements shall be identified and included in the design, acquisition, installation, operation, upgrade, and replacement of all DON information systems per 10 U.S.C. Section 2224, Office of Management and Budget Circular A-130, and reference (b). PMs shall develop an IA Strategy and summarize the IA Strategy in the program's overall acquisition strategy (for further information on developing an IA Strategy, see enclosure (4), paragraph 4.4).

3.4.6.5 Standardization and Commonality

Common systems can provide efficiencies that include inherently greater interoperability, lower total ownership costs, improved human performance, consistent and integrated roadmaps for system evolution, and planned dual-use functions. Acquisition strategies shall identify common systems integrated into the acquisition program.

10 U.S.C. Section 2451, Defense supply management, directs the DoD to standardize supplies to the highest degree practicable by reducing the number of sizes and kinds of items that are generally similar. PMs shall describe in their acquisition strategy the process to evaluate and use standard parts and equipment that meet system performance requirements rather than program-unique items. Standard parts and equipment are those currently in the DoD inventory or produced in accordance with nationally recognized industry, international, federal, or military specifications and standards.

3.4.7 Support Strategy

Support planning shall show a balance between program resources and schedule so that systems are acquired, designed, and introduced efficiently to meet CDD/CPD and APB performance design criteria thresholds. The PM as the life-cycle manager, designated under the tenets of Total Life Cycle Systems Management (TLCSM), shall document the product support strategy in the acquisition strategy. Performance Based Logistics (PBL) is the preferred support strategy and method of providing weapon system logistics support. A comprehensive business case analysis will be the basis for selecting a support strategy and reflecting the associated tradeoffs (e.g., between performance, technical, business, organic/commercial considerations). A program level PBL implementation plan shall be developed for all programs using a PBL support strategy.

The support strategy of the acquisition strategy shall address not only the support strategy of the new system, but also the support strategy for sustaining the replaced system. Prior to beginning development of an ACAT I program, the PM of the replaced system shall prepare a Replaced System Sustainment Plan required by 10 U.S.C. Section 2437 that shall be included as part of the acquisition strategy for the new system, or as a separate, stand-alone Replaced System Sustainment Plan, or included in a discretionary Logistics Supportability Plan for the replaced system (see paragraph 7.1.3). The Sustainment plan shall provide for the budgeting to sustain the existing system until the new system assumes the majority of mission responsibility. The Sustainment Plan shall include the schedule for developing and fielding the new system, and include an analysis of the ability of the existing system to maintain mission capability against relevant threats.

3.4.7.1 Human Systems Integration (HSI)

The acquisition strategy shall summarize HSI planning, including how the program will meet HSI programmatic requirements and standards. It shall describe how the system will optimize human performance by meeting the needs of the human operators, maintainers, and support personnel. This includes Manpower, Personnel, and Training (MPT), human factors engineering, personnel survivability, habitability, safety, occupational health, and environmental considerations.

3.4.7.2 Environmental, Safety, and Occupational Health (ESOH) Considerations

References (b) and (l) require integration of system safety and ESOH risk management into the overall systems engineering and risk management process consistent with Military Standard (MIL-STD) 882. MIL-STD 882 provides procedures to identify all ESOH hazards and provides a process to eliminate, mitigate, or accept risk.

The acquisition strategy shall incorporate a summary of the Programmatic ESOH Evaluation (PESHE), including ESOH hazards and associated risks and proposed mitigation plans, a strategy for integrating ESOH considerations in the systems engineering process, identification of ESOH responsibilities, a method for tracking progress, and a schedule for National Environmental Policy Act (NEPA) (42 U.S.C. Sections 4321-4370d) and Executive Order 12114 compliance for events or proposed actions throughout a program's life-cycle. See enclosure (3), Table E3T1, and enclosure (7), paragraph 7.3.

3.4.7.3 Demilitarization and Disposal Planning

PMs shall plan for end of life-cycle demilitarization and disposal including munitions disposition per references (b) and (m).

3.4.7.4 Post Deployment Performance Review

The acquisition strategy shall address the statutory requirement for a post deployment performance review for ACAT I and IA programs.

3.4.7.5 Program Protection Planning

Program protection plans for programs with Critical Program Information (CPI) and critical technologies shall address the minimum requirements in reference (b), paragraph 3.4.2, prior to Milestone B. Reference (n) provides specific guidance on program protection planning. Per ASN(RD&A) memorandum of 20 February 2008, PMs shall use the Standard Operating Procedures (SOP) for the Standardized Critical Program Information Identification Process in Department of Navy Acquisition Programs, Version 1.01, of 26 September 2007 to identify CPI in all acquisition programs.

Critical Infrastructure Protection (CIP) should be addressed throughout the acquisition phases through vulnerability assessments per reference (o). These vulnerability assessments shall be conducted prior to milestone decision points for any infrastructure items, public or private, deemed to be critical to the production or sustainment of weapon systems deemed critical to DON force and materiel readiness and operations in peacetime, crisis, and wartime.

3.4.8 Business Strategy

3.4.8.1 International Cooperation*

PMs for DON ACAT programs shall consult with the Navy International Programs Office (IPO) during development of the international element of the program's acquisition strategy to obtain:

1. Relevant international programs information.

2. ASN(RD&A) policy and procedures regarding development, review, and approval of international armaments cooperation programs.

3. DON technology transfer policy.

See the Defense Acquisition Guidebook for implementation guidance for all DON ACAT programs.

*Not normally applicable to IT programs.

3.4.8.1.1 International Cooperative Strategy

DON PMs and/or PEOs considering international cooperation should consult with the Navy IPO to develop a strategy.

The acquisition strategy shall discuss the potential for increasing, enhancing, and improving our conventional forces and those of our allies, including reciprocal defense trade and cooperation, and international cooperative research, development, production, and logistics support. The acquisition strategy shall also consider the possible sale of military equipment.

The acquisition strategy should also consider security, information release, technology transfer issues, bilateral versus multilateral cooperation, harmonization of military requirements,

bilateral test and evaluation, and potential involvement of foreign industry and/or technology in the DON program.

3.4.8.1.2 International Interoperability

PEOs and/or PMs should be cognizant of the potential interoperability benefits resulting from international cooperation and sales to international partners.

The use of same or similar equipment, systems, or protocols resulting from cooperative development, production, or support of weapons systems contributes to overarching interoperability and coalition warfare goals with allies and friendly foreign nations, and should be a key factor when considering the merits of entering into an international cooperative relationship.

3.5 Intelligence Support*

Life-cycle threat assessment and intelligence support for ACAT I, II, III, and IV programs shall be provided by the Office of Naval Intelligence (ONI) per reference (p) or by the Marine Corps Intelligence Activity.

*Normally not applicable to IT programs.

3.6 Command, Control, Communications, Computers, and Intelligence (C4I)/Information Support

PMs shall develop Information Support Plans (ISPs) (formerly the C4I Support Plans (C4ISPs)) for those IT, including NSS, ACAT programs that connect in any way to the communications and information infrastructure. ISPs are to be developed per the requirements in reference (b).

ASN(RD&A) CHSENG, in conjunction with appropriate Deputy Assistant Secretaries of the Navy (DASNs (RD&A)) and the DON Chief Information Officer (CIO), shall review ISPs for IT, including NSS, ACAT I and IA programs, and IT, including NSS, special interest programs designated by the Assistant Secretary of Defense (Networks and Information Integration) (ASD(NII)) that connect to the communications and information infrastructure. ISPs for such programs will be forwarded by ASN(RD&A) CHSENG to ASD(NII), Defense Information Systems Agency (DISA), and the Joint Staff (J-6) for review via the Joint C4I Program Assessment Tool-Empowered (JCPAT-E) per reference (q). After approval, IT, including NSS, ISPs are to be entered into the JCPAT-E repository

for retention. ISPs shall be approved by the cognizant PEO, SYSCOM Commander, DRPM, or designee, upon completion of the coordination and review process. Should interoperability issues arise between IT, including NSS, ACAT I or IA programs and less than IT, including NSS, ACAT I or IA programs, PMs shall, if requested, provide ISPs to ASN(RD&A) CHSENG to support issue resolution.

An MDA may grant a waiver of the requirement for an ISP for IT, including NSS, programs, with ASD(NII)'s concurrence, per reference (q) when the requirement for JCIDS documentation has been waived.

3.7 Electromagnetic Environmental Effects (E3) and Electromagnetic Spectrum Certification and Supportability

The following paragraphs contain policy and procedures for implementing E3 and electromagnetic spectrum certification and supportability for Navy and Marine Corps programs per references (r), (s), and (t). These policies and procedures ensure that communications and electronic systems are designed to be survivable and mutually compatible with other electronic equipment and the operational electromagnetic environment, and are spectrum certified. Additional information and guidance on the implementation of E3 and spectrum supportability requirements are available in both the Defense Acquisition Guidebook and the DON Acquisition and Capabilities Guidebook, and also MIL-HDBK-237D.

3.7.1 E3

E3 design requirements for communications and electronics systems and equipments shall be identified in performance specifications during the acquisition process and integrated into all developmental and operational tests per references (r) and (s). Tailorable platform level E3 performance requirements are specified in MIL-STD-464, and subsystem/equipment level electromagnetic interference performance requirements are documented in MIL-STD-461.

3.7.2 Electromagnetic Spectrum Certification and Supportability

Electromagnetic spectrum certification (i.e., equipment frequency allocation) and supportability shall be initiated as soon as possible in a program's life-cycle and shall be obtained not later than Milestone B (or Milestone C if there is no

Milestone B). Currency of frequency allocation and supportability shall be confirmed at each subsequent milestone.

Before Milestone B (or before the first milestone that authorizes contract award), if the system or equipment is spectrum-dependent and has not yet obtained certification of spectrum support from the National Telecommunication and Information Administration (NTIA) and the Military Communications-Electronics Board (MCEB) to proceed into the SDD phase, the PM shall develop a justification and a proposed plan to obtain spectrum support certification. Reference (r) requires the MDA and DoD CAE to provide such a justification and proposed plan to the USD(AT&L), the ASD(NII)/DoD CIO, the Director, Operational Test and Evaluation (DOT&E), and the Chair, MCEB.

Before Milestone C, if the system is spectrum-dependent and has not yet obtained the spectrum support certification required to allow the system to proceed into the Production and Deployment phase, the PM shall develop a justification and a proposed plan to obtain certification. Reference (r) requires the MDA and the CAE to provide such a justification and proposed plan to the USD (AT&L), ASD(NII)/DoD(CIO), the DOT&E, and the Chair, MCEB.

3.7.2.1 Electromagnetic Spectrum Certification Compliance

Spectrum certification requires coordination of the DD Form 1494 with CNO (N6) for Navy programs and with HQMC (C4) for Marine Corps programs. The DD Form 1494 is then submitted to the Navy and Marine Corps Spectrum Center for approval by the NTIA and the MCEB. PMs shall obtain approval of DD Form 1494 prior to Milestone B, and confirm currency of the frequency allocation at each subsequent milestone.

3.7.2.2 Electromagnetic Spectrum Supportability

Electromagnetic spectrum supportability is obtained via approval of Electromagnetic Spectrum Supportability Assessment Factors, listed in Table E3T4, by ASN(RD&A), or designee, for ACAT I, IA, and II programs, and by the MDA for ACAT III and IV programs. PMs shall ensure the items indicated in the table are completed prior to the appropriate milestone as noted in Table E3T1 under the "Spectrum Certification Compliance" row. Additionally, PMs shall complete supportability assessment factors of Table E3T4 prior to award of a contract for acquisition of any system that employs the electromagnetic spectrum.

Table E3T4 Electromagnetic Spectrum Supportability Assessment Factors	
Assessment Factors	**Applicable Program Information**
Confirm that the system has obtained electromagnetic spectrum certification	DD Form 1494
Confirm that the cost of electromagnetic spectrum supportability has been included in the program life-cycle cost estimate (PLCCE) and the economic analysis (EA) for MAIS	PLCCE EA for MAIS
Confirm that the proposed frequency allocation and its application have been addressed in the applicable program information and are in compliance with Global Information Grid policies, architecture, and interoperability standards	APB (NR KPP) IA Strategy C4I Support Plan/Information Support Plan (information exchange requirements (IERs)/NR requirements)
Specify the geographic location where the equipment will be deployed. Assess technical, cost, and schedule risk for any restrictions or barriers for use of the equipment in the specified geographic location	DD Form 1494 ICD/CDD/CPD Risk Assessment
Confirm that the system has been included in the DoD IT Portfolio Repository – DON (DITPR-DON)	DITPR-DON

3.8 Technology Protection

Each DON program that contains critical program information or critical technology shall prepare a Program Protection Plan (PPP) per references (n) and (u). PPPs shall include a PM-approved classified Anti-Tamper (AT) annex that has Naval Air Systems Command's (NAVAIRSYSCOM's) technical concurrence as DON's AT Technical Authority. ASN(RD&A) CHSENG is the DON point-of-contact for DoD and DON AT policy matters and for working with the DoD AT Executive Agent.

CNO (N2, N3/N5, and N6) shall provide operations security (OPSEC) and OPSEC enhancement planning guidance during ICD review. CNO (N2, N3/N5, and N6) shall coordinate guidance preparation and shall assist the PM's staff in subsequent OPSEC and program protection planning involving critical program information. Detailed policy and procedures are found in reference (u).

3.9 Periodic Reporting

Periodic reports are status reports provided during acquisition phases. They serve to inform the MDA as to cost, schedule, and technical performance status. See reference (b) and this instruction, enclosure (3), Tables E3T1 and E3T2, for implementation requirements.

3.9.1 Program Plans

In some cases, program plans are mandatory and are program decision point documents that are included in the statutory and regulatory information and milestone requirements tables of this instruction, enclosure (3), Tables E3T1 and E3T2.

Mandatory program plans are the TEMP; Operational Test Plan; Information Support Plan (formerly the C4I Support Plan) (for programs that interconnect to the communications and information infrastructure); Program Protection Plan (PPP) (for programs that have critical program information (CPI)); Training System Plan (TSP) (see reference (v) for the Navy TSP); Systems Engineering Plan (SEP), and Diminishing Manufacturing Sources and Material Shortages (DMSMS) Plan (for programs that include embedded microelectronics) per ASN(RD&A)) memorandum of 27 January 2005 (the DMSMS Plan is an acquisition phase program plan, not a milestone program plan required by Table E3T2). A Unique Identification Program Plan is required by USD(AT&L) memorandum of 23 December 2004.

PMs shall approve program plans, except for the TEMP, Operational Test Plan, TSP, AoA Plan, Systems Engineering Plan, and Information Support Plan/C4I Support Plan. Approval authority for these documents is stated in Tables E3T1 and E3T2. Specific SEP development, review, and approval guidance is provided in ASN(RD&A) memorandum of 16 November 2007. SEP developmental guidance is also provided in the USD(AT&L) SEP Preparation Guide version 2.01 of April 2008.

The Acquisition Plan (AP) is a procurement document that is required prior to contract award, not an acquisition program milestone document. The AP is mandatory for procurements above the dollar thresholds established by the DFARS.

3.9.2 Acquisition Program Baseline (APB) Reporting

All ACAT programs shall have APBs per Tables E3T1 and E3T2. The APB shall record program objectives and thresholds for each cost, schedule, and performance parameter (KPP, KSA, and other). Cost parameters are based on the program's life-cycle cost estimate as approved by the MDA. Schedule parameters are derived from the program's planned overall schedule approved by the MDA as part of the acquisition strategy. Performance parameters are identified in the CDD and CPD.

Program deviations from approved APB cost, schedule, and performance parameters shall be reported to the MDA within 30 days of a breach via a Program Deviation Report (PDR). Breaches shall be resolved within the existing APB threshold(s) within 90 days or, if resolution cannot be obtained within that time, an APB revision shall be approved by the MDA. The PM shall report the current estimate of each APB parameter periodically to the MDA. The PM shall report the current APB estimates for ACAT I and IA programs quarterly in the DAES.

The original and current APB shall be established and revised under the following conditions per 10 U.S.C. Section 2435 and 10 U.S.C. Section 2433:

1. The original APB is established at program initiation.

2. The current APB shall be revised at subsequent milestones and at FRP DR.

3. The current APB may be revised due a major program restructure that is fully funded and approved by the MDA or if the MDA determines that a cost, schedule, or performance breach is due to external causes beyond the control of the PM.

4. The current APB for ACAT I programs shall be revised when there is a significant Nunn-McCurdy unit cost breach as defined in paragraph 3.9.5.

5. The current and original APB for ACAT I programs shall be revised to form a "new original" APB that reflects the Nunn-McCurdy certification approved by the MDA when there is a critical Nunn-McCurdy unit cost breach as defined in paragraph 3.9.5.

6. The current APB may be revised as determined by the MDA; however, multiple revisions to the current APB will not be authorized, and in no event will a revision to the current APB be authorized if proposed merely to avoid a reportable breach.

3.9.3 Defense Acquisition Executive Summary (DAES) -- (DD-AT&L(Q)1429)

DAES monthly charts and information are required for ACAT I and IA programs. The DAES monthly charts shall be submitted to ASN(RD&A) no later than the 20th of each month, and the quarterly information shall be inputted into Dashboard for ASN(RD&A) review no later than the 20th day of the program's designated quarterly

reporting month. Data will be electronically provided from Dashboard to USD(AT&L)'s Defense Acquisition Management Information Retrieval (DAMIR) System by the 28th of each month.

3.9.4 Selected Acquisition Report (SAR) -- (DD-AT&L(Q&A)823)*

The Secretary of Defense is required to submit to Congress a SAR for each ACAT I MDAP. Waivers may be granted by the USD(AT&L) for certain pre-Milestone B programs that do not have an approved Acquisition Program Baseline. The SAR provides to Congress standard, comprehensive summary reporting of cost, schedule, and performance information on each ACAT I program. The annual SAR report, covering the period ending 31 December, shall be submitted to ASN(RD&A) no later than the 15th day after the President sends the budget to Congress.

Quarterly SARs, which are submitted on an exception basis, shall be forwarded no later than the 15th day after the end of the reporting quarter. Exception SAR reporting is required for programs when: 1) the current estimate exceeds the APB objective for the Program Acquisition Unit Cost or the Average Procurement Unit Cost by 15 percent or more; 2) the current estimate includes a six-month or greater delay, for any APB schedule parameter, that has occurred since the current estimate reported in the previous SAR; or 3) Milestone B or Milestone C approval occurs within the reportable quarter.

Data will be electronically submitted into USD(AT&L)'s DAMIR System for each annual and quarterly SAR. Final SAR content shall be as specified by the USD(AT&L) and ASN(RD&A). Classified annual SARs and quarterly SARs shall be handled as working papers until approved and published by USD(AT&L).

*Not applicable to ACAT IA programs.

3.9.5 Unit Cost Reports (UCRs) -- (DD-AT&L(Q&R)1591)*

UCRs apply to all SAR reporting programs. See the Defense Acquisition Guidebook for implementation guidance. Notification of unit cost threshold breaches shall be made immediately, via the chain of command, to ASN(RD&A).

PMs shall immediately submit a unit cost threshold breach notification for ACAT I programs via the chain of command to ASN(RD&A), whenever the PM has reasonable cause to believe that a significant cost growth has occurred per 10 U.S.C. Section 2433.

Notifications should include a cover memorandum explaining the breach.

If ASN(RD&A) determines that there is a significant cost growth in the current estimate of program acquisition unit cost (PAUC) or average procurement unit cost (APUC) of at least 15 percent over the currently approved APB objective, or at least 30 percent over the original APB objective, ASN(RD&A) shall inform USD(AT&L) and SECNAV. If SECNAV subsequently determines that there is a significant cost growth, SECNAV shall notify Congress in writing of a breach. The notification shall not be later than 45 days after the date of ASN(RD&A)'s reasonable cause report. Notification shall include the date that SECNAV determined a significant cost growth.

In addition, SECNAV shall submit a SAR for either the fiscal year quarter ending on or after the determination date, or for the fiscal-year quarter that immediately precedes the fiscal-year quarter ending on or after the determination date. This SAR shall contain the additional, breach-related information.

For critical cost growth in the current estimate of PAUC or APUC of at least 25 percent over the currently approved APB objective, or at least 50 percent over the original APB objective per 10 U.S.C. Section 2433, the PM shall provide USD(AT&L) via ASN(RD&A) an assessment of: (a) the projected cost of completing the program if current requirements are not modified, (b) the projected cost of completing the program based on reasonable modification of such requirements, and (c) the rough order of magnitude of the costs of any reasonable alternative system or capability. The PM shall also provide USD(AT&L), via ASN(RD&A), letters to the Congressional Defense Committees with the following written certification (with a supporting explanation) stating that: (a) such acquisition program is essential to the national security, (b) there are no alternative programs which will provide equal or greater military capability at less cost, (c) the new estimates of the PAUC or APUC are reasonable, and (d) the management structure for the acquisition program is adequate to manage and control the PAUC and the APUC. The certification shall be provided to the Congressional Defense Committees within 60 days after the quarterly or annual SAR is provided to ASN(RD&A). The certification should address the cause of the unit cost breach directly and completely, regardless of the cause.

If SECNAV makes a determination of significant cost growth in the current estimate of PAUC or APUC of at least 15 percent over the currently approved APB objective, and an SAR containing the additional unit-cost breach information is not submitted to Congress as required, funds appropriated for RDT&E, procurement, or military construction may not be obligated for a major contract under the program. If SECNAV makes a determination of critical cost growth in the current estimate of PAUC or APUC of at least 25 percent over the currently approved APB objective, and a certification by USD(AT&L) is not submitted to Congress as required, funds appropriated for RDT&E, procurement, or military construction may not be obligated for a major contract under the program. A critical cost growth in the current estimate of PAUC or APUC of at least 25 percent over the currently approved APB objective resulting from the termination or cancellation of an entire program will not require USD(AT&L) program certification.

*Not applicable to ACAT IA programs.

3.9.6 Past Performance Reporting/Reports

The use of past performance information in source selection is required by references (w) through (aa). The DON automated system for reporting this information is the Contractor Performance Assessment Reporting System (CPARS) which is accessible via the Internet at "http://www.cpars.csd.disa.mil/". PM's have the responsibility for providing an annual assessment of their contractors' performance in the CPARS.

The PMs shall report their contractor assessment information per the CPARS procedures of reference (ab) for those contracts that meet the following dollar thresholds:

1. Systems (new development and major modifications)	≥ $5 million
2. Ship Repair and Overhaul	≥ $0.5 million
3. Services	≥ $1 million
4. Information Technology (IT)	≥ $1 million
5. Operations Support	≥ $5 million

3.10 Program Certification and Assessments

3.10.1 Certification Requirements at Milestone A

As required by section 2366b of title 10, U.S.C., as amended by Public Law 110-181 of 28 Jan 08 Section 943 (FY 2008 National Defense Authorization Act), the MDA for an ACAT I program shall sign a certification memorandum for the record prior to Milestone A approval. The ADM shall include the statement: "I have made the certifications required by section 2366b of title 10, United States Code."

3.10.2 Certification Requirements at Milestone B

The business case analysis for ACAT I programs shall be prepared by officials designated by the MDA. The MDA, without authority to delegate, shall review the business case analysis and determine whether the program should be certified. The MDA's decision to certify shall be documented in a signed certification memorandum for the record per the guidance in USD(AT&L) memorandum of 25 February 2008 prior to Milestone B approval (10 U.S.C. Section 2366a, as amended by Public Law 110-181 of 28 Jan 08 Section 812 (FY 2008 National Defense Authorization Act)). If the program is initiated at a later decision point, i.e., Milestone C, a similar memorandum shall be prepared, as a matter of DoD policy. The certification memorandum shall be submitted to the congressional defense committees, as defined in 10 U.S.C. Section 101(a)(16), with the first SAR for the program after completion of the certification. The ADM shall include the statement: "I have reviewed the program and the business case analysis and have made the certifications required or executed a waiver of the applicability of one or more of the components of the certification requirement as authorized by subsection 2366a(d) of title 10, United States Code."

3.10.3 Assessments Required Prior to Approving the Start of Construction on First Ship of Shipbuilding Program

3.10.3.1 Production Readiness Review Report and Certification

Section 124 of the National Defense Authorization Act for Fiscal Year 2008, Pub. L. No. 110-181 requires that SECNAV shall, concurrent with approving the start of construction of the first ship for any major shipbuilding program:

1. submit a report to the congressional defense committees on the results of any production readiness review; and

2. certify to the congressional defense committees that the findings of any such review support commencement of construction.

3.10.3.2 Production Readiness Review Report Assessment

The report required by subsection 3.10.3.1, item 1., shall include, at a minimum, an assessment of each of the following:

1. The maturity of the ship's design, as measured by stability of the ship contract specifications and the degree of completion of detail design and production design drawings.

2. The maturity of developmental command and control systems, weapon and sensor systems, and hull, mechanical and electrical systems.

3. The readiness of the shipyard facilities and workforce to begin construction.

4. The Navy's estimated cost at completion and the adequacy of the budget to support the estimate.

5. The Navy's estimated delivery date and description of any variance to the contract delivery date.

6. The extent to which adequate processes and metrics are in place to measure and manage program risks.

3.10.3.3 Definitions

For the purposes of 3.10.3.1 and 3.10.3.2:

1. Start of construction. The term "start of construction" means the beginning of fabrication of the hull and superstructure of the ship.

2. First ship. The term "first ship" applies to a ship if:

a. the ship is the first ship to be constructed under that shipbuilding program; or

b. the shipyard at which the ship is to be constructed has not previously started construction on a ship under that shipbuilding program.

3. Major shipbuilding program. The term "major shipbuilding program" means a program for the construction of combatant and support vessels required for the naval vessel force, as reported within the annual naval vessel construction plan required by section 231 of title 10, U.S.C.

4. Production readiness review. The term "production readiness review" means a formal examination of a program prior to the start of construction to determine if the design is ready for production, production engineering problems have been resolved, and the producer has accomplished adequate planning for the production phase.

Chapter 4
Information Technology (IT) Considerations

References:
(a) DOD Instruction 5000.2, Operation of the Defense Acquisition System, of 12 May 03
(b) SECNAVINST 5000.36A
(c) DOD Directive 4630.05, Interoperability and Supportability of Information Technology (IT) and National Security Systems (NSS), of 5 May 04
(d) DOD Instruction 4630.8, Procedures for Interoperability and Supportability of Information Technology (IT) and National Security Systems (NSS), of 30 Jun 04
(e) Chairman of the Joint Chiefs of Staff Instruction (CJCSI) 3170.01F, Joint Capabilities Integration and Development System, of 1 May 07
(f) Chairman of the Joint Chiefs of Staff Manual (CJCSM) 3170.01C, Operation of the Joint Capabilities Integration and Development System, of 1 May 07
(g) CJCSI 6212.01D, Interoperability and Supportability of Information Technology and National Security Systems, of 8 Mar 06
(h) DOD Directive 8500.01E, Information Assurance, of 24 Oct 02
(i) DOD Instruction 8500.2, Information Assurance (IA) Implementation, of 6 Feb 03
(j) DOD Instruction 8580.1, Information Assurance (IA) in the Defense Acquisition System, of 9 Jul 04
(k) DOD Instruction 8510.01, DoD Information Assurance Certification and Accreditation Process (DIACAP), of 28 Nov 07
(l) SECNAVINST 5239.3A
(m) National Security Telecommunications and Information Systems Security Instruction (NSTISSI) No. 4009, National Information Systems Security Glossary, of Sep 00
(n) OMB Circular A-130, Management of Federal Information Resources, Transmittal Memorandum No. 4, of 28 Nov 00
(o) National Security Telecommunications and Information Systems Security Policy (NSTISSP) No. 11, National Policy Governing the Acquisition of Information Assurance (IA) and IA-enabled Information Technology Products, of Jun 03 (FOUO)

(p) CJCSI 6510.02B, Cryptographic Modernization Plan, of 27 Nov 02
(q) DOD Instruction 8520.2, Public Key Infrastructure (PKI) and Public Key Enabling, of 1 Apr 04
(r) Director of Central Intelligence Directive (DCID) 6/3, Protecting Sensitive Compartmented Information Within Information Systems, of 5 Jun 99
(s) SECNAVINST 3501.1A
(t) ASD(NII) Memorandum, Internet Protocol Version 6 (IPv6) Policy Update, of 16 Aug 05

4.1 Clinger-Cohen Act (CCA) (40 U.S.C., Subtitle III) Compliance

The CCA applies to all Information Technology (IT) systems, including National Security Systems (NSS). Acquisition Category (ACAT) IAM and IAC programs require a CCA compliance certification while all other ACAT programs containing Mission-Critical (MC) or Mission-Essential (ME) IT systems, including NSS, require CCA compliance confirmation. See reference (a), enclosure (4), for minimum requirements to demonstrate compliance with the CCA for ACAT programs containing MC or ME IT systems, including NSS. The Web site www.doncio.navy.mil provides additional guidance, the CCA compliance table, and a sample signature page confirming CCA compliance for ACAT ID, IC, II, III, and IV programs, Abbreviated Acquisition Programs (AAPs), and contracts that acquire MC or ME IT systems, including NSS; and a sample signature page for CCA certification for ACAT IAM and IAC programs.

4.1.1 CCA Compliance Package Development and Processing for ACAT IAM, IAC, ID, IC, and II Programs containing Mission-Critical (MC) or Mission-Essential (ME) IT Systems including National Security Systems (NSS)

The Program Manager (PM) shall prepare the CCA Compliance Package (the completed CCA table, signature page, and supporting documentation) in coordination with the Command Information Officer (IO). The Command IO for the Marine Corps is the Department of the Navy (DON) Deputy Chief Information Officer (CIO) (Marine Corps), the Director for Command, Control, Communications, and Computers (C4) at Headquarters Marine Corps (HQMC). The PM may use an Integrated Product Team (IPT) structure to aid in coordinated development. The PM shall forward the CCA Compliance Package to the Command IO for

concurring signature. The Command IO shall review and then forward the CCA Compliance Package to DON CIO and DASN (C4I and Space) concurrently, at least three months prior to each scheduled program decision point. (In those instances where a Command IO is not in the direct reporting chain (e.g., a Direct Reporting Program Manager (DRPM) or a PM who reports to a Program Executive Officer (PEO) as opposed to a Systems Command (SYSCOM)), the PM may elect to involve the Command IO in preparing the CCA Compliance Package and forwarding it or the PM may forward it directly up the chain of command to DON CIO and DASN (C4I and Space) concurrently, at least three months prior to each scheduled program decision point.)

DON CIO and DASN (C4I and Space) shall review the CCA Compliance Package. If the CCA Compliance Package contains the necessary information, it will be confirmed (for ACAT ID, IC, and II programs) or certified (for ACAT IAM and IAC programs) by DON CIO. In each case, a copy of the signed CCA Compliance Package will be forwarded to the PM and the MDA. For Major Defense Acquisition Programs (MDAPs) and Major Automated Information System (MAIS) programs a copy will also be forwarded to DoD CIO. Per reference (a), the MDA shall not approve program initiation, Milestone A, B, or Full-Rate Production decision (or their equivalent) for a MAIS until the DoD CIO certifies that the MAIS program is being developed per the CCA. The DoD CIO also has the responsibility to subsequently certify to the Congressional defense committees that a MAIS program is being developed per the CCA.

4.1.2 CCA Compliance Package Development and Processing for ACAT III, IV, and AAP Programs containing MC or ME IT Systems including NSS

The PM shall prepare the CCA Compliance Package (the completed CCA table, signature page, and supporting documentation), in coordination with the Command IO. The Command IO for the Marine Corps is the DON Deputy CIO (Marine Corps), the Director for C4 at HQMC. The PM may use an IPT structure to aid in coordinated development. The PM shall forward the CCA Compliance Package to the Command IO. (In those instances where a command IO is not in the direct reporting chain (e.g., a DRPM or a PM who reports to a PEO as opposed to a SYSCOM), the PM may elect to involve the Command IO in preparing the CCA Compliance Package and forwarding it or the PM may forward it directly up the chain of command to DON CIO and DASN (C4I and Space) concurrently, at least three months prior to each scheduled program decision point.)

The Command IO shall review the CCA Compliance Package. (DON CIO and DASN (C4I and Space) shall review those CCA Compliance Packages forwarded from a PEO PM or a DRPM.) Once the Package is determined to contain the necessary information, it will be confirmed by the Command IO (or DON CIO for those sent from a PEO PM or a DRPM) and a copy forwarded to the PM and the MDA. The DON CIO will generally rely upon the Command IO to confirm CCA compliance, but may conduct a more detailed review of the compliance documentation, on a case-by-case basis. The Command IO shall maintain records of all ACAT III, IV, and AAP programs for which they have approved CCA Confirmations.

4.2 Contracts for Acquisition of MC or ME IT Systems including NSS

No contract shall be awarded that acquires an MC or ME IT system, including an NSS, until:

1. The IT system is registered in the DON IT Registration Database (Contact your Command IO for assistance with IT Registration),

2. The Information Assurance Strategy is coordinated with the DoD CIO for ACAT ID, IAM, and IAC programs, and approved by the DON CIO for ACAT ID, IC, IAM, IAC, and II programs, or by the respective Command IO for ACAT III, IV, and AAPs, (A PEO PM or a DRPM may have their ACAT III, IV, and AAP Information Assurance Strategy approved by the DON CIO.), and

3. Compliance with the CCA is certified for ACAT IAM and IAC programs and confirmed for ACAT ID, IC, II, III, IV, and AAP programs.

4. When the use of commercial IT is considered viable, maximum leverage of and coordination with the DoD Enterprise Software Initiative (DoD ESI) and the Federal SmartBUY program shall be made. The DoD ESI is an initiative led by the DoD CIO to develop processes for DoD-wide software asset management. The DoD implements SmartBUY through the DoD ESI Team, which provides DoD commercial software requirements to SmartBUY and manages selected SmartBUY agreements. DoD ESI and SmartBUY have jointly established software agreements for commercial software and software maintenance that coordinate multiple IT investments to leverage the Federal Government's purchasing power for best-priced, standards-compliant products. DON activities purchasing software for which agreements have been awarded must follow DFARS 208.74 and consider use of DoD ESI agreements before buying elsewhere, and if there are existing SmartBUY agreements, they

must use the SmartBUY agreements. The Web site http://www.esi.mil/ provides additional guidance.

4.3 Information Integration and Interoperability

Information integration and interoperability enables effective net-centric warfighting and combat support operations, both within DON and with Joint activities, with our allied and coalition partners and non-DoD agencies. During the acquisition life cycle, all IT, including NSS, programs shall implement interoperability, supportability, and data management processes, procedures, and tools per reference (b) through (g).

4.4 Information Assurance (IA) Program Manager (PM) Responsibilities

PMs are responsible for ensuring that security requirements are addressed as part of the acquisition program. The PM shall develop, procure, and manage information systems, throughout the life-cycle of the program using appropriate DoD approved IA controls and processes. As part of this effort, the PM shall develop an information assurance strategy at Milestones A, B, and C, Full-Rate Production Decision Review (FRP DR), and prior to contract award for any MC or ME IT system, including a NSS. The PM shall obtain approval of the IA Strategy from the DON CIO for ACAT ID, IC, IAM, IAC, and II programs. The DON CIO staff will forward IA strategies for all ACAT ID, IAM, and IAC programs to the DoD CIO for review prior to approval by the DON CIO. The respective Command IO will approve IA strategies for ACAT III, IV, and AAP programs. (A PEO PM or a DRPM may send their IA strategies for ACAT III, IV, and AAP programs to DON CIO for approval.) The PM shall use the most current template in the DON CIO IA Strategy Guidance to develop the program IA Strategy. The template can be obtained at the Web site www.doncio.navy.mil, by clicking on the "Project Teams" tab, then clicking on "Information Assurance."

The PM shall comply with the IA policy of references (h) through (t) for all weapon and IT systems. Compliance with references (h) through (t) specifically includes:

1. Routinely conducting risk assessment, documenting system threats and vulnerabilities including the test and remediation plans, and ensuring all risk assessment activities and documentations are current;

2. Ensuring all systems have undergone the certification and accreditation (C&A) process (e.g., Defense Information

Technology Security Certification and Accreditation Process (DITSCAP) and DoD Information Assurance Certification and Accreditation Process (DIACAP));

3. Ensuring that IA costs are included in budget;

4. Ensuring that IA requirements are fully implemented throughout the early design and development stages of the acquisition life-cycle;

5. Ensuring all IA solutions support interoperability and integration. (The PM shall ensure that appropriate IA controls are in place for all systems that directly or indirectly (indirectly refers to situations in which a system's data/information is transmitted unchanged by pass-through system(s)) connect with the Global Information Grid (GIG));

6. Incorporating public key infrastructure (PKI) and Biometric solutions for all systems that require one or more of the following: integrity, confidentiality, authentication, non-repudiation;

7. Defining the Mission Assurance Category (MAC) of the system (which signifies the required level of integrity and availability);

8. Designating the security classification of the system (which signifies the required confidentiality level of the system);

9. Ensuring compliance with Common Criteria National Information Assurance Partnership (NIAP) framework, per National Security Telecommunications and Information Systems Security Policy (NSTISSP) Number 11, National Policy Governing the Acquisition of IA and IA-enabled IT Products for all IA and IA-enabled commercial off-the-shelf (COTS) and government off-the-shelf (GOTS); and

10. Incorporating effective IA controls and appropriate policies for ensuring the survivability of the system and the information that it processes, stores, and transmits.

See reference (a), enclosure 4, for implementation requirements for all DON ACAT programs.

4.5 Records Management

PMs shall ensure records management and archival functions are incorporated into the design, development, and implementation of information systems. National Archives and Records Administration (NARA) approved disposition instructions shall be incorporated into the system design of electronic information systems that produce, use, or store data files.

Chapter 5
Integrated Test and Evaluation

References:
(a) DOD Instruction 5000.2, Operation of the Defense Acquisition System, of 12 May 03
(b) SECNAVINST 5200.40
(c) Chairman of the Joint Chiefs of Staff Instruction (CJCSI) 6212.01D, Interoperability and Supportability of Information Technology and National Security Systems, of 8 Mar 06
(d) DOD Instruction 8500.2, Information Assurance Implementation, of 6 Feb 03
(e) DOD Instruction 8510.01, DoD Information Assurance Certification and Accreditation Process (DIACAP), of 28 Nov 07
(f) SECNAVINST 5239.3A
(g) DOD Directive 4650.1, Policy for Management and Use of the Electromagnetic Spectrum, of 8 Jun 04
(h) 32 CFR 775, Procedures For Implementing The National Environmental Policy Act
(i) 32 CFR 187, Environmental Effects Abroad of Major Department of Defense Actions
(j) Assistant Secretary of the Navy (Installations and Environment) Memorandum 99-01, Requirements for Environmental Considerations in Test Site Selection, of 11 May 99
(k) DOD Instruction 4630.8, Procedures for Interoperability and Supportability of Information Technology (IT) and National Security Systems (NSS), of 30 Jun 04
(l) SECNAVINST 5000.36A
(m) SECNAVINST 5100.10J
(n) OPNAVINST 5100.8G
(o) OPNAVINST 5090.1C
(p) OPNAVINST 5100.19E
(q) OPNAVINST 5100.23G
(r) OPNAVINST 5100.24B
(s) DOD Directive 5230.24, Distribution Statements on Technical Documents, of 18 Mar 87
(t) DOD Instruction 3200.14, Principles and Operational Parameters of the DoD Scientific and Technical Information Program, of 13 May 97 with Ch 3 of 28 Jun 01

5.1 Test and Evaluation (T&E) Overview

T&E is conducted continuously throughout the acquisition life cycle of a system:

1. For statutory and regulatory reasons, and

2. To gain knowledge that can be used to:

   a. Advance system development,

   b. Make programmatic acquisition decisions, and

   c. Inform users about the system's operational characteristics and performance.

This enclosure delineates the mandatory T&E roles, responsibilities, procedures, and requirements for Department of Navy acquisition programs. While T&E is divided into contractor, developmental, operational, and live fire testing, it shall be integrated and coordinated with the users, the system developers, and the testers to the fullest extent allowed by statute and regulation. The integration and coordination of T&E shall start early, preferably during concept refinement. Where mandatory T&E procedures and requirements are not provided for herein or need clarification, guidance shall be requested for Navy programs from the Chief of Naval Operations (CNO), Director of Test & Evaluation and Technology Requirements (N091), or for Marine Corps programs from the Director, Marine Corps Test and Evaluation Activity (MCOTEA).

5.2 DON Responsibilities for T&E

To effect an efficient forum for collaboration, personnel who participate in test and evaluation processes for the DON must have fundamental knowledge of the DoD practice of Integrated Product Teams (IPTs) and the responsibilities of organizations contained in this instruction. The responsibilities contained herein are not meant to be restrictive in nature, but to provide a common base for all T&E participants to communicate organization, plans, and execution. In addition to understanding the intent of T&E guidance provided in this instruction, DON personnel should utilize web-enabled knowledge forums to amplify their knowledge of standard and best practices, lessons learned, and to ensure compliance with legal statutes and regulations.

5.2.1 Principal Navy T&E Points of Contact and Responsibilities

5.2.1.1 Chief of Naval Operations (CNO) (N091)

CNO (N091) is responsible to the CNO for establishing Navy T&E policy, determining the adequacy of T&E infrastructure required to support systems testing, coordinating Navy participation in joint testing matters, reviewing capabilities documents (e.g., Initial Capabilities Document (ICD), Capability Development Document/Capability Production Document (CDD/CPD)) for testability, and resolving developmental and operational test issues. CNO (N091) shall act as the final authority and signatory for Test and Evaluation Master Plans (TEMPs) prior to Component Acquisition Executive (CAE) approval and signature. CNO (N091) shall be responsible for overseeing testing matters associated with Marine Corps aircraft, aviation equipment, and Air Traffic Control And Landing (ATCAL) equipment.

5.2.1.2 Program Manager (PM)

The PM shall, in concert with the developer, user, and testing communities, coordinate developmental test and evaluation (DT&E), Operational Test and Evaluation (OT&E), and Live-Fire Test and Evaluation (LFT&E) into an efficient continuum, closely integrated with system design, development, production, and sustainment, that achieves the approved capability. The necessary time and resources shall be planned and budgeted to ensure adequate testing is conducted to support decision makers and the users throughout the life cycle of the acquisition.

5.2.1.3 Commander, Operational Test and Evaluation Force (COMOPTEVFOR)

COMOPTEVFOR is the designated Operational Test Agency (OTA) for the United States Navy and for Marine Corps aviation programs assigned to CNO sponsorship. COMOPTEVFOR shall: plan, conduct, evaluate, and report the OT&E of Acquisition Category (ACAT) I, IA, II, III, IVT, and Rapid Deployment Capability (RDC) programs; monitor ACAT IVM programs; evaluate initial tactics for systems that undergo OT&E; and make fleet release or introduction recommendations to CNO for all ACAT programs and those system configuration changes selected for OT&E. COMOPTEVFOR prepares the OT&E content (normally Part IV) and a section listing operational test resources needed to execute test (normally incorporated in Part V) with the exception of live-fire test and evaluation (LFT&E) for the Test and Evaluation Master Plan

(TEMP). COMOPTEVFOR shall coordinate for multi-service and joint OT&E, and is the lead OTA when the Navy is assigned lead. COMOPTEVFOR is the designated RDT&E fleet-support scheduling agent for CNO (N091).

5.2.1.4 Naval Systems Commands (SYSCOMs)

SYSCOMs shall manage assigned facilities and personnel to ensure efficient and effective integration of DT&E and LFT&E of systems within the SYSCOM's domain. When requested and funded, SYSCOMs will support programs with the resources needed to coordinate planning, scheduling, and executing T&E throughout the continuum of system development.

5.2.1.4.1 Naval Air Systems Command (NAVAIRSYSCOM)

NAVAIRSYSCOM, in support of PMs, shall conduct and report on DT&E and LFT&E for Navy and CNO sponsored Marine Corps aircraft, aviation systems, and ATCAL equipment.

5.2.1.4.1.1 Naval Air Systems Command Technical Assurance Board (NTAB)

The NTAB shall monitor emerging aircraft and aircraft-related programs under development. All aircraft ACAT I Naval Aviation programs and other select programs when requested by the Developing Activity (DA), the resource sponsor, or CNO (N091) shall be monitored until completion of Initial Operational Test and Evaluation (IOT&E). Monitoring shall continue until all major deficiencies are resolved or the program is removed from the Major Defense Acquisition Program (MDAP) list.

5.2.1.4.2 Weapons System Explosive Safety Review Board (WSESRB)

The WSESRB is the Navy's independent agent for assessing energetic systems, weapons, and those systems that manage and control weapons for safety compliance. WSESRB review findings provide the fundamental explosives safety input for the conduct of final developmental and operational testing and for major acquisition decisions.

5.2.1.5 Office of Naval Intelligence (ONI)

ONI is the designated naval activity responsible for threat intelligence and validating threat tactics supporting T&E

of Navy acquisition programs. For ACAT ID programs, ONI threat assessments will be validated by the Defense Intelligence Agency (DIA) per reference (a).

5.2.2 Principal Marine Corps Points of Contact and Responsibilities

5.2.2.1 Deputy Commandant for Manpower and Reserve Affairs (DC,M&RA)

DC,M&RA assigns personnel per established manpower requirements for Marine Corps participation in JT&E and in support of OT&E for ACAT I and designated ACAT II programs within manpower guidelines established by the Deputy Commandant, Combat Development and Integration (DC,CD&I) and after consultation with Commanding General, Marine Corps Systems Command (CG, MARCORSYSCOM) and the Director, Marine Corps Operational Test and Evaluation Activity (MCOTEA).

DC,M&RA is designated the functional manager for Marine Corps Manpower Systems' Automated Information Systems (AISs). DC,M&RA is responsible for developing the concept of employment (COE) and Mission-Essential (ME) functions for Manpower AISs and interoperability and standards requirements for Capability Development/Production Documents (CDDs/CPDs). DC,M&RA will provide representatives to coordinate with CG, MARCORSYSCOM, the Marine Corps Direct Reporting Program Managers (DRPMs), and Director, MCOTEA, to assist in determining AIS program failure definition (FD)/scoring criteria (SC) for each manpower system’s AIS program under development and provide a voting member for scoring conferences.

5.2.2.2 Deputy Commandant for Installations and Logistics (DC,I&L)

DC,I&L is designated the functional manager for Marine Corps Logistics Systems' AISs.

5.2.2.3 Director, Marine Corps Intelligence Activity (MCIA)

Director, MCIA shall provide CG, MARCORSYSCOM, Marine Corps DRPMs, and Director, MCOTEA, with a threat test support package (TTSP) based on the latest system threat assessment (STA). The TTSP should include all threat data required to support DT, OT and LFT&E.

5.2.2.4 Deputy Commandant for Combat Development and Integration (DC,CD&I)

DC,CD&I shall develop the COE, Operational Mode Summary/Mission Profiles (OMS/MP), and ME functions for proposed non-AISs and interoperability and standards requirements for CDDs/CPDs. In coordination with CG, MARCORSYSCOM, the Marine Corps DRPMs, and Director, MCOTEA, provide a representative to assist in determining non-AIS program Failure Definition and Scoring Criteria (FD/SC) for each program under development and provide a voting member for scoring conferences.

DC,CD&I provides oversight of joint test and evaluation (JT&E) for the Commandant of the Marine Corps (CMC) and Headquarters Marine Corps (HQMC) Staff to ensure T&E activities directly support the CMC's responsibilities for sustained material readiness and mission capability of the Fleet Marine Force (FMF). DC,CD&I will be the primary interface with Joint Interoperability Test Command (JITC) for all joint test and evaluation issues.

5.2.2.5 Commanding General, Marine Corps Systems Command (CG, MARCORSYSCOM)

CG, MARCORSYSCOM shall budget for DT&E and OT&E and act as the focal point for interface with the Board of Operating Directors for T&E (BoOD(T&E)). CG, MARCORSYSCOM provides oversight of programming activities related to T&E for the CMC and HQMC Staff to ensure T&E activities directly support the CMC's responsibilities for sustained material readiness and mission capability of the Fleet Marine Force (FMF). The CG, MARCORSYSCOM PM shall provide a test support package (TSP) to the Director, MCOTEA, one year before scheduled OT start. The TSP should include, at a minimum, early T&E, a CDD/CPD, a STA, a threat scenario, a DC,CD&I-approved COE, program documentation addressing support and life-cycle management of hardware and computer resources, and an organizational structure to include a table of organization and table of equipment. Upon request, the PM should provide software documentation. The threat scenario must include a signed concurrence from MCIA. CG, MARCORSYSCOM serves as the Marine Corps point of contact with Office of Secretary of Defense (OSD) on matters relating to LFT&E. CG, MARCORSYSCOM shall consolidate and process quarterly requests for use of naval fleet assets in support of Research, Development, Test, and Evaluation (RDT&E) requirements. CG, MARCORSYSCOM

shall represent the Marine Corps in all DT&E matters. CG, MARCORSYSCOM shall be the primary interface with JITC on joint interoperability testing conducted during DT. The CG, MARCORSYSCOM shall exercise review and approval authority over TEMPs for assigned programs and multi-service programs. The CG, MARCORSYSCOM PM shall establish and chair a Test and Evaluation Working Integrated Product Team (T&E WIPT) for all assigned programs. CG, MARCORSYSCOM shall certify that systems are safe and ready for DT&E and OT&E. CG, MARCORSYSCOM shall manage the Marine Corps External Airlift Transportation (EAT) Certification Program and the Marine Corps Foreign Comparative Testing Program.

5.2.2.6 Director, Marine Corps Operational Test and Evaluation Activity (MCOTEA)

MCOTEA is the designated OTA for the United States Marine Corps. Director, MCOTEA shall ensure that the OT for all ACAT programs is effectively planned, conducted, evaluated, and reported; and shall coordinate the scheduling of resources for OT requiring FMF support through the Two Year Master Test Plan (TYMTP) published annually with quarterly updates. Director, MCOTEA, shall host and chair a T&E WIPT for determining FD/SC for each program. Director, MCOTEA, shall prepare Part IV of the TEMP, with the exception of LFT&E. Director, MCOTEA, shall request, from CMC, the assignment of a Test Director (TD) for ACAT I and certain ACAT II programs. Director, MCOTEA, shall task the FMF and other commands in matters related to OT&E by publishing a Test Planning Document (TPD). When significant test limitations are identified, the Director, MCOTEA, shall advise the MDA of risk associated in the procurement decision. Director, MCOTEA, shall manage those OSD-directed multi-Service OT&Es for which the Marine Corps is tasked. Director, MCOTEA, shall chair and conduct an operational test readiness review (OTRR) for determining a program's readiness to proceed with OT&E. See this instruction, enclosure (5), paragraph 5.6, for further guidance. Director, MCOTEA, shall prepare and provide directly to the CMC, within 90 days after completion of OT&E, an independent evaluation report for all OT&E. Director, MCOTEA, shall coordinate Marine Corps support for other military Services' OT&Es. Director, MCOTEA, shall advise the Assistant Commandant of the Marine Corps (ACMC) on OT&E matters. Director, MCOTEA, shall chair an annual OT&E planning conference. The conference should have representation from the FMF, appropriate HQMC staff offices, DC,CD&I, CG, MARCORSYSCOM, and others, as appropriate. Director, MCOTEA, shall maintain direct liaison with OSD’s Director of Operational Test and Evaluation (DOT&E), the FMF for OT&E matters, and other military activities and

commands, as required. Director, MCOTEA shall represent the Marine Corps in all Multi-Service OT&E matters. Director, MCOTEA shall be the primary interface with JITC on joint interoperability testing conducted during OT. For USMC programs not required by statute to conduct LFT&E, but where LFT&E is appropriate, the Director, MCOTEA shall concur with the LFT&E strategy as approved by the MDA in the Test and Evaluation Strategy (TES) or TEMP.

5.2.2.7 Marine Forces

The Commanding Generals, Marine Forces Pacific (MARFORPAC) and Marine Forces Command (MARFORCOM) shall designate a test coordinator as a focal point for all T&E matters and support MCOTEA in the T&E of new concepts, equipment, and systems. The Marine Forces shall provide a TD who will write the OT report and submit it to MCOTEA via the CG of the appropriate Marine Forces within 30 days of completion of OT&E for an ACAT II, III, or IV program. The Marine Forces shall provide personnel and equipment to participate in JT&E programs, as required.

5.2.3 Acquisition Items Exempt from T&E Provisions within this Instruction

5.2.3.1 Items Exempt

The following items are tested by other organizations and are exempt from the T&E provisions of this instruction:

1. Cryptographic or Cryptology equipment

2. Naval Nuclear Reactors and associated Systems

3. Nuclear Weapons

4. Medical and Dental Systems

5. Spacecraft and Space-based systems

5.2.3.2 T&E Considerations that Apply to Exempt Items

The exemption herein does not apply to the following aspects of these items:

1. Information Technology (IT) administrative systems

2. Ships or Aircraft that carry these systems

3. Other systems that these exempt items support

4. Testing conducted at the request of or in cooperation with above parent organizations.

When the performance of these exempted items affects the effectiveness, suitability, survivability, or lethality of a system not exempt (e.g., communications system with embedded cryptology subsystem, ship with nuclear propulsion), then the exempted item's performance may be considered in the T&E of the supported system. Such performance assessments must be coordinated with and approved by the organization with direct responsibility for the exempted item (e.g., National Security Agency (NSA) for cryptology systems or naval reactors for naval nuclear propulsion systems).

5.3 T&E Strategy

5.3.1 Preparation and Milestones

See reference (a), enclosure 5, for guidance in preparing a T&E strategy (TES) that is required at Milestone A. The TES documents a strategy of realistic test concepts that support development decisions throughout the acquisition life-cycle. The TES must include adequate detail to construct pre-Milestone B assessments and tests. The TES is the precursor to the TEMP that is required for Milestone B and beyond. While specific program alternatives are generally unknown before Milestone B, the TES needs to address: the maturity level of the technology; anticipated DT&E, OT&E, and LFT&E concepts; and early predictions of test support requirements that may need development or procurement. When Modeling and Simulation (M&S) is part of the TES, the M&S proponent shall provide the strategy to comply with verification, validation and accreditation per reference (b). For OT&E events prior to Milestone B, the TES shall identify objectives, scope, and funding, as well as overall evaluation strategy. Programs shall conform to DOT&E policies and guidelines when preparing TES documentation, unless granted relief by the TEMP approval authority.

5.3.2 Strategy Approval

The T&E strategies for programs on the OSD T&E Oversight List require the approval of DOT&E and the Under Secretary of

Defense for Acquisition, Technology, and Logistics (USD(AT&L)). Programs on the OSD T&E Oversight List will prepare a T&E strategy and coordinate with CNO (N091) or Director, MCOTEA for submission via the same approval process for a TEMP.

5.4 T&E Planning

5.4.1 Early Planning for Integrated T&E

Early involvement by test agencies is required to ensure successful execution of integrated testing. The DA, test agencies, and user representative (resource sponsor) must share a common interpretation of the system capability needs so that DT and OT are tailored to optimize resources, test scope, and schedule. Early, active, and continuous participation by test agencies during the development of capabilities documents will support effective communication and common interpretation.

5.4.2 Testing Increments in Evolutionary Acquisition

Developing Agencies shall ensure adequate DT&E, OT&E, and LFT&E are planned, funded, and executed for each new increment capability, as required. The PM shall ensure an independent phase of OT&E is completed prior to release of each increment to the user. Potentially short cycle times between milestone decisions necessitate early collaboration between the OTA, JITC, test resource providers (labs, ranges, instrumentation sources, etc.), sponsors, requirements officers, and oversight agencies in test planning for efficiency and testability that effectively evaluates system capabilities and performance. In addition to integrating test events to the fullest extent within statute and regulation, planners shall consider parallel development and review of the TEMP and relevant capabilities documents (e.g., CDD/CPD).

5.4.2.1 Innovative Testing

Short incremental development or spiral development cycle times and simultaneous testing of multiple increments may require innovative methods not discussed in this or other acquisition documents. Innovative or irregular methods will be described within the appropriate sections of the TEMP. TEMP concurrence and approval will formalize the agreement to implement those methods for use in the program.

5.4.2.2 Initial Operational Test and Evaluation (IOT&E)

The PM shall ensure IOT&E is completed prior to proceeding beyond Low Rate Initial Production (LRIP) for ACAT I and II programs as required by Title 10 U.S.C., Section 2399 and for all other programs on the OSD T&E Oversight List as required by reference (a). The PM shall ensure OT&E is conducted for each evolutionary acquisition increment for programs requiring OT&E. DOT&E, for programs on the OSD T&E Oversight List, and the OTA, for programs not on the OSD T&E Oversight List, shall determine the number of production or production-representative test articles required for IOT&E. To efficiently resource OT&E requirements, the OTA shall plan to leverage all operationally relevant T&E data and provide the PM with an early projection as to OT&E scope and resource requirements. See reference (a), enclosure 5, for implementation requirements for DON ACAT programs.

5.4.2.3 Software Intensive Systems

The OTAs are encouraged to use DOT&E and CNO (N091) best practice guidance for testing software intensive system increments (Command, Control, Communications, Computers, Intelligence, Surveillance, and Reconnaissance (C4ISR) and Major Automated Information System (MAIS) systems) in evolutionary acquisition. Although this decision process is discretionary, it effectively defines the scope and level of testing based on potential risk to mission areas, overall system complexity, and the complexity of changes in functionality within each increment. Innovative approaches are encouraged, but require coordination with oversight agencies to ensure adequacy of testing.

5.4.3 Test and Evaluation Working Integrated Product Team (T&E WIPT)

Formerly referred to as a Test Planning Working Group (TPWG), the T&E WIPT is a DoD wide accepted forum for representatives from across program disciplines and oversight agencies to discuss, coordinate, and resolve test planning goals and issues. Within DON the T&E WIPT is the accepted forum for the PM to develop the TES and TEMP. The PM or designated representative (normally a military O-6/O-5 or civilian equivalent) is responsible for initiating and chairing the T&E WIPT.

5.4.4 Navy Test and Evaluation Coordination Group (TECG)

When T&E issues arise that cannot be resolved by the T&E WIPT, a TECG should be convened. A TECG may also be used to

implement urgent required changes to the TEMP. When used for urgent TEMP changes, either a page change or a formal report of the TECG resolution shall be attached to the TEMP as an annex until the next update or revision. When an activity determines a more formal solution is required to resolve an issue, the activity -- via formal correspondence -- will request that CNO (N091), as the responsible authority for T&E issue resolution, convene a TECG. For programs on the OSD T&E Oversight List, the TECG chair, (CNO (N091)) shall coordinate results with DOT&E and USD(AT&L).

5.4.5 T&E Funding Responsibility

5.4.5.1 Developing Activity Responsibilities

Except as noted below, the DA shall plan, program, budget, and fund all resources identified in the approved TEMP, to include early OT involvement costs. Funds for OT&E shall be transferred to the OTA for distribution as required. All T&E operating costs for OT squadrons (VX-1, VX-9, HMX-1) will be provided on a reimbursable basis by the DA to COMOPTEVFOR headquarters. The DA should not be required to fund:

1. Fleet operating costs for RDT&E support,

2. Fleet travel for training,

3. Non-program-related OTA travel and administrative costs,

4. Non-program-related INSURV travel and administrative costs, and

5. Major Range and Test Facility Base (MRTFB) institutional costs.

5.4.5.2 Fleet Commanders Responsibilities

Fleet Commanders should plan, program, budget, and fund fleet travel for training, operating costs for RDT&E support provided by fleet units, and all costs associated with routine operational expenses except procurement costs of the systems tested and COMOPTEVFOR costs.

5.4.5.3 Board of Inspection and Survey (INSURV) Responsibilities

INSURV should plan, program, budget, and fund travel costs and costs not related to programs under test.

5.4.5.4 Non-Acquisition Programs Responsibilities

The Research and Development (R&D) agency for a non-ACAT or pre-ACAT program has responsibilities equivalent to those of the DA for T&E costs.

5.4.6 Research, Development, Test and Evaluation (RDT&E) Support Provided by FLEET Commanders

A developing agency, PM, COMOPTEVFOR, INSURV, or R&D agency shall request support from Fleet Commanders for the accomplishment of T&E that is documented in a TEMP or other approved test document via CNO (N091/N912). A request should normally be initiated nine (9) months prior to test event.

5.4.7 Test and Evaluation Master Plan (TEMP)

All DON ACAT programs shall implement a TEMP for all developmental, operational, and live-fire testing in compliance with reference (a), enclosure 5. The TEMP may be a stand-alone document, or it may be included as the T&E management section of a Single Acquisition Management Plan (SAMP). If the TEMP is included in the SAMP, that T&E section must undergo the normal TEMP review and approval process. Although the TEMP format is discretionary, deviations from the standard DOT&E policy require concurrence from the TEMP approval authority. The TEMP for all ACAT programs shall specify entry criteria and resources required for each phase of testing. The TEMP shall identify anticipated use of M&S and the M&S proponent's verification, validation and accreditation (VV&A) strategy per reference (b). The TEMP documents the commitment between signatories to test events, schedules, and resources.

To meet Milestones B and C and Full-Rate Production Decision Reviews (FRP DRs), the PM for MDAPs, MAIS programs, and programs on the OSD T&E Oversight List shall submit the TEMP via concurrence of primary DON stake-holders, CNO (N091), and ASN(RD&A) to the USD(AT&L) and the DOT&E sufficiently early to satisfy review timelines designated by those agencies. TEMPS for ACAT II programs shall be approved by ASN(RD&A). The MDA for all other ACAT TEMPs shall have final approval authority. CNO (N091) is the OPNAV single point of contact for TEMP coordination with OSD. The DA is responsible for distribution of an approved TEMP to all agencies involved in testing, providing support or

resources, oversight, or that have a relevant and official need to access testing information.

5.4.7.1 Milestone B TEMP Approval for IT Systems, including NSS, and Spectrum Dependent Systems

National Security Systems (NSS), IT systems, and systems with Service and joint interoperability requirements, and/or systems that require use of the electromagnetic spectrum must comply with DoD and JCS Integrated Architecture Guidance. The following integrated architecture-related items must be specifically addressed in Milestone B TEMP:

1. Appropriate Net-Ready (NR) Key Performance Parameter (KPP) products for IT, including NSS, programs per reference (c),

2. Information Assurance Mission Assurance Category (MAC) and Confidentiality Level per reference (d),

3. Security Certification and Accreditation Phase 1 System Security Authorization Agreement (SSAA) or equivalent per references (e) and (f), and

4. Spectrum Certification Documentation: Stage 3 DD-1494 or Note to Holders per references (a) and (g). As an alternative, the MDA may grant authorization to proceed into System Development and Demonstration (SDD) phase if, per reference (g), justification and a plan to achieve spectrum supportability has been provided to USD(AT&L), Assistant Secretary of Defense (Networks and Information Integration) (ASD(NII))/DoD Chief Information Officer (CIO), DOT&E, and the Chair, Military Communications-Electronics Board (MCEB).

5.4.7.2 Milestone C TEMP Approval for IT Systems, including NSS, and Spectrum Dependent Systems

As systems mature during the development process, more detailed information becomes available. The following integrated architecture-related items must be specifically addressed in Milestone C and beyond test phases:

1. Information Assurance MAC, and Confidentiality Level, and related IA controls per reference (d),

2. Security Certification and Accreditation Phase 2 SSAA or equivalent per references (e) and (f),

3. Security Certification and Accreditation Interim Authority to Test (IATT)/Interim Authority to Operate (IATO) per references (e) and (f),

4. Appropriate NR KPP products for IT, including NSS, programs per reference (c),

5. JITC assessment of interoperability readiness for an OT phase or the Interoperability Certification and Evaluation Plan (ICEP) is in place per reference (c),

6. E3 Verification/Validation reports/documentation per reference (g), and

7. Spectrum Certification Documentation: Stage 4 DD-1494 or Note to Holders per references (a) and (g). As an alternative, either USD(AT&L) may grant authorization to proceed into Production and Deployment phase or ASD(NII) may grant a waiver if, per reference (g), justification and a plan to achieve spectrum supportability has been provided to USD(AT&L), ASD(NII)/DoD CIO, DOT&E, and the Chair, MCEB.

5.4.7.3 Capabilities, Key System Attributes (KSAs), and Key Performance Parameters (KPPs) Traceability to Critical Operational Issues (COIs)

For DON programs, traceability will be consistent among the analysis of alternatives, ICD/CDD/CPDs, acquisition program baseline (APB), and the TEMP. The TEMP shall document how specific capabilities, KSAs, and KPPs trace to COIs and how each will be addressed in T&E.

As described in enclosure (2), section 2.1.2.3 of this instruction, KSAs are system or sub-system capabilities with priority to Navy leadership for cost, schedule or performance insight, but do not meet criteria as KPPs. KPPs are those capabilities that leadership considers of such significance that if not demonstrated are reason for program reassessment or possible termination.

5.4.7.4 Performance Thresholds and Critical Technical Parameters (CTPs)

Testable and measurable performance thresholds for DT, LFT&E, and OT shall be established. The CTPs derived from capabilities documents shall be established and incorporated in the TEMP by the PM. The operational parameters and critical

issues derived from the ICD/CDD/CPD to be used for OT shall be established and incorporated in the TEMP by the COMOPTEVFOR/Director, MCOTEA. The numerical values for DT and OT shall be the same as, the performance parameters established in the CDD/CPD. See reference (a), enclosure 5, for implementation requirements for all DON ACAT programs.

5.4.7.5 Test Planning for Commercial and Non-Developmental Items

Use of commercial products built to non-DoD specifications dictates the need for the PM and the T&E community to be cognizant of the commercial T&E data, standards, and methods used to provide assurance for these products. In some cases, commercial T&E data or use of commercial T&E practices by the DoD T&E community may provide adequate, reliable, and verifiable information to meet specific DT&E, OT&E, or LFT&E goals. When it can be shown that commercially available T&E data or use of commercial T&E practices meet specific DoD T&E needs and cost less than their DoD T&E counterpart, they should be considered by the PM or the OTA, and may be used to support T&E requirements.

5.4.7.6 Use of Existing T&E Infrastructure

Planners shall use existing investment in DoD ranges, facilities, and other DoD resources, to include embedded instrumentation for conduct of T&E unless it is demonstrated that the required capability does not exist within DoD or it is more cost effective to use a non-DoD resource. Projected T&E investment needs will be annotated in the TEMP (normally Part V). Infrastructure shortfalls that adversely impact the conduct of a specific T&E requirement will be identified in Limitations to Test in the TEMP.

5.4.7.7 Environmental Protection

Prior to any live fire, developmental or operational test decision that may affect the physical environment, the PM, per references (h) and (i), shall satisfy all applicable National Environmental Policy Act (NEPA)/Executive Order (EO) 12114 requirements. Testing shall be planned to ensure sufficient time to comply with applicable environmental requirements including the NEPA and EO 12114. Environmental impact considerations that directly affect testing shall be addressed in the TEMP and respective test plan as limitations or conditions of the testing. Test activities that may require NEPA/EO 12114 analyses shall be

identified in the NEPA/EO 12114 Compliance Schedule, which is required as part of the Program's Programmatic Environment, Safety and Occupational Health Evaluation (PESHE) and Acquisition Strategy. See reference (a), enclosure 7, paragraph E7.7, and reference (j) for implementation requirements for all DON ACAT programs.

5.4.7.8 Operational Test and Evaluation (OT&E) for Non-Acquisition Programs

OTA services may be required to evaluate capabilities of non-acquisition programs or pre-systems acquisition equipment or programs. At a minimum, the requesting agency must provide a statement describing mission functions with thresholds for any capabilities of interest. A test plan must be approved by the OTA prior to any OT.

5.4.7.9 Modeling and Simulation (M&S)

Per reference (a), enclosure 5, M&S may be used during T&E of an ACAT program to represent conceptual systems that do not exist and existing systems that cannot be subjected to actual environments because of safety requirements or the limitations of resources and facilities. M&S applications include hardware/software/operator-in-the-loop simulators, land-based test facilities, threat system simulators, C4I systems integration environments/facilities, and other simulations as needed. M&S shall not replace the need for OT&E and will not be the primary evaluation methodology. M&S shall not be the only method of meeting independent OT&E for beyond LRIP decisions per 10 U.S.C. Section 2399. M&S is a valid T&E tool that per reference (b) requires VV&A to supplement or augment test data. The PM is responsible for verification and validation (V&V) of M&S and the accreditation of M&S used for DT&E. The OTA is responsible for accreditation of M&S used for OT&E. The PM is required to complete V&V prior to an accreditation decision by the OTA. M&S previously accredited for other programs or test phases still requires accreditation for specific use by the OTA for each OT&E. Use of M&S shall be identified in the TEMP for each DT&E and OT&E phase it is intended to support (normally Parts III and IV respectively). M&S required resources shall be listed in the TEMP (normally Part V).

The PM shall identify and fund required M&S resources early in the acquisition life-cycle. The T&E WIPT shall develop and document a robust, comprehensive, and detailed evaluation strategy for the TEMP, using both simulation and test resources,

as appropriate. See reference (a), enclosure 5, for implementation requirements for all DON ACAT programs.

5.4.7.10 Interoperability Testing and Certification

The OTA has a responsibility to evaluate progress towards joint interoperability as part of each testing phase. Interoperability testing consists of inter-Service Navy-Marine Corps, joint Service, and where applicable, allied and coalition testing. Interoperability requirements are covered in detail by references (c), (k), and (l). Systems designated for FORCEnet compliance must achieve joint interoperability test certification. Testing for FORCEnet compliance will be in conjunction with DT and OT to the maximum extent possible. Lab environments used to conduct live, constructive, and virtual interface and interoperability testing must be verified, validated, and accredited by the PM and OTA per reference (b). See reference (a) for implementation requirements for DON ACAT programs. The following general procedures apply to IT systems, including NSS:

1. Interoperability capabilities (requirements) will be documented in the ICD, CDD, and CPD. The PM is responsible for developing the Information Support Plan (ISP) for IT, including NSS, programs based upon documented requirements.

2. Marine Corps-unique interfaces shall be tested during DT&E by MARCORSYSCOM, typically at Marine Corps Tactical Systems Support Activity (MCTSSA).

3. Navy-unique interfaces shall be tested during DT&E by DAs (e.g., PEO-C4I and PEO-EIS).

4. DON PMs will coordinate with JITC to develop and execute interoperability testing for certification of IT, including NSS, programs per reference (c). When appropriate, for complex IT systems, including NSS, the PM shall obtain an Interoperability Certification Evaluation Plan (ICEP) from JITC.

5. Navy systems processing data links (e.g., Link 4/11/16/22) and character oriented messages for human readable text (e.g., USMTF and OTH-Gold) must be tested for joint interoperability by Naval Center for Tactical Systems Interoperability (NCTSI) and by JITC for Joint certification.

6. Marine Corps systems processing data links (e.g., Link 4/11/16/22) and character oriented message human readable text (e.g., USMTF and OTH-Gold) must be initially tested for joint interoperability by MCTSSA, then by JITC for Joint certification.

7. Standard conformance testing with interoperability certification of specific data link interfaces should be accomplished prior to IOT&E. Per reference (c), a Joint Interoperability Test Certification or an Interim Certification to Operate (ICTO) shall be accomplished prior to FRP DR.

8. Per references (a), (c), and (k) and SECNAVINST 5000.2D, Table E3T2, all IT, including NSS, ACAT programs are required to receive Joint Staff (J-6) interoperability and C4I supportability certifications at FRP DR. This certification shall be used as the basis for certification of compliance with the applicable FORCEnet technical standards.

5.4.7.11 Information Assurance (IA) and Information Systems Security Certification and Accreditation

IA is critical to Net-centric Warfare. The MAC and Confidentiality Level, as approved by the Deputy CIO for the Navy or Marine Corps, establish IA control measures that must be incorporated into a system. Control measures are implemented, verified and validated via Security Certification and Accreditation (SCA). Reference (d) also requires V&V of control measures through vulnerability assessments and penetration testing. The Defense Information Technology Security Certification and Accreditation Process (DITSCAP) is the most common methodology used to V&V information assurance control measures. The PM coordinates with the OTA and the Designated Approving Authority (DAA) (CNO/CMC, or designee) to determine the extent of information systems security certification testing required. The PM documents SCA and IA controls in the TEMP, and the OTA reports on these controls as part of OT. An IATT or IATO must be obtained prior to OT. The OTA will evaluate IA controls and ability to detect, respond, and restore systems during OT based upon MAC and Confidentiality Level. The OTA does not certify the system for security or IA, but evaluates the effectiveness, suitability, and survivability of the system in its intended environment.

5.4.7.12 Anti-Tamper Verification and Validation Testing

Anti-Tamper (AT) Verification and Validation (V&V) is a requirement for all systems implementing an AT plan to ensure the AT techniques stated in the AT plan are fully implemented and respond appropriately in the event of tampering. This V&V must be accomplished by an independent team and be funded by the parent acquisition program. See reference (a) for implementation requirements for DON ACAT programs that contain critical program information and AT countermeasures. DON's AT Technical Agent (Office of Naval Research (ONR)), in support of DON's AT Technical Authority (NAVAIRSYSCOM), will assist acquisition programs in understanding AT V&V requirements, program test plan development, and interactions with the DoD V&V community.

5.4.7.13 Test and Evaluation Identification Number (TEIN) Assignment

A TEIN is required before requesting fleet support services. The TEIN assists in tracking T&E documentation, scheduling fleet services, and execution of oversight requirements. The PM shall request, in writing, a TEIN from CNO (N091) via the resource sponsor.

5.5 Developmental Test and Evaluation (DT&E)

The DA shall conduct adequate DT&E throughout the development cycle to support risk management, provide data on the progress of system development, and to determine readiness for OT. For DON programs, DT&E shall be conducted by the DA through contractor testing or government test and engineering activities. Developmental testing schedules require sufficient time to evaluate results before proceeding to independent OT phases. See reference (a), enclosure 5, for implementation requirements for all DON ACAT programs.

5.5.1 DT&E Data

Data and findings from DT&E may be used by the OTA to supplement OT&E data. Within proprietary, contractual, and regulatory considerations all DT data shall be available to appropriate oversight agencies. Data will normally be made available upon completion of analysis by the primary analyzing agency. DT data and reports shall be available for review by the OTA with adequate time to finalize OT planning (normally 30 days prior to the commencement of OT). See reference (a), enclosure 5, for implementation requirements for all DON ACAT programs.

5.5.2 Information Assurance and Security Certification during DT

IA testing and System Security Certification and Accreditation shall be conducted by the PM as part of the development process to ensure that appropriate control measures are in place to support the assigned MAC and Confidentiality Level. The MAC and Confidentiality Level should be identified in capabilities development documents and have approval of the Deputy CIO for the Navy/Marine Corps, as appropriate. Security Certification and Accreditation Testing shall be accomplished during DT by the PM in conjunction with the Security Certification and Accreditation Agent as approved by the DAA to ensure the appropriate combination of security controls and procedures have been implemented to achieve the required level of protection. Per references (e) and (f), the appropriate DAA shall provide an accreditation statement prior to the FRP DR, Full-Rate Production and Deployment Approval. The PM shall coordinate with the security certification authority, the OTA, and the DAA to determine the extent of security certification testing required.

5.5.3 Production Qualification T&E

See reference (a), enclosure 5, for implementation requirements for all DON ACAT programs.

5.6 Certification of Readiness for Operational Testing

5.6.1 DON Criteria for Certification

Per reference (a), the following criteria for certification of readiness apply to all IOT&E for all DON programs. For all OT other than IOT&E, the PM with the support of the T&E WIPT and concurrence of the OTA may tailor criteria listed below in sub items 2 through 20. The MDA may add criteria as necessary to determine readiness for OT.

1. The TEMP is current and approved. Testing prior to Milestone B shall have an approved TES as described in this enclosure, paragraph 5.3.1.

2. Test and evaluation results indicate performance thresholds identified in the TEMP have been satisfied or are projected to meet system maturity for the CDD/CPD, as appropriate.

3. All significant areas of risk have been identified and corrected or mitigation plans are in place.

4. Test results have been provided to the OTA not less than 30 days prior to the commencement of OT, unless otherwise agreed to by the OTA.

5. Entrance criteria for OT identified in the TEMP have been satisfied.

6. System operating, maintenance, and training documents have been provided to the OTA 30 days prior to the OTRR, unless otherwise agreed to by the OTA.

7. Logistic support, including spares, repair parts, and support/ground support equipment is available as documented. Discuss any logistics support which will be used during OT&E, but will not be used with the system when fielded (e.g., contractor provided depot level maintenance).

8. The OT&E manning of the system is adequate in numbers, rates, ratings, and experience level to simulate normal operating conditions.

9. Training has been completed and is representative of that planned for fleet units.

10. All resources required to execute OT including instrumentation, simulators, targets, expendables, and funding have been identified and are available.

11. Models, simulators, and targets have been accredited for intended use.

12. The system provided for OT&E, including software, is production representative. Differences between the system provided for test and production configuration shall be addressed at the OTRR.

13. Threat information (e.g., threat system characteristics and performance, electronic countermeasures, force levels, scenarios, and tactics), to include security classification, required for OT&E is available to satisfy OTA test planning.

14. The system is safe to use as planned in the concept of employment and the PM has provided the appropriate safety release(s) for the phase of test to be conducted. Any restrictions to safe employment are stated. The Environmental, Safety, and Occupational Health (ESOH) program requirements have been satisfied per references (h), (i), (j), (m), (n), (o), (p), (q), and (r). The system complies with Navy/Marine Corps ESOH/hazardous waste requirements, where applicable. ESOH/hazardous waste reviews and reports have been provided to COMOPTEVFOR or Director, MCOTEA. When an energetic is employed in the system, WSESRB criteria for conduct of test have been met.

15. All software is sufficiently mature and stable for fleet introduction. All software Trouble Reports are documented with appropriate impact analyses. There are no outstanding Trouble Reports that:

a. Prevent the accomplishment of an essential capability,

b. Jeopardize safety, security, or other requirements designated "critical,"

c. Adversely affect the accomplishment of an essential capability and no work-around solution is known, or

d. Adversely affect technical, cost, or schedule risks to the project or to life-cycle support of the system, and no work-around solution is known.

16. For software qualification testing (SQT), a Statement of Functionality that describes the software capability has been provided to COMOPTEVFOR and CNO (N091). For programs to be tested by MCOTEA, the SQT Statement of Functionality has been provided to Director, MCOTEA.

17. For aircraft programs, there are no uncorrected NAVAIRSYSCOM deficiencies that affect:

a. Airworthiness,

b. Capability to accomplish the primary or secondary mission(s),

c. Safety of the aircrew/operator/maintainer,

d. Integrity of the system or an essential subsystem,

e. Effectiveness of the operator or an essential subsystem.

18. For programs with interoperability requirements (e.g., information exchange requirements in ICD/CDD/CPDs), appropriate authority has approved the ISP and JITC concurs that program interoperability demonstrated in development has progressed sufficiently for the phase of OT to be conducted.

19. For spectrum management per reference (g), a Stage 3 "Developmental" DD-1494 (at a minimum) is required for testing.

20. For IT systems, including NSS, the system has been assigned a MAC and Confidentiality Level. System certification accreditation documents, including the Phase 2 SSAA and the IATT, IATO, or platform IT designation letter, as applicable, have been provided to the OTA.

5.6.2 Navy Procedures for Certification

The SYSCOM Commander/PEO/ DRPM/PM shall convene an OTRR prior to certifying readiness for IOT&E per reference (a). The need to conduct and the procedures for an OTRR for all OT other than IOT&E shall be determined by the SYSCOM Commander/PEO/DRPM/PM with the concurrence of the OTA and based on recommendations from the T&E WIPT. An OTRR shall consist of those members of the testing team who provide input to the certification criteria, and representatives from CNO (N091), the program sponsor, ASN(RD&A) Chief Engineer (CHSENG), and COMOPTEVFOR. For programs on OSD T&E Oversight, representatives from OUSD(AT&L) and DOT&E shall be included.

The SYSCOM Commander/PEO/DRPM shall evaluate and make a determination that a system is ready for OT&E (normally 30 days prior to OT&E). The SYSCOM Commander/PEO/DRPM shall, unless otherwise directed by ASN(RD&A) for programs on the OSD T&E Oversight List, make one of the following certifications.

5.6.2.1 Certification for OT Without T&E Exceptions

Certify to COMOPTEVFOR by message that a system is ready for OT_____(phase), as required by the TEMP, without deferrals or waivers. Provide information copies to CNO (N091), the program sponsor, ASN(RD&A) CHSENG, fleet commands, INSURV for ships, NTAB for aircraft, other interested commands, and when a program is on

the OSD T&E Oversight List, to DOT&E. See this enclosure, paragraph 5.6.4 for explanation of exceptions.

5.6.2.2 Certification for OT With T&E Exceptions

Certify to CNO (N091) by message that a system is ready for OT_____(phase), as required by the TEMP, with waiver and/or deferral requests. Provide information copies to the program sponsor (who must provide formal concurrence with proposed exceptions), ASN(RD&A) CHSENG, COMOPTEVFOR, and when a program is on the OSD T&E Oversight List, to DOT&E.

5.6.3 Marine Corps Procedures for Certification

Approximately 30 days prior to the start of an OT&E, an OTRR will be chaired and conducted by the Director, MCOTEA. OTRR participants shall include the OT&E Test Director and Assistant Test Director, representatives from the PM, ASN(RD&A) (for ACAT I and II programs), MARCORSYSCOM Assistant Commander, Programs and Chief Engineer, and Marine Corps Combat Development Command (MCCDC) (CD&I Division). The purpose of the OTRR is to determine the readiness of a system, support packages, instrumentation, test planning, and test participants to support the OT. It shall identify any problems which may impact the start or proper execution of the OT, and make any required changes to test plans, resources, training, or equipment.

CG, MARCORSYSCOM or Deputy Commander shall, unless otherwise directed by ASN(RD&A) for programs on the OSD T&E Oversight List, certify to the Director, MCOTEA, that the system is safe and ready for operational testing. This certification includes an information copy for MCCDC (CD&I Division).

Director, MCOTEA, shall select OTRR agenda issues based on a review of DT&E results and related program documentation, including certification of equipment to be safe and ready for OT&E. MCOTEA shall also review all OT&E planning for discussion at the OTRR. OTRR agenda items may be nominated by any OTRR attendee.

5.6.4 Navy T&E Exceptions

There are two types of T&E exceptions to the certification for OT.

5.6.4.1 Waivers

The term "Waivers" applies to a deviation from the criteria identified for certification in paragraph 5.6.1 of this enclosure. Waivers do not change or delay any testing or evaluation of a system.

5.6.4.2 Deferrals

The term "Deferrals" applies to a delay in testing requirements directed by the TEMP. A deferral moves a testing requirement from one test period to a later period. Deferred items cannot be used in the analysis to resolve COIs; however, the OTA may comment on operational considerations in the appropriate sections of the test report. A deferral does not change the requirement to test a system capability, function, or mission, only the timeframe in which it is evaluated.

5.6.4.2.1 When Deferrals are Appropriate

Deferrals will not normally be granted for EOAs, OAs, or any OT&E prior to IOT&E. Performance shortfalls should be identified sufficiently early to document system capability maturity in the appropriate CDD, CPD, and TEMP. When unanticipated problems with system maturity or test resources would unduly delay an OT period, deferrals provide for continued testing and efficient use of scheduled resources (e.g., ranges, operational units, and assets.

5.6.4.2.2 Limitations to Test

A deferral may result in limitations to the scope of testing that may preclude COMOPTEVFOR from fully resolving all COIs.

5.6.4.3 CNO (N091) Approval of a Deferral Request

Deferrals for OT&E periods may only be granted after the program and resource sponsors have justified that the system is necessary and useful, and adds capability to the fleet despite deviating from testing of a particular TEMP requirement. COMOPTEVFOR will then make a determination on adequacy of the test and a recommendation to conduct or delay testing because of deferral requests. The necessary programmatic inputs or changes to account for required additional test periods in which the deferred items are to be tested must be approved by the resource sponsor and official concurrence relayed to CNO (N091). For

programs on the OSD T&E Oversight List, the deferral(s) must be coordinated with DOT&E prior to CNO (N091) approval. Approval of deferral requests does not alter the associated requirement and approved deferrals shall be tested in subsequent operational testing.

5.6.5 Navy Waiver and Deferral Requests

Waivers and deferrals shall be requested in the OT&E certification message. If a waiver or deferral request is anticipated, the PM shall coordinate with the program sponsor, CNO (N912), and COMOPTEVFOR prior to the OTRR or similar review forum. Deferrals shall be identified as early as possible, normally no later than 30 days prior to OTRR. Use of the T&E WIPT or similar forum is also recommended to ensure full understanding of the impact on operational testing.

When requesting a waiver or deferral, the PM shall outline the limitations that the deferral or waiver will place upon the system under test, and their potential impacts on fleet use. Further, a statement shall be made in the OT&E certification message noting when approved deferrals will be available for subsequent OT.

5.6.6 Marine Corps Waivers

If full compliance with the certification criteria is not achieved, but the deviations are minor, MARCORSYSCOM shall request in the certification correspondence that DC,CD&I (C441) grant a waiver to allow OT to begin. Justification shall be provided for the waivers. DAs/PMs shall make every attempt to meet all of the readiness criteria before certification. If the need for a waiver is anticipated, the PM shall identify the waiver to MARCORSYSCOM (Chief Engineer) when establishing the schedule for the OTRR. Waivers shall be fully documented prior to the OTRR.

5.7 OT&E

5.7.1 Independent OT&E

Reference (a) requires an independent organization, separate from the DA and from the user commands, be responsible for all OT&E. OT&E shall be conducted by the OTA (COMOPTEVFOR or Director, MCOTEA) or an agent designated by the OTA for ACAT I, IA, II, III, and IVT programs. COMOPTEVFOR and the Director, MCOTEA are responsible for planning and conducting OT&E,

reporting results, providing evaluations of each tested system's operational effectiveness and suitability, and identifying and reporting system deficiencies. Additionally, COMOPTEVFOR is responsible for providing inputs to tactics, as appropriate, and making recommendations regarding fleet introduction. OT shall determine whether thresholds in the CDD/CPD have been satisfied. See reference (a), enclosure 5, for implementation requirements for all DON ACAT programs requiring OT&E.

5.7.1.1 Navy Start of OT&E

COMOPTEVFOR may commence operational testing upon receipt of a certification message unless waivers or deferrals are requested. When waivers or deferrals are requested, COMOPTEVFOR may start testing upon receipt of waiver or deferral approval from CNO (N091). COMOPTEVFOR shall issue a start test message when OT begins.

5.7.1.2 Navy De-certification and Re-certification for OT&E

When evaluation of issued deficiency/anomaly reports or other information indicates the system will not successfully complete OT&E, de-certification may be originated by the SYSCOM Commander/PEO/DRPM, after coordination with the program sponsor and PM, to withdraw the system certification and stop the operational test. Withdrawal of certification shall be accomplished by message to CNO (N091) and COMOPTEVFOR stating, if known, when the system will be evaluated for subsequent certification and restart of testing. When a system undergoing OT&E has been de-certified for OT, the SYSCOM Commander/PEO/DRPM must re-certify readiness for OT&E prior to restart of OT per paragraph 5.6.2.

5.7.2 OT&E Plans

See reference (a), enclosure 5, for implementation requirements for all DON ACAT programs requiring OT&E. ACAT I, II, and programs on the OSD T&E Oversight List require DOT&E approval.

5.7.3 Operational Test (OT) for Configuration Changes

The DA shall ensure that T&E planning includes OT&E for significant configuration changes or modifications to the system. These OT&E events are necessary for the OTA to substantiate a

fleet release/introduction recommendation to the CNO/CMC for all systems.

5.7.4 OT for Information Assurance and System Security Certification and Accreditation

All weapon, C4ISR, and information programs shall be tested and evaluated for appropriate application of information assurance (IA) (reference (a)). Systems shall incorporate IA controls identified in reference (d), based upon the objective of MAC and Confidentiality Level. The OTA shall operationally test and evaluate IA controls (i.e. people, technology, and operations) to the level of robustness specified by the objective of the MAC and Confidentiality Level against DIA/ONI validated IA threats per reference (c). IA controls should be evaluated for adequacy and tested for compliance. Evaluation of the SoS or FoS in which the subject system operates should be minimized to the scope necessary to resolve COIs for the subject system.

5.7.5 Quick Reaction Assessment (QRA)

When an urgent operational need is identified for a system in development or when a system has been granted RDC status (as defined in enclosure (2), paragraph 2.8) by ASN(RD&A), it may be necessary to modify the established OT process to rapidly deliver that capability to the fleet. In such cases, the program sponsor may obtain an OTA assessment of operational effectiveness, suitability, and considerations for deploying the system. Navy program sponsors may request a QRA from CNO (N091). USMC program sponsors may request a QRA from Director, MCOTEA. When approved, COMOPTEVFOR or Director, MCOTEA should conduct the assessment and issue a report as soon as possible. The following information should be included in the QRA request:

1. The purpose of the assessment and, specifically, what system attributes the program sponsor wants assessed.

2. The length of time available for the assessment.

3. The resources available for the assessment.

4. Which forces will deploy with the system prior to IOC.

QRAs do not obviate or replace scheduled OT in an approved TEMP for programs of record. Systems in RDC status that have completed QRA will normally undergo formal OT when they transition to program status.

5.7.6 OT&E Information Promulgation

See reference (a), enclosure 5, and this enclosure, paragraph 5.11, T&E Reports, for implementation requirements for all DON ACAT programs requiring OT&E.

5.7.6.1 Milestone Decision Authority (MDA) Briefing

See reference (a), enclosure 5, for implementation requirements for DON ACAT I and IA programs and programs on the OSD T&E Oversight List. The OTA will brief the results of program OTs at MDA decision meetings.

5.7.7 Use of Contractors in Support of OT&E

See reference (a), enclosure 5, for implementation requirements for all DON ACAT programs requiring OT&E.

5.7.8 Visitors

During operational testing, observers and other visitors are authorized at the discretion of COMOPTEVFOR, or Director, MCOTEA, as appropriate.

5.8 Annual Office of the Secretary of Defense (OSD) T&E Oversight List

The annual OSD T&E Oversight List identifies those DON programs subject to OSD T&E oversight. ACAT I, II, and programs requiring LFT&E are generally included in oversight. Other programs that generate Congressional, public, or special interests are routinely included in the listing. DON T&E information related to programs on the OSD T&E Oversight List will be coordinated through CNO (N091) for Navy programs. PMs for USMC programs subject to OSD T&E oversight will coordinate DT information, and Director, MCOTEA, will coordinate OT information.

5.9 Live Fire Test and Evaluation (LFT&E)*

The DA is responsible for LFT&E strategy development, associated TEMP input, monitoring, and supporting the conduct of LFT&E. Per reference (a), DOT&E shall approve the LFT&E strategy for programs covered by statute prior to the decision to enter into SDD (normally Milestone B). For USMC programs not required

by statute to conduct LFT&E, but where LFT&E is appropriate, the Director, MCOTEA, shall concur with the LFT&E strategy as approved by the MDA in the TES or TEMP.

Per 10 U.S.C. Section 2366, realistic survivability and lethality testing shall be completed, the report submitted, and results considered, prior to making a beyond LRIP decision.

Survivability and lethality tests required by statute must be completed early enough in the SDD phase to allow correction of any design deficiency before proceeding beyond LRIP.

LFT&E events deemed necessary prior to Milestone B may be conducted under a stand-alone plan (in lieu of an approved TEMP). The intention of this policy is to facilitate agreement between developers and oversight agencies. This stand-alone plan for pre-Milestone B LFT&E events will follow the same approval process as prescribed for a TEMP. The stand-alone plan should be limited in scope and address only objectives of the pre-Milestone B LFT&E events. Subsequently, the stand-alone plan should be integrated into the TEMP.

Each program increment or modification requires a review for LFT&E requirements. If such requirements are found to exist, they must be addressed through the TEMP process.

See reference (a), enclosure 5, for implementation requirements for a program that is a covered major system, a major munitions program, a missile program, or a product improvement (modification) thereto. A covered major system means a vehicle, weapon platform, or conventional weapon system that provides some degree of protection to users in combat and is a major system per 10 U.S.C. Section 2302(5). A major munitions program means a program that is planning to acquire more than a million rounds or is a conventional munitions program that is a major system.

*Not applicable to ACAT IA programs.

5.10 Comparative Testing

5.10.1 Programs Defined by Statute

10 U.S.C. Section 2350a(g) and 2359b establish two programs: the Foreign Comparative Testing (FCT) Program and the Defense Acquisition Challenge Program (DACP). The FCT program tests allied or friendly nations' defense equipment, munitions,

and technologies to see if they can satisfy DoD needs. DACP allows non-DoD entities to propose technologies, products, or processes to existing DoD acquisition programs. At the OSD level, both FCT and DACP are managed by the Comparative Testing Office (CTO) (http://www.acq.osd.mil/cto/organization.htm) under USD (AT&L/DDRE/DUSD(AS&C)).

5.10.2 Navy Management of Comparative Testing

1. For FCT: Navy International Programs Office (Navy IPO) (https://www.nipo.navy.mil/)

2. For DACP: Office of Naval Research (ONR), Code 36, DACP Office

(Note: As of the date of this publication, Navy management of DACP is under review and may change.)

5.10.3 Developing Activity (DA) Comparative Testing Responsibilities

DAs shall follow comparative testing guidance provided by OSD (CTO) and the Navy points of contact cited above. Where comparative testing is a major portion of an acquisition program, it should be included in the TEMP. Comparative testing derived components of an acquisition program shall be treated like contractor Non-Developmental Items (NDI). Acquisition programs, that include comparative testing derived items, are not exempt from DT, OT, or LFT&E provisions of this instruction. Reference (a), enclosure 5, provides DoD direction on comparative test programs.

5.11 Test and Evaluation Reporting

This paragraph describes mandatory T&E reporting requirements for DON ACAT programs as indicated in subsequent paragraphs. Per reference (a), enclosure 5, section 5.4.8, DOT&E and the Deputy Director for DT&E/Office of Defense Systems (DS) in the Office of the USD (AT&L) shall have full and timely access to all available developmental, operational, and live-fire T&E data and reports. The Defense Technical Information Center (DTIC) provides distribution guidance.

5.11.1 DoD Component (DON) Reporting of Test Results

See reference (a), enclosure 5, for implementation requirements for DON ACAT I, selected ACAT IAM, and other ACAT

programs designated for OSD T&E oversight.

5.11.1.1 DT&E Reports

A report of results for all DT&E conducted in DON shall be provided to the appropriate decision authority and to the OTA as needed. For programs on the OSD T&E Oversight List subject to DOT&E oversight, the DA shall provide copies of formal DT&E reports to the Deputy Director, DT&E in the Office of Defense Systems (ODS) in the Office of the Under Secretary of Defense (Acquisition, Technology and Logistics)(OUSD(AT&L)) and COMOPTEVFOR/Director, MCOTEA at a pre-agreed timeframe prior to program decision point reviews. Copies of DT&E reports for all ACAT I programs shall be provided to the Defense Technical Information Center (DTIC) with the Report Documentation Page (SF 298). Copies of Navy internal DT&E event reports shall be forwarded to CNO (N091); the Deputy Director, DT&E; and ASN(RD&A) CHSENG. Unless otherwise coordinated, DT&E reports shall be provided to the OTA at least 30 days prior to start of OT. See reference (s) for distribution statements required on technical publications and reference (t) for principles and operational parameters on DoD Scientific and Technical Information programs.

5.11.1.2 Navy OT&E Reports

COMOPTEVFOR shall issue operational test reports for ACAT I and IA programs within 90 days following completion of testing. All other operational test reports are due within 60 days of test completion. Programs subject to OSD T&E oversight shall provide copies of formal OT&E reports to DOT&E per pre-agreed timeframe prior to program decision reviews. When scheduling a FRP DR, schedulers shall consult DOT&E as to time required to prepare and submit the beyond LRIP report. Copies of OT&E reports for all ACAT I programs, except those which contain vulnerabilities and limitations data for key war-fighting systems, shall be provided to the DTIC with the Report Documentation Page (SF 298). For OSD oversight program T&E events, as defined in the TEMP, copies of Navy OT&E reports shall be forwarded via CNO (N091) to DOT&E and ASN(RD&A) CHSENG. See reference (s) for distribution statements required on technical publications and reference (t) for principles and operational parameters on DoD Scientific and Technical Information programs.

5.11.1.3 Marine Corps Operational Test Reports (TRs)

After OT, the FMF shall write the Test Director test report. The TR shall address the collection, organization, and

processing of information derived from the OT and is a key source of information from which the independent evaluation report (IER) is written. The report also documents the overall potential of the system to meet operational effectiveness and suitability thresholds. The TR shall be forwarded via the appropriate Marine Force, to arrive at MCOTEA no more than 30 days after the end of the test. The PM does not have a role in developing or reviewing the TR. TRs that will be used to support acquisition activities such as "Down Selects" shall be marked "For Official Use Only" (FOUO) by the Director, MCOTEA and handled appropriately.

Once approved, MCOTEA shall distribute it to the MDA, PM, FMF, ASN(RD&A) CHSENG, and others concerned including DOT&E for ACAT I, selected ACAT IA, and other OSD T&E oversight programs. Release of the observed test results prior to completion of analysis is as deemed appropriate by the Director, MCOTEA.

The results of EOAs and OAs shall be reported directly to the PM. The time and format for these assessment reports shall be determined by MCOTEA and the PM.

5.11.2 LFT&E Report for FRP DR*

For programs involving covered major systems, major munitions or missiles, or product improvements (modifications) thereto, the DA shall submit a LFT&E report to DOT&E, via CNO (N091) or Director, MCOTEA, as appropriate. The submission shall allow DOT&E sufficient time to prepare an independent assessment and submit it to Congress prior to the program proceeding into FRP. PMs shall keep CNO (N091) apprised of the program’s LFT&E progress and execution. See reference (a), enclosure 5, for implementation requirements for programs subject to LFT&E statutes.

*Not applicable to ACAT IA programs.

5.11.2.1 LFT&E Waivers*

Request to waive full-up system-level live fire survivability and lethality testing must be submitted by USD(AT&L) for ACAT ID programs or ASN(RD&A) for ACAT IC programs and below and approved by DOT&E prior to entry into SDD. Waiver requests not approved prior to SDD require Congressional relief granted to SECDEF on a case-by-case basis. Waivers shall be coordinated with the program sponsor and CNO (N091) or Director,

MCOTEA, as appropriate. Programs seeking LFT&E waivers must provide an alternate LFT&E strategy and plan that are acceptable to DOT&E.

*Not applicable to ACAT IA programs.

5.11.3 Beyond Low-Rate Initial Production (LRIP) Report

ACAT I and IA programs and programs on the OSD T&E Oversight List designated by DOT&E, shall not proceed beyond LRIP until DOT&E has submitted a written report to the Secretary of Defense and the Congress as required by 10 U.S.C. Section 2399. See reference (a), enclosure 5, for the beyond LRIP report for designated OSD T&E oversight programs.

5.11.4 Director, Operational Test and Evaluation (DOT&E) Annual Report

DOT&E prepares an annual report of programs subject to OT&E on the OSD T&E Oversight List and all programs covered by live fire test and evaluation during the preceding fiscal year. The report covers basic program description, test and evaluation activity, and provides the Director's assessment of the T&E. CNO (N912) coordinates efforts to review and validate factual information to support DOT&E requests in the development of the report. DON acquisition and test agencies may be tasked by CNO (N912) to assist in this effort.

5.11.5 Foreign Comparative Test Notification and Report to Congress*

The Deputy Under Secretary of Defense Advanced Systems and Concepts (DUSD (AS&C)) shall notify Congress a minimum of 30 days prior to the commitment of funds for initiation of new foreign comparative test evaluations. See reference (a), enclosure 5, for implementation requirements for DON ACAT programs involved in foreign comparative testing.

*Not applicable to ACAT IA programs.

5.11.6 Electronic Warfare (EW) T&E Report

See reference (a), enclosure 3, for implementation requirements for designated DON EW programs.

Chapter 6
Resource Estimation

References: (a) DOD Instruction 5000.2, Operation of the Defense Acquisition System, of 12 May 03
(b) USD(P&R) Memorandum, Interim Policy and Procedures for Strategic Manpower Planning and Development of Manpower Estimates, of 10 Dec 03
(c) USD(AT&L) Memorandum, Revision to DoD Earned Value Management Policy, of 7 Mar 05
(d) SECNAVINST 5420.188F

6.1 Resource Estimates

See reference (a), enclosure 6, for implementation requirements for all Department of the Navy (DON) Acquisition Category (ACAT) programs.

6.1.1 Life-Cycle Cost Estimates

DON policy for conducting Independent Cost Estimates (ICEs) of the life-cycle cost of Major Defense Acquisition Programs (MDAPs) and component cost analyses of Major Automated Information Systems (MAISs) is summarized in the basic instruction, paragraph 7h.

The Naval Center for Cost Analysis (NCCA), which reports directly to the Assistant Secretary of the Navy (Financial Management and Comptroller) (ASN(FM&C)), shall chair a DON Cost Analysis Improvement Group (CAIG) review of program office and independent life-cycle cost estimates and component cost analyses to support major milestone decisions for those programs listed in the basic instruction, paragraph 7h. Formal presentations of estimates will be made to the Director, NCCA. Differences in estimates will be noted, explained, and documented in a memorandum from NCCA to ASN(RD&A).

NCCA will not conduct ICEs on ACAT II, III, or IV programs unless specifically directed to do so by ASN(FM&C) or requested by ASN(RD&A). Systems Command's (SYSC0M's) cost estimating organizations may conduct ICEs for ACAT II, III, and IV programs when required by the MDA.

6.1.2 Cost Analysis Requirements Description (CARD)

A CARD shall be prepared for ACAT I and IA programs prior to preparation of the ICE and the program office life-cycle cost estimate. A CARD shall also be prepared for ACAT II programs when an ICE is required by the MDA. See reference (a), enclosure 6, for implementation requirements for DON ACAT I and IA programs.

6.1.3 Manpower Estimates*

Manpower estimates are required by statute for ACAT I programs. Manpower estimates shall also be developed for other ACAT programs that are manpower significant at the request of the Component manpower authority per reference (b). CNO (N12) and CMC (Deputy Commandant, Manpower and Reserve Affairs (DC,M&RA)) are the designated Navy and Marine Corps Component manpower authorities, respectively. For ACAT ID programs, CNO (N12)/CMC (DC,M&RA) shall forward approved manpower estimates to the office of the Under Secretary of Defense (Personnel and Readiness). Additional policy and guidance on the development of manpower estimates (including required submission timeline, content/format, and use of manpower estimates) is provided in reference (c).

*Not applicable to ACAT IA programs.

6.2 Affordability

No acquisition program shall be approved to proceed beyond program initiation unless sufficient resources are programmed in the most recent Future Years Defense Program (FYDP), or written assurance is given that it will be programmed in the Planning, Programming, Budgeting, and Execution System (PPBES) cycle. Program affordability analysis, including life-cycle costs, shall be assessed and reported at each program decision point. See reference (a), paragraph 3.7.2.6, for implementation requirements for all DON ACAT programs.

Full funding to support approved ACAT programs shall be included in each program’s budget submission. Full funding shall include costs associated with interfaces with other programs. Full funding in this regard means annual submission of financial requirements by the Program Manager (PM) for total program costs. CNO/CMC shall ensure funding requirements for ACAT programs, Abbreviated Acquisition Programs (AAPs), non-

acquisition programs, and Rapid Deployment Capability (RDC) programs are satisfied in the development of each PPBES phase.

FYDP or budgeted funding shall be shown at each program decision point (except Milestone A) or other Program Review (PR).

If the MDA selects an alternative which exceeds FYDP or budgeted resources, then the need for additional resources shall be identified to CNO (N8)/CMC (DC,P&R). CNO (N8)/CMC (DC,P&R) shall forward the recommended resource action to Secretary of the Navy (SECNAV), ASN(RD&A), or MDA, as appropriate, with a copy to ASN(RD&A)(if not the MDA) and ASN(FM&C) prior to formal Acquisition Decision Memorandum (ADM) approval to proceed with the restructured program. SECNAV, ASN(RD&A), or the MDA, as appropriate, shall direct appropriate action.

6.3 Contract Management Reports

The reports prescribed below shall be used for all applicable defense contracts as they aid in effective resource management. Use of electronic data interchange shall be required provided that such media are suitable for management use. The Work Breakdown Structure (WBS) used in preparing reports covered by this section should conform to the standard Department of Defense (DoD) WBS (see MIL-HDBK-881A). Copies of Earned Value Management (EVM) Contract Performance Reports (CPRs), Integrated Master Schedules (IMSs), and Contract Funds Status Reports (CFSRs) for ACAT I programs will be provided to the Office of the Secretary of Defense's (OSD's) Defense Cost and Resource Center (DCARC) at the Earned Value Management Central Repository (EVM CR) at http://dcarc.pae.osd.mil/EVM/Index.aspx. All ACAT I programs and contractors listed in EVM Contract Data Requirements Lists (CDRLs) shall register with the EVM CR at the above Web site. All ACAT I program EVM CDRLs are to list DCARC as a Distribution Addressee for EVM reports. Prime contractors are responsible for flowing down EVM CDRL reporting requirements to subcontractors that meet the reporting thresholds. Subcontractors are to submit EVM reports electronically direct to DCARC.

6.3.1 Contractor Cost Data Reporting (CCDR) for Hardware and Software -- (DID DI-FNCL-81565B/81566B/81567B) and Software Resources Data Report (SRDR) -- (DID DI-MGMT-81739/81740)

CCDRs are mandatory for cost or incentive contracts, subcontracts, intra-government work agreements, and other agreements valued at or greater than $50 million in then-year dollars for ACAT I and IA programs. SRDRs are mandatory for all contracts and subcontracts, regardless of contract type, for ACAT ID, IC, IAM, and IAC programs when any software development element is projected to cost more than $20 million in then-year dollars. The OSD CAIG is the approval authority for CCDR and SRDR plans for these programs. NCCA will assist the CAIG in reviewing these plans for ACAT IC, IAM, and IAC programs.

Copies of CCDRs for ACAT I programs and SRDRs for ACAT I and IA programs shall be provided electronically to OSD's Defense Cost and Resource Center (DCARC) at http://dcarc.pae.osd.mil/. All ACAT I and IA programs and contractors listed in CCDR and SRDR Contract Data Requirements Lists (CDRLs) shall register with the DCARC at the above Web site. All ACAT I and IA program CCDR and SRDR CDRLs are to list DCARC as a Distribution Addressee for CCDR and SRDR reports. Prime contractors are responsible for flowing down CCDR and SRDR CDRL reporting requirements to subcontractors that meet the reporting thresholds. Subcontractors are to submit CCDR and SRDR reports electronically direct to DCARC.

See reference (a), enclosure 6, paragraph E6.3, and this instruction, enclosure (3), Table E3T3, for implementation requirements for applicable ACAT programs.

6.3.2 Contract Performance Report (CPR) -- (DID DI-MGMT-81466A)

PMs shall use the following guidelines in developing CPR reporting requirements:

1. CPRs are required for cost or incentive contracts, subcontracts, intra-government work agreements, and other agreements valued at or greater than $20 million in then-year dollars per reference (c), USD(AT&L) memorandum of 7 March 2005. CPRs may be tailored when such contracts, subcontracts, or agreements are valued at less than $50 million in then-year dollars per the Department of Defense Earned Value Management Implementation Guide (EVMIG). Additional CPR requirement thresholds, tailoring guidance, and submission formats are contained in the DoD EVMIG.

2. CPR detail shall be designated at the level of the contract WBS necessary to facilitate effective data collection, management, and reporting.

3. CPRs shall be discussed during Integrated Baseline Reviews (IBR) (see The Program Managers' Guide to the Integrated Baseline Review Process).

4. CPRs shall be provided in a readable digital format, e.g., the American National Standards Institute (ANSI) X12 standard (839 transaction set), the United Nations Electronic Data Interchange for Administration, Commerce and Transport (UN/EDIFACT) standard (PROCST message), or the XML equivalent per the DoD EVMIG. Additionally for ACAT I programs, CPRs shall include on distribution OSD's DCARC EVM CR.

6.3.3 Integrated Master Schedule (IMS) -- (DID DI-MGMT-81650)

PMs shall use the following guidelines in developing IMS reporting requirements:

1. IMS reporting is required for cost or incentive contracts, subcontracts, intra-government work agreements, and other agreements valued at or greater than $20 million in then-year dollars per reference (c), USD(AT&L) memorandum of 7 March 2005. IMS reporting may be tailored when such contracts, subcontracts, or agreements are valued at less than $50 million in then-year dollars per the DoD EVMIG. Additional IMS requirement thresholds, tailoring guidance and submission formats are contained within the DoD EVMIG.

2. IMS detail shall be maintained at the contract WBS level necessary to facilitate data collection, management and reporting.

3. IMS shall be discussed during IBR (see The Program Managers' Guide to the Integrated Baseline Review Process).

4. IMSs shall be provided in native digital format to the PM for all applicable programs and for ACAT I programs shall include on distribution the DCARC EVM CR.

6.3.4 Contract Funds Status Report (CFSR) -- (DID DI-MGMT-81468)

PMs shall use the following guidelines in developing CFSR reporting requirements:

1. The PM shall obtain a DD Form 1586 Contract Funds Status Report (CFSR) on cost or incentive contracts and subcontracts over 6 months in duration and valued at or greater than the threshold in subparagraph 2 below. The CFSR provides the PM with information to update and forecast contract funding requirements; to plan and decide on funding changes; to develop funding requirements and budget estimates in support of approved programs; and to determine funds in excess of contract needs and available to be deobligated. PMs shall use DID DI-MGMT-81468 to obtain the CFSR.

2. The CFSR has a specific application threshold for all cost or incentive contracts and subcontracts valued at or greater than $20 million (in then year dollars) for all ACAT programs; however, the PM shall carefully evaluate application to cost or incentive contracts and subcontracts of less than $20 million (in then-year dollars). The PM shall require only the minimum information necessary for effective management control. FFP contracts shall not require the CFSR unless unusual circumstances dictate specific funding visibility.

3. CFSRs shall be provided in a readable digital format, e.g., the American National Standards Institute (ANSI) X12 standard (839 transaction set), the United Nations Electronic Data Interchange for Administration, Commerce and Transport (UN/EDIFACT) standard (PROCST message), or the XML equivalent per the DoD EVMIG. Additionally for ACAT I programs, CFSRs shall include on distribution the OSD's DCARC EVM CR.

6.4 Analysis of Alternatives (AoA)

The Gate 1 and Gate 2 processes of enclosure (2), paragraphs 2.11.4.1.1.1 (Gate 1) and 2.11.4.1.1.2 (Gate 2) amplify the AoA processes defined below and the guidance in DON Acquisition and Capabilities Guidebook, paragraph 6.4.

6.4.1 Weapon System AoA

The cognizant Program Executive Officer (PEO)/SYSCOM Commander/Direct Reporting Program Manager (DRPM), or ASN(RD&A), and Chief of Naval Operations (CNO)/Commandant of the Marine Corps (CMC), but not the PM, shall have overall responsibility

for the Analysis of Alternatives (AoA). The CNO/CMC, or designee, shall propose an AoA Plan in coordination with an AoA Integrated Product Team (IPT), under the overall guidance of the Acquisition Coordination Team (ACT) where established (see reference (d)). All AoAs shall include analysis of Doctrine, Organization, Training, Materiel, Leadership and education, Personnel, and Facilities (DOTMLPF) and joint implications. Common systems shall be included as one of the alternatives when one may provide the needed capability. A director shall be assigned to conduct each AoA. The AoA Plan shall be approved at Concept Decision (CD), which begins the Concept Refinement phase, by: ASN(RD&A) or designee and CNO (N81)/CMC (Deputy Commandant, Combat Development and Integration (DC,CD&I)) for ACAT ID programs; MDA or designee and CNO (N81)/CMC (DC,CD&I) for ACAT IC, II, and III programs; and MDA and CNO (N81)/CMC (DC,CD&I) for ACAT IV programs.

6.4.2 IT AoA

The process used for weapon system AoAs shall also be used for IT AoAs tailored as appropriate. All IT AoAs shall analyze DOTMLPF implications. Process redesign shall be considered in the AoA as a key factor that impacts both the cost and effectiveness of each alternative evaluated. Total ownership cost thresholds and objectives in the CDD/CPD may reflect reduced costs associated with process redesign.

6.5 Cost as an Independent Variable (CAIV)

The CAIV concept shall be applied to all DON ACAT programs as described in the Defense Acquisition Guidebook.

6.5.1 Cost/Schedule/Performance Tradeoffs

For DON ACAT IC, IAC, and II programs, an ACT shall be used to provide cost-performance tradeoff analysis support, as appropriate. Cost-performance tradeoffs shall also be performed for ACAT III and IV programs and an ACT, if established, shall provide tradeoff support as approved by the MDA.

Chapter 7
Systems Engineering and Human Systems Integration

References:
(a) DOD Directive 5000.1, The Defense Acquisition System, of 12 May 03
(b) DOD Instruction 5000.2, Operation of the Defense Acquisition System, of 12 May 03
(c) OPNAVINST 3960.16A
(d) SECNAVINST 4140.2
(e) DOD 4140.1-R, DoD Supply Chain Material Management Regulation, of 23 May 03
(f) ISO 9001 Quality Management Systems - Requirements Supplemented by AS9100 International Aerospace Quality Standard
(g) Chairman of the Joint Chiefs of Staff Instruction (CJCSI) 3170.01F, Joint Capabilities Integration and Development System, of 1 May 07
(h) Chairman of the Joint Chiefs of Staff Manual (CJCSM) 3170.01C, Operation of the Joint Capabilities Integration and Development System, of 1 May 07
(i) DOD Directive 4630.05, Interoperability and Supportability of Information Technology (IT) and National Security Systems (NSS), of 5 May 04
(j) DOD Instruction 4630.8, Procedures for Interoperability and Supportability of Information Technology (IT) and National Security Systems (NSS), of 30 Jun 04
(k) CJCSI 6212.01D, Interoperability and Supportability of Information Technology and National Security Systems, of 8 Mar 06
(l) MCO 3093.1C, Intraoperability and Interoperability of Marine Corps Tactical C4I2 Systems, of 15 Jun 89
(m) SECNAVINST 5000.36A
(n) NAVSEAINST 9410.2/NAVAIRINST 5230.20/SPAWARINST 5234.1, Naval Warfare Systems Certification Policy, of 18 Jul 05
(o) MARCORSYSCOM, C4I Integration and Interoperability Management Plan, of 2 Sep 05
(p) OPNAVINST 9070.1
(q) Assistant Secretary of the Navy (Research, Development and Acquisition) Memorandum, DON Policy on Digital Product/Technical Data, of 23 Oct 04

(r) Office of Management and Budget (OMB) Circular A-119, Federal Participation in the Development and Use of Voluntary Consensus Standards and in Conformity Assessment, of 10 Feb 98
(s) CJCSI 3901.01B, Requirements For Geospatial Information and Services, of 15 Jul 04
(t) OPNAVINST 5430.56
(u) DOD Directive 4650.1, Policy for Management and Use of Electromagnetic Spectrum, of 8 Jun 04
(v) DOD Directive 3222.3, DoD Electromagnetic Environmental Effects (E3) Program, of 8 Sep 04
(w) DOD Directive 1322.18, Military Training, of 3 Sep 04
(x) OPNAVINST 9640.1A
(y) SECNAVINST 5100.10J
(z) SECNAVINST 5420.188F
(aa) Military Standard (MIL-STD) 882D, Standard Practice for System Safety, of 10 Feb 00
(ab) 32 CFR 775, Procedures For Implementing The National Environmental Policy Act
(ac) 32 CFR 187, Environmental Effects Abroad of Major Department of Defense Actions
(ad) OPNAVINST 5090.1C
(ae) MCO P5090.2A, Environmental Compliance and Protection Manual, of 10 Jul 98
(af) Assistant Secretary of the Navy (Installations and Environment) Memorandum 99-01, Requirements for Environmental Considerations in Test Site Selection, of 11 May 99
(ag) National Aerospace Standard (NAS) 411, Hazardous Materials Management Program, of 29 Apr 94
(ah) OPNAVINST 8020.14/MCO P8020.11
(ai) Public Law 108-136, National Defense Authorization Act for Fiscal Year 2004, Section 802, Quality Control In Procurement Of Aviation Critical Safety Items And Related Services, of 24 Nov 03

7.1 Systems Engineering

The Program Manager (PM) is accountable for accomplishing program objectives for total life-cycle systems management, including sustainment (total systems approach, per references (a) and (b)). PMs shall employ systems engineering as a mechanism to achieve the program objectives of optimal total system performance (hardware, software, human, firmware, safety,

shock/vibration, training, maintenance, logistics, and other total system performance factors) and minimal total ownership cost (TOC). PMs shall employ a comprehensive, structured, integrated and disciplined systems engineering approach to the life-cycle design of weapons, Information Technology (IT), and support systems and their integration and interoperability (achieved through net-centric operations). Systems engineering focuses on defining user needs, usability, and required functionality early in the development cycle, documenting requirements, then proceeding with design synthesis and system validation to achieve the total capability. It includes the hardware, software and human operators, maintainers, support personnel, and the operating environment. It also focuses on individual systems and includes System of Systems (SoS) and/or Family of Systems (FoS) considerations.

PMs shall ensure development activities implement the procedures necessary to concurrently design products and their associated implementing processes to ensure product and process development integration. Development efforts shall result in an optimal product design along with its associated manufacturing, test, and support processes needed to meet the user's needs to achieve life-cycle system cost and performance objectives.

PMs shall use a systems engineering process to translate operational requirements/capability needs into a system solution that includes the design, Human Systems Integration (HSI), test, manufacturing and support processes and products. The system engineering process shall be documented in a Systems Engineering Plan (SEP) describing how this process relates to the overall program, how the technical baseline will be managed, and how technical reviews and technical authority reports will be used as a means to ascertaining program technical risk. The Office of the Under Secretary of Defense (Acquisition, Technology and Logistics) Systems and Software Engineering/Enterprise Development (OUSD(AT&L)SSE/ED) SEP Preparation Guide version 2.01 of Apr 08 provides a recommended content for SEPs. The SEP shall also address development of a system's architecture using the DoD Architecture Framework, the FORCEnet integrated architecture, and the Naval open architecture. The SEP for IT systems, including National Security Systems (NSS), shall also address the degree of compliance with the FORCEnet Consolidated Compliance Checklist (FCCC). The FCCC is available in the CNO (N6/N7) FORCEnet Compliance Policy Memorandum of 27 May 2005. PMs shall coordinate with their program and resource sponsors for the latest version of the FCCC.

The subject areas in this enclosure shall be part of the systems engineering process and their impact on the development and production of the product design shall be determined with respect to total system cost, schedule, performance (including human performance), and technical risk (including interoperability, net-centricity, SoS/FoS, and integration). PMs shall provide for independent technical review and independent technical risk assessment of programs.

7.1.1 Manufacturing and Production

Manufacturing and production planning considerations shall be identified early in the acquisition and design processes to identify key product and process characteristics and to ensure that validated process controls are implemented prior to production. This planning should include issues such as long-lead material, unique processes, unique identification (including radio frequency identification) [see http://www.acq.osd.mil/dpap/UID/], tooling, parts and material obsolescence, and calibration per reference (c). For aviation programs, reference (d) issues specific requirements for manufacture and production planning of critical safety items and associated critical and major characteristics and critical processes.

PMs shall establish a Diminishing Manufacturing Sources and Material Shortages (DMSMS) program to proactively identify, resolve, and eliminate any negative impacts from DMSMS throughout all phases of a program's life-cycle as identified in reference (e).

A DMSMS Plan is required for all acquisition category (ACAT) programs (including joint programs) that include embedded microelectronics per Assistant Secretary of the Navy (Research, Development and Acquisition) (ASN(RD&A)) memorandum of 27 January 2005 as amplified by DASN(L) memorandum of 12 April 2005 with attachment (1) DMSMS Management Plan Guidance. A DMSMS Plan shall cover all phases of a program's life-cycle. Programs that retire prior to January 2007 are not required to prepare a DMSMS Plan. PMs shall manage obsolescence at the piece part level for all active microelectronics, unless otherwise supported by a business case analysis. Performance Based Logistics (PBL) agreements shall address mitigation of DMSMS risk to their program and the government.

7.1.2 Quality

A process shall be in place to assure product quality during design, development, manufacturing, production, and sustainment. Quality is determined by the extent that products and services meet requirements and satisfy the customer at an affordable cost. A quality system should monitor, measure, analyze, control and improve processes. Quality practices and quality requirements consistent with program complexity and criticality shall be used to assist in reducing risk, assuring quality, and controlling costs. For aviation programs, reference (d) includes specific requirements for inspection and other quality assurance requirements for critical safety items.

Reference (f) is a model for quality management systems. Contractors may propose alternative systems, as long as they are found technically acceptable by the SYSCOM technical authority and accomplish program objectives.

7.1.3 Acquisition Logistics and Sustainment

The PM shall plan, manage, and execute acquisition logistics, sustainment, and logistics funding requirements. The logistics support strategy, documented in the acquisition strategy (and which may also be further documented in a discretionary logistics supportability plan), shall be assessed, developed, and integrated concurrent with the new/improved capability/system such that short-term logistics support will be in-place at system Initial Operational Capability (IOC). Logistics support shall be sufficient, starting at IOC, to sustain operations to Capability Development/Production Document (CDD/CPD) (i.e., CDD/CPD per reference (g) and (h)) specified levels of performance and affordability. Long-term logistics support shall be in place at system Full Operational Capability (FOC). Continuous Process Improvement (CPI) methodologies and tools shall be used to maximize and continuously improve sustained material readiness, reduce cycle time and variability, and minimize life-cycle cost. Particular emphasis shall be applied to mitigation of the occurrence of parts and material obsolescence events. Logistics supportability shall be implemented with an emphasis on designing in supportability from the identification of the requirement through the acquisition process to FOC.

The resource sponsor shall ensure adequate funding for acquisition logistics support and sustainment. Recommendations for entry into subsequent phases should be based on adequate

support resources being budgeted to meet and sustain support performance threshold values. The PM shall ensure that logistics funding requirements, for each increment of the system's development, shall be documented in a funding plan to identify resource requirements (in terms of the amount, source/appropriation, and requiring financial manager (RFM) for resources) needed for current and out-year logistics execution. The funding plan shall ensure adequate funding has been budgeted to fully support the end item. The funding plan shall be required at program initiation and updated annually to ensure the life-cycle logistics management planning resource requirements are the primary logistics source for the Program Objective Memorandum (POM) in the Planning, Programming, Budgeting, and Execution System (PPBES).

Gate 6 Sufficiency Reviews will address acquisition logistics and sustainment per enclosure (2), paragraph 2.11.4.3.1.2 (Gate 6).

7.1.4 Open Architecture

PMs shall comply with Naval open architecture which shall be applied as an integrated technical approach and used for all systems, including support systems per ASN(RD&A) memorandum of 5 August 2004 and CNO (N6/N7) memorandum of 23 December 2005 with enclosure (1). Open architecture shall be addressed in the acquisition strategy and the SEP as appropriate.

7.1.5 Reliability, Availability, and Maintainability (RAM)

Quantitative RAM, including built-in-test (BIT), performance requirements (e.g., CDD/CPD per references (g) and (h)), shall be translated into appropriate design requirements along with supporting design analyses and tests (e.g. design reference mission profile; predictions; failure mode effects and criticality analysis; accelerated life tests; BIT demonstrations; failure reporting, analysis, and corrective action; etc.), are critical to meeting mission needs and reducing life-cycle ownership costs. User capability needs (CDD/CPD) shall be translated into performance requirements.

Non-developmental items (NDI) or commercial off-the-shelf (COTS) items shall be shown to be operationally suitable for their intended use and capable of meeting their allocated RAM, including BIT requirements.

7.1.6 Interoperability and Integration

PMs shall ensure the interoperability and integration of all operations, functions, system interfaces, distributed decision-making, human processing capabilities, situational awareness, system definition, and design to reflect the requirements for all system elements: hardware, software, facilities, personnel, and data per references (g), (h), (i), (j), and (k).

During the Concept Refinement phase and the Technology Development phase, interoperability shall be addressed by including SoS or FoS considerations in applicable analyses. If Technology Development activity is carried out, the PM shall ensure that the technologies developed will have no adverse affect on interoperability and integration at the SoS or FoS level. During the System Development and Demonstration (SDD) phase, the PM shall ensure that interoperability is being maintained.

Reference (l) establishes Marine Corps management procedures to ensure compliance with intraoperability, interoperability, and joint interoperability standards.

7.1.6.1 IT Design Considerations

As required by reference (m), in support of references (g), (h), (i), (j), and (k), documentation of database designs is an essential element of improving interoperability.

7.1.6.2 DoD Architecture Framework/Defense Information Technology Standards Registry (DISR)

IT systems, including NSS, shall address interoperability and HSI and specify appropriate interoperability requirements. These requirements shall be consistent with DOD policies, standards (e.g., the DISR which replaces the former DoD Joint Technical Architecture (JTA)), and mission area integrated architectures and the FORCEnet integrated architecture. IT systems, including NSS, program new starts and block upgrades shall comply with the DISR. PMs shall coordinate with their respective Service requirements officers /resource sponsors and ASN(RD&A) CHSENG to ensure DISR compliance with reference (k).

Legacy JTAs are being replaced with technical standards from the DISR. The Navy Organization Unique Standards (OUS)

section of DISR contains those interoperability and net-centric standards that are not part of the DISR core standards.

7.1.6.3 FORCEnet Integrated Architectures

The materiel implementation of FORCEnet will be accomplished by developing or modifying IT systems, including NSS, that exchange information with external systems to comply with FORCEnet integrated architectures criteria. Compliance shall be verified through individual system testing and SoS or FoS interoperability validation.

A key enabler of FORCEnet is programs' compliance with the integrated architecture containing operational, system, and technical standards views. IT, including NSS, programs shall demonstrate their compliance with the FORCEnet integrated architectures when funded by the program/resource sponsor.

Program integrated architecture Technical Views (TVs) shall incorporate applicable standards from the DISR as reflected in the FORCEnet Integrated Architecture TVs. In addition, the technical standards shall incorporate industry open interface standards as appropriate. ASN(RD&A) CHSENG shall oversee development of integrated architecture System Views (SVs) and TVs through the integrated architecture governance process.

7.1.6.3.1 System of Systems (SoS) and Family of Systems (FoS) Integration and Interoperability Validation

To facilitate bringing CDD and CPD IT systems, including NSS, into compliance with integrated architecture, a testing certification/assessment process will be used to validate/assess the interoperability of selected SoS or FoS associated with mission threads developed by the operational community. Validation in this context means confirmation of interoperability through testing of actual systems supplemented as needed by high-fidelity simulation.

Interoperability validation/assessment of Navy SoS or FoS shall be aligned and coordinated with the Naval Warfare Systems Certification Policy per reference (n). Interoperability validation/assessment of Marine Corps SoS or FoS shall be conducted per the MARCORSYSCOM C4I Integration and Interoperability Management Plan (reference (o)). These processes shall take full advantage of the systems engineering integrated process teams and system performance documents prescribed in this instruction and of existing DoD, DON, and

industry SoS or FoS engineering processes and test beds as well as modeling and simulation.

7.1.6.4 Interoperability and Integration Support

ASN(RD&A) CHSENG shall support PMs in resolving interoperability and integration issues and shall advise ASN(RD&A) on all matters relating to interoperability and integration including DISR and FORCEnet compliance.

7.1.7 Survivability

When developing survivability characteristics for critical weapon systems, PMs shall address all aspects of survivability including the effects of nuclear, chemical, and biological contamination and shall consider such effects in test and resource planning. PEOs, SYSCOM Commanders, DRPMs, and PMs shall coordinate with the Joint Program Executive Office For Chemical Biological Defense (JPEO CBD), where appropriate. The ship's requirement documents shall describe what standards from reference (p) will be required.

7.1.8 Shipboard Systems Integration

Ship PMs shall develop a ship System Design Specification (SDS) that includes the performance and design requirements of enclosure (2), Annex 2-C, SDS Description, and the SDS Guidebook that will ensure integration of all embarked systems and subsystems (including aviation systems) in a manner that ensures established performance and support requirements are satisfied. Close coordination shall be established among PMs, PEOs, SYSCOM Commanders, and DRPMs to ensure successful integration of all systems.

Ship PMs shall facilitate an integrated topside design approach in both ship design and system development.

Ship PMs shall facilitate lower TOC for new and legacy ships.

7.1.9 Performance Specifications

SDSs shall include the performance and design requirements of enclosure (2), Annex 2-C, System Design Specification (SDS) Description and the SDS Guidebook for the procurement of new systems and subsystems and for the procurement of major modifications or upgrades to existing systems and subsystems and

shall be written in performance-based terms to the extent practicable. When using performance-based strategies for the acquisition or sustainment of systems, subsystems, and spares, the use of military specifications and standards shall be limited to Government-unique requirements.

The Gate 4 review of enclosure (2), paragraph 2.11.4.2.1.1, approves the SDS and authorizes a program to proceed to Gate 5 or Milestone B. The SDS may be an attachment of the SDD phase Request for Proposal (RFP).

See reference (q) for requirements for acquisition of logistics technical data in digital form.

The Director, Naval Nuclear Propulsion Program (CNO (N00N)) shall determine the specifications and standards to be used for naval nuclear propulsion plants per Public Law 98-525 (42 U.S.C., Section 7158 Note).

An order of preference for selection of specifications and standards shall be included in each contract per reference (r).

7.1.9.1 System Performance for SoS and FoS Programs

ASN(RD&A) shall establish a Systems Engineering IPT (SE IPT) for identified Navy or Marine Corps SoS or FoS. ASN(RD&A) CHSENG will assist SE IPTs established for SoS or FoS, in systems integration and interoperability performance compliance. The SE IPT shall coordinate with their respective Service requirements officers/resource sponsors and ASN(RD&A) CHSENG to assess appropriate Analysis of Alternatives (AoA) and CDDs/CPDs (per references (g) and (h)) to derive, allocate, and describe and document system performance and interfaces among the ACAT programs and modifications that provide SoS or FoS mission capability. For shipboard equipments, the SE IPT shall make use of the Naval Sea Systems Command Integrated Topside Design (ITD) and ship design process to refine system design performance for effective integration into the platform. System performance shall be documented in a SoS or FoS System Performance Document (SPD).

7.1.9.2 Standardization and Commonality

References (a) and (b) direct the application of performance based strategies that reduce logistics costs and footprint and facilitate interoperability. PMs shall establish a process to reduce the proliferation of non-standard parts and

equipment within and across system designs. Non-standard parts are those items not currently in the DoD inventory or not produced per nationally recognized industry, international, federal, or military standards. The parts management process shall ensure the identification, life-cycle cost-benefit evaluation, and formal approval of proposed non-standard parts during SDD. The process shall include the periodic evaluation of different items having similar capabilities, characteristics, and functions used in existing type, model, series, and class designs to reduce the number of distinct items.

Reference (c) designates the Navy's standard family of automatic test equipment. Reference (c) directs that acquisition of automatic test equipment, other than that designated for use at the intermediate, depot, or factory levels of maintenance, requires a waiver from ASN(RD&A).

7.1.10 Precise Time and Time Interval (PTTI) Support

The Superintendent of the U. S. Naval Observatory (USNO) is designated as the DoD and DON PTTI Manager and shall maintain standard astrogeophysical products. Coordinated Universal Time (UTC) is mandated for the time of day information exchanged among DoD systems.

7.1.11 Geospatial Information and Services (GI&S)

Guidance for identifying and funding unique GI&S products required by a system under development is found in reference (s).

All DON GI&S support requirements will be coordinated with CNO (N84)/CMC, as appropriate.

7.1.12 Natural Environmental Support

Per reference (t), CNO is responsible for coordinating and implementing operational oceanographic, maritime weather, and astrogeophysical support requirements for all DoD users. PMs shall coordinate with CNO (N84) for meteorology and oceanography, GI&S, PTTI, and astrometry support as early as possible in the development cycle to ensure timely availability of essential products and services.

7.1.13 Electromagnetic Environmental Effects (E3) and Spectrum Supportability

References (u) and (v) provide guidance for E3 management and spectrum supportability.

7.2 Human Systems Integration (HSI)

The PM shall apply HSI as part of a systems engineering approach. HSI is that aspect of systems engineering and PM's efforts that addresses the extent to which humans will be required to operate, maintain, and support the resultant design, including analysis to reduce manpower, improve human performance, improve system reliability and usability, and minimize personnel risk. HSI is the integrated analysis, design, and assessment over the life-cycle of a system and associated support infrastructure in the domains of Manpower, Personnel, Training (MPT), human factors engineering, personnel survivability, habitability, environment, safety, and occupational health.

7.2.1 HSI in Acquisition

PMs and sponsors shall address HSI throughout all phases of the acquisition process to optimize total system performance, minimize total ownership costs, and ensure that the system is built to accommodate the characteristics of the user population that will operate, maintain, and support the system. The PM shall initiate an HSI effort as early in the acquisition process as possible. When modifying a system (e.g., modernization or block upgrade), HSI issues and domains must be considered to ensure that configuration changes do not create new or unforeseen HSI issues. Life-cycle cost projections for capabilities and/or systems shall include direct HSI costs (e.g., MPT), and should discuss indirect costs (e.g., medical benefits resulting from safety and occupational health risks). PMs shall base program planning on realistic projections of future funding and manpower availability.

7.2.2 Manpower, Personnel, and Training (MPT)

MPT requirements shall be optimized for the specific system in its operational context, and shall incorporate consideration for employment with distributed, collaborative systems and for similar and/or related systems. Individual system and platform MPT requirements shall be developed in close collaboration with related systems (SoS and FoS) throughout the acquisition process to identify commonalities, distribute

decision-making, merge requirements, and avoid duplication. These requirements shall include the requisite knowledge, skills, and abilities and associated reusable training elements. MPT analyses shall be conducted as part of the overall systems engineering process, and aligned with human factors engineering (HFE) analyses. Training products and simulations developed for initial and lifetime training shall be compatible with the Navy Integrated Learning Environment as required. Training shall be kept current as modifications occur throughout a program's life-cycle. A manpower estimate report shall be developed for ACAT I programs per 10 U.S.C. Section 2434 and enclosure (6), paragraph 6.1.3. A training system plan (TSP) shall be prepared as a program plan per enclosure (3), paragraphs 3.1 and 3.9.1. The TSP shall comply with joint and coalition training requirements to ensure warfighter capability and efficiency per reference (w).

7.2.3 Human Factors Engineering (HFE)

HFE principles (e.g., top down functional analysis and human centered design) shall be applied throughout the acquisition process. The goal is to eliminate redundancy, optimize task allocation and information flow, and address required knowledge, skills, and abilities, and ensure an efficient and cost-effective process throughout the system. Analyses of new designs or design changes shall include identification and documentation of required knowledge, skills, and abilities, which serves as feedback into MPT processes.

7.2.4 Personnel Survivability

Per reference (b), PMs shall place a high priority on the personnel survivability requirements. Personnel survivability requirements strive to reduce the risk of fratricide and personnel detection or targeting, and increase the odds of personnel survival if attacked or placed in a crash, ejection or egress/escape and evasion situation.

7.2.5 Habitability

The PM shall place a high priority on the habitability requirements. The habitability standards in reference (x) shall be met for all ship programs. Where these standards cannot be achieved, a waiver shall be requested. The resource sponsor with concurrence from CNO (N4) and CNO (N1), or their designee, shall approve waivers. Waivers that affect health and safety must be evaluated via a system safety process per DOD Instruction 5000.2 and evaluated at a management level consistent with the risk.

7.3 Environmental, Safety, and Occupational Health (ESOH)

PMs for all acquisition programs shall integrate system safety risk management into their overall systems engineering and risk management processes per ASN(RD&A) memorandum of 28 June 2005 with attached USD(AT&L) memorandum of 23 September 2004. As part of the risk management processes, the PM shall eliminate ESOH hazards where possible, and shall manage ESOH hazards where they cannot be avoided. PMs shall prepare a Programmatic ESOH Evaluation (PESHE) per reference (b), enclosure 7, and this instruction, enclosure (3). The PESHE includes ESOH risks, a strategy for integrating ESOH into the systems engineering process, identification of ESOH responsibilities, the identification of ESOH hazards and associated risk; a method for tracking progress for eliminating, or mitigating the risk, including formal acceptance of the residual risk by the appropriate authority; and a schedule for NEPA/EO 12114 compliance. During system design, the PM shall document hazardous materials used in the system and plan for the system's demilitarization and disposal. The PESHE is required at program initiation for ships, Milestones B and C, and Full-Rate Production Decision Review (FRP DR) for all programs. PMs shall approve the PESHE and summarize the PESHE in the Acquisition Strategy. The PESHE shall be provided electronically to Deputy ASN(RD&A)(Acquisition and Logistics Management) (DASN(ALM)), the Assistant Secretary of the Navy (Installations and Environment) (ASN(I&E)), a PM's supporting SYSCOM, CNO (N09F and N45) for Navy programs, and CMC (MARCORSYSCOM) for Marine Corps programs for information. PMs shall integrate the ESOH risk management strategy into their program's Systems Engineering Plan. PMs shall present the program's ESOH posture/status at Program Decision Meetings (PDMs). CNO (N09F) will assist CNO (N1) in the HSI areas of safety and occupational health.

ASN(RD&A) is responsible for ensuring DON Science and Technology (S&T) projects and acquisition programs comply with DON ESOH policy and is the focal point for all DON S&T and acquisition ESOH issues.

ASN(I&E) is responsible for formulating DON ESOH policy (reference (y)). ASN(I&E), or designee, as a program decision principal advisor (see reference (z)), will attend PDMs.

CNO and CMC shall support ASN(RD&A) in developing acquisition ESOH requirements, recommending mandatory acquisition ESOH policy, assisting in ESOH policy implementation, reviewing

ESOH related documentation, and providing ESOH advice and assistance to acquisition personnel.

The Chief of the Bureau of Medicine (BUMED) shall support ASN(RD&A) in integrating occupational health considerations into S&T projects and the systems engineering process of acquisition programs.

The Chief of Naval Research (CNR) and PMs shall ensure ESOH risk levels have been identified in S&T projects and acquisition programs, respectively, per the risk management processes of reference (aa). Program goals shall incorporate ESOH criteria where regulatory factors may impinge on basing, range use, and deployment options or affect operators' health and safety.

PMs shall use the government and industry standard practice for system safety, Military Standard (MIL-STD) 882, reference (aa), in all developmental and sustaining engineering activities.

ASN(RD&A) is the risk acceptance authority for high ESOH risks. PEOs/SYSCOM Commanders, or Flag-level or Senior Executive Service (SES) designees, DRPMs, and CNR are the risk acceptance authorities for serious ESOH risks. PMs are the risk acceptance authorities for medium/low ESOH risks. The user representative must be part of this process throughout the life-cycle and must provide formal concurrence prior to all Serious- and High-risk acceptance decisions, per USD AT&L memorandum of 7 March 2007. High, serious, and medium/low ESOH risks are defined in Tables A-I to A-IV in MIL-STD-882.

7.3.1 ESOH Compliance

PMs shall comply with ESOH statutory and regulatory requirements, including references (ab) (32 CFR 775), (ac) (32 CFR 187), (ad) (for Navy), and (ae) (for Marine Corps). The impact of ESOH requirements on a program's life-cycle cost, schedule, and performance and the ESOH impact of a program's system on the user and the operating environment shall be identified to the MDA.

7.3.2 National Environmental Policy Act (NEPA) and Executive Order (EO) 12114 Environmental Effects Abroad

Per NEPA/E0 12114, PMs shall assess the potential environmental impacts of specific program activities (referred to as proposed actions). Potential impacts shall be analyzed prior to actual implementation of an activity. PMs shall support NEPA/EO 12114 action proponents. The action proponent for each proposed action shall prepare the formal NEPA/EO 12114 documentation, establish the initiation date for each action, establish the type of NEPA/EO 12114 documentation prior to the proposed action start date, establish the start and completion dates for the final NEPA/EO12114 documentation and identify the specific approval authority (see CNO (N45) memorandum of 23 September 2004 for Navy guidance). Final approval authority for acquisition program-related NEPA and EO 12114 documents is shown in Tables E7T1 and E7T2.

CNR shall provide final approval authority for S&T project-related NEPA environmental assessments (EAs) and EO 12114 overseas EAs. The PEO/SYSCOM Commander/DRPM or CNR, as applicable, shall provide final approval authority for assigned non-acquisition program-related NEPA EAs and EO 12114 overseas EAs. Approval of records of decisions (RODs) under NEPA is at the ASN-level and may not be delegated. The environmental documentation process tables for NEPA and EO 12114 in this paragraph shall be followed by all acquisition programs where a PESHE or other evaluation determines there is a need for NEPA or EO 12114 documentation. Prior to CNO (N45) endorsement, the PEOs/SYSCOMs/DRPMs for assigned programs, shall review NEPA/EO 12114 documentation as a part of the NEPA/EO 12114 process.

Reference (af) provides DON policy for selecting sites per NEPA and EO 12114. Per CNO memorandum of 6 March 2006, the Mid-Frequency Active Sonar Effects Analysis Interim Policy applies to all Navy Action Proponents preparing environmental planning documentation either under this instruction or subject to CNO endorsement. PMs shall ensure test activity documents utilize the quantitative methodology contained in the Interim Policy for assessing the potential effects of mid-frequency active sonar use on marine mammals incident to applicable Navy military readiness and scientific research activities. See reference (b), enclosure 7, for implementation requirements for all DON programs.

Table E7T1 ENVIRONMENTAL DOCUMENTATION PROCESS--NEPA

DOCUMENT	PREPARED BY ACTION PROPONENT	REVIEW	ENDORSEMENT	APPROVAL/ SIGNATURE
Categorical Exclusion (CATEX)	PM, CNR, COTF/Dir, MCOTEA, or designee[8]	PEO/SYSCOM/DRPM CNO (N00N)[1] Host Installation CO[2] ASN(I&E)[9], Info Copy		PM, CNR, COTF/Dir, MCOTEA, or designee, Sign
Environmental Assessment (EA)	PM, CNR, COTF/Dir, MCOTEA, or designee[8]	PEO/SYSCOM/DRPM CNO (N00N)[1] Host Installation CO[2] Counsel ASN(I&E)[9], Info Copy	CNO/CMC[3, 9]	PEO/SYSCOM COMMANDER/ DRPM, CNR, or COTF/Dir, MCOTEA, Approve[4]
Finding of No Significant Impact (FONSI)	PM, CNR, COTF/Dir, MCOTEA, or designee[8]	PEO/SYSCOM/DRPM CNO (N00N)[1] Host Installation CO[2] Counsel ASN(I&E)[9], Info Copy	CNO/CMC[3, 9]	PEO/SYSCOM COMMANDER/ DRPM, CNR, COTF/Dir, MCOTEA, Sign[4, 5]
Environmental Impact Statement (EIS) (NOI/DEIS/FEIS)	PM, CNR, COTF/Dir MCOTEA, or designee[8]	PEO/SYSCOM/DRPM CNO (N00N)[1] Host Installation CO[2] Counsel[9]	CNO/CMC ASN(I&E)[9]	ASN(RD&A), Approve[4]
Record of Decision (ROD)	PM or CNO/CMC[8]	PEO/SYSCOM/DRPM CNO (N00N)[1] Host Installation CO[2] Counsel[9]	CNO/CMC ASN(I&E)[9]	ASN(RD&A), Sign[4, 5]

(See footnotes for the NEPA table below the EO 12114 table on the next page.)

PM - Program Manager
PEO - Program Executive Officer
SYSCOM - Systems Command
DRPM - Direct Reporting Program Manager
CNR - Chief of Naval Research
COTF - Commander, Operational Test and Evaluation Force
Director, MCOTEA - Director, Marine Corps Operational Test and Evaluation Activity
CO - Commanding Officer
NOI - Notice of Intent
DEIS - Draft Environmental Impact Statement
FEIS - Final Environmental Impact Statement
CFFC - Commander Fleet Forces Command
CPF - Commander Pacific Fleet

Table E7T2 ENVIRONMENTAL DOCUMENTATION PROCESS -- EXECUTIVE ORDER 12114, ENVIRONMENTAL EFFECTS ABROAD

DOCUMENT	PREPARED BY ACTION PROPONENT	REVIEW	ENDORSEMENT	APPROVAL/ SIGNATURE
E. O. 12114 Negative Decision (Citing a previously approved OEA, OEIS, ER, or ES; an Overseas CATEX; or exemption)	PM, CNR, COTF/Dir, MCOTEA, or designee[8]	PEO/SYSCOM/DRPM CNO (N00N)[1] Host Installation CO[2] Counsel ASN(I&E)[9], Info Copy		PM, CNR, COTF/Dir, MCOTEA, or designee, Sign
Overseas Environmental Assessment (OEA)[6]	PM, CNR, COTF/Dir, MCOTEA, or designee[8]	PEO/SYSCOM/DRPM CNO (N00N)[1] Host Installation CO[2] Counsel ASN(I&E)[9], Info Copy	CNO/CMC[3, 9]	PEO/SYSCOM COMMANDER/ DRPM, CNR, or COTF/Dir, MCOTEA, Approve[4]
Overseas EIS (OEIS)	PM, CNR, COTF/Dir, MCOTEA, or designee[8]	PEO/SYSCOM/DRPM CNO (N00N)[1] Host Installation CO[2] Counsel[9]	CNO/CMC ASN(I&E)[7, 9]	ASN(RD&A), Approve[4]
Environmental Review (ER)/ Environmental Study (ES)	PM, CNR, COTF/Dir, MCOTEA, or designee[8]	PEO/SYSCOM/DRPM CNO (N00N)[1] Host Installation CO[2] Counsel[9]	CNO/CMC ASN(I&E)[7, 9]	ASN(RD&A), Approve[4]
ER or ES Concluding No Significant Impact	PM, CNR, COTF/Dir, MCOTEA, or designee[8]	PEO/SYSCOM/DRPM CNO (N00N)[1] Host Installation CO[2] Counsel ASN(I&E)[9], Info Copy	CNO/CMC[3, 9]	PEO/SYSCOM COMMANDER/ DRPM, CNR, COTF/Dir, MCOTEA, or designee Approve[4]

FOOTNOTES

1. Obtain concurrence from CNO (N00N) for acquisition programs involving nuclear propulsion matters.
2. The host installation CO (e.g., test facility CO) where the EA is occurring.
3. CNO/CMC may delegate endorsement when a PEO/SYSCOM/DRPM has a clear knowledge of the requirements as demonstrated by the preparation of acceptable EAs and FONSIs (or corresponding EO 12114 documents).
4. Approval/signature authority may only be redelegated when MDA has been redelegated below PEO/SYSCOM Commander/DRPM.
5. The PM is responsible for ensuring public notification of FONSIs and RODs via appropriate medium. Where publication in the *Federal Register* is required, CNO/CMC will publish FONSIs and RODs.
6. The last page of the Overseas EA concludes with a statement that either (1) no significant harm will occur to the environment outside of the United States, or (2) significant harm may occur to the environment outside of the United States and an Overseas EIS must be prepared.
7. ASN(I&E) will coordinate with Department of State on actions (either unilateral or multilateral) affecting a foreign nation.
8. CFFC/CPF will act as the action proponent for homebasing/porting actions.
9. CFFC/CPF, as the Area Environmental Coordinator, will coordinate with appropriate Regional Environmental Coordinator(s) and COMFLTFORCOM for all environmental planning and compliance for actions taking place at sea (from the high water mark seaward).

7.3.3 Safety and Health

CNO shall establish ESOH Advisory Boards to support the Fleet and advise the PEOs, SYSCOM Commanders, DRPMs, and PMs in areas where risks are identified and that actions are taken to either mitigate or to knowingly accept the risks. All ship installations for new or modified weapons or weapon systems shall be formally reviewed and safety approval received during the SDD phase. ESOH risks shall be identified and managed using a system safety process that is integrated into the systems engineering process per references (y) and (aa).

7.3.4 Hazardous Materials Management

PMs shall use proven hazardous materials management procedures and processes in reference (ag) to develop and implement their hazardous material management program. The PM shall identify hazardous materials used in the system and required during operations, sustainment, and disposal.

7.3.5 Pollution Prevention

PMs shall review their programs to ensure they are in compliance with relevant pollution control regulations, such as Marine Pollution Protocol, and they are capable of operating freely per international conventions and federal regulations.

PMs shall comply with the DoD Green Procurement Program (GPP) to the maximum extent practicable (see DASN (Acquisition (ACQ)) memorandum, "Department of Defense (DoD) Green Procurement Program (GPP)," 22 November 2004 and USD(AT&L) memorandum, "Establishment of the DoD Green Procurement Program (GPP)," of 27 August 2004 with attachment 1 (GPP Strategy) and attachment 2 (DoD GPP Metrics)). The purpose of the GPP is to enhance and sustain mission readiness through cost effective acquisition that achieves compliance and reduces resource consumption and solid and hazardous waste generation. To that end, PMs shall establish a pollution prevention (P2) process to help minimize environmental impacts and the life-cycle cost associated with environmental compliance. The P2 process shall support operational readiness by achieving cost-effective, full, sustained compliance and enhanced personnel safety through innovative and reasonable use of P2 technologies. The P2 hierarchy of source reduction, reuse and recycling, treatment, followed by environmentally safe disposal through all phases of the life-cycle shall be analyzed.

7.3.6 Explosives Safety

All acquisition programs that include or support munitions, explosives, or energetics shall comply with DoD and DON explosives safety requirements including the requirements of reference (ah). The DON risk acceptance authorities of enclosure (7), paragraph 7.3, of this instruction, shall accept all risks involving explosives safety for ships or systems under design or construction. The DON risk acceptance authorities shall consult with the SYSCOM technical authority managing explosives, ordnance, weapons, or combat system safety prior to accepting any explosives safety or ordnance safety risks. Where differences of opinion remain between the risk acceptance authority and the SYSCOM technical authority concerning the acceptability of any explosives safety or ordnance risks, such differences shall be forwarded to ASN(RD&A) for adjudication.

7.3.7 Aviation Critical Safety Items (CSIs)

References (d), (e), and (ai) establish requirements for the identification, cataloging, procurement, management, and disposal of aviation CSIs. PMs of aviation or ship-air integration systems shall ensure that aviation CSIs, are properly identified prior to provisioning. For new system designs, major modifications, or upgrades, PMs shall ensure that prime contractors/Original Equipment Manufacturers (OEMs) identify recommended aviation CSIs, rationale, recommended sources, and CSI management approaches. PMs shall ensure timely Government technical evaluation of the contractor CSI recommendations and management approaches as well as the identification of aviation CSIs not identified by the prime contractors/OEMs. Technical documentation used for reprocurement of CSIs shall identify critical characteristics or inspection requirements and serialization, marking, or unique identification requirements. A listing of qualified manufacturing, repair, overhaul, or maintenance sources for the CSIs shall be provided to the logistics management organization prior to provisioning. PMs of aviation or ship-air integration programs shall ensure timely responses to requests to evaluate item criticality, assess alternative CSI sources of supply, or evaluate changes to or variations from established CSI design, manufacturing, installation, overhaul, modification, or repair practices.

Chapter 8
Acquisition of Services

References: (a) 10 U.S.C. Section 2330
(b) USD(AT&L) Memorandum, Acquisition of Services Policy, of 2 Oct 06
(c) DOD Directive 5000.1, The Defense Acquisition System, of 12 May 03
(d) DOD Instruction 5000.2, Operation of the Defense Acquisition System, of 12 May 03

8.1 Introduction

Services should be acquired as strategically and efficiently as practicable. Reference (a) required the Secretary of Defense to establish a management structure for the acquisition of services that is comparable to the process for the acquisition of hardware.

The Under Secretary of Defense for Acquisition, Technology and Logistics (USD(AT&L)) guidance per reference (b) clarifies that service acquisition is broader than contracting for services. It includes execution of one or multiple contracts, orders or other instruments for committing or obligating funds to acquire services that meet a specified requirement. The process described in the following paragraphs contains tiered approval levels based on the total estimated dollar value of the service acquisition.

In addition, reference (a) establishes specific acquisition management responsibilities for the decision authority.

8.2 Applicability

The acquisition of services process applies to services that are **not** included in, or managed and reviewed as part of, major and non-Major Defense Acquisition Programs (MDAPs) and major and non-major Information Technology (IT) acquisition programs.

8.3 Definitions

Decision Authority – the official with services review and approval responsibility as defined in Table E8T1.

Service – engagement of the time and effort of a contractor whose primary purpose is to perform an identifiable task, or tasks, rather than to furnish an end item of supply.

Acquisition of Services – the execution of one or multiple contracts or other instruments committing or obligating funds (e.g., funds transfer, placing orders under existing contracts) for a specified requirement. Acquisition begins at the point when agency needs are established and includes all functions directly related to the process of fulfilling agency needs by contract, agreements, or funds transfer.

IT Services – the performance of any work related to IT and the operation of IT, including National Security Systems (NSS). This includes outsourced IT-based business processes, outsourced IT, and outsourced information functions.

Procurement Action – with respect to the acquisition of services, a procurement action includes the following:

1. Entry into a contract or any other form of agreement including, but not limited to, basic ordering agreements, blanket purchase agreements, indefinite quantity/indefinite delivery contracts and similar ordering agreements.

2. Issuance of a task order or any transfer of funds to acquire a service on behalf of the Department of Defense (DoD).

Total Estimated Dollar Value – the total estimated dollar value of an acquisition based on the value of the total planned requirement, including options, contingencies, fund transfers, provisioning, etc.

8.4 Responsibility

Oversight of service acquisitions within the Department of the Navy (DON) is the shared responsibility of requiring activities, contracting activities, and the Assistant Secretary of the Navy (Research, Development and Acquisition) (ASN(RD&A)). The management and oversight process for acquisition of services is based on existing DON acquisition oversight structure with review and approval levels based on total estimated dollar value.

Requiring activities, in conjunction with supporting contracting activities, shall prepare an acquisition strategy containing the information required by Attachment 1 of reference (b) for the decision authority’s review. Acquisition strategies

shall be updated and submitted to the decision authority for review when significant changes occur. Contracting activities shall ensure the Federal socio-economic programs are given proper consideration.

8.5 Review and Approval Thresholds

USD(AT&L) will review and approve non-IT service acquisitions identified by USD(AT&L) as Special Interest, regardless of the purpose or total estimated dollar value. Proposed acquisitions of non-IT services with a total estimated dollar value greater than 1 billion dollars (base year and options) shall be referred to USD(AT&L) using the procedure in Attachment 2 of reference (b) for formal review at USD(AT&L)'s discretion. Acquisition strategies for those non-IT service acquisitions to be approved by USD(AT&L) shall be submitted via ASN(RD&A).

The Assistant Secretary of Defense for Networks and Information Integration (ASD(NII))/DoD Chief Information Officer (DoD CIO) will review and approve IT service acquisitions per Table E8T1 and any IT service acquisition identified by ASD(NII) as Special Interest. Proposed acquisitions of IT services with a total estimated dollar value greater than 500 million dollars (base year and options) shall be referred to ASD(NII)/DoD CIO using the procedure in Attachment 2 of reference (b) for formal review at ASD(NII)/DoD CIO's discretion. ASD(NII)/DoD CIO will notify USD(AT&L) of any proposed acquisition of IT services with a total estimated dollar value greater than 1 billion dollars (base year(s) and options) per paragraph 4.2.5. of reference (b).

ASN(RD&A) will review service acquisitions designated as Special Interest by USD(AT&L) and ASD(NII)/DoD CIO and will review and approve non-IT service acquisitions with a total estimated dollar value of $250 million or more, IT service acquisitions with a total estimated dollar value of $250 million or more but less than $500 million, and service acquisitions identified by ASN(RD&A) as Special Interest. The Deputy Assistant Secretary of the Navy (Acquisition and Logistics Management (DASN(ALM))) will review service acquisitions requiring USD(AT&L), ASD(NII)/DoD CIO, or ASN(RD&A) approval.

The Deputy Assistant Secretary of the Navy (Command, Control, Communications, Computers, and Intelligence and Space) (DASN(C4I and Space)) will review IT service acquisitions requiring ASD(NII)/DoD CIO and ASN(RD&A) approval. Acquisition strategies for IT service acquisitions with a total estimated dollar value of $250 million or more or designated ASD(NII)/DoD

CIO or ASN(RD&A) Special Interest service acquisitions shall be forwarded for ASN(RD&A) review via DASN(ALM).

Program Executive Officers (PEOs), Direct Reporting Program Managers (DRPMs) and/or Heads of the Contracting Activity (HCAs) will review service acquisitions under their cognizance requiring USD(AT&L), ASD(NII)/DoD CIO, or ASN(RD&A) approval and will review and approve service acquisitions with total estimated dollar value below $250 million.

For service acquisitions identified by activities outside of the acquisition commands, the HCA normally providing contract support to the requiring activity will review and approve service acquisitions with a total estimated dollar value below $250 million.

Approval authority for service acquisitions below $250 million is delegable, but, for acquisitions with a total estimated dollar value over $100 million, is limited to Flag or General Officers, members of the Senior Executive Service (SES), or Commanding Officers.

Thresholds are summarized in Table E8T1 on the next page.

Table E8T1 Review and Approval Thresholds				
Acquisition of Non-IT Services				
Category	**Total Estimated Dollar Value**	**Requirements Review**	**Acquisition Strategy Review**	**Decision Authority**
Special Interest	As designated by USD(AT&L) or other senior official	Budget Submitting Office	ASN(RD&A) DASN(ALM)	USD(AT&L) or senior officials via ASN(RD&A)
Special Interest	As designated by ASN(RD&A)	Budget Submitting Office	DASN(ALM)	ASN(RD&A)
Cat I	≥ $250 million (see Note 1)	Budget Submitting Office	DASN(ALM) HCA	ASN(RD&A)
Cat II	≥ $10 million < $250 million	Requiring Activity	HCA	PEO, DRPM or HCA
Cat III	> the simplified acquisition threshold < $10 million	Requiring Activity	TBD by Decision Authority	PEO, DRPM or HCA
Acquisition of IT Services				
Special Interest	As designated by ASD(NII)/DoD CIO	DASN (C4I & Space)	ASN(RD&A) DASN (C4I & Space) via DASN(ALM)	ASD(NII)/DoD CIO via ASN(RD&A)
Special Interest	As designated by ASN(RD&A)	DASN (C4I & Space)	DASN (C4I & Space) via DASN(ALM)	ASN(RD&A)
Cat IA	≥ $500 million (see Note 2)	DASN (C4I & Space)	DASN (C4I & Space) via DASN(ALM) HCA	ASD(NII)/DoD CIO or as designated via ASN(RD&A)
Cat IB	≥ $250 million < $500 million	DASN (C4I & Space)	DASN (C4I & Space) via DASN(ALM) HCA	ASN(RD&A)
Cat IIA	≥ $10 million < $250 million	Requiring Activity	HCA	PEO, DRPM or HCA
Cat IIIA	> the simplified acquisition threshold < $10 million	Requiring Activity	TBD by Decision Authority	PEO, DRPM or HCA

NOTES:

1. Proposed acquisitions of non-IT services with a total estimated dollar value greater than 1 billion dollars (base year and options) shall be referred to USD(AT&L) using the procedure in Attachment 2 of reference (b) and formally reviewed at USD(AT&L)'s discretion.

2. Proposed acquisitions of IT services with a total estimated dollar value greater than 500 million dollars (base year and options) shall be referred to ASD(NII)/DoD CIO using the procedure in Attachment 2 of reference (b) and formally reviewed at ASD(NII)/DoD CIO's discretion. ASD(NII)/DoD CIO will notify USD(AT&L) of any proposed acquisition of IT services with a total

estimated dollar value greater than 1 billion dollars (base year(s) and options) per paragraph 4.2.5. of reference (b).

3. Dollar amounts are in Fiscal Year 2006 constant year dollars.

4. Acquisition of services that are part of a weapon system acquisition program or Automated Information System (AIS) acquisition program managed per references (c) and (d) shall be reviewed and approved as part of that program's management process.

5. For acquisition of IT services with a total estimated value below $500 million (base year and options), ASN(RD&A) and DON CIO shall establish procedures that ensure the acquisition strategy and related planning address the relevant aspects of 40 U.S.C. Section 11101 et seq. (Clinger-Cohen Act (CCA)) before the final solicitation is issued or, for other than full and open competition, before negotiations commence.

6. If a proposed acquisition includes both hardware and services, and the estimated dollar value of the services portion exceeds the values specified in Note 1 or Note 2, it may be reviewed by USD(AT&L) or ASD(NII)/DoD CIO unless the exception under paragraph 2.4 of reference (b) applies.

7. Related task orders within an ordering vehicle shall be viewed as one effort for the purpose of determining the appropriate thresholds.

8.6 Review Procedures

An acquisition strategy for service acquisitions meeting the review thresholds in Table E8T1 shall be forwarded for review and approval prior to initiating any action to commit the Government to such strategy. Acquisition strategies requiring USD(AT&L) or ASN(RD&A) review and approval shall be submitted via DASN(ALM). IT service acquisition strategies for ASD(NII)/DoD CIO or ASN(RD&A) approval will be submitted via DASN(C4I and Space) and DASN(ALM).

For acquisition strategies requiring USD(AT&L) or ASD(NII)/DoD CIO review, USD(AT&L) or ASD(NII)/DoD CIO will provide ASN(RD&A) a determination, within 10 working days of receipt of the acquisition strategy, whether a review of the acquisition strategy will be conducted. If a review is conducted, it will be completed within 30 working days of the

determination. If the determination to conduct a review is not made within 10 working days of receipt, the acquisition may proceed.

PEOs/DRPMs/HCAs shall establish review procedures commensurate with the review process above.

8.7 Outcomes

This review process shall ensure, to the extent practicable, acquisition of services within DON support and enhance warfighting capabilities; use a strategic enterprise-wide approach; are based on clear, performance-based requirements and business arrangements that are in the best interest of DoD/DON; produce outcomes that are identified, measurable, and consistent with customer needs; and are in compliance with applicable statutes, regulations, policies, and other requirements.

8.8 Metrics

The preferred acquisition approach is performance based. The acquisition strategy should include cost, schedule, and performance metrics that measure service acquisition outcomes against requirements. Decision authorities will approve metrics for service acquisitions as part of their review and approval of the acquisition strategy. If metrics are not submitted with the acquisition strategy, the metrics must be submitted for decision authority approval prior to execution of any business instrument that initiates the acquisition. The timelines for USD(AT&L) or ASD(NII) metric review are identical to those for review of an acquisition strategy.

8.9 Data Collection

Acquisition strategies may be based on obligations and commitments under contracts as well as obligations and commitments made outside of contracts.

The Federal Procurement Data System-Next Generation (FPDS-NG) reports information required by Attachment 3 of reference (b) for DoD contract actions. The Federal Procurement Data System provides requisite report information for purchases accomplished by non-DoD contracting agencies to satisfy DoD requirements.

Requiring activities shall provide annual reports identifying Government contract actions under each acquisition strategy and addressing the report information required by Attachment 3 of reference (b) for parts of the acquisition

strategy not accomplished through government contract. Reports shall be submitted in electronic spreadsheet format to DASN(ALM) for non-IT services or DASN(C4I and Space) for IT services.

8.10 Execution Reviews

Program progress toward meeting approved metrics shall be continuously monitored within the requiring activity. Program progress reports shall be submitted to the decision authority annually unless the decision authority has identified an alternate reporting schedule. More frequent progress reports shall be submitted in cases where demonstrated program progress is unsatisfactory.

8.11 Decision Authority Acquisition Management Responsibilities

Use of a contract or task order above the simplified acquisition threshold that is not performance-based, regardless of whether the services are procured through a DON contract or through a contract entered into by an official outside of DON, requires decision authority approval in advance of contract placement per the Navy-Marine Corps Acquisition Regulation Supplement Subpart 5237.1.

Use of contracts or task orders for the acquisition of services to be awarded by a department or agency outside DON requires approval from the decision authority. Decision authorities are responsible for maintaining records of service acquisitions forwarded for procurement outside DON. Such records should include the information required by Attachment 3 of reference (b) or, at a minimum, the type(s) of services required; total estimated dollar value; the procuring activity; type of contract; contract number; and, total contract value.

Chapter 9
Program Management

References: (a) SECNAVINST 5400.15C
(b) DOD Directive 5000.1, The Defense Acquisition System, of 12 May 03
(c) SECNAVINST 5200.35E
(d) SECNAVINST 5710.25B
(e) DOD Instruction 5000.2, Operation of the Defense Acquisition System, of 12 May 03

9.1 Assignment of Program Executive Responsibilities

Program Executive Officers (PEOs), Systems Command (SYSCOM) Commanders, and Direct Reporting Program Managers (DRPMs) are accountable for the specific responsibilities listed in reference (a), including administration of assigned acquisition programs, and reporting directly to the Component Acquisition Executive (CAE) for such programs. PEOs, SYSCOM Commanders, DRPMs, and PMs have authority, responsibility, and accountability for life-cycle management of all acquisition programs within their cognizance. PEOs, SYSCOM Commanders, and DRPMs shall implement appropriate management controls as required by reference (b), and per reference (c), to ensure the policies contained in this instruction are implemented to the maximum extent practical. SYSCOM Commanders shall also provide support, as applicable, to PEOs, DRPMs, and PMs. PEOs, SYSCOM Commanders, and DRPMs are authorized to approve charters for assigned PMs. When an official exercises Milestone Decision Authority (MDA) or direction on program matters, the decision or direction shall be documented with a copy forwarded to the Assistant Secretary of the Navy (Research, Development and Acquisition) (ASN(RD&A)), the cognizant PEO, the PM, and the Chief of Naval Operations (CNO)/Commandant of the Marine Corps (CMC). The official shall be held responsible and accountable for the decision or programmatic direction.

9.2 International Cooperative Program Management

International cooperative programs require a legally binding agreement between the respective defense establishments of the United States and foreign governments. These agreements will be developed, negotiated, and staffed by the Office of

ASN(RD&A) Deputy Assistant Secretary of the Navy (International Programs) (DASN(IP))/Navy International Programs Office (NIPO) with assistance and participation by cognizant PMs and/or PEOs.

Procedures for acquisition-related international agreements are contained in reference (d). PMs should coordinate with DASN(IP)/NIPO for additional information on procedures and requirements.

9.3 Joint Program Management

When Department of the Navy (DON) activities are considering involvement in another Service's program that is past program initiation, but pre-Full-Rate Production Decision Review (FRP DR), and there has been no formal previous involvement, DON activities shall establish an operating agreement with the lead Service defining participation in the program.

When a DON activity is considering involvement in another Service's program that is past FRP DR, and when there has been no previous formal involvement, the decision to forward funds to the lead Service will be supported by formal decision.

When ASN(RD&A) approves withdrawal from a program, CNO (N8)/CMC (Deputy Commandant, Combat Development and Integration (DC,CD&I)) will prepare the necessary briefing material and correspondence that supports ASN(RD&A)'s withdrawal decision. See reference (e), enclosure 9, paragraph E9.5, for implementation requirements for all DON Acquisition Category (ACAT) programs.