OPNAV M-8000.16 Volume I
30 April 2012

THE NAVAL ORDNANCE MANAGEMENT POLICY (NOMP)

VOLUME I

ORDNANCE CONCEPTS, OBJECTIVES, POLICIES, ORGANIZATIONS, AND RESPONSIBILITIES

DEPARTMENT OF THE NAVY
OFFICE OF THE CHIEF OF NAVAL OPERATIONS
WASHINGTON D.C.

DEPARTMENT OF THE NAVY
OFFICE OF THE CHIEF OF NAVAL OPERATIONS
2000 NAVY PENTAGON
WASHINGTON, DC 20350-2000

OPNAVINST 8000.16D
N4
24 May 2012

OPNAV INSTRUCTION 8000.16D

From: Chief of Naval Operations

Subj: NAVAL ORDNANCE MANAGEMENT POLICY MANUAL

Ref: (a) OPNAV M-8000.16, Naval Ordnance Management Policy Manual

1. Purpose. To issue naval ordnance management policies, assign responsibilities, and provide guidance for the proper execution of naval ordnance management policy (NOMP) at all levels of naval ordnance management. This instruction *is* a complete revision and should be reviewed in its entirety.

2. Cancellation. OPNAVINST 8000.16C and OPNAVINST 4850.1C.

3. Implementations. Reference (a} provides the NOMP Manual as implementation guidance. The following instructions are referenced in the NOMP Manual, but remain as separate instructions:

a. OPNAVINST 8010.12G/MCO 8010.12A, Naval Conventional Ordnance Operational Logistics Policy

b. OPNAVINST 8015.2B, Conventional Ordnance Inventory Accountability

c. OPNAVINST 8020.15A/MCO 8020.13A, Explosive Safety Review, Oversight, and Verification of Response Action involving Military Munitions

d. OPNAVINST 8026.2B, Navy Munitions Disposition Policy

4. Background. The NOMP *is* designed to achieve operational readiness and life cycle management of ammunitions and explosives, as established by Chief of Naval Operations (CNO) with optimum use of manpower, facilities, material, and funds. This is to be accomplished through policy guidance, technical

direction, management, and administration of all programs affecting activities responsible for naval ordnance, including aircraft armament equipment and armament weapons support equipment. The NOMP objective encompasses the maintenance, manufacture, testing, and assessment of all naval ordnance, which will ensure optimum use of resources and the application of a systematic planned maintenance program. It also includes the collection, analysis, and use of pertinent data to effectively improve material readiness, reliability, and safety while simultaneously increasing the efficient and economical management of human, monetary, and material resources.

5. Policies

a. The CNO is responsible for the achievement of maximum operational readiness of naval systems, including naval ordnance and associated equipment.

b. Ordnance management and technical responsibility contained in this instruction and reference (a) will be applied in conjunction with technical documents developed and issued by Commander, Naval Air Systems Command (NAVAIRSYSCOM); Commander, Naval Sea Systems Command {NAVSEASYSCOM); Naval Supply Systems Command {NAVSUPSYSCOM); and Naval Ordnance Safety and Security Activity {NOSSA).

c. Activities having physical or accountable custody of naval ordnance are responsible for the proper inventory accuracy and material condition to support any operational tasking.

d. All echelons of command are directed to develop and issue necessary amplifying guidance and instructions to ensure that personnel, materials, training programs, and facilities assigned to support naval ordnance management are in accordance with their assigned responsibilities.

e. Maintenance tasks will be assigned by specific levels deemed necessary to support missions assigned by the Secretary of the Navy {SECNAV), CNO, and the Commandant of the Marine Corps {CMC). The CNO assigns tasks to the naval components of the operating forces; NAVAIRSYSCOM; NAVSEASYSCOM; Commander, Naval Air Reserve Force through Commander, Naval Reserve Force {NAVRESFOR); and the Chief of Naval Air Training through the Naval Education and Training Command. NAVAIRSYSCOM and

NAVSEASYSCOM develop and identify the ordnance functions which must be performed in order to carry out assigned ordnance tasks or responsibilities.

(1) The maintenance responsibilities of each echelon of command are defined herein. When temporarily required by operational or combat necessity, any appropriate operational authority may authorize, or require, the performance of any maintenance function or task, which is within the capability of the personnel, materials, and facilities available.

(2) All workload tasked to a station by NAVAIRSYSCOM and NAVSEASYSCOM will be coordinated with and approved by the parent command of that station.

f. Authority to deviate from the policies, procedures, and responsibilities issued by this instruction will be requested to Office of the Chief of Naval Operations (OPNAV) Ordnance Programs and Policy Branch (N411), via the chain of command, with copies to Commander, Naval Air Warfare Center Weapons Division, China Lake (NAVAIRWARCENWPNDIV) (Code 6712000).

6. Scope. The NOMP encompasses all Navy and Marine Corps activities (with the exception of U.S. Marine Corps activities responsible for OT cognizant ammunition) concerned with the use, maintenance, overhaul, production, accountability, and support of naval ordnance and associated equipment. In addition to specifying naval ordnance management and policies, the NOMP addresses interactive programs including maintenance processes, maintenance management, maintenance engineering, fleet support, inventory management, asset and fiscal resources, and associated reporting and automated data processing systems. This instruction outlines command, administrative, and management relationships, and establishes policies for the assignment of maintenance tasks and responsibilities for the conduct of the NOMP. It is the basic document and authority governing the management of naval ordnance. All directives in conflict with the provisions of this instruction shall be revised to ensure conformity.

7. Responsibilities

a. The NOMP is sponsored and directed by Deputy Chief of Naval Operations, Fleet Readiness and Logistics (CNO (N4)). It

is administered through the chain of command, and provided material and technical support by NAVAIRSYSCOM, NAVSEASYSCOM, and NAVSUPSYSCOM.

b. NOMP committees are comprised of:

(1) Policy Committee

(a) The NOMP Policy Committee will monitor the continued development and refinement of the NOMP under the sponsorship of OPNAV (N411).

(b) OPNAV (N411) branch head will chair the NOMP Policy Committee.

(c) CMC Aviation Supply and Logistics (ASL) 30; Ordnance Maintenance Policy and Resources (OPNAV N411E); Commander, U.S. Fleet Forces Command; Commander, U.S. Pacific Fleet; Commander, NAVAIRSYSCOM; Commander, Naval Air Forces (COMNAVAIRFOR), Atlantic; COMNAVAIRFOR, Pacific; Commander, Marine Forces Command; Commander, Marine Forces, Pacific; Commander, Naval Reserve Forces; Commanding General, 4th Marine Aircraft Wing; Commander, Naval Surface Forces Atlantic; Commander, Naval Surface Forces Pacific; Commander, Submarine Forces; Commander, NAVSEASYSCOM; Commander, Naval Supply Global Logistics Support Ammunition; NOSSA; and Naval Munitions Command shall each provide one representative to serve on this committee.

(d) The primary function of the NOMP Policy Committee is to recommend to CNO the policy and procedures required for the continued development, refinement, and use of the NOMP in the operating forces and the shore establishment of the Navy and the Marine Corps.

(e) The NOMP Policy Committee normally meets annually, or as directed, by the chairperson.

(2) Working Committee

(a) A NOMP Working Committee has been established under the sponsorship of OPNAV (N411).

(b) OPNAV (N411) will chair the NOMP Working Committee.

(c) CMC ASL 30; OPNAV (N411); Commander, U.S. Fleet Forces Command; Commander, NAVAIRSYSCOM; Naval Surface Warfare Center; COMNAVAIRFOR, Atlantic; COMNAVAIRFOR, Pacific; Commander, Marine Forces Command; Commander, NAVRESFOR; Commanding General, 4th Marine Aircraft Wing; Commander, Naval Surface Forces Atlantic; Commander, Naval Surface Forces Pacific; NAVAIRWARCENWPNOIV, China Lake (Code 6712000); Program Executive Office, Submarines Commander, Submarine Forces Atlantic; Commander, Submarine Forces Pacific; Commander, NAVSEASYSCOM; Commander, Naval Supply Logistics Operations Center Ammunition; NOSSA; and Naval Munitions Command shall each provide one representative to serve on this committee.

(d) The NOMP Working Committee is responsible for developing, staffing, and prioritizing the agenda for the NOMP Policy Committee meetings, and for addressing action items assigned by the NOMP Policy Committee.

(e) The NOMP Working Committee normally meets semi-annually, or as directed by the chairperson.

(3) In addition to the Policy Committee and Working Committee commands listed above, when specifically requested, other commands shall each provide a representative to serve in a technical advisory capacity to both the NOMP Policy Committee and Working Committee.

8. Action

a. NAVAIRSYSCOM, NAVSEASYSCOM, NAVSUPSYSCOM, and NOSSA are designated as coordinators of this instruction and shall be responsible to OPNAV (N411) for:

(1) Interpreting NOMP Policy (using this instruction as the basis) for Navy and Marine Corps commands, contractors, and other military services.

(2) Ensuring that the NOMP Program and functions are funded as an integrated core program of weapons life cycle maintenance.

(3) Performing other functions and tasks as may be assigned by OPNAV (N411).

b. Commander, NAVAIRWARCENWPNDIV, China Lake (Code 6712000} shall be responsible to OPNAV (N411) for:

(1) Developing and forwarding recommended changes for approval.

(2) Developing and submitting interim changes for approval.

(3) Assisting OPNAV (N411) in processing requests for NOMP deviations.

(4) Coordinating and incorporating corrections.

(5) Preparing approved NOMP changes for printing and distribution.

(6) Stocking and distributing this instruction.

(7) Coordinating and facilitating NOMP Committee meetings.

(8) Maintaining and supporting NOMP CNO Red Shirt Web site and server assigned by OPNAV (N411).

(9) Performing other functions and tasks as may be assigned.

c. Recommended changes to the policy or procedures issued by this instruction shall be submitted following procedures contained in volume I, chapter 1.1 of reference (a).

9. Records Management. Records created as a result of this instruction, regardless of media and format, shall be managed per SECNAV Manual 5210.1 of January 2012.

10. Forms. The forms prescribed by this instruction are identified in appendix K of reference (a).

11. Reports. The reports required by this instruction are exempt from reports control per SECNAV Manual 5214.1 of December 2005.

P. H. CULLOM
Vice Admiral, U.S. Navy
Deputy Chief of Naval Operations
(Fleet Readiness and Logistics)

Distribution:
Electronic only, via Department of the Navy Issuances Web site:
http://doni.daps.dla.mil

NOMP	Highlights

OPNAVINST 8000.16D Basic Instruction

Name changed from Naval Ordnance Maintenance Management Program (NOMMP) OPNAVINST 8000.16C changed to Naval Ordnance Management Policy (NOMP) OPNAVINST 8000.16D.

Changes Policy, Working, and Advisory Committees, Memberships.

The Naval Ordnance Management Policy (NOMP) OPNAVINST M-8000.16 Manual

Volume I Concepts, Objectives, Policies, Organizations, and Responsibilities

CNO Goals and Objectives

Surface Ordnance Information

Management Information Systems

AWIS (All Weapons Information Systems)

OPOM (Optimized Performance Model)

Volume II Organizational, Intermediate and Depot Level Maintenance Responsibilities

Air Launched Missile Information

Aircraft Guns

AAE (Aircraft Armament Equipment)

AWSE Armament Weapons Support Equipment

Mine and Mine Systems information

Rockets

Surface and Subsurface Information

Volume III Appendices/Index

Tomahawk Site Activation Formerly PEO(W)INST 8023.1F

Conventional Ordnance Assessment And Maintenance Requirements Policy Formerly OPNAVINST 4850.1C

Naval Conventional Ordnance Publications Listing OPNAVINST 8010.12G

Navy Munitions Disposition Policy OPNAVINST 8026.2B

Funding Responsibility for Receipt, Segregation Storage and Issue

Conventional Ordnance Inventory Accountability OPNAVINST 8015.2B

Explosive Safety Review, Oversight, and Verification of Response Action involving Military Munitions

OPNAVINST 8020.15A/MCO 8020.13A

Acronyms

Definitions

RECORD OF CHANGES			
CHANGE NO.	**DATE**	**TITLE OR BRIEF DESCRIPTION**	**ENTERED BY**

TABLE OF CONTENTS

VOLUME I

Ordnance Concepts, Objectives, Policies, Organizations, and Responsibilities

SECTION 1

Naval Ordnance Management Policy

Chapter	Subject	Page
1.1	Introduction and Guide for Using the Naval Ordnance Management Policy	1-1-1
1.2	Introduction, Objective, Policy, and Responsibility for the Naval Ordnance Management Policy	1-2-1
1.3	Ordnance Maintenance Concepts, Levels, and Types	1-3-1
1.4	Organization for Naval Ordnance Maintenance	1-4-1
1.5	Naval Ordnance Training	1-5-1
1.6	Hazardous Material Control and Management	1-6-1
1.7	Afloat Platform Weapon Integration	1-7-1
1.8	Shipboard Weapons Integration Program	1-8-1

SECTION 2

Classification and Assignment of Maintenance Functions and Responsibilities

Chapter	Subject	Page
2.1	Introduction	2-1-1
2.2	Classification of Organizational, Intermediate, and Depot Level Ordnance Maintenance Functions	2-2-1
2.3	Assignment of Ordnance Maintenance Responsibilities	2-3-1

SECTION 3

Weapons Performance Evaluation and Reporting Program

Chapter	Subject	Page
3.1	Introduction	3-1-1
3.2	Weapons Performance Evaluation and Reporting Program	3-2-1
3.3	Weapons Assist Team Program	3-3-1
3.4	Conventional Ordnance Performance Evaluation	3-4-1
3.5	Aviation Ordnance Readiness Review	3-5-1

TABLE OF CONTENTS - contd.

SECTION 4

Material Readiness and Integrated Logistics Support

Chapter	Subject	Page
4.1	Introduction	4-1-1
4.2	Integrated Logistics Support	4-2-1
4.3	Material Management	4-3-1
4.4	Maintenance Engineering Management	4-4-1
4.5	Maintenance Management	4-5-1
4.6	Deficiency Reporting	4-6-1
4.7	Technical Data	4-7-1

SECTION 5

Management Information Systems

Chapter	Subject	Page
5.1	All Weapons Information System	5-1-1
5.2	Optimized Performance Model	5-2-1
5.3	Airborne Weapons Analysis and Reporting System	5-3-1
5.4	Aircraft Armament Equipment	5-4-1
5.5	Automated Captive Carry Entry System	5-5-1
5.6	Air Launched Weapons Support Team	5-6-1
5.7	Core Data Management System	5-7-1
5.8	Engineering Management System	5-8-1
5.9	Firing Reporting System	5-9-1
5.10	Gun Inventory Tracking and Reporting System	5-10-1
5.11	Logbook Data Entry System	5-11-1
5.12	Notice of Ammunition Reclassification/Ammunition Information Notice Reporting System	5-12-1
5.13	Targets Performance Reporting Systems	5-13-1
5.14	Configuration and Data Management Support System	5-14-1
5.15	Technical Directives	5-15-1
5.16	Common Munitions Built-In-Test Reprogramming Equipment	5-16-1
5.17	Fleet Weapons Support Team	5-17-1
5.18	Global Naval Message	5-18-1
5.19	Mine Allowance Database	5-19-1
5.20	Non Combat Expenditure Allowance	5-20-1
5.21	New Production Deliveries	5-21-1
5.22	Ordnance Load Out Planning Module	5-22-1

TABLE OF CONTENTS - contd.

SECTION 6

Training

Chapter	Subject	Page
6.1	Introduction	6-1-1
6.2	Weapon System Acquisition and Training	6-2-1
6.3	Ordnance Training/Qualification/Certification	6-3-1
6.4	Systems Acquisition Training	6-4-1
6.5	Ordnance Specialty Training	6-5-1

SECTION 7

Surface Ordnance

Chapter	Subject	Page
7.1	Introduction	7-1-1
7.2	Department of Defense Interfaces	7-2-1
7.3	Management Information System Links	7-3-1

SECTION 8

Program Management

Chapter	Subject	Page
8.1	General	8-1-1
8.2	Requirements Determination	8-2-1
8.3	Industrial Preparedness Planning	8-3-1
8.4	Non-Combat Expenditure Program	8-4-1
8.5	The Planning, Programming, Budgeting and Execution System	8-5-1

SECTION 9

Acquisition Management

Chapter	Subject	Page
9.1	Introduction	9-1-1
9.2	Acquisition Engineering	9-2-1
9.3	Procurement	9-3-1
9.4	Configuration Management	9-4-1
9.5	Product Improvement Program	9-5-1

TABLE OF CONTENTS - contd.

SECTION 10

In-Service Management

Chapter	Subject	Page
10.1	In-Service Engineering	10-1-1
10.2	Mobile Ammunition Evaluation and Reconditioning Unit	10-2-1
10.3	Mishaps and Non-Nuclear Ordnance Discrepancies	10-3-1
10.4	Technical Manuals	10-4-1

SECTION 11

Maintenance Management

Chapter	Subject	Page
11.1	Maintenance Functions	11-1-1
11.2	Maintenance Process	11-2-1

SECTION 12

Inventory Management

Chapter	Subject	Page
12.1	Inventory Management System Overview	12-1-1
12.2	Allowance Lists	12-2-1
12.3	Cataloging and Item Identification Systems	12-3-1
12.4	Fleet Ordnance Support	12-4-1
12.5	Requisition and Return Management	12-5-1
12.6	Transaction Reporting	12-6-1
12.7	Stratification Process	12-7-1

SECTION 13

Logistics Management Support

Chapter	Subject	Page
13.1	Explosives Safety Management	13-1-1
13.2	Physical Security Management	13-2-1
13.3	Transportation Management	13-3-1
13.4	Environmental Management	13-4-1

TABLE OF CONTENTS - contd.

SECTION 14

Ordnance Demilitarization/Disposal Management

Chapter	Subject	Page
14.1	Demilitarization Responsibilities	14-1-1
14.2	Demilitarization/Disposal Authorization Process	14-2-1

SECTION 15

Security Assistance Program Management

Chapter	Subject	Page
15.1	Foreign Military Sales	15-1-1
15.2	Standardization Agreements	15-2-1

SECTION 1

Naval Ordnance Management Policy

Table of Contents

Chapter	Subject	Page
1.1	Introduction and Guide for Using the Naval Ordnance Management Policy	1-1-1
1.2	Introduction, Objective, Policy, and Responsibility for the Naval Ordnance Management Policy	1-2-1
1.3	Ordnance Maintenance Concepts, Levels, and Types	1-3-1
1.4	Organization for Naval Ordnance Maintenance	1-4-1
1.5	Naval Ordnance Training	1-5-1
1.6	Hazardous Material Control and Management	1-6-1
1.7	Afloat Platform Weapon Integration	1-7-1
1.8	Shipboard Weapons Integration Program	1-8-1

CHAPTER 1.1

Introduction and Guide for Using the Naval Ordnance Management Policy

Table of Contents

Paragraph	Subject	Page
1.1.1	Introduction	1-1-1
1.1.2	How to Obtain Copies	1-1-1
1.1.3	Guide for using the NOMP	1-1-1
1.1.4	Procedures for Recommending and Submitting Changes, Corrections, or Requesting Deviations from the NOMP	1-1-2
1.1.5	Definitions	1-1-2
1.1.6	Submission of Recommendations or Requests	1-1-2
1.1.7	Processing of Recommendations or Requests	1-1-3

List of Illustrations

Figure	Title	Page
1-1-1	Sample Change Recommendation Letter	1-1-4
1-1-2	Sample Deviation Recommendation Letter	1-1-5
1-1-3	Sample Programmatic Change Letter	1-1-6
1-1-4	NOMP Change Process	1-1-7
1-1-5	NOMP Interim Change Process	1-1-8
1-1-6	NOMP Programmatic Change Process	1-1-9

CHAPTER 1.1

Introduction and Guide for Using the Naval Ordnance Management Policy

1.1.1 Introduction. The Naval Ordnance Management Policy (NOMP) manual is the major implementing directive which issues policies, procedures, and responsibilities for activities involved in or supporting Naval ordnance management. NOMP manual has been and shall continue to be developed and refined as required to incorporate the changes brought about by advances in technology and/or improved management and maintenance policies.

1.1.2 How to Obtain Copies.

1.1.2.1 Copies of the OPNAVINST 8000.16D (NOMP) are available for download in Portable Document Format (PDF) at the CNO Redshirt website or Department of the Navy Issuances (DONI) at http://doni.daps.dla.mil/default.aspx. Interim Changes are released by OPNAV N411 by via Naval message and shall be kept on file until release of the next revision of the NOMP or superseded by a subsequent Interim Change. Interim Changes are available for download on the CNO Redshirt and DONIs. For commands with limited or no Internet connectivity you may email the Points of Contact (POCs) on the CNO Redshirt or by letter request to Commander, Naval Air Warfare Center Weapons Division, Code 671200D, 1 Administration Circle, Bldg. 2466, Mail Stop 6202, China Lake, CA 93555.

1.1.2.2 Additional Copies. Send a letter or e-mail with justification to NAVAIRWARCENWPNDIV, Code 671200D.

1.1.2.3 Internal Control and Distribution. Within Naval Forces and Marine Corps aviation activities, the internal control and distribution of this manual is the responsibility of the Ordnance Officer.

1.1.3 Guide for using the NOMP.

1.1.3.1 The NOMP manual is divided into volumes, sections, chapters and appendices. A volume contains multiple sections. A section contains several related chapters and a chapter contains major and subordinate paragraphs organized to facilitate the sequential presentation of information for clarity and ease of understanding.

1.1.3.2 Each paragraph is numbered with a unique decimal system. The first digit identifies the Section; the second and subsequent decimals, the Chapter, Paragraph, Subparagraph, and Sub-subparagraph.

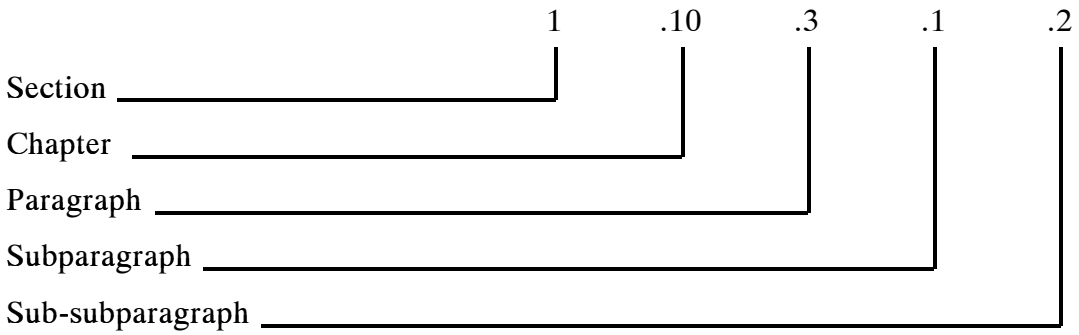

1.1.3.3 When looking for a specific item of information, use the table of contents provided for each chapter which lists the paragraphs, subjects, and page numbers of material within that chapter.

1.1.3.4 The pages are numbered in a separate series for each volume, section, chapter, appendix and index. The pages of each chapter are numbered in sequence and are preceded by the section and chapter number, e.g., the third page in Section 2, Chapter 4 is numbered 2-4-3. The volume number is located at the top of each page. Each appendix page is designated with a letter which identifies the appendix followed by sequential number, e.g., A-1, B-7, etc.

1.1.3.5 Illustrations are provided to clarify or amplify the text and are located near the text to which they apply. They are numbered sequentially within each chapter and are preceded by the section and chapter number, e.g., the first figure in Section 6, Chapter 2 is numbered 6-2-1.

1.1.4 Procedures for Recommending and Submitting Changes, Corrections, or Requesting Deviations from the NOMP. All changes to this manual are approved or disapproved by Chief of Naval Operations (CNO) (N411). All changes require review and evaluation by the NOMP Working and Policy Committees, except for programmatic or changes that are safety related. NAVAIRWARCENWPNDIV, Code 671200D, is responsible for coordinating and managing these changes.

1.1.5 Definitions.

1.1.5.1 Change. A modification to the existing policies or procedures contains within the NOMP.

1.1.5.2 Interim Change. A change issued by CNO message to correct a procedure, policy, practice, or situation adversely affecting maintenance, ships weapons systems, weapons, aircraft and personnel safety, readiness, or a critical function within the NOMP. Interim changes will be incorporated in the next revision of the NOMP.

1.1.5.3 Correction. A modification in punctuation, grammar, capitalization, spelling, syntax, or tense; and typographical errors, word omissions, or ambiguities not affecting policies or procedures.

1.1.5.4 Deviation. A temporary departure from policies, procedures, or responsibilities in the NOMP. Deviations are granted by CNO for a specific duration not to exceed one year, for a situation or set of circumstances not requiring a revision, addition, or deletion to the NOMP.

A departure from an established rule or standard. For explosives safety applications, a deviation authorized by the CNO is considered to be a departure from DON/DOD criteria, but under strictly controlled and regulated conditions based upon compelling operational need. Deviations which may be authorized by appropriate authority within the Naval service are event waivers, waivers, and exemptions.

1.1.6 Submission of Recommendations or Requests.

1.1.6.1 Corrections. Recommendations to correct administrative discrepancies shall be submitted via e-mail using the NOMP office contact link located on the CNO Redshirt website.

1.1.6.2 Changes. Recommendations to policies or procedures in the NOMP shall be submitted by Naval letter to NAVAIRWARCENWPNDIV, Code 671200D, with a copy to CNO (N411E). Figure 1-1-1 is a sample change recommendation letter. Change recommendations can be mailed or submitted electronically if the recommendation has a signature and is formatted in accordance with Figure 1-1-1. For Programmatic Changes (i.e. MDD, SIST, etc....) refer to paragraph 1.1.7.3.

1.1.6.3 Deviations. Requests to deviate from the NOMP shall be submitted by Naval letter to CNO (N411E) with a copy to NAVAIRWARCENWPNDIV, Code 671200D. Figure 1-1-2 is a sample deviation recommendation letter. Deviation request can be mailed or submitted electronically if the deviation has a signature and is formatted in accordance with Figure 1-1-2.

1.1.6.4 Technical Update. To correct administrative, organizational or technical information not affecting existing policies or procedures of the NOMP. Recommendations to update or include additional commodities, ordnance technical data, organizational structures, functions or responsibilities shall be submitted by Naval letter, as a change recommendation, to NAVAIRWARCENWPNDIV, Code 671200D, with a copy to CNO (N411E). Refer to paragraph 1.1.6.2.

NOTE

To view approved Interim Changes and Deviations, access the CNO Redshirt website.

1.1.7 Processing of Recommendations or Requests.

1.1.7.1 Changes. Upon receipt of a change recommendation, NAVAIRWARCENWPNDIV, Code 671200D, will review it, conducting liaison as necessary with affected organizations. Change recommendations accepted for processing are then assigned a NOMP Report Control Number (RCN). Figure 1-1-4 is an example of the change process.

1.1.7.2 Interim Changes. NAVAIRWARCENWPNDIV, Code 671200D, upon receipt of a report identifying a situation, procedure, or policy that adversely impacts a critical function in the NOMP, will perform research and liaison as required to verify or substantiate the report. If warranted, an interim change will be developed for release by CNO (N411). Figure 1-1-5 is an example of the interim change process.

1.1.7.3 Programmatic Interim Changes. These changes are submitted by the Program Manager (PM) via appropriate PEO to CNO (N411) with a copy to NAVAIRWARCENWPNDIV, Code 671200D, for approval. Figure 1-1-3 is a sample programmatic change letter. Programmatic interim changes must be submitted with the change recommendation letter and supporting documentation. Figure 1-1-6 is an example of the programmatic interim change process.

1.1.7.3.1 NAVAIRWARCENWPNDIV, Code 671200D, will send an acknowledgement of receipt to the originator, with a copy to CNO N411, for all change recommendations.

1.1.7.3.2 Upon completion of the review, NAVAIRWARCENWPNDIV, Code 671200D, submits the change proposal to the appropriate Subject Matter Experts (SME) for review.

1.1.7.3.3 Once the SME review is complete, the NOMP office will present the change recommendation, including any comments, modifications, or recommendations developed during the review process to the NOMP working committee. The NOMP Working Committee will review the change recommendation and vote using the NOMP Reports Action Tracking System (RATS) module located within All Weapons Information System (AWIS).

DEPARTMENT OF THE NAVY
Your Command Name
Your Command Address

In Reply Refer To:
8000.16D
Ser 22/333
Appropriate Date

From: Submitting Activity
To: Commander, Naval Air Warfare Center Weapons Division (Code 671200D)

Subj: CHANGE RECOMMENDATION TO OPNAVINST 8000.16D

Ref: (a) OPNAVINST 8000.16D

1. Recommend change to reference (a) to add MUSTANG air-to-ground missile to OPNAVINST 8000.16D.

2. Our point of contact is Ms. M. Bowen, DSN 999-1111.

D. PREASEAU
By direction

Copy to:
Chief of Naval Operations (Code N411E)

Figure 1-1-1. Sample Change Recommendation Letter

DEPARTMENT OF THE NAVY
Your Command Name
Your Command Address

In Reply Refer To:
8000.16D
Ser 33/444
Appropriate Date

From: Submitting Activity
To: Chief of Naval Operations (Code N411E)
Via: Chain of Command

Subj: DEVIATION FROM OPNAVINST 8000.16D

Ref: (a) OPNAVINST 8000.16D

1. Figure 1-4-124 of Volume II to reference (a) shows a retest after re-mating of sections for HELLFIRE missile Intermediate maintenance processing.

2. Processing requirement projections for the forthcoming load out of the USS INCHON (LPH-12) indicate a work load which will preclude retest after re-mating.

3. Please grant this activity a deviation from the reference (a) requirement to retest HELLFIRE missiles after re-mate to apply only for missiles undergoing intermediate maintenance testing for load out on the USS INCHON prior to its forthcoming deployment.

4. Our point of contact is GySgt I. Malik, DSN 888-1111.

R. ROWLAND
By direction

Copy to:
NAVAIRWARCENWPNDIV (Code 671200D)

Figure 1-1-2. Sample Deviation Recommendation Letter

DEPARTMENT OF THE NAVY
Your Command Name
Your Command Address

In Reply Refer To:
8000.16D
Ser 33/444
Appropriate Date

From: Program Office
To: Chief of Naval Operations (Code N411E)
Via: Chain of Command

Subj: PROGRAMATIC CHANGE TO OPNAVINST 8000.16D

Ref: (a) OPNAVINST 8000.16D

1. Serviceable In Service Time (SIST) was established to maintain the aging inventory of IR Maverick assets. In October of 2002 ASN(RDA) and OPNAV decided to divest and shut down the program with the exception of the P-3 community. With no maintenance funding available to continue a 72-month SIST, we have since transitioned to Reliability Centered Maintenance (RCM) and will continue as such until the depletion of the remaining inventory.

2. Recommend changing reference (a), Appendix D, page D-8 from: AGM-65F Guided Missile Surface Attack Imaging Infrared PD63 RCM/72 mos to AGM-65F Guided Missile Surface Attack Imaging Infrared PD63 RCM. Additionally, request an Interim Change as current assets in the Fleet are down for servicing pending this change to the instruction.

3. Our point of contact is GySgt I. Malik, DSN 888-1111.

R. ROWLAND
By direction

Copy to:
NAVAIRWARCENWPNDIV (Code 671200D)

Figure 1-1-4. Sample Programmatic Change Letter

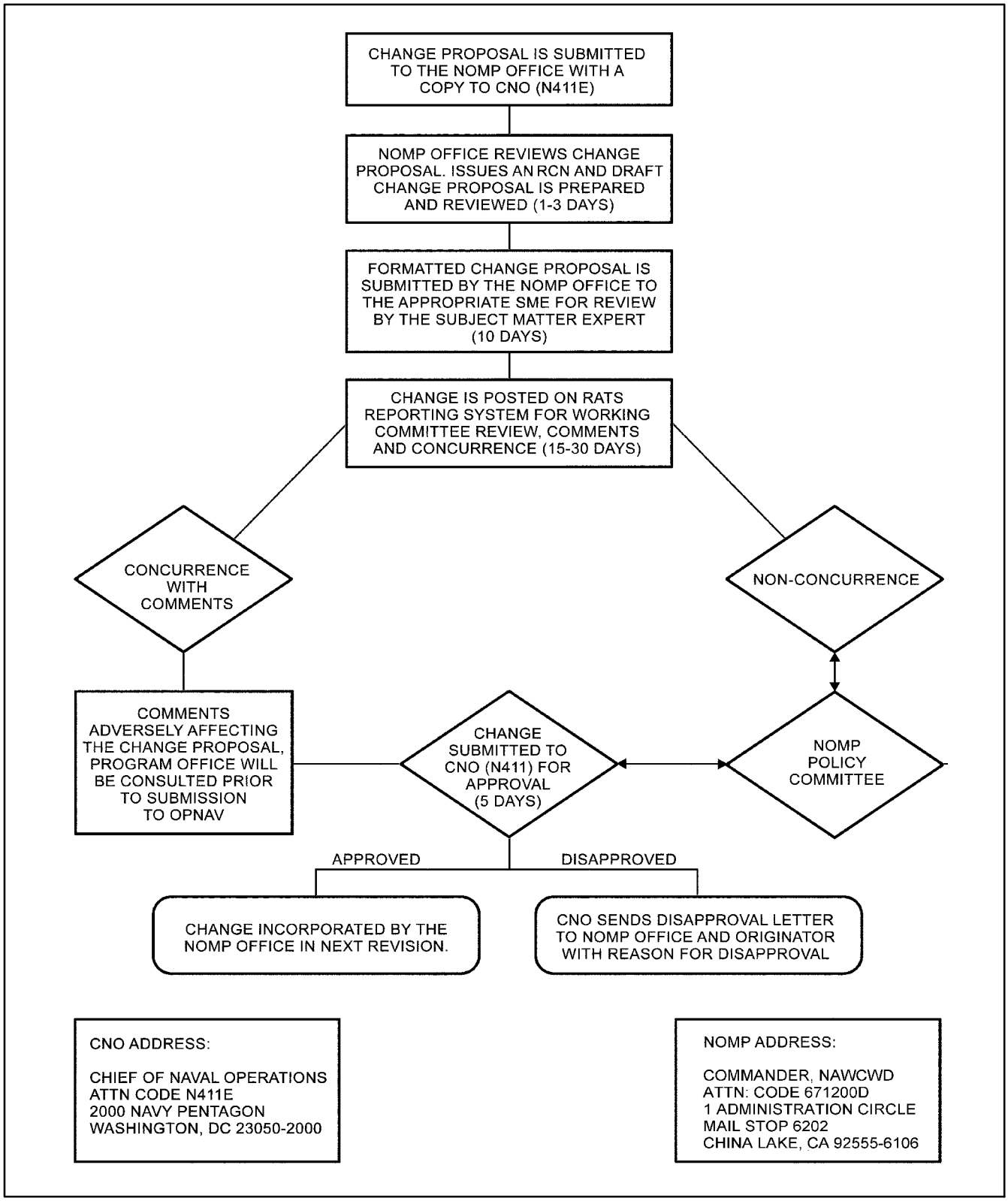

Figure 1-1-4. NOMP Change Process

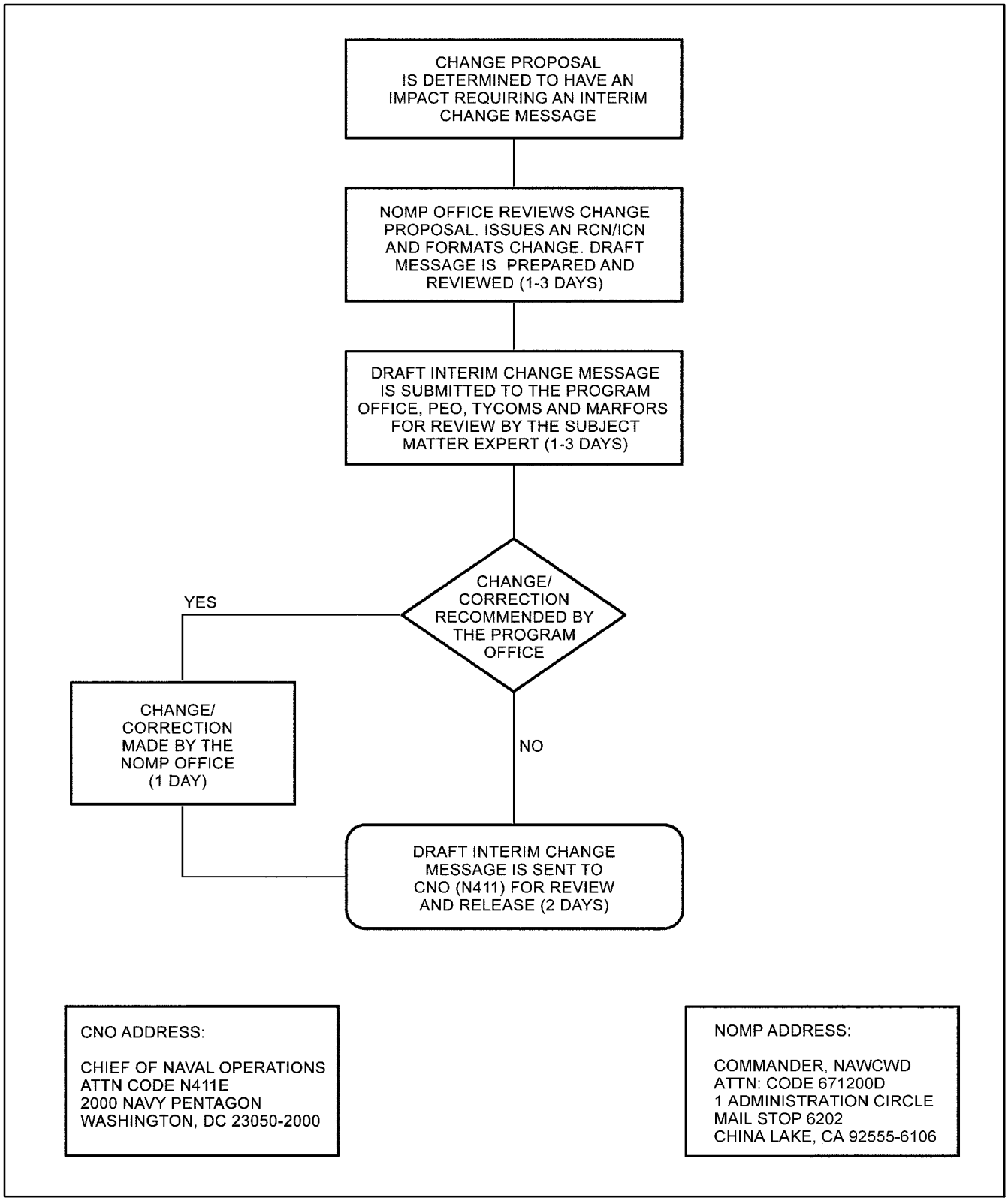

Figure 1-1-5. NOMP Interim Change Process

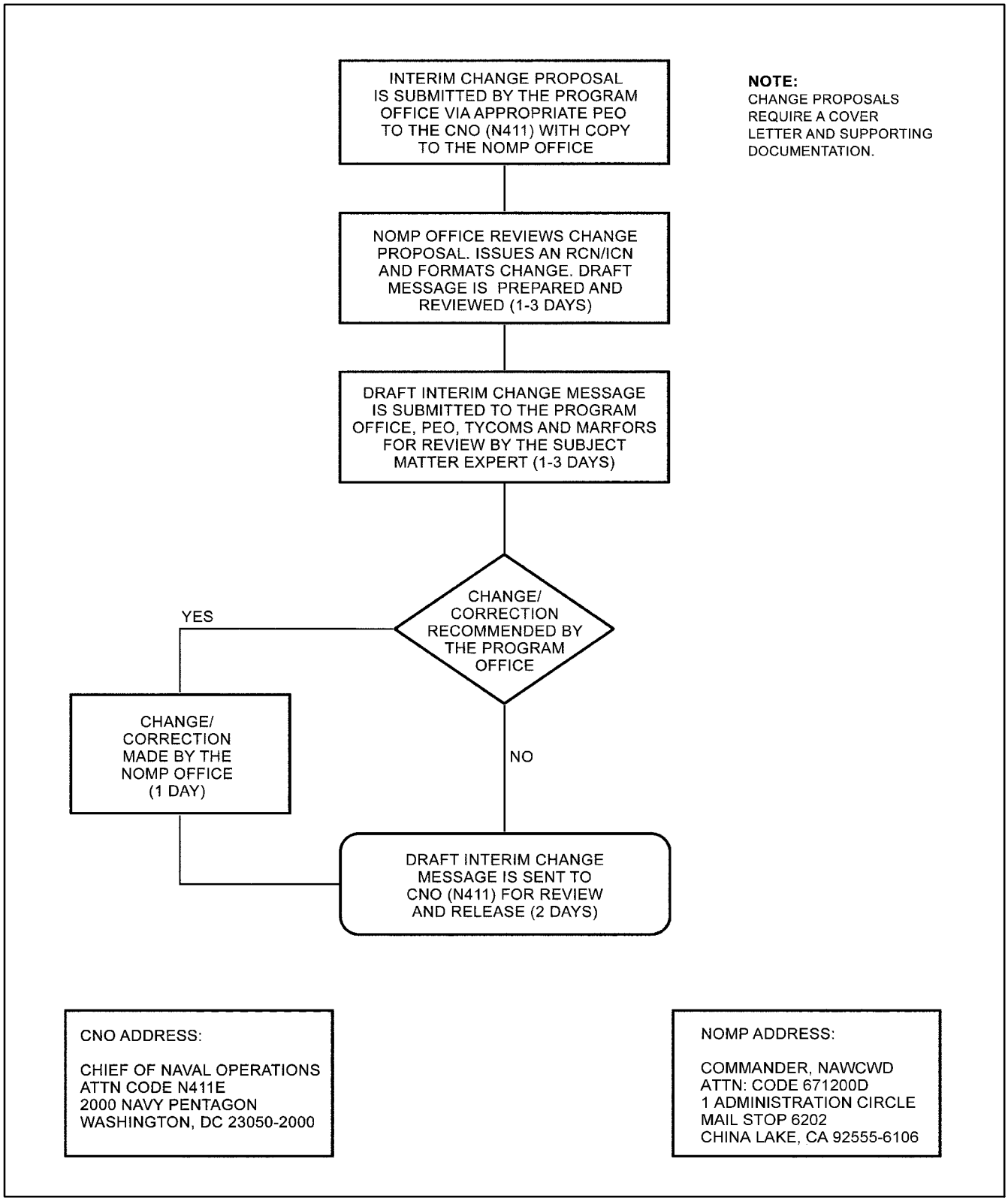

Figure 1-1-6. NOMP Programmatic Change Process

1.1.7.3.4 Upon completion of the NOMP Working Committee vote, NAVAIRWARCENWPNDIV, Code 671200D shall:

a. Concurrence. Working committee concurs with the change proposal. NAVAIRWARCENWPNDIV, Code 671200D will submit change proposal to NOMP Policy Committee for approval, if required. If not required, submit change proposal to CNO (N411) for final action.

b. Concurrence with Comments. Working committee concurs, but has comments adversely affecting the change proposal; the comments will be submitted to the SME for approval. Once approved, NAVAIRWARCENWPNDIV, Code 671200D, will incorporate comments and submit change proposal to NOMP Policy Committee for approval, if required. If not required, submit change proposal to CNO (N411) for final action.

c. Non-concurrence. Working committee does not concur with change proposal, NAVAIRWARCENWPNDIV, Code 671200D, will forward change proposal to NOMP Policy Committee for action.

1.1.7.3.5 Upon completion of the NOMP Policy Committee vote, NAVAIRWARCENWPNDIV, Code 671200D shall:

a. Concurrence. Policy committee concurs with the change proposal. NAVAIRWARCENWPNDIV, Code 671200D will submit change proposal to CNO (N411) for final action.

b. Concurrence with Comments. Policy committee concurs, but has comments adversely affecting the change proposal; the comments will be returned to Working committee for reconciliation. Refer to paragraph 1.1.7.3.4b for Working committee action.

c. Non-concurrence. Policy committee does not concur with change proposal, NAVAIRWARCENWPNDIV, Code 671200D, will forward change proposal to CNO (N411) for action.

d. All change proposals whether approved or disapproved, will be forwarded to CNO (N411) for final determination.

1.1.7.3.6 Upon receipt of a change proposal, CNO (N411) shall:

a. Approval. Change is incorporated into the NOMP in the next revision.

b. Disapproval. CNO (N411) issues letter to originator, with copy to NAVAIRWARCENWPNDIV, Code 671200D, stating reasons for disapproval.

1.1.7.4 Corrections. Upon receipt of correspondence identifying a correction, NAVAIRWARCENWPNDIV, Code 671200D, will send a reply to the originator acknowledging receipt and status. Upon validation of the recommended correction, Code 671200D will incorporate correction into next revision of the NOMP.

1.1.7.5 Deviations. CNO (N411), assisted by NAVAIRWARCENWPNDIV, Code 671200D, will research and provide liaison as needed to verify or substantiate the need for requested deviations. Following this investigation, CNO will approve or disapprove the deviation request. Figure 1-1-2 applies.

1.1.7.6 Technical Updates. Upon completion of the review, NAVAIRWARCENWPNDIV, Code 671200D, will develop technical updates for processing. Paragraphs 1.1.6.4 apply.

CHAPTER 1.2

Introduction, Objective, Policy, and Responsibility for the Naval Ordnance Management Policy

Table of Contents

Paragraph	Subject	Page
1.2.1	Introduction	1-2-1
1.2.2	Objective	1-2-1
1.2.3	Funding	1-2-4
1.2.4	Manpower Management	1-2-5
1.2.5	Training	1-2-6
1.2.6	Material Management	1-2-6
1.2.7	Operating Procedure	1-2-6
1.2.8	Scope	1-2-7
1.2.9	Policy	1-2-8
1.2.10	Responsibility	1-2-8

CHAPTER 1.2

Introduction, Objective, Policy, and Responsibility for the Naval Ordnance Management Policy

1.2.1 Introduction. The Naval Ordnance Management Policy (NOMP) is sponsored and directed by the Chief of Naval Operations (CNO) and coordinated by the Commander, Naval Air Systems Command (COMNAVAIRSYSCOM). This chapter addresses CNO objectives, policies, and responsibilities for the Naval Ordnance Management Policy.

1.2.2 Objective.

1.2.2.1 The objective of the NOMP is to achieve and continually improve material readiness and safety standards established by the CNO with optimum use of manpower, material, and funds. CNO's material readiness standards include the maintenance and repair of ordnance, material, and equipment at that level of maintenance which will ensure optimum economic use of resources; the application of a systematic planned maintenance program; and the collection, analysis, and use of pertinent data in order to effectively improve material condition and safety.

1.2.2.2 The methodology for achieving the spirit and intent of the NOMP objective is labeled "performance improvement." Performance improvement is an "all-hands" effort, which focuses on service and close support to customers. As a primary prerequisite, the mission must be clearly understood and communicated to everyone in the organization. It is essential all personnel know their job, understand their contribution to mission accomplishment, and be sensitive to customer requirements. New or improved cost-effective capabilities and processes must be continuously pursued. Mutually supporting teamwork, constant communication, and compatible measures are critical elements for success. Performance improvement must be targeted to accomplish the following broad goals:

a. Increased readiness.

b. Improved quality.

c. Improved deployability.

d. Improved sustainability.

e. Reduced costs.

f. Enhanced preparedness for mobilization, deployability, and contingency operations.

g. Enhanced supply availability.

h. Improved morale and retention.

1.2.2.3 Performance Improvement. While the overall performance of our units has been excellent, significant improvements are still possible and necessary. To realize continuous gains, performance improvement must be fully understood and actively managed. As new techniques and concepts evolve, they must be evaluated and then implemented. Before performance improvement efforts can be successfully managed, all performance elements must be defined.

1.2.2.4 Performance Elements. The seven performance elements are defined as follows:

1.2.2.4.1 Productivity. Productivity is the pivotal and an integral part of the seven performance elements in that it is highly interrelated with all other elements. Productivity must always be viewed in terms of how it impacts effectiveness, efficiency, quality, innovation, quality of work life, and budget. Productivity relates the outputs created by a system to the inputs required to create those outputs as well as the transformation process of inputs to outputs. Inputs in the form of people, personnel, skills, material, ready-for-issue and not ready-for-issue components, bit or piece parts, equipment, support equipment, hand tools, methods, technical publications, directives, data, environment, facilities, funding, and energy are brought into the system. These inputs are transformed into outputs (mission-capable or full mission-capable aircraft, ready-for-issue components, manufactured goods, and inspection and calibration services, ships weapons systems and combat readiness) which are vital in providing necessary maintenance and logistic support to achieve and sustain Naval ordnance readiness.

1.2.2.4.2 Effectiveness. Effectiveness as a function of the outputs, tells us how well goals are achieved. For example, Intermediate Maintenance Activities (IMAs) and Ships Intermediate Maintenance Activities (SIMAs) effectiveness is demonstrated by how well repairs are completed and processed to ensure that maximum readiness is achieved. In squadrons and ships, it is how well these units can perform their mission.

1.2.2.4.3 Efficiency. Efficiency is the relationship between actual and planned resources. It tells how well the resources were used, as in manpower utilization.

1.2.2.4.4 Quality. Quality is the degree of satisfaction in a product or service as determined by the customer. Fit, form, function, reliability, maintainability, consistency, and uniformity are some characteristics that are affected by quality.

1.2.2.4.5 Innovation. Innovation is the creativity applied to the transformation process; for example, development of new repair processes.

1.2.2.4.6 Quality of Work Life. Quality of work life is a function of morale and other factors which affect personnel pride and motivation.

1.2.2.4.7 Budget Ability. Budget ability is the ability to perform the assigned mission within allotted resources.

1.2.2.5 Navy and Marine Corps squadrons fly aircraft in excess of over one million hours annually, our ships operate 365 days a year. To help support these operations, Intermediate and Depot level maintenance activities process millions of aviation repairables and ships CASREPs annually. Due to the magnitude of these numbers, relatively small performance improvements have a substantial impact on reducing costs. Consequently, the implementation of performance improvement must receive attention and support at all echelon.

1.2.2.6 CNO Strategy for Performance Improvement. The Department of Defense Strategic Sustainability Performance Plan for 2010-2020 is DOD's first Department-wide sustainability plan. It lays out goals and performance expectations for the next decade, establishing the path by which DOD will serve as a model of sustainability for the nation. The Department's vision of sustainability is to maintain the ability to operate into the future without decline - either in the mission or in the natural and manufactured systems that support it. DOD embraces sustain-

ability as a means of improving mission accomplishment. Costs can be measured in lost dollars, in reduced mission effectiveness, and in U.S. service member lives. Sustainability is not an individual Departmental program; rather, it is an organizing paradigm that applies to all DOD mission and program areas. Performance improvement management guidance, initiatives implemented, results achieved, and new or revised objectives are issued by CNO.

1.2.2.6.1 The following specific performance improvement objectives in the CNO strategic plan provide direction to all echelons. To effectively achieve these objectives, an attitude of commitment, a sense of urgency, and a basis for action must prevail. These specific objectives are:

a. Seek to improve the professionalism of Maintenance Managers, Acquisition Managers, and Logistician through development of a maintenance manager's career training program.

b. Develop comprehensive measures of performance improvement and provide appropriate analytical tools.

c. Create constancy of purpose towards improving performance and allocating resources to provide for long-range requirements.

d. Define and implement individual activity, Aircraft Controlling Custodian (ACC) and Type Commander (TYCOM) strategic plans. Use statistical methods to identify problems in the system whose correction can improve performance.

e. Continue to support the implementation of the Naval Aviation Logistics Command Management Information System (NALCOMIS).

f. Adopt a new philosophy for performance improvement. Any substantial improvement is the responsibility of management and must come from the system.

g. Continue performance improvement conferences, both at the ACC, TYCOM and individual activity level.

h. Work towards achieving and maintaining a stable work force.

i. Ensure performance improvements focus on and suit contingency mobilization requirements.

j. Understand the financial impact of repair action decisions. Identify components for which new or expanded repair capabilities would be cost effective. Emphasis should remain on the repair of mission essential items.

k. Require acquisition managers to focus on design criteria for reliability and maintainability, maintenance concepts, transportability, utilization of diagnostics, and maintenance training.

l. Sustain the effort to ensure comprehensive review and funding support to provide repair parts.

m. Identify the best practices and procedures of individual activities and implement them at other activities when feasible and cost effective through analysis of performance among Organizational, Intermediate, Depot maintenance activities, Fleet Readiness Centers (FRCs), ships and squadrons.

n. Identify, evaluate, and report on the impact of current directives, programs, and practices which impede the objectives of performance improvement.

o. Improve technical training to ensure "state of the art" level of training.

p. Focus supervision on helping our people do a better job.

q. Insist that Naval aviation, ship and weapons system suppliers demonstrate evidence of statistical control of quality. Insist that Naval contracts are awarded on life cycle cost basis, not on initial price tag alone.

1.2.2.6.2 The Naval Ordnance Management Policy (NOMP) Policy Committee reviews and resolves issues involving NOMP revisions and provides direction for implementation.

1.2.2.6.3 COMNAVAIRSYSCOM and COMNAVSEASYSCOM are the focal points for Fleet maintenance performance improvement matters. New techniques and concepts evolve periodically which require review for potential implementation. To assist in this endeavor, the Naval Aviation Maintenance Program is responsible for:

a. Pursuing new performance improvement methods and maintaining currency in performance management techniques.

b. Providing technical assistance for performance improvement efforts at ACC or TYCOM and Fleet activities.

c. Assisting with the transfer of performance improvement ideas among all activities.

d. Generate awareness for performance improvement.

e. Track action items assigned by the Executive Steering Committee.

1.2.2.6.4 Naval Ordnance Safety and Security Activity's (NOSSA's) Navy Ordnance Assessment Office (NOAO), as the Department of the Navy's (DON's) Technical Authority for Ordnance Assessment, performs or directs aspects of the OA program to assist OPNAV and the Program Managers as specified in Volume III, Appendix G.

1.2.2.6.5 Naval Supply Systems Command, via NAVSUP GLS AMMO:

a. Provides inventory management support and move unserviceable ordnance consistent with maintenance schedules.

b. Publish a Master Repairables Item List (MRIL) to facilitate optimum Fleet turn-in/retrograde of unserviceable ordnance.

c. Incorporates ordnance maintenance production delivery projections into positioning plans and readiness metrics.

1.2.2.7 To ensure warfighting capability and deployability while enhancing Fleet readiness, sustainability, and preparedness for mobilization, Naval maintenance activities must build on the excellence they have already achieved and continue to improve their performance. Performance improvement initiatives at every level contribute toward accomplishing these goals while reducing cost. Every individual must be encouraged to participate and provide their best efforts. The challenge of maintaining Fleet readiness while keeping Naval forces affordable is paramount.

1.2.3 Funding. CNO annually allocates materials and services for support of the NOMP. Allocations are based upon competing requirements for the resources available in the Six Year

Defense Plan during the development of the Program Objectives Memorandum (POM). The POM contains force and resource recommendations, with rationale and risk assessment, and must conform with the fiscal guidance issued by the Secretary of Defense (SECDEF). It is developed by fiscal year and is concentrated 2 fiscal years in advance. It includes projections of forces programmed for 8 fiscal years and manpower programmed for 6 fiscal years. The required forces are first identified, then manpower requirements necessary to support the planned forces are determined. The Department of the Navy's POM is the annual recommendation to SECDEF for the detailed application of resources. Upon receipt and analysis of the POM submission for each military department, SECDEF issues program decisions. These decisions include intended adjustments in the POM submission. Oppositions to these decisions may be submitted by the military departments. When program decisions are finalized, departments and agencies submit budget estimates for the budget year, usually the next fiscal year, to SECDEF. Upon receipt and after evaluation of the budget estimates, SECDEF issues program budget decisions and submits the Department of Defense (DOD) budget as part of the President's budget submitted to Congress. CNO distributes the funds after Congress approves them.

1.2.4 Manpower Management. CNO directs and coordinates the development and implementation of the manpower planning system to:

a. Determine minimum military and civilian manpower requirements to achieve approved operational and mission demands.

b. Provide staffing standards for functions performed ashore and afloat, based on recognized management and industrial engineering techniques and objective determinations of workload.

c. Provide a system for combining manpower requirements information at levels above the activity level to support and justify Navy manpower requirements during all stages of the planning, programming, and budgeting system.

d. Relate support manpower requirements of the shore establishment to the changing demands of the operating forces.

e. Provide reliable planning information to personnel inventory managers, both military and civilian.

f. Ensure manpower requirements for maintenance and operation of new weapon systems, equipment, and initiatives are specified sufficiently in advance of Fleet introduction to allow them to be considered in the programming cycle and for development of requisite personnel skill levels.

g. Reduce response time to management queries for manpower information.

1.2.4.1 While policy control and direction of the Navy manpower requirements system is vested in CNO, support for these programs is provided by the Navy Manpower Analysis Center.

1.2.4.2 Manpower requirements are included in the DOD planning, programming, and budgeting system. This system operates on an 18-month cycle and is repeated annually. Navy manpower requirements are submitted via the POM.

1.2.4.3 CNO publishes annual guidelines to manpower claimants concerning submission of manpower requests for consideration in the POM process. Manpower claimants screen, assign

priorities, and justify requests for additional manpower and submit only those requests which are realistic and competitive. Manpower claimants must realize that in POM development, all requests for resources; for example, manpower, training, support, and fiscal, compete with each other and only the most competitive requirements may be approved. Additional manpower funding must be justified by the manpower claimant, the sponsor, and CNO. Manpower requests which contribute to increased readiness or readiness improvements have the highest chance of success for funding during the POM year.

1.2.5 Training.

1.2.5.1 Training is imperative at all levels of leadership. Commanding Officers shall ensure that Sailors and Marine Corps personnel are properly trained and/or have attended suitable schools to enhance their knowledge, become an effective team member and increase their units overall warfighter capability. Commanding Officers shall ensure, as a minimum requirement, all Surface Ordnance, Aviation Ordnance and Fire Control Officers assigned attend the appropriate schools/training for weapons systems they are responsible for, prior to or 60 days after assuming their duties and should attend appropriate school/training.

1.2.5.2 Newly commissioned or designated Aviation Ordnance Officers (Navy 6360/7361 and Marine Corps 6502) enroute to their first aviation ordnance billet assignment, shall be ordered to attend the Aviation Ordnance Officers Career Progression (AOOCP) Course, Level I. The AOOCP Course is a 6-week period of instruction that is designed for newly commissioned Aviation Ordnance Limited Duty and Chief Warrant Officers. The course is formatted to build upon previously acquired skills and provide a professional career path for Aviation Ordnance Officers. Senior enlisted (Navy E-6 through E-9, and Marine Corps E-6 through E-9) aviation ordnance personnel shall attend the AOOCP course at the earliest opportunity.

1.2.5.3 Mid/upper-level Navy and Marine Corps Aviation Ordnance Officers/Senior enlisted shall attend the AOOCP Course, Level II/III, when enroute to assigned ordnance management billets.

1.2.6 Material Management. CNO directs and coordinates the development and implementation of the material acquisition planning system via the systems commands. Material requirements, like manpower requirements, are submitted via the POM.

1.2.7 Operating Procedure. The intent of the NOMP is to establish standard operating procedures and standard maintenance procedures and programs for all Navy and Marine Corps Organizational, Intermediate, and Depot level maintenance activities. It is intended to provide an integrated system to perform ordnance maintenance and all related operating and support functions. Key features require that the NOMP be:

a. Comprehensive.

b. Consolidated.

c. Based on Fleet input.

d. Command oriented.

e. Easy to read and use.

1.2.7.1 The NOMP has multiple uses at all echelon. It should:

a. Guide daily operations.

b. Establish ordnance maintenance requirements.

c. Provide a basis for training documents.

d. Address weapon system support planning.

e. Function as a standard reference document.

1.2.7.2 The NOMP includes CNO objectives, goals, and priorities; provide maintenance concepts and standards; define responsibilities and command relationships; assign specific maintenance tasks and functions; detail maintenance procedures; and provide management tools, special programs, and Maintenance and Material Management (3M) documentation procedures.

1.2.8 Scope.

1.2.8.1 The NOMP is designed to support CNO readiness objectives by ensuring timely and effective Fleet logistics support. The NOMP governs the management of Naval weapons maintenance operations, procedures, and associated reporting systems.

1.2.8.2 The NOMP applies to all Navy and Marine Corps activities concerned with the operation, maintenance, or rework of weapons, systems, or equipment. In addition to specifying management policy and maintenance processes, the NOMP addresses interactive programs including maintenance management, maintenance engineering, Fleet support, inventory management, asset and fiscal resources, and associated reporting and automated data processing systems.

1.2.8.2.1 Air, Surface, Sub-Surface Missiles

a. AMRAAM	e. MAVERICK	i. HELLFIRE	m. RAM
b. SIDEWINDER	f. AARGM	j. JSOW	n. TOMAHAWK
c. SLAM-ER	g. HARM	k. TOW	o. ESSM
d. SPARROW	h. HARPOON (Air/Surface)	l. STANDARD	p. NSSM

1.2.8.2.2 Ordnance/Ammunition.

a. Bombs/Guidance Kits and related components.

b. Special weapons.

c. Aircraft gun ammunition.

d. Ship gun ammunition.

e. Small arms and landing party ammunition.

f. Demolition devices.

g. Cartridges and cartridge actuated devices.

h. Aircraft rockets, rocket launchers, and jet/rocket assisted takeoff rocket motors.

i. Propellant Actuated Devices.

j. Pyrotechnics and screening and marking devices.

k. Airborne electronics warfare expendable countermeasures, including infrared decoy flares, chaff countermeasures, and active expendable decoys.

l. Underwater sound signals and sonobuoys.

1.2.8.2.3 Aircraft and ship guns.

1.2.8.2.4 Aerial targets and drones.

1.2.8.2.5 Mines.

1.2.8.2.6 Mine Neutralization Systems.

1.2.8.2.7 Torpedos.

1.2.8.2.8 Unmanned air vehicles and remotely piloted vehicles.

1.2.8.2.9 Aircraft armament equipment, AWSE, MHE, WHE and Launchers associated with the above weapons.

1.2.8.2.10 Armament support equipment, weapons support equipment, and logistics support equipment associated with the above weapons.

1.2.9 Policy. CNO provides the basis for the NOMP and sets policy in the basic manual for the assignment of maintenance responsibilities to all activities of the Naval establishment concerned with the maintenance, repair, or support of ordnance, systems, or equipment.

1.2.10 Responsibility. Weapons maintenance is a command responsibility administered through the military chain of command. Technical management is exercised in consonance with this manual, together with directives developed and published by COMNAVAIRSYSCOM and COMNAVSEASYSCOM.

CHAPTER 1.3

Ordnance Maintenance Concepts, Levels, and Types

Table of Contents

Paragraph	Subject	Page
1.3.1	Maintenance Concepts	1-3-1
1.3.2	Maintenance Levels	1-3-1
1.3.3	Maintenance Types	1-3-4

CHAPTER 1.3

Ordnance Maintenance Concepts, Levels, and Types

1.3.1 Maintenance Concepts.

1.3.1.1 The NOMP supports the CNO readiness, safety, health and environmental objectives and provides for optimum use of manpower, facilities, material, and funds.

1.3.1.2 This manual implements the policies of the DOD equipment maintenance program, including the three level maintenance concept established by DOD Directive 4151.18. The NOMP is based on the three level maintenance concept and is the basic authority governing management of Organizational, Intermediate, and Depot level ordnance maintenance. The NOMP provides the management tools required for efficient and economic use of personnel and material resources in performing ordnance maintenance. This manual also provides the basis for establishing standard organizations, procedures, and responsibilities for the accomplishment of all maintenance on Naval ordnance associated material and weapons equipment. The division of maintenance into three levels allows:

a. Classification of ordnance maintenance functions by standardized levels.

b. Assignment of responsibility for ordnance maintenance functions to a specific level.

c. Assignment of ordnance maintenance tasks consistent with the complexity, depth, scope, and range of work to be performed.

d. Accomplishment of ordnance maintenance tasks or support service at that level which ensures optimum economic use of resources.

e. Collection, analysis, and use of data to assist all levels of ordnance management.

1.3.2 Maintenance Levels.

1.3.2.1 Organizational-level (O-level) Maintenance. Organizational level maintenance is normally performed by an operating unit on a day-to-day basis in support of its own operations. The O-level maintenance mission is to maintain ordnance as well as associated equipment in full mission-capable status. This work is usually accomplished by dedicated ordnance or assigned aircraft and shipboard personnel. In some instances, O-level maintenance may be performed by Intermediate or Depot level activities. Organizational level maintenance functions generally can be grouped under the following categories:

a. Loading and downloading of ordnance and stores aboard aircraft and combatants.

b. Reconfiguration and functional test of missile fire control systems, aircraft weapons release and control equipment, launchers, and gun systems.

c. Loading/downloading of mounted shipboard self-defense guns, launchers and decoy systems such as Close in Weapons Systems (CIWS), Rolling Airframe Missile (RAM), NATO Sea Sparrow Missile (NSSM), Nulka and lightweight torpedos.

d. Installation and removal of wings, fins, canards, bomb fuzes, arming wires, etc.

e. Aircraft and launcher interface checks.

f. Arming and de-arming.

g. Built in Test (BIT) checks.

h. Functions to ensure compliance with Notices of Ammunition Reclassification (NARs) and Technical Directives (TDs) as directed.

i. Inspection, servicing, maintenance and handling of ordnance support and armament handling equipment.

j. Equipment, scheduled, corrective and preventive maintenance.

k. Record keeping and report preparation and submission.

l. Compliance with NARs and TDs as appropriate.

m. Minor surface cleaning, paint touch-up, waxing torpedoes, etc.

n. Preventive maintenance as appropriate.

o. Aircraft interface checkout.

p. BIT checks for Vertical Launch Sytems (VLS) and aircraft.

1.3.2.2 Intermediate-level (I-level) Maintenance. Intermediate level maintenance is also referred to as the Intermediate Maintenance Activity (IMA), and is that maintenance which is the responsibility of, and performed by, designated maintenance activities supporting using organizations. This maintenance enhances and sustains the combat readiness and mission capability of supported activities by providing quality and timely material support, at the closest location with the lowest practical expenditure. Intermediate level maintenance is categorized to ensure particular ordnance maintenance functions are performed at that level which ensures optimum economic use of resources. Organizations performing I-level maintenance are referred to as IMA or Intermediate Level Maintenance Facility (ILMF). These facilities include Fleet Readiness Center (FRC) ashore and Aircraft Intermediate Maintenance Department (AIMD) afloat. Maintenance may also be authorized and designated to be performed by a Marine Corps Air Station (MCAS), Marine Aviation Logistics Squadron (MALS), Naval Weapons Stations, Navy Munitions Commands (NMC)/Detachment or shipboard weapons department. I-level maintenance functions can generally be grouped under the categories of:

a. Requisition, receipt, storage, assembly, delivery, and issuance of ordnance to using units.

b. Minor repair and corrosion control of ordnance, armament equipment and armament handling equipment.

c. Assembly, disassembly, inspection, testing of All-Up-Round (AUR), replacement of component parts, reprogramming, packaging, and unpackaging of ordnance to the extent specified in applicable maintenance instruction manuals, operating and service instruction manuals, or technical directives.

d. Stowage.

e. Compliance with NARs and TDs as directed.

f. Preventive maintenance as appropriate.

g. Performs limited repair on Aircraft Armament Equipment (AAE) or Armament Weapons Support Equipment (AWSE).

1.3.2.3 Depot-level (D-level) Maintenance. Depot level maintenance is performed at industrial establishments to ensure continued integrity of airframes, flight systems, and energetic components during subsequent operational service periods. Depot level maintenance is performed on ordnance, ordnance armament equipment, and armament handling equipment requiring major overhaul or a complete rebuild of parts. It includes assemblies, subassemblies, and end items, including manufacture of parts, modification, testing, and reclamation. D-level maintenance activities support lower categories of maintenance by providing technical assistance and performing maintenance which is beyond the capability of lower level maintenance activities, including, in some cases, supply support. It provides more extensive facilities for repair than lower level maintenance activities. Depot level maintenance establishments perform a variety of maintenance actions, the extent of which depends on the commodity requiring maintenance. The assigned Depot level activities are identified in their appropriate commodity chapters. Depot level maintenance actions can generally be grouped into the two categories of Supporting lower-level Maintenance, and Rework.

1.3.2.3.1 Depot Support of O-level and I-level Maintenance. The primary mission of Depot-level activities is to augment stocks of serviceable material and to support Organizational and Intermediate maintenance activities through the use of more extensive and specialized facilities and equipment. The maintenance actions performed by these activities can include the following functions:

a. Receipt, segregation, storage, and issue of ordnance, AUR air launched missiles, and individual missile components.

b. Test AUR missiles and replacement of component parts.

c. Assemble, disassemble, test, package, and unpackage ordnance to the extent specified in applicable maintenance instruction manuals, operating and service instruction manuals, or technical directives.

d. Perform scheduled and unscheduled maintenance actions necessary to maintain weapons test equipment, weapons handling equipment, and air launched missile containers.

e. Repair, test, modify, and check of designated test equipment.

f. Calibration of designated equipments.

g. Incorporate designated technical directives.

h. Perform authorized repair of weapon replaceable assemblies and shop replaceable assemblies.

i. Disposition of all weapon replaceable assemblies and shop replaceable assemblies to other industrial establishments which are beyond their maintenance capability.

j. Provide technical assistance and field teams to supported units when requested.

k. Compliance with NARs and TDs as appropriate.

1.3.2.3.2 Rework and Overhaul. Depot level maintenance also encompasses major overhaul or complete rebuild of parts of ordnance, ordnance armament equipment, and armament handling equipment. This includes assemblies, subassemblies, and end items. This includes manufacturing of parts, modifications, testing, and reclamation. Rework may be performed on ordnance, ordnance armament equipment, armament handling equipment, and aerial targets.

a. Rework and Overhaul functions restore designed service levels of performance, reliability, and material condition. They span complete rebuild through reclamation, refurbishment, overhaul, repair, replacement, adjustment, service, and replacement of system consumables. It also includes inspection, calibration, and testing.

b. Modification functions are those functions required to change or improve design levels of performance, reliability, and material condition. The term modification, as used in this manual, includes alteration, conversion, engineering change, modernizations, etc. These functions, normally performed by assigned Depot level activities, can be grouped under the following functions:

c. Overhaul and major repair of ordnance, sections, and certain related support equipment.

d. Incorporation of designated technical directives.

e. Assembly, disassembly, inspection, testing, reprogramming, packaging, and un-packaging of ordnance to the extent specified in applicable maintenance instruction manuals, operating and service instruction manuals, or technical directives.

f. Maintenance of test equipment.

g. Manufacture and modification of designated parts and kits.

h. Provide technical assistance and field teams to supported units when requested.

i. Modification of ordnance, sections, components, and certain related equipment.

j. Record keeping and reporting of maintenance performed at this level. Depot and Intermediate activities may have the capability to perform some lower level maintenance actions as defined above.

k. Remanufacture of components or assemblies when repair becomes unfeasible or uneconomical.

1.3.3 Maintenance Types.

1.3.3.1 There are two types of ordnance maintenance performed within the Naval establishment without distinction as to levels of maintenance. They are rework and upkeep.

1.3.3.2 Rework may be performed on ordnance, ordnance armament equipment, armament handling equipment, and aerial targets. It is performed by industrial type activities assigned the mission, task, or functional responsibility. Rework is providing maintenance program support

performed by military and civilian personnel and comprised of maintenance and modification functions.

a. Maintenance functions are those functions required to maintain or restore the inherent designed service levels of performance, reliability, and material condition; they span complete rebuild through reclamation, refurbishment, overhaul, repair, replacement, adjustment, servicing, and replacement of system consumables. It also includes inspection, calibration, and testing.

b. Modification functions are those functions required to change or improve design levels of performance, reliability, and material condition. The term modification, as used in this manual, includes alteration, conversion, engineering change, modernizations, etc.

1.3.3.3 Upkeep. The preventive, restorative, or additive work is performed on ordnance, ordnance equipment, armament handling equipment, weapons support equipment, Surface to Surface/Air Launchers, CIWS, Magazines and Ready Service Lockers, munitions handling equipment and aerial targets. It is normally performed by military activities that are responsible for the ordnance, associated equipment and facilities. The term applies to any method of processing Ordnance and associated equipment required to ensure the completion of standard operating periods or service tours, including but not limited to the servicing, periodic inspections, functional and bench test, replacement, preservation, modification, and repair. An upkeep process extends from the time some of the work is started until all the work is completed, including temporary interruptions in direct labor; it also includes upkeep, evaluation, test, and correction of discrepancies determined thereby. Upkeep is divided into two categories, standard and special.

a. Standard Upkeep. The periodic or scheduled work performed on ordnance, ordnance equipment, armament handling equipment, weapons support equipment, Surface to Surface/Air Launchers, CIWS, Magazines and Ready Service Lockers, munitions handling equipment and aerial targets after (and as a result of) completion of a prescribed number of flying hours, operating hours, or calendar days per prescribed inspection or replacement requirements and such that the end product requirement of the work includes the capability of aircraft or equipment to serve a full prescribed period of flying hours, operating hours, or calendar days before undergoing upkeep again.

b. Special Upkeep. The work done to ordnance, ordnance equipment, armament handling equipment, weapons support equipment, Surface to Surface/Air Launchers, CIWS, Magazines and Ready Service Lockers, munitions handling equipment and aerial targets to improve, change, or restore their capability to perform specific missions or functions by replacement, removal, addition, alteration, or repair of parts/equipment/aircraft, without particular regard to flying hours, operating hours, calendar days, or operating periods. Special upkeep includes, but is not limited to, modification, repair, and unscheduled inspection, replacement, or test.

1.3.3.4 Preventive maintenance is performed on ordnance, ordnance equipment, armament handling equipment, weapons support equipment, Surface to Surface/Air Launchers, CIWS, Magazines and Ready Service Lockers, munitions handling equipment and aerial targets . It is normally performed by military activities that are responsible for the ordnance, associated equipment and facilities.

CHAPTER 1.4

Organization for Naval Ordnance Maintenance

Table of Contents

Paragraph	Subject	Page
1.4.1	General	1-4-1
1.4.2	Command of Combatant Forces	1-4-1
1.4.3	Operational Command of Combatant Forces	1-4-1
1.4.4	Administrative Control of Combatant Forces	1-4-4
1.4.5	Command Structure	1-4-4
1.4.6	Operating Forces of the Navy	1-4-7
1.4.7	Dual Chains of Command	1-4-7
1.4.8	Operational Organization	1-4-8
1.4.9	Administrative Organization	1-4-8
1.4.10	Organization of Fleet Staffs	1-4-8
1.4.11	Operational Task Organization	1-4-9
1.4.12	Operational Staffs	1-4-9
1.4.13	Operational Commanders	1-4-9
1.4.14	Commander, U.S. Fleet Forces Command	1-4-9
1.4.15	Commander, Naval Surface Force, U.S. Atlantic Fleet	1-4-10
1.4.16	Commander, Naval Air Force, U.S. Atlantic Fleet	1-4-10
1.4.17	Commander, Marine Forces Command	1-4-10
1.4.18	Commander, Submarine Force, U.S. Atlantic Fleet	1-4-10
1.4.19	Commander Second Fleet	1-4-10
1.4.20	Commander, U.S. Pacific Fleet	1-4-13

Table of Contents - cont.

Paragraph	Subject	Page
1.4.21	Commander, Naval Surface Force	1-4-13
1.4.22	Commander, Naval Air Force, U.S. Pacific Fleet	1-4-13
1.4.23	Commander, Fleet Marine Forces Command	1-4-13
1.4.24	Commander, Submarine Force, U.S. Pacific Fleet	1-4-13
1.4.25	Commander, Third Fleet	1-4-13
1.4.26	Commander, Fourth Fleet	1-4-16
1.4.27	Commander, Fifth Fleet	1-4-16
1.4.28	Commander, Seventh Fleet	1-4-16
1.4.29	Commander, U.S. Naval Forces, Europe	1-4-16
1.4.30	Commander, Middle East Force	1-4-16
1.4.31	Commander, Sixth Fleet	1-4-16
1.4.32	Commander, Naval Reserve Force	1-4-20
1.4.33	Commander, Naval Air Reserve Force	1-4-20
1.4.34	Naval Air Facilities	1-4-20
1.4.35	Naval Air Reserve Units	1-4-20
1.4.36	Commander, Fleet Logistic Support Wing	1-4-20
1.4.37	Commander, Reserve Patrol Wing	1-4-20
1.4.38	Commander, Carrier Air Wing Reserve, Twenty	1-4-20
1.4.39	Commander, Helicopter Wing Reserve	1-4-20
1.4.40	Commander, Naval Surface Reserve Force	1-4-22
1.4.41	Naval Reserve Readiness Command Regions	1-4-22
1.4.42	Navy Cargo Handling and Port Group	1-4-22
1.4.43	Inshore Undersea Warfare	1-4-22
1.4.44	Naval Reserve Intelligence Program	1-4-22
1.4.45	Shore Establishment	1-4-22
1.4.46	Commander, Naval Air Systems Command	1-4-24
1.4.47	Commander, Naval Sea Systems Command	1-4-24

Table of Contents - cont.

Paragraph	Subject	Page
1.4.48	Commander, Naval Supply Systems Command	1-4-27
1.4.49	Naval Ordnance Safety and Security Activity	1-4-29
1.4.50	Naval Warfare Centers	1-4-29
1.4.51	Naval Air Warfare Center Weapons Division	1-4-30
1.4.52	Naval Surface Warfare Center Dahlgren, VA	1-4-30
1.4.53	Naval Ordnance Test Unit Cape Canaveral, FL	1-4-31
1.4.54	Defense Contract Management Agency	1-4-31
1.4.55	Raytheon Technical Services Company Indianapolis, IN	1-4-31
1.4.56	Naval Air Warfare Center Aircraft Division, Patuxent River, MD	1-4-31
1.4.57	Naval Safety Center	1-4-31
1.4.58	Commander, Naval Air Systems Command	1-4-31
1.4.59	Fleet Readiness Centers	1-4-31
1.4.60	Naval Air Technical Data and Engineering Command	1-4-33
1.4.61	Naval Weapons Stations	1-4-33
1.4.62	Naval Surface Warfare Center Division, Crane, IN	1-4-33
1.4.63	Fleet and Industrial Supply Centers	1-4-33
1.4.64	Naval Undersea Warfare Center, Keyport Division, WA	1-4-33
1.4.65	Naval Magazines	1-4-33
1.4.66	Naval Operational Logistics Support Center, Mechanicsburg, PA	1-4-33
1.4.67	Navy Weapons Ordnance Assessment	1-4-34
1.4.68	Naval Surface Warfare Center Indian Head Division	1-4-34
1.4.69	Naval Surface Warfare Center Panama City Division	1-4-34
1.4.70	Naval Undersea Warfare Center Newport Division	1-4-34
1.4.71	Naval Ordnance Maintenance Units	1-4-34
1.4.72	Commander, Military Sealift Command	1-4-34
1.4.73	Commander, Operational Test and Evaluation Force	1-4-35
1.4.74	Commander, Fleet Activities/Naval Activities	1-4-35

List of Illustrations

Figure	Title	Page
1-4-1	Chain of Command	1-4-2
1-4-2	Operational Chain of Command of the Operational Forces	1-4-3
1-4-3	Administrative Chain of Command of the Operational Forces	1-4-5
1-4-4	Organization of the Department of the Navy	1-4-6
1-4-5	Organizational Relationships of Operating Forces Type Commands Reporting to COMUSFLTFORCOM	1-4-11
1-4-6	Organizational Relationships of Operating Forces Reporting to COMSECONDFLT	1-4-12
1-4-7	Organizational Relationships of Operating Forces Type Commands Reporting to COMPACFLT	1-4-14
1-4-8	Organizational Relationships of Operating Forces Reporting to COMTHIRDFLT	1-4-15
1-4-9	Organizational Relationships of Operating Forces Reporting to COMSEVENTHFLT	1-4-17
1-4-10	Organizational Relationships of Operating Forces Reporting to COMUSNAVEUR	1-4-18
1-4-11	Organizational Relationships of Operating Forces Reporting to COMSIXTHFLT	1-4-19
1-4-12	Organizational Structure of Naval Reserve	1-4-21
1-4-13	Organizational Relationships of System Commands under CNO	1-4-23
1-4-14	Organizational Relationships of Support Activities under COMNAVAIRSYSCOM	1-4-25
1-4-15	Organizational Relationships of Support Activities under COMNAVAIRSEASYSCOM	1-4-26
1-4-16	Organizational Relationships of Support Activities under COMNAVSUPSYSCOM	1-4-28
1-4-17	Airborne Expendable Countermeasures Organizational and Integrated Product Teams	1-4-32
1-4-18	N411 Ordnance ILS Weapons and Targets Overview	1-4-36

CHAPTER 1.4

Organization for Naval Ordnance Maintenance

1.4.1 General. This chapter is intended to provide a working understanding of the Navy organization and to serve as a reference source document as opposed to an authoritative source for organizational matters. This chapter depicts the Navy command organization concerned with the operation, maintenance, and rework of ordnance, systems, equipment, and capabilities. This chapter portrays the chain of command to the shore establishment and the dual lines of authority to the operating forces. No attempt was made to depict all activities of the Navy and Marine Corps. To do so would necessitate an extremely bulky document that would require frequent changes. Instead, the organizational structure is depicted in a manner that will permit most users of this document to identify the individual chains of command.

1.4.2 Command of Combatant Forces. The Secretary of Defense (SECDEF) exercises responsibility over the military departments by means of two lines of control. One chain of command runs from the President to the SECDEF through the Joint Chiefs of Staff (JCS) to the Commanders of unified and specified combatant commands made up of operational forces from any or all of the three military departments. The other chain of command runs from the President to the SECDEF to the secretaries of the military departments and through service channels to the individual commands. The chain of command through the Commanders of unified and specified commands to the operation forces involves the operational command of these forces and is properly referred to as the operational chain of command. The chain of command through the service secretaries embraces the training and readiness of military forces and their administration and support. This chain is referred to as the administrative chain of command. The operational and administrative chain of command is illustrated in Figure 1-4-1.

1.4.3 Operational Command of Combatant Forces. With some exceptions, the operating forces of all the services are assigned for operational command to the unified and specified combatant commands. A unified command has a broad continuing mission under a single Commander and is composed of significant assigned components of two or more services. A specified command has a broad continuing mission and is normally composed of forces from but one service. Commanders of unified or specified commands are responsible to the President and the SECDEF for the accomplishment of military missions assigned to them. Orders to these Commanders are issued by the President or the SECDEF or by the JCS with authority and direction from the SECDEF. These Commanders have operational command over the forces assigned to them. Thus, in operational matters, the chiefs of the individual services have no direct operational authority over the forces of their services that are under the command of the Commanders of the unified and specified commands. A service chief's voice in operational matters is a function of his role as a member of the JCS who provides strategic direction and guidance to the Commanders of unified and specified commands. The operational chain of command is illustrated in Figure 1-4-2.

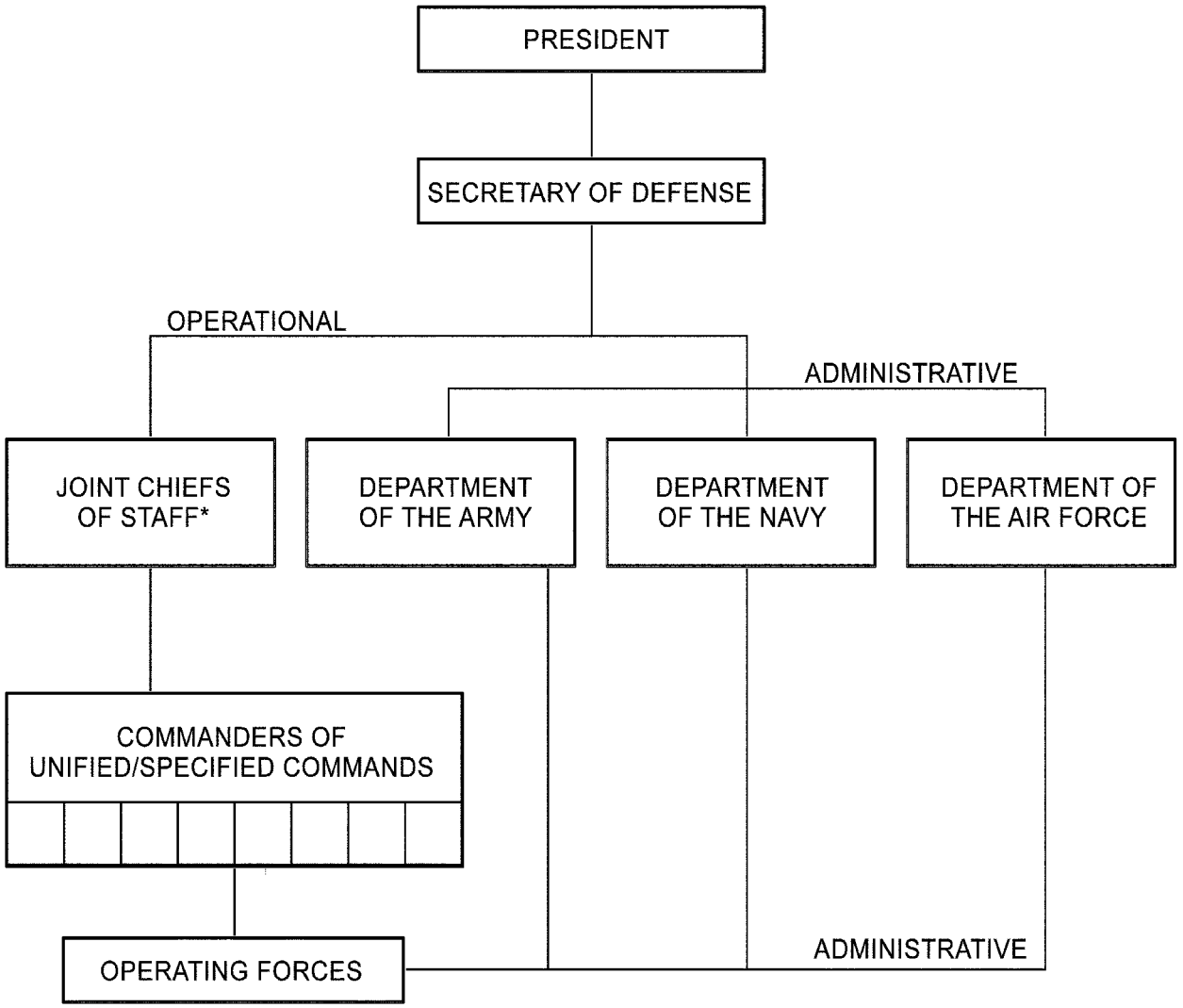

NOTE:

*THE JOINT CHIEFS OF STAFF, CONSISTING OF THE CHAIRMAN; THE CHIEF OF STAFF, U.S. ARMY; THE CHIEF OF NAVAL OPERATIONS; THE CHIEF OF STAFF, U.S. AIR FORCE; AND THE COMMANDANT OF THE MARINE CORPS; AND SUPPORTED BY THE ORGANIZATION OF THE JOINT CHIEFS OF STAFF, ARE THE PRINCIPAL MILITARY ADVISERS TO THE PRESIDENT, THE NATIONAL SECURITY COUNCIL, AND THE SECRETARY OF DEFENSE. IN PERFORMANCE OF THEIR FUNCTIONS OF ADVISING THE SECRETARY OF DEFENSE, AND SUBJECT TO THE AUTHORITY AND DIRECTION OF THE PRESIDENT AND THE SECRETARY OF DEFENSE, IT IS THE DUTY OF THE JOINT CHIEFS OF STAFF TO SERVE AS ADVISERS AND AS MILITARY STAFF IN THE CHAIN OF OPERATIONAL COMMAND WITH RESPECT TO UNIFIED AND SPECIFIED COMMANDS, AND TO COORDINATE ALL COMMUNICATIONS FROM THE PRESIDENT AND SECRETARY OF DEFENSE TO UNIFIED AND SPECIFIED COMMANDS, AND TO COORDINATE ALL COMMUNICATIONS IN MATTERS OF JOINT INTEREST ADDRESSED TO THE COMMANDERS OF THE UNIFIED OR SPECIFIED COMMANDS BY OTHER AUTHORITY.

Figure 1-4-1. Chain of Command

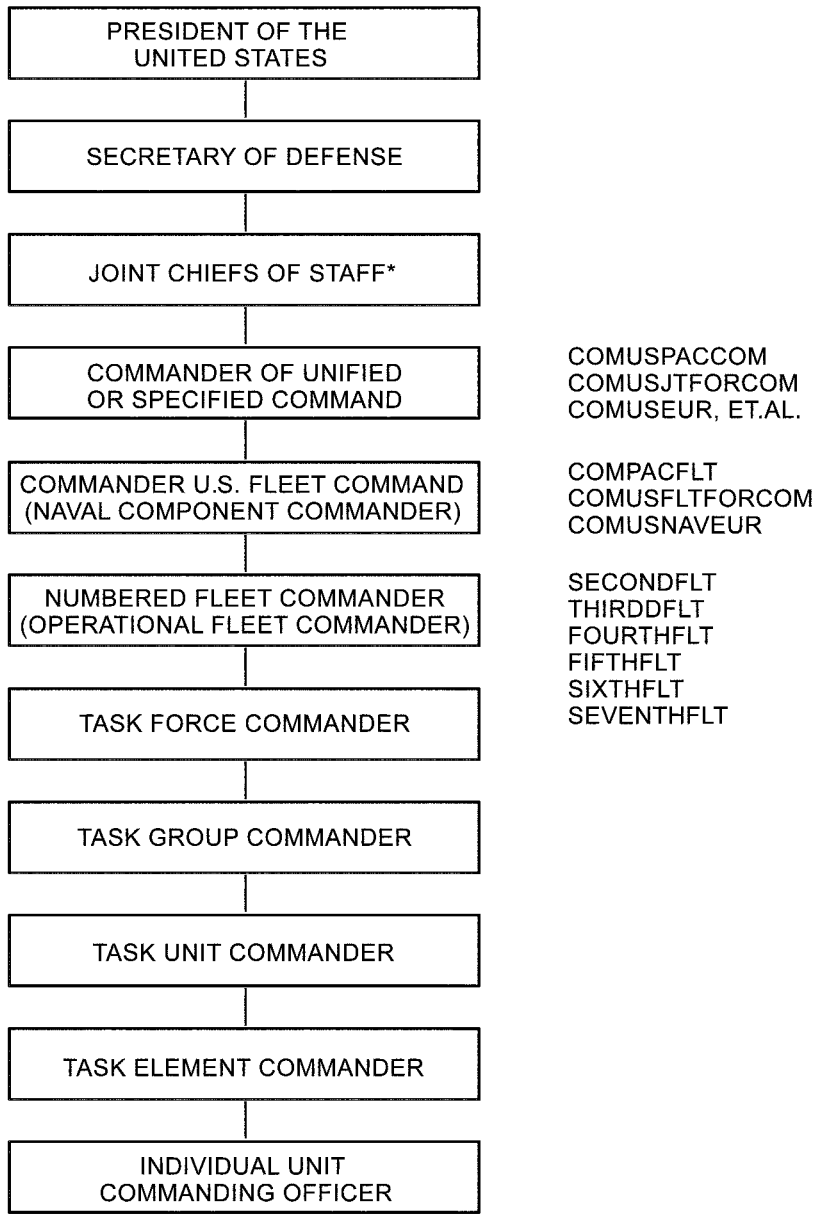

NOTE:

*THE JCS ARE IN THE OPERATIONAL CHAIN OF COMMAND AS ADVISERS AND AS MILITARY STAFF WITH RESPECT TO THE UNIFIED AND SPECIFIED COMMANDS; HOWEVER, THE JCS DO NOT EXERCISE OPERATIONAL COMMAND OR CONTROL OF FORCES, EXCEPT AS DIRECTED BY THE PRESIDENT OR SECRETARY OF DEFENSE.

Figure 1-4-2. Operational Chain of Command of the Operational Forces

1.4.4 Administrative Control of Combatant Forces. Unified and specified combatant commands are established by the authority of the President. Once established, the military departments are charged with the responsibility to assign forces to those commands. Each military department retains responsibility for the administration of forces assigned to the combatant commands. Title 10, U.S. Code assigns responsibility to the Chief of Naval Operations (CNO), under the direction of the Secretary of the Navy (SECNAV), to determine the personnel and the material requirements of Navy operating forces, including the order in which ships, aircraft, surface craft, weapons, and facilities are to be constructed, maintained, altered, repaired, and overhauled. Additionally, the CNO coordinates and directs the efforts of the bureaus and offices of the executive part of the Department of the Navy as may be necessary to make available and distribute, when and where needed, the personnel and material required. Each military department has a responsibility to organize, train, and equip forces for the service's combat role. The service chiefs exercise these responsibilities through their administrative chains of command to the operating forces. The administrative chain of command is illustrated in Figure 1-4-3.

1.4.5 Command Structure.

1.4.5.1 The SECNAV is head of the Department of the Navy (DON). Under the direction, authority, and control of SECDEF, SECNAV is responsible for the policies and control of the DON, including its organization, administration, operation, and efficiency. The civilian executive assistants to the SECNAV are the Under Secretary of the Navy, the Assistant Secretaries of the Navy, the General Counsel of the Navy, and the Deputy Under Secretary of the Navy. It is the Secretary's policy to assign department wide responsibilities essential to the efficient administration of the DON to and among the civilian executive assistants. Each civilian executive assistant, within the assigned area of responsibility, is the principal adviser and assistant to the Secretary on the administration of the affairs of the DON. In carrying out these duties, the civilian executive assistants do so in harmony with the statutory position of the CNO and the Commandant of the Marine Corps (CMC) as set forth in Navy regulations. Each is authorized and directed to act for the Secretary within their assigned area of responsibility. The National Security Act of 1947, as amended, governs the missions and responsibilities of the DON and provides for a secretariat. The Navy Department was established by the Act of 30 April 1978. The organization of the Department of the Navy is illustrated in Figure 1-4-4.

1.4.5.2 The CNO is the principal executive official of the office of the CNO which is a component of the executive part of the DON. CNO takes precedence over all other officers of the Navy service in the performance of his duties within the DON. The CNO is the Navy member of the JCS and is responsible, in coordination with CMC, for keeping the SECNAV fully informed on matters considered or acted upon by the JCS. As a member of the JCS, CNO is responsible to the President and the SECDEF for duties external to the DON as prescribed by law. Interim to the administration of the DON, the CNO commands the operating forces of the Navy (consistent with the operational command vested in the commanders of unified or specified combatant commands), which includes the several Fleets, seagoing forces, district forces, Fleet marine forces and other assigned Marine Corps forces, the Military Sealift Command, and other forces and activities as may be assigned by the President or the SECNAV. The CNO is responsible to the SECNAV for the utilization of resources and the operating efficiency of all assigned commands and activities.

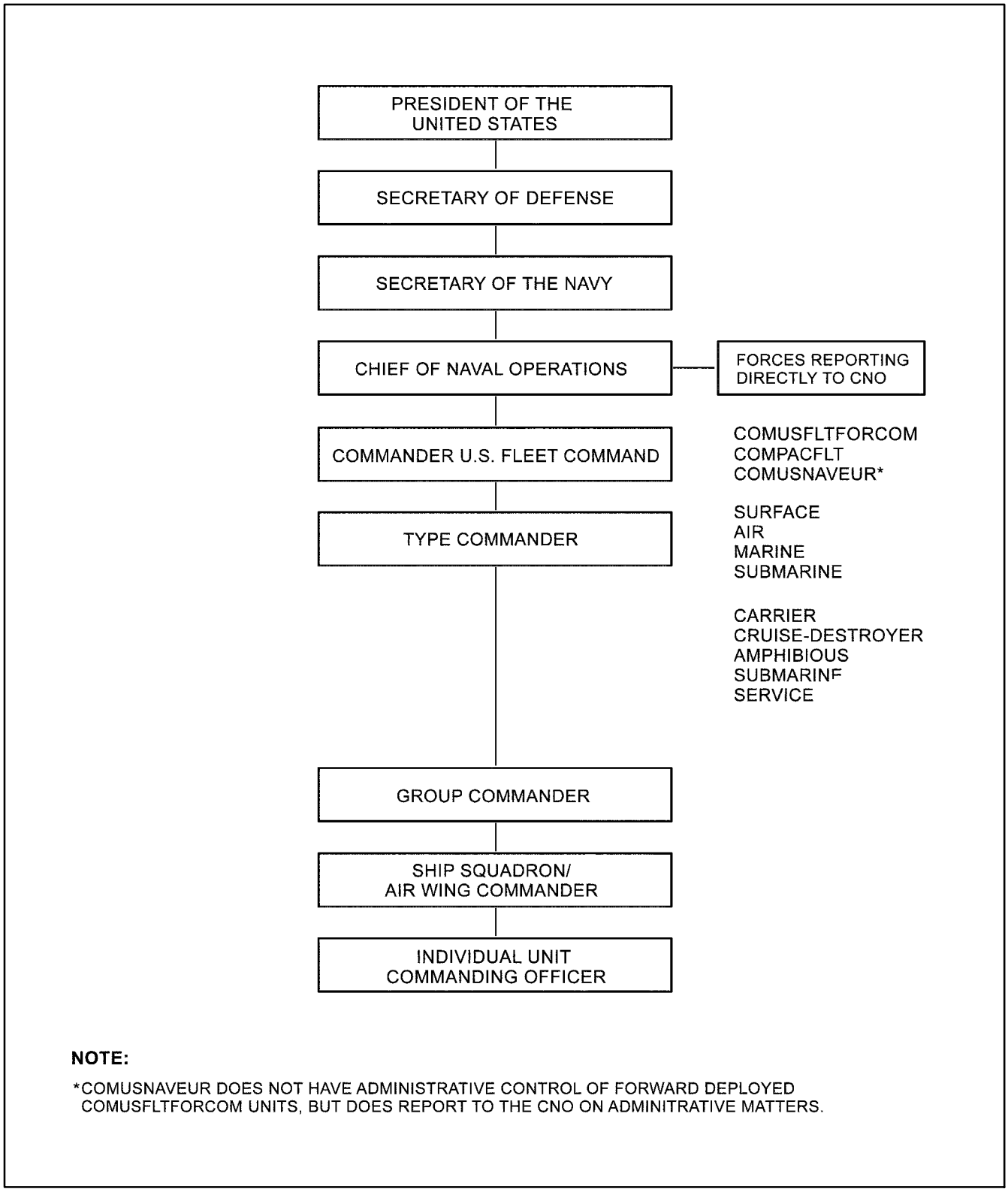

Figure 1-4-3. Administrative Chain of Command of the Operational Forces

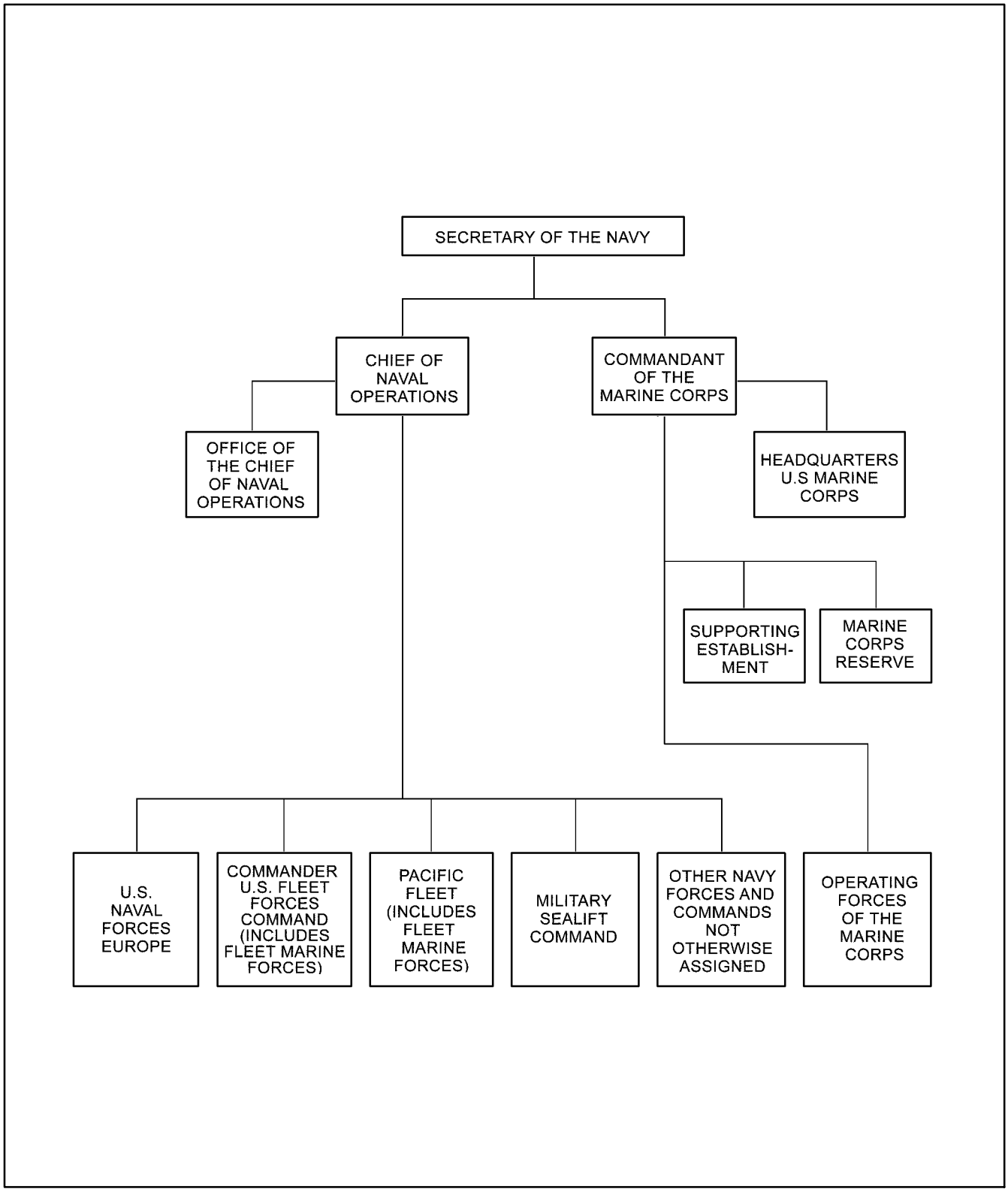

Figure 1-4-4. Organization of the Department of the Navy

The CMC commands the Marine Corps and is directly responsible to SECNAV for the administration, discipline, internal organization, training requirements, efficiency, and readiness of the Marine Corps; for the operation of its material support system and for the total performance of the Marine Corps. The CMC is the Marine Corps member of the JCS and is responsible for keeping the SECNAV fully informed on matters considered or acted upon by the JCS. In this capacity, as a member of the JCS, CMC is responsible to the President and the SECDEF for duties external to the Department of the Navy as prescribed by law. The CMC is directly responsible to the CNO for the organization, training, and readiness of those elements of the operating forces of the Marine Corps assigned to the operating forces of the Navy. Such Marine Corps forces, when so assigned, are subject to the command exercised by the CNO over the operating forces of the Navy. Likewise, members or organizations of the Navy, when assigned to the Marine Corps, are subject to the command of the CMC.

1.4.6 Operating Forces of the Navy. The operating forces of the Navy are combat or combat-support-oriented. Combatant forces and certain supporting forces are assigned for duty under the commander of a unified or specified command. The operating forces of the Navy include:

1.4.6.1 Major commands afloat, operating directly under the command of the CNO.

1.4.6.1.1 The Military Sealift Command.

1.4.6.1.2 The composition of both Pacific and Atlantic Fleets, including the forces and commands by type, the titles of which are self-explanatory:

a. Fleet Marine Forces.

b. Naval Air Forces.

c. Naval Surface Forces.

d. Submarine Forces.

1.4.6.1.3 Shore activities assigned to the operating forces. The operating forces of the Navy set forth in subsequent paragraphs consist of the Fleets, seagoing forces, the Military Sealift Command, and such shore activities of the Navy and other forces and activities as may be assigned by the President or the SECNAV. The operating forces are responsible for Naval operations necessary to carry out the department's role in upholding and advancing the national policies and interests of the United States. The administrative military organization of the operating forces, headed by the CNO, represents a continuous chain of command from the CNO to a succession of lower echelons. It must be understood that the operating forces are organized in permanent fashion in the administrative chain of command, while the operational chain of command is task oriented and can be structured as necessary to meet operational requirements.

1.4.7 Dual Chains of Command. Title 10, U.S. Code authorizes the President to establish unified and specified combatant commands to perform military missions. The military departments are directed by this code to assign forces to those combatant commands. The forces so assigned are under the operational command of the Commander of the unified and specified command. The Commanders of the unified and specified commands are responsible to the President and the SECDEF for the military missions assigned. However, each military department retains responsibility for the administration of forces assigned to those commands. In order

to provide for administrative control by the military department and operational command by the Commanders of unified and specified commands, parallel chains of command to the operating forces are required. The Commander of the unified or specified command, utilizing the operational chain of command, exercises operational command of assigned Navy forces. The CNO, utilizing the administrative chain of command, exercises administrative control of all Navy forces. While it may appear to be duplicative, the existence of a parallel Fleet command structure is actually an efficient and effective method of differentiating these two necessary functions. In general, these separate organizations are separate in name only, are dual hatted, and are manned by the same personnel, although exceptions do exist. The administrative organization is permanent in nature and supports, with forces and staff personnel, the task oriented operational organization. Since the functions of the two separate organizations must be responsive to both the CNO and the unified Commander, the separate functions must be differentiated.

1.4.8 Operational Organization. Command of the operating forces of the Fleet at all echelons is exercised through the operational organization. The Department of the Navy, through its administrative organization, organizes, trains, and equips forces, which are then employed operationally in the unified command structures. The operational chain of command begins with the President and the SECDEF as national command authorities and continues down through the individual Commanding Officers of ships, squadrons, and submarines as illustrated in Figure 1-4-2.

1.4.9 Administrative Organization. To carry out the Department of the Navy's responsibilities for providing ready forces (organized, trained, and equipped) to the combatant commanders, the operating forces of the Navy are administratively organized to develop Fleet readiness. As stated in Navy Regulations, Fleet readiness is one of the two major objectives (force modernization being the other) of the Department of the Navy. Fleet readiness consists of:

a. Personnel readiness, including the quantitative aspect of meeting total manning requirements and the qualitative aspect of providing the necessary skills for operations and maintenance.

b. Material readiness, which encompasses the required maintenance and logistic support for effective operations.

c. Training readiness, which requires sufficient operating time in terms of steaming days and flying hours and sufficient participation in exercises to ensure a capable and proficient military force.

The administrative chain of command of the Navy operating forces begins with the President and the SECDEF and continues through the SECNAV to the individual unit Commanding Officers of the ships, squadrons, and submarines as illustrated in Figure 1-4-3.

1.4.10 Organization of Fleet Staffs. In the administrative chain of command, Fleet staffs are organized for the purpose of developing Fleet readiness in specific terms of personnel, material, and training readiness.

1.4.10.1 Ashore Staffs. The Fleet Commanders and Type Commanders and their staffs are based ashore. These staffs are structured primarily to perform functions in support of the maximization of readiness. Their composition is not constrained by the space limitations that apply to afloat staffs; consequently, the shore based staffs are assigned the major portion of

responsibility for readiness support. The location of the headquarters and staffs must be at a base concentration of Fleet activity to ensure the necessary accessibility for the close association required.

1.4.10.2 Afloat Staffs. Group and Squadron Commander staffs are considered afloat commands. Surface Group Commander staffs are normally embarked in one of the ships of their command. Group and squadron commander staffs are structured to monitor, develop, and support all three aspects of Fleet readiness. These staffs must be sized to accomplish their operational responsibilities in the operational chain of command. In those instances where shipboard limitations preclude accommodation of an entire afloat staff, certain personnel can be left ashore or aboard other ships as dictated by the nature of the operation.

1.4.11 Operational Task Organization. Fleet Commanders and numbered Fleet Commanders have geographically-oriented responsibilities and are permanently organized and assigned to a unified (theater) command. Below the numbered Fleet staff level, the operational chain of command is task-oriented. Organizational assignments in the operational chain of command are not permanently constituted. The task organization is predicated on the mission by a war plan or an operational plan of a Commander of a unified command, and is further delineated by the Fleet Commanders (Naval Component Commander) and the numbered Fleet Commander. The task organization must be explicitly set forth by the operation order or operation plan. Changes in the task organization may occur with changes in forces assigned to the task group, geographic area of operation, military task, or tactical situation.

1.4.12 Operational Staffs. Task organization Commanders and staffs are created as required by appropriate operation plans and orders. Personnel are assigned on an additional duty basis from: (1) existing administrative staff organization; (2) commands within the task organization; and (3) where special skills or large numbers of personnel are required by augmentees on additional duty from outside the task organization. The operational Commander and his staff may be embarked in a seagoing unit of the task organization which would provide the requisite command, control, and communication facilities. When adequate or suitable facilities are not available afloat, the operational staff may be located ashore if the peculiar command, control, and communications requirements for the level of command can thereby be better provided. Operational Commanders may also be located ashore to facilitate command of land-based forces.

1.4.13 Operational Commanders. Task forces are normally constituted for the purpose of conducting broad Naval warfare missions such as establishing Naval superiority, conducting general strike operations, or seizing territory ashore, or any combination of the functions of the sea control mission. The titles of task forces reflect the broad nature of their tasking (for example, maritime surveillance and reconnaissance force, amphibious force mobile logistics support force, etc.). Task groups, units, and elements normally have progressively narrower operational missions.

1.4.14 Commander, U.S. Fleet Forces Command. The Commander, U.S. Fleet Forces Command (USFF) in peacetime, limited war, and general war, conducts operations to ensure control of the sea and air in the Atlantic Command area (which includes portions of the Atlantic, Pacific and Arctic Oceans, and the Caribbean Sea). USFF also provides combat-ready U.S. Naval forces (including administrative, logistics, and planning support thereto) to the Atlantic Command and other commands as directed in order to defend the United States against attack

through the Atlantic Ocean or Caribbean Sea. USFF also maintains the security of the Atlantic Command and supports the operations of adjacent allied and national Commanders. The organizational relationships of operating force Type Commanders (TYCOMs) under USFF are illustrated in Figure 1-4-5.

1.4.15 Commander, Naval Surface Force, U.S. Atlantic Fleet. The Commander, Naval Surface Force, U.S. Atlantic Fleet, under COMNAVSURFLANT, maintains combat readiness of assigned Atlantic and European theater Naval surface forces. The COMNAVSURFLANT develops and evaluates surface warfare and logistics doctrine, operational procedures, tactics and equipment and assigns ready forces and logistics support to the operational control of other Commanders as directed. The COMNAVSURFLANT exercises operational and administrative control of assigned forces in order to support the objectives of the Atlantic Fleet in peace, limited war, or general war. The organizational relationships of operating force TYCOMs under COMUSFLTFORCOM are illustrated in Figure 1-4-5.

1.4.16 Commander, Naval Air Force, U.S. Atlantic Fleet. The Commander, Naval Air Force, U.S. Atlantic Fleet, under COMUSFLTFORCOM, organizes, trains, equips, prepares and maintains the readiness of and plans the employment in peace and war of forces assigned. The Commander, Naval Air Force, U.S. Atlantic Fleet also provides administrative personnel, material, fiscal, and technological support to those forces in order to most effectively and efficiently support the mission of the U.S. Atlantic Fleet. The organizational relationship of operating force TYCOMs under COMUSFLTFORCOM is illustrated in Figure 1-4-5.

1.4.17 Commander, Marine Forces Command. The Commander, Fleet Marine Forces, Atlantic, under COMMARFORCOM, conducts type training and supports intertype training and material readiness for the conduct of assault operations and the seizure of advanced bases or other types of expeditionary duty. The organizational relationship of operating force TYCOMs under COMMARFORCOM is illustrated in Figure 1-4-5.

1.4.18 Commander, Submarine Force, U.S. Atlantic Fleet. The Commander, Submarine Force, U.S. Atlantic Fleet, under COMUSFLTFORCOM, conducts submarine operations in support of COMUSFLTFORCOM to ensure control of the sea in the Atlantic command area. The Commander, Submarine Force, U.S. Atlantic Fleet also provides combat-ready submarine forces to conduct offensive warfare (including antisubmarine warfare), defensive warfare, and other assigned tasks. This responsibility includes training, logistics, and planning support to other Atlantic commands as directed in order to support the objective of the U.S. Atlantic Fleet in peace, limited war, or general war. The organizational relationship of operating force TYCOMs under COMUSFLTFORCOM is illustrated in Figure 1-4-5.

1.4.19 Commander Second Fleet. The Commander, Second Fleet, under COMUSFLTFORCOM, plans for, and when directed, conducts battle force operations in the Atlantic command in support of designated unified or allied Commanders. The Commander, Second Fleet directs movements and exercises operational control of assigned units to carry out scheduled ocean transits and other special operations as directed by COMUSFLTFORCOM in order to maximize Fleet operational readiness to respond to contingencies in the Atlantic command area of operations. The Commander, Second Fleet also plans Fleet intertype training exercises and participates in joint and combined exercises as directed. The organizational relationship of operating forces reporting to the Commander, Second Fleet is illustrated in Figure 1-4-6.

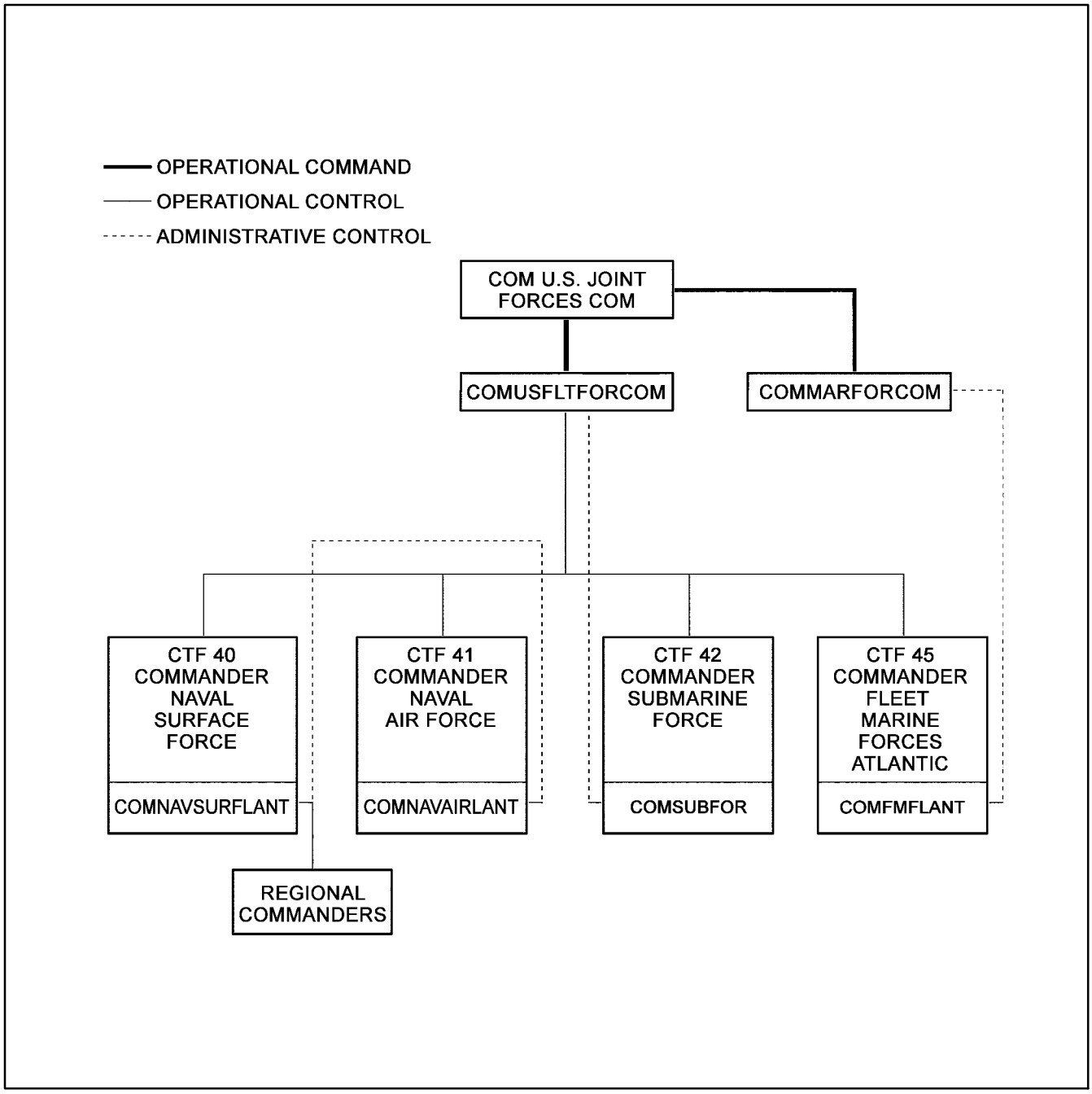

Figure 1-4-5. Organizational Relationships of Operating Forces Type Commands Reporting to COMUSFLTFORCOM

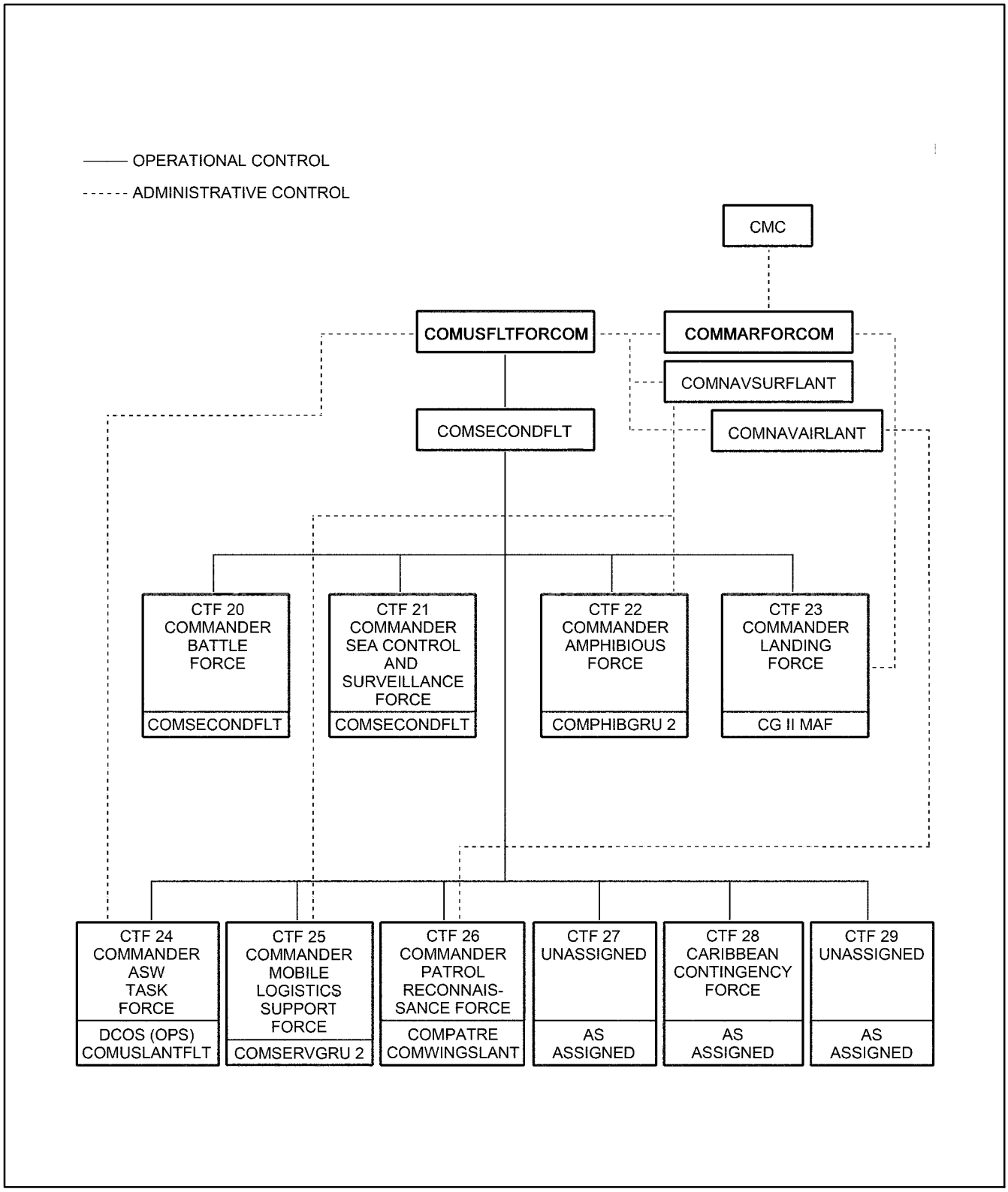

Figure 1-4-6. Organizational Relationships of Operating Forces Reporting to COMSECONDFLT

1.4.20 Commander, U.S. Pacific Fleet. The Commander, U.S. Pacific Fleet (COMPACFLT), in peacetime, limited war, and general war, conducts operations to ensure control of the sea and air in the Pacific command area, which includes portions of the Pacific, Atlantic, Arctic, and Indian Oceans and the Bering Sea. COMPACFLT also provides combat-ready U.S. Naval forces (including administrative, logistics, and planning support thereto) to the Pacific command and other commands as directed in order to defend the United States against attack through the Pacific area, to maintain the security of the Pacific command, and to support the operations of adjacent allied and national Commanders. The organizational relationship of operating force TYCOMs under COMPACFLT is illustrated in Figure 1-4-7.

1.4.21 Commander, Naval Surface Force. The Commander, Naval Surface Force, under COMNAVSURFOR, commands assigned cruiser-destroyer, amphibious, auxiliary and special warfare forces, and shore activities. The Commander, Naval Surface Force, exercises operational control of such forces not assigned to other Commanders as COMNAVSURFOR may direct. The Commander, Naval Surface Force, also maintains all ships, special forces, and staffs of the force in an optimum state of training, readiness, discipline, and morale in order to maintain the maximum degree of readiness for war. The organizational relationship of operating force TYCOMs under COMPACFLT are illustrated in Figure 1-4-7.

1.4.22 Commander, Naval Air Force, U.S. Pacific Fleet. The Commander, Naval Air Force, U.S. Pacific Fleet, under COMUSPACFLT, commands assigned aviation squadrons, aircraft carriers, and shore activities. The Commander, Naval Air Force, U.S. Pacific Fleet exercises operational control of such forces not assigned to other Commanders as COMPACFLT may direct. The Commander, Naval Air Force, U.S. Pacific Fleet also maintains all aircraft, ships, shore activities, and staffs of the force in an optimum state of training, readiness, discipline, and morale in order to maintain the maximum degree of readiness for war. The organizational relationship of operating force TYCOMs under COMPACFLT are illustrated in Figure 1-4-7.

1.4.23 Commander, Fleet Marine Forces Command. The Commander, Fleet Marine Forces Command under COMUSPACFLT, conducts type training and supports intertype training and material readiness for the conduct of assault operations, the seizure of advanced bases or other types of expeditionary duty. The organizational relationship of operating force TYCOMs under COMUSPACFLT are illustrated in Figure 1-4-7.

1.4.24 Commander, Submarine Force, U.S. Pacific Fleet. The Commander, Submarine Force, U.S. Pacific Fleet, under COMSUBPACFLT, commands assigned attack and ballistic missile submarines, ships, and ashore activities. The Commander, Submarine Force, Pacific Fleet maintains all submarines, ships, and shore activities and staffs of the force in an optimum state of training, readiness, discipline, and morale in order to maintain the maximum degree of readiness for war. The organizational relationship of operating force TYCOMs under COMSUBPACFLT are illustrated in Figure 1-4-7.

1.4.25 Commander, Third Fleet. The Commander, Third Fleet, under COMUSPACFLT, exercises operational control over assigned ships, aircraft, and submarines. The Commander, Third Fleet also plans, conducts, and evaluates Fleet training (including combined, joint, and intertype) and tactical development exercises and conducts operations to ensure control of the sea in order to defend the United States against attack through the eastern Pacific Ocean and the Bering Sea. In addition, the Commander, Third Fleet maintains the security of the Pacific command and supports the operations of adjacent allied and national Commanders. The organizational relationship of operating forces reporting to the Commander, Third Fleet are illustrated in Figure 1-4-8.

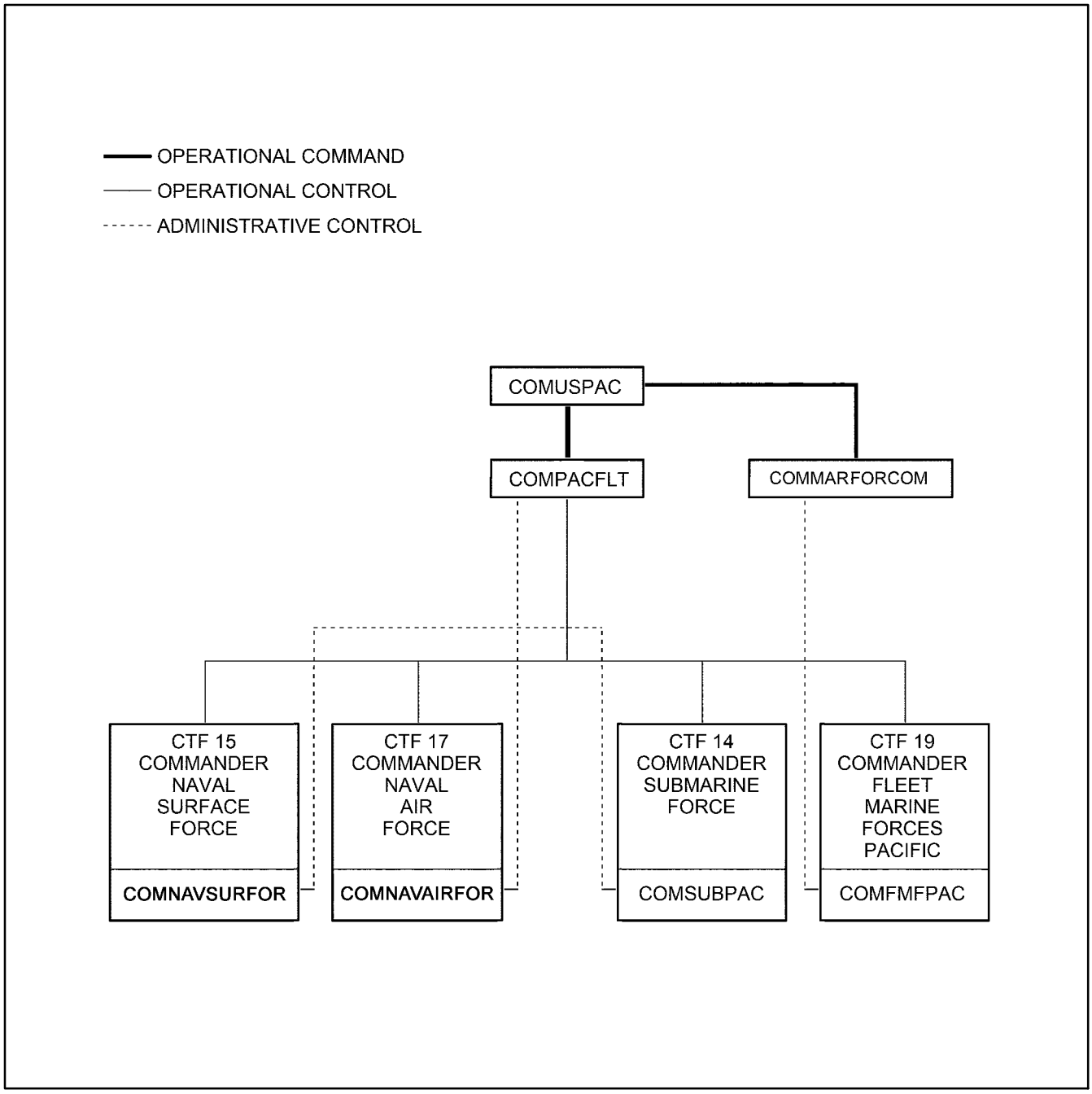

Figure 1-4-7. Organizational Relationships of Operating Forces Type Commands Reporting to COMPACFLT

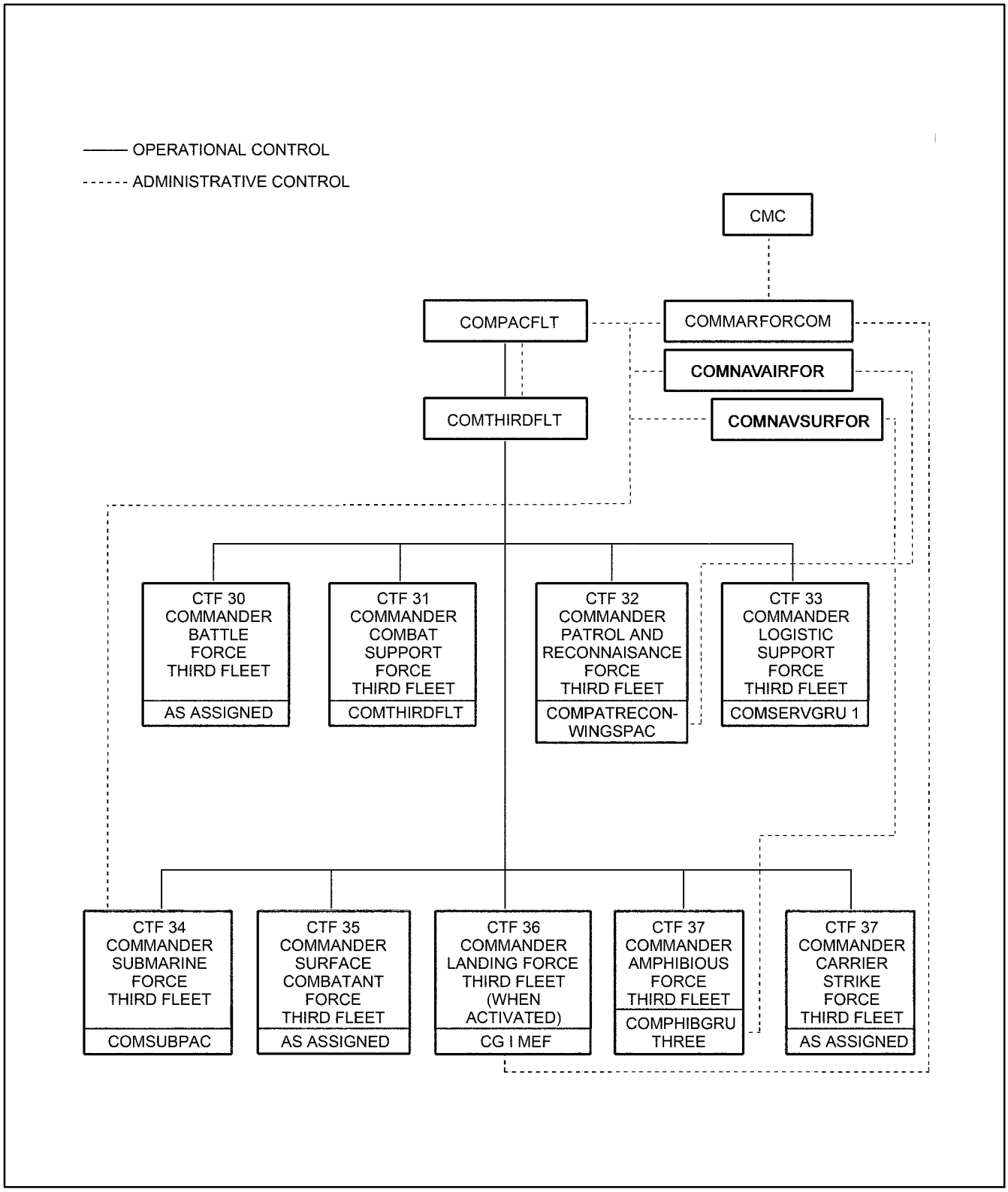

Figure 1-4-8. Organizational Relationships of Operating Forces Reporting to COMTHIRDFLT

1.4.26 Commander, Fourth Fleet. The Fourth Fleet was first established in 1943 to protect the South Atlantic Ocean from raids during World War II, then deactivated it in 1950. With the reactivation of the Fourth Fleet in July 2008, The Commander, Fourth Fleet, under COMUSNAVSO will be responsible for U.S. Navy ships, aircraft and submarines operating in the U.S. Southern Command (SOUTHCOM) area of focus, which encompasses the Caribbean, and Central and South America and the surrounding waters. Its mission is to direct U.S. Naval forces operating in the Caribbean, Central and South American regions and interact with partner nation navies within the maritime environment. Various operations include counter-illicit trafficking, Theater Security Cooperation, military-to-military interaction and bilateral and multinational training.

1.4.27 Commander, Fifth Fleet. The Commander, U.S. Fifth Fleet (COMFIFTHFLT) is subordinate to, and an additional duty of Commander, U.S. Naval Forces Central Command (COMUSNAVCENT) who reports directly to Commander U.S. Central Command (COMCENTCOM) for operational matters, and to the Chief of Naval Operations (CNO) for administrative related matters. The Central Command theater, resides within 25 countries and 7.5 million square miles of Europe, Asia and Africa. Naval forces are forward deployed to this region and have been so since the end of World War II. Naval forces in the region are rotationally deployed from either Pacific Fleet or Atlantic Fleet. Operationally, they are assigned as units of the U.S. Fifth Fleet, which was recommissioned July 1, 1995.

1.4.28 Commander, Seventh Fleet. The Commander, Seventh Fleet, under COMPACFLT, exercises operational control over assigned ships, aircraft, and submarines and plans and conducts Fleet training (including combined, joint, and intertype) exercises. The Commander, Seventh Fleet conducts operations to ensure control of the sea in order to defend the United States against attack through the western Pacific and Indian Oceans. The Commander, Seventh Fleet also maintains the security of the Pacific command and supports the operations of adjacent allied and national Commanders. The organizational relationship of operating forces reporting to the Commander, Seventh Fleet are illustrated in Figure 1-4-9.

1.4.29 Commander, U.S. Naval Forces, Europe. The Commander U.S. Naval Forces, Europe (COMUSNAVEUR) plans, conducts, and supports, when directed, Naval operations in the European theater and Middle East area during peacetime, contingencies, and general war to perform tasks assigned by the Commander, U.S. European Command. The organizational relationship of operating forces under COMUSNAVEUR are illustrated in Figures 1-4-10 and 1-4-11.

1.4.30 Commander, Middle East Force. The Commander, Middle East Force conducts Naval operations during peacetime to represent U.S. interests in the Red Sea, Persian Gulf, and northwestern Indian Ocean area during contingencies and general war and performs tasks assigned by COMUSNAVEUR. The organizational relationship of operational forces reporting to COMUSNAVEUR are illustrated in Figures 1-4-10 and 1-4-11.

1.4.31 Commander, Sixth Fleet. The Commander, Sixth Fleet, under COMUSNAVEUR, plans for and conducts offensive or defensive Naval combat operations when directed by COMUSNAVEUR or other competent authority in order to establish and maintain control of the waters of, and air space over, the Mediterranean Sea, approaches thereto, adjacent inland areas, and the Black Sea. The Commander, Sixth Fleet plans and conducts contingency operations including evacuation of U.S. citizens; protects U.S. interests when directed by higher authority;

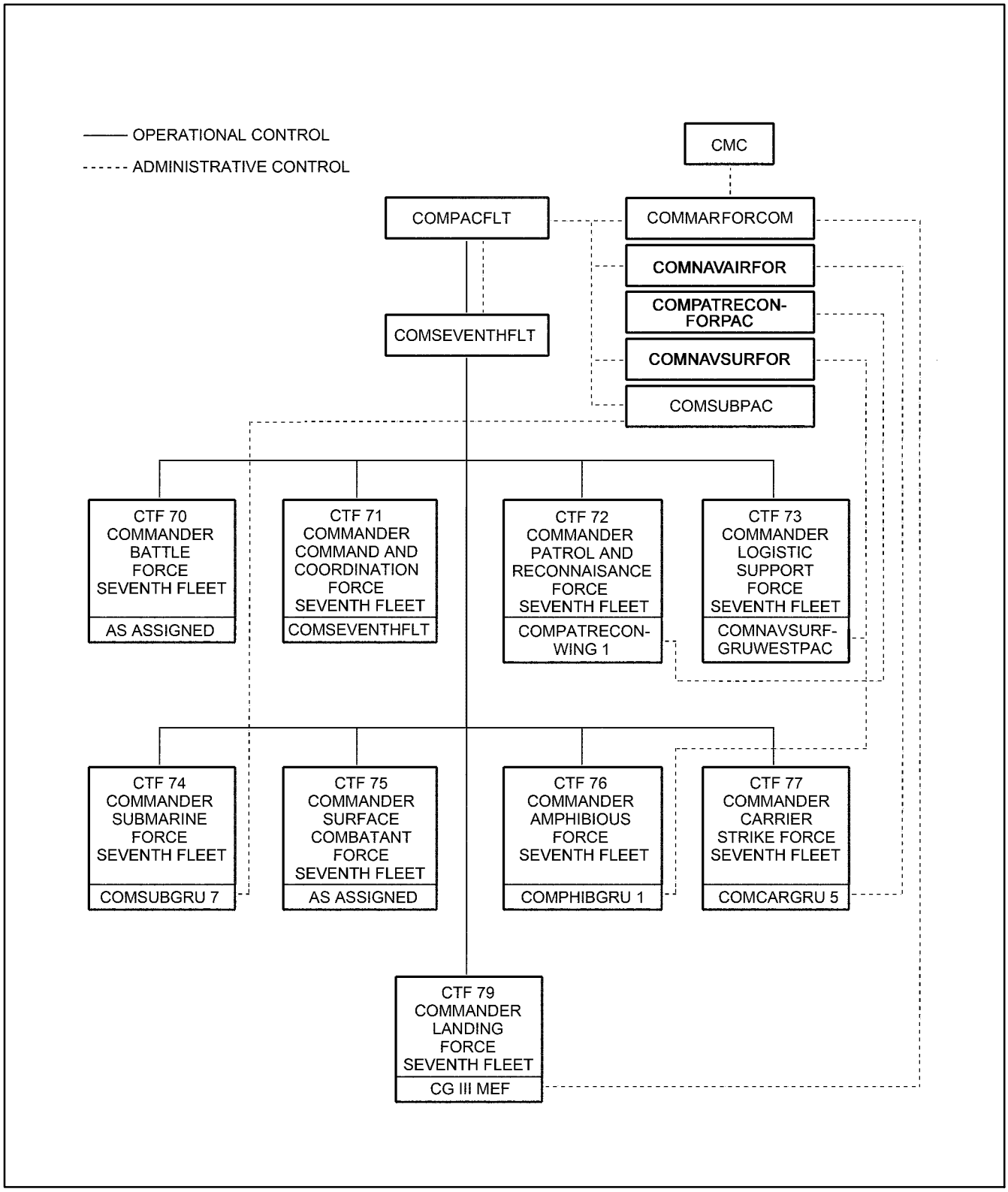

Figure 1-4-9. Organizational Relationships of Operating Forces Reporting to COMSEVENTHFLT

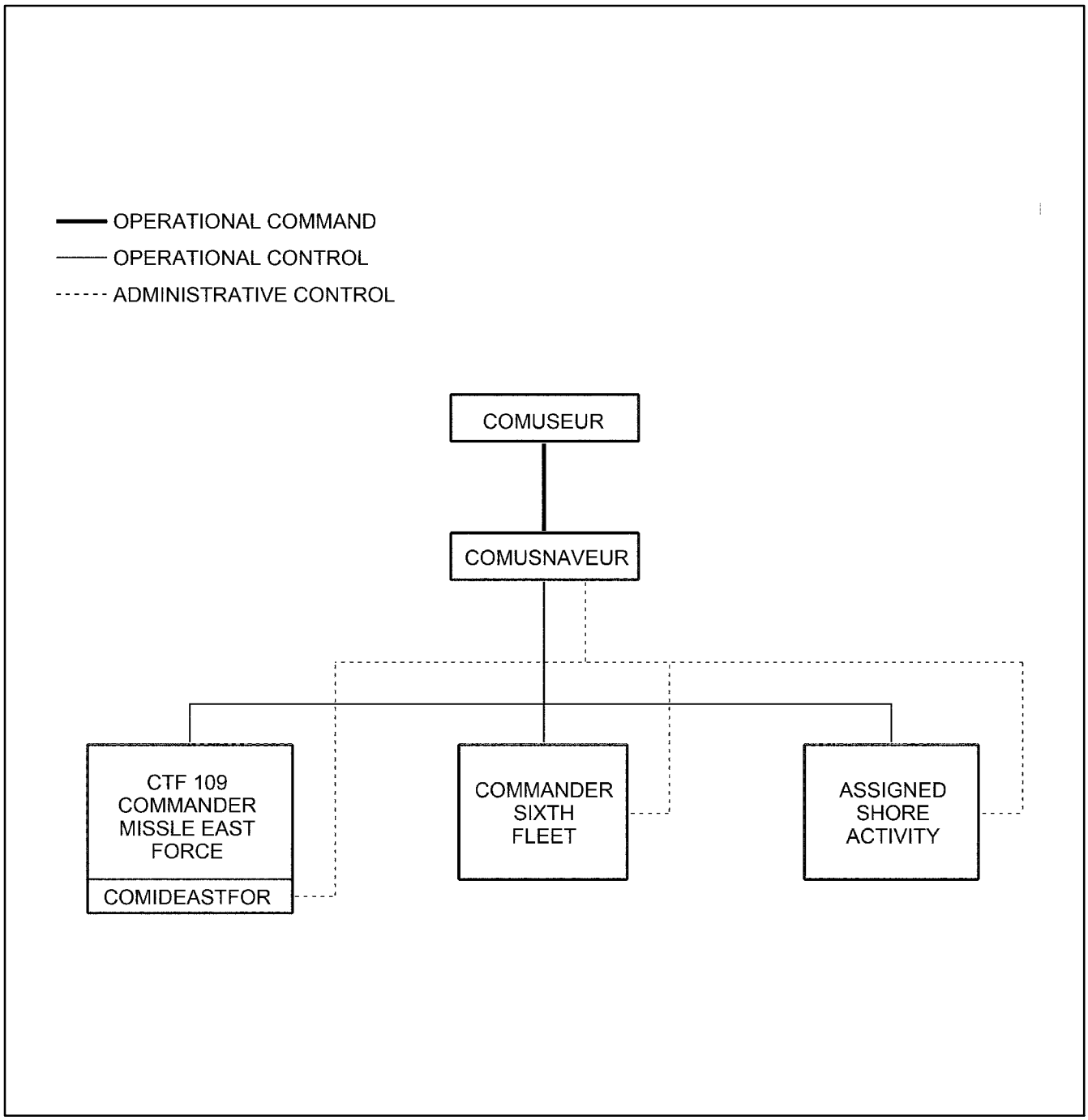

Figure 1-4-10. Organizational Relationships of Operating Forces Reporting to COMUSNAVEUR

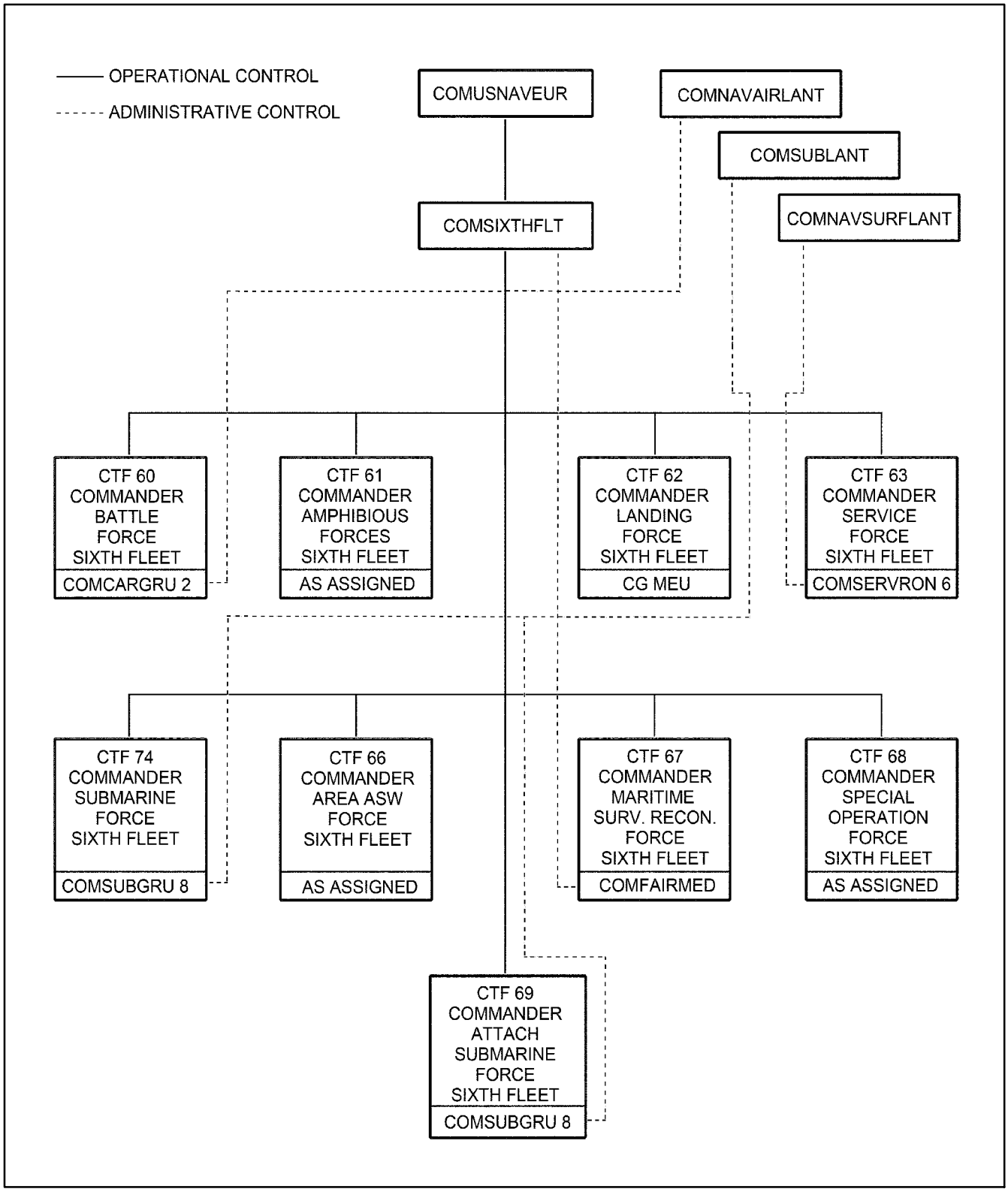

Figure 1-4-11. Organizational Relationships of Operating Forces Reporting to COMSIXTHFLT

provides a U.S. Navy presence in the Mediterranean area in support of U.S. Navy overseas diplomacy objectives and U.S. foreign policy; and carries out training operations to maintain Fleet readiness to carry out wartime, contingency, and peacetime responsibilities. The organizational relationships of operating forces reporting to COMUSNAVEUR are illustrated in Figures 1-4-10 and 1-4-11.

1.4.32 Commander, Naval Reserve Force. The Commander, Naval Reserve Force (COMNAVRESFOR) administers the Naval Reserve Program, including management of Naval reserve resources; and performs such other functions or tasks as may be directed by CNO. The organizational relationship of shore activities under COMNAVRESFOR are illustrated in Figure 1-4-12.

1.4.33 Commander, Naval Air Reserve Force. The Commander, Naval Air Force Reserve (COMNAVAIRFORES) commands the Naval Air Force Reserve in peacetime so as to maintain the assigned personnel and aircraft in a state of training, readiness, and availability which will permit rapid deployment in the event of full or partial mobilization.

1.4.34 Naval Air Facilities. The Commanding Officers of Naval Air Facilities, under COMNAVAIRFORES, command assigned selected reserve units and direct their prescribed programs to assure mobilization readiness; act as field managers for assigned resources; and provide required support to COMNAVRESFORES staffs and squadrons.

1.4.35 Naval Air Reserve Units. The Commanding Officers of Naval Air Reserve Units, under COMNAVAIRESFORES, command assigned selected reserve units and direct their prescribed programs to assure mobilization readiness; act as field managers for assigned resources; and provide required support to COMNAVRESFORES staffs and squadrons.

1.4.36 Commander, Fleet Logistic Support Wing. The Commander, Fleet Logistic Support Wing, under COMNAVAIRESFORES, directs and coordinates the operations and training of assigned squadrons to achieve and sustain a level of readiness and provides logistics support to Fleet Commanders upon mobilization. In peace time, squadrons perform all of the Navy's Continental United States air logistics support including overseas deployments of short durations.

1.4.37 Commander, Reserve Patrol Wing. The Commander, Reserve Patrol Wing, under COMNAVAIRFORES, supervises the administration, logistics, and training (including procedures relating to operations as well as maintenance) of all Atlantic and Pacific Fleet shore-based reserve antisubmarine aviation units to ensure the combat readiness of those units, permitting rapid deployment in the event of full or partial mobilization.

1.4.38 Commander, Carrier Air Wing Reserve, Twenty. The Commander, Carrier Air Wing Reserve, Twenty, under COMNAVAIRFORES, supervises the administration, logistics, and training (including procedures relating to operations as well as maintenance) of assigned squadrons to sustain a level of personnel and equipment readiness which will ensure the combat readiness of those units, permitting rapid deployment in the event of full or partial mobilization.

1.4.39 Commander, Helicopter Wing Reserve. The Commander, Helicopter Wing Reserve, under COMNAVAIRESFORES, directs, supervises, and coordinates the training of assigned squadrons and detachment personnel to maintain the maximum combat readiness level which will ensure the rapid deployment of the helicopter wing or individual squadrons in the event of full or partial mobilization.

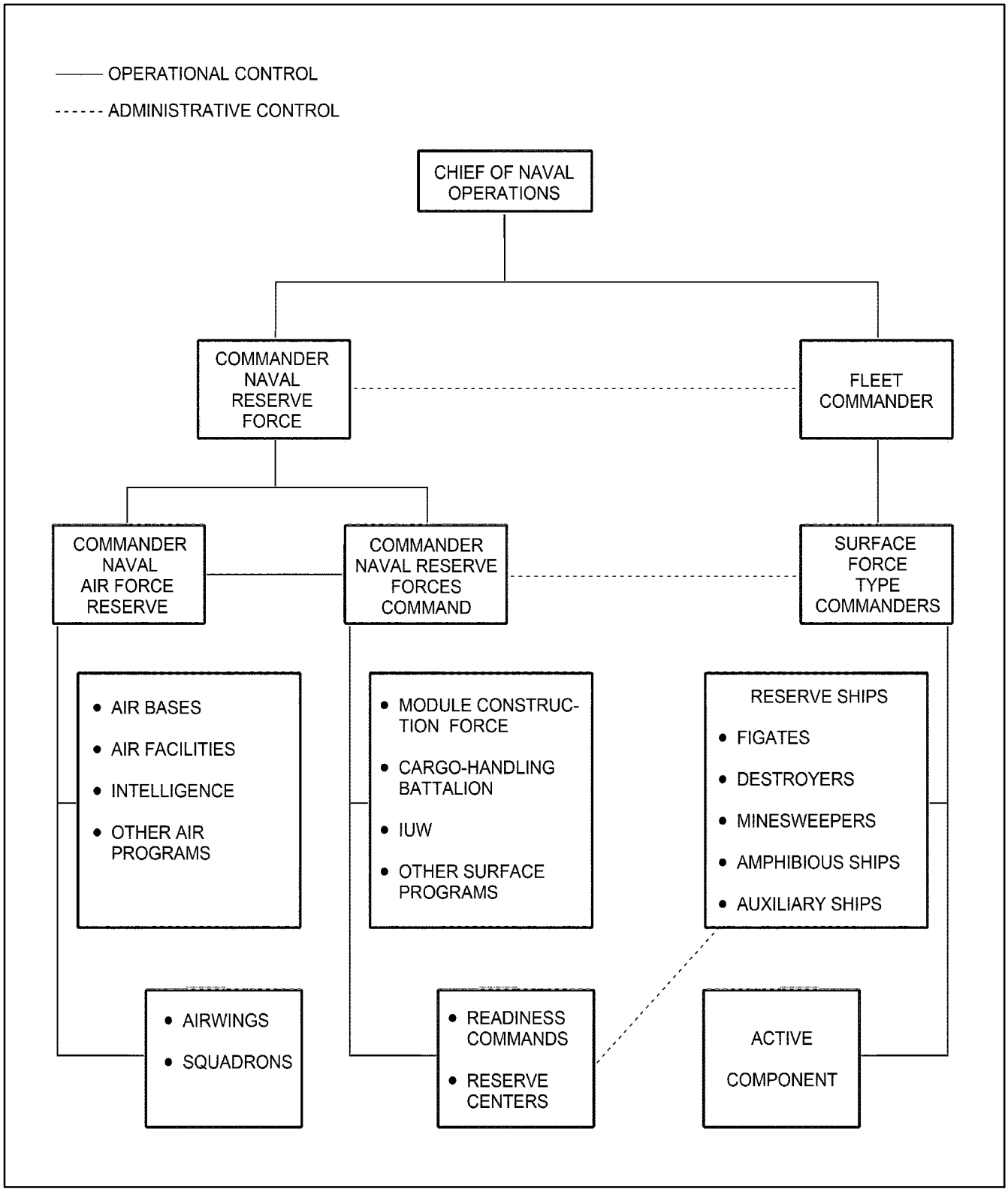

Figure 1-4-12. Organizational Structure of Naval Reserve

1.4.40 Commander, Naval Surface Reserve Force.

1.4.40.1 The Commander, Naval Reserve Forces Command (COMNAVRESFORCOM), under COMNAVRESFOR, commands the Naval surface reserve force in peacetime so as to maintain assigned reserve personnel to reserve ships and reserve personnel in a state of training, readiness, and availability which will permit rapid deployment in the event of full or partial mobilization. A unique relationship between Naval reserve ship, readiness region Commanders and reserve centers is depicted by the dotted lines in Figure 1-4-12. Although Commanding Officers of Naval reserve ships shoulder the responsibility for the training and retention of selected reserve augment crews assigned to their ships, reserve centers supporting the ship's home port must provide selected reserve crew manning. Appropriate readiness region commanders coordinate their manning efforts.

1.4.40.2 The relationship between COMNAVRESFOR and the two Fleet Commanders is illustrated by a dotted line in Figure 1-4-12, COMNAVRESFOR to both COMUSFLTFORCOM and COMPACFLT on an additional duty basis.

1.4.40.3 Operational and administrative control of Naval reserve ships is exercised by the Atlantic and Pacific Fleet commanders. These ships are manned by active duty and selected reserve personnel.

1.4.41 Naval Reserve Readiness Command Regions. The Commander of Naval Reserve Readiness Command Regions, under COMNAVSURFRESFOR, commands assigned Naval reserve units and directs their prescribed programs to assure mobilization readiness, and acts as a field manager for assigned resources.

1.4.42 Navy Cargo Handling and Port Group. The Navy Cargo Handling and Port Group, under COMUSFLTFORCOM, has the primary mission of providing cargo handling training to all Navy cargo handling force personnel as well as Marine Corps and Fleet personnel. The secondary mission is to offload a Maritime Prepositioning Ship squadron in a contingency.

1.4.43 Inshore Undersea Warfare. The inshore undersea warfare and their mobile inshore undersea warfare units, under COMNAVRESFORCOM, provide surface and subsurface surveillance for protection of amphibious objective areas, harbors and approaches, roadsteads, straits, anchorages, offshore economic assets, and other military significant inshore areas throughout the world.

1.4.44 Naval Reserve Intelligence Program. The Naval Reserve Intelligence Program provides a mobilization ready intelligence capability to the active forces. These units are closely tied to active intelligence forces and provide nearly one third of Fleet intelligence center output.

1.4.45 Shore Establishment. The shore establishment is comprised of shore activities with defined missions approved for establishment by the SECNAV. The function of the shore establishment is to supply, maintain, and support the operating forces through the furnishing of required materials, services, and personnel. Command relationships and the exercise of command and support responsibilities for Navy and Marine Corps shore activities are contained in SECNAVINST 5400.14A and are not affected by this manual. The organizational relationship of system commands under CNO are illustrated in Figure 1-4-13.

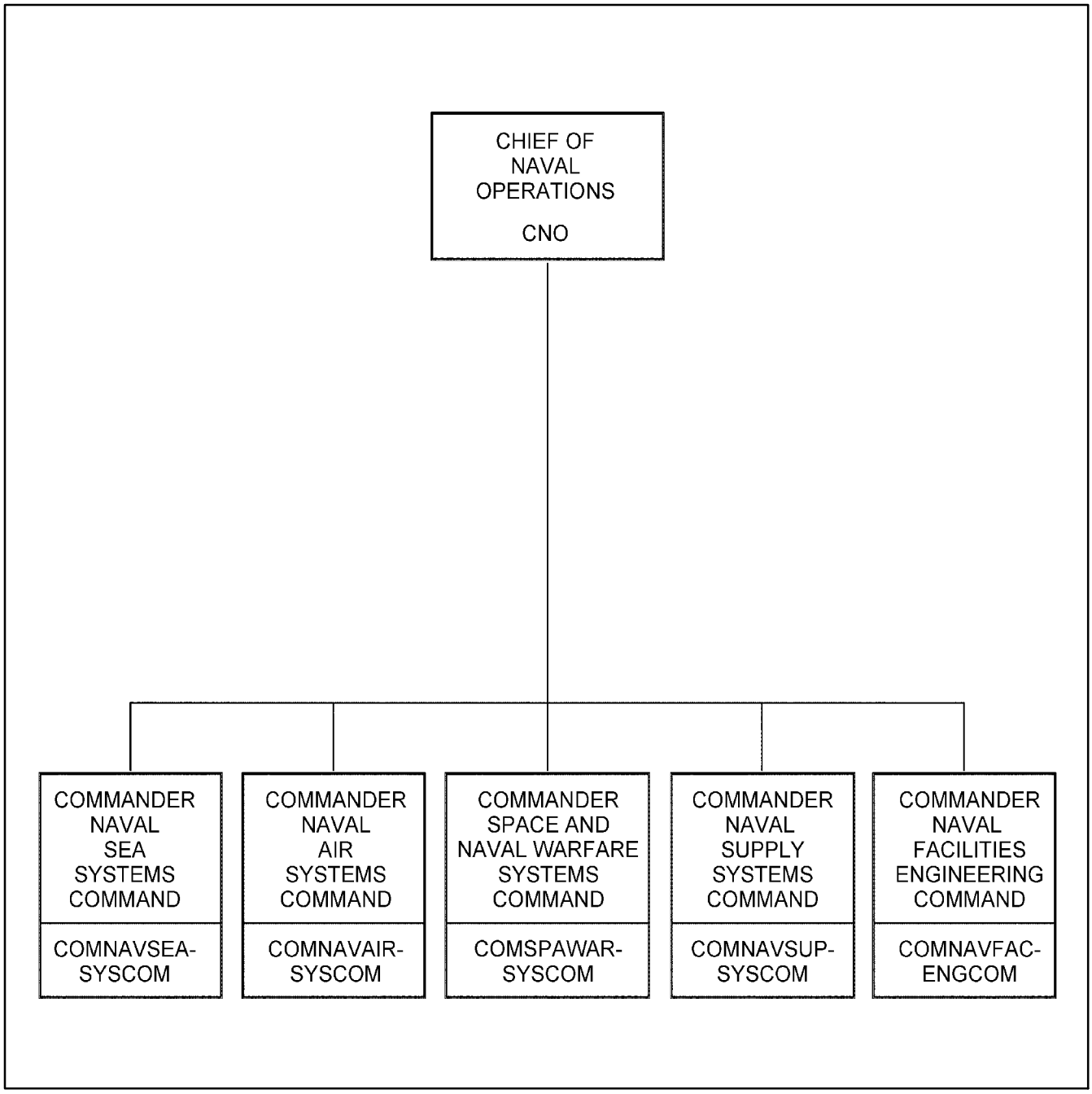

Figure 1-4-13. Organizational Relationships of System Commands under CNO

1.4.46 Commander, Naval Air Systems Command. The Commander, Naval Air Systems Command (COMNAVAIRSYSCOM) is responsible for the research, design, development, test, acquisition, ordnance assessment, and logistics support for all aviation procurements relating to Navy and Marine Corps aircraft, ordnance, aerial targets and other aviation related equipment, and associated material. In addition, COMNAVAIRSYSCOM is responsible for mission planning, facility requirements development, workload planning, internal organization and procedures, budgeting, funding, accounting, staffing, and the utilization of personnel, funds, materials, and facilities. The organizational relationship of support activities under COMNAVAIRSYSCOM are illustrated in Figure 1-4-14. COMNAVAIRSYSCOM, under the direction of CNO, is the coordinating authority for the NOMP. COMNAVAIRSYSCOM, as coordinating authority, is responsible to:

a. Provide ordnance maintenance policy guidance, procedures, technical direction, and management review of the program at each level of maintenance (Organizational, Intermediate, Depot).

b. Provide technical direction for the manufacture, modification, repair, overhaul, material effectiveness, disposition and salvage of ordnance and associated material and equipment.

c. Provide ordnance maintenance processing documents in sufficient scope and depth to clearly delineate the maintenance functions and organizations responsible for performing them.

d. Assist in the development of an effective training program for military and civilian personnel in the ordnance community.

e. Provide ordnance maintenance material allowance lists.

f. Direct the maintenance data system.

g. Recommend procedural changes, methods, and technical guidance to affect continuing improvement in the NOMP.

h. Provide technical direction and a centralized system for the control and issuance of all technical directives concerning ordnance and associated material.

i. Maintain inventory management control of ordnance, major air launched missile components and All-Up-Rounds.

1.4.47 Commander, Naval Sea Systems Command. Commander, Naval Sea Systems Command (COMNAVSEASYSCOM) and its Program Executive Offices (PEOs) are responsible for the research, development, procurement, logistics support, and other material functions relating to whole ships and craft, shipboard weapon systems, and ordnance. COMNAVSEASYSCOM is also responsible for ship system integration and for coordination of logistics support for ships as a whole. The organizational relationships of support activities under COMNAVSEASYSCOM are listed in Figure 1-4-15. In the execution of these activities COMNAVSEASYSCOM is responsible for:

a. Providing technical direction for the manufacture, modification, repair, overhaul, material effectiveness, disposition and salvage of ordnance and associated material and equipment.

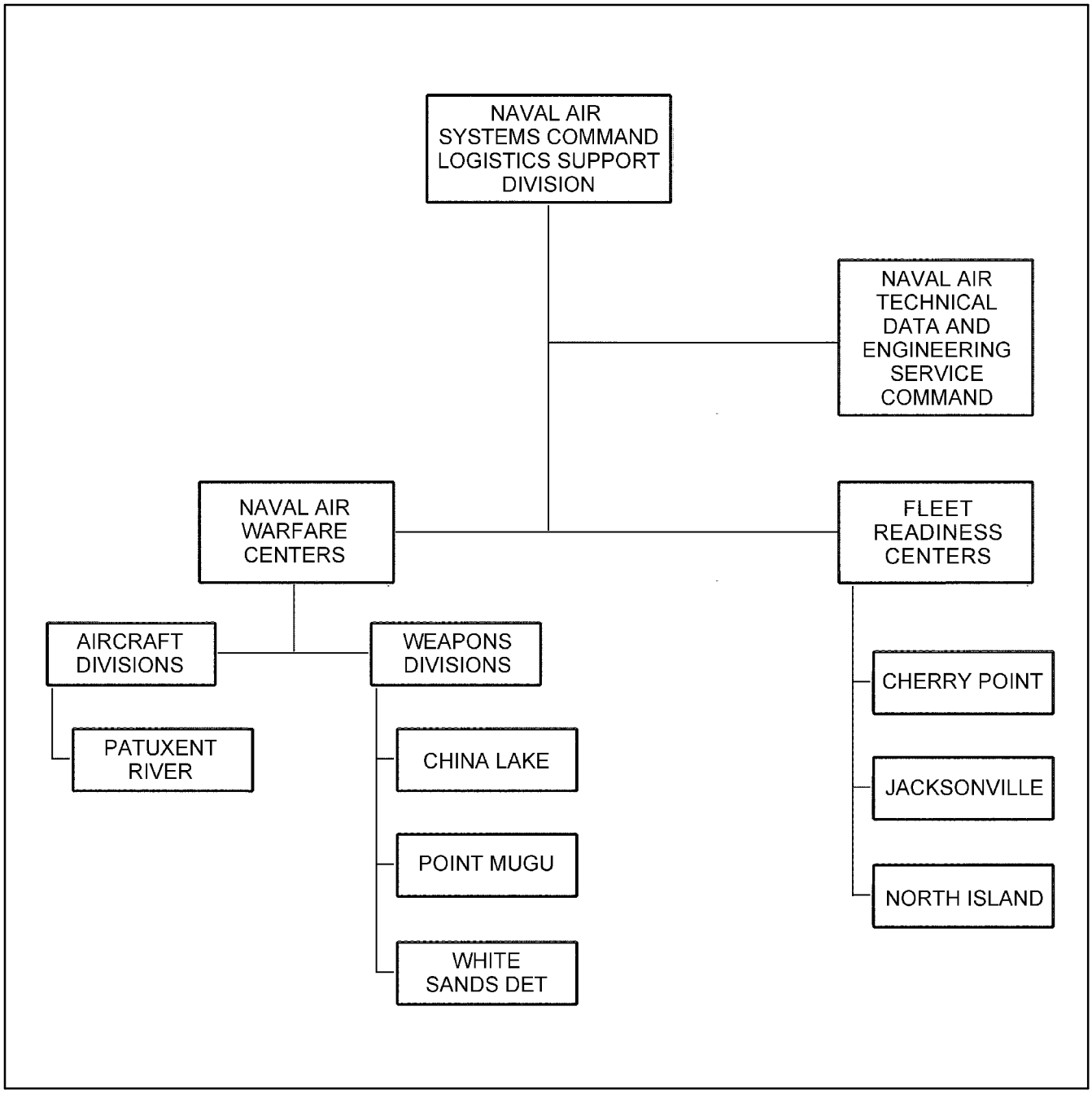

Figure 1-4-14. Organizational Relationships of Support Activities under COMNAVAIRSYSCOM

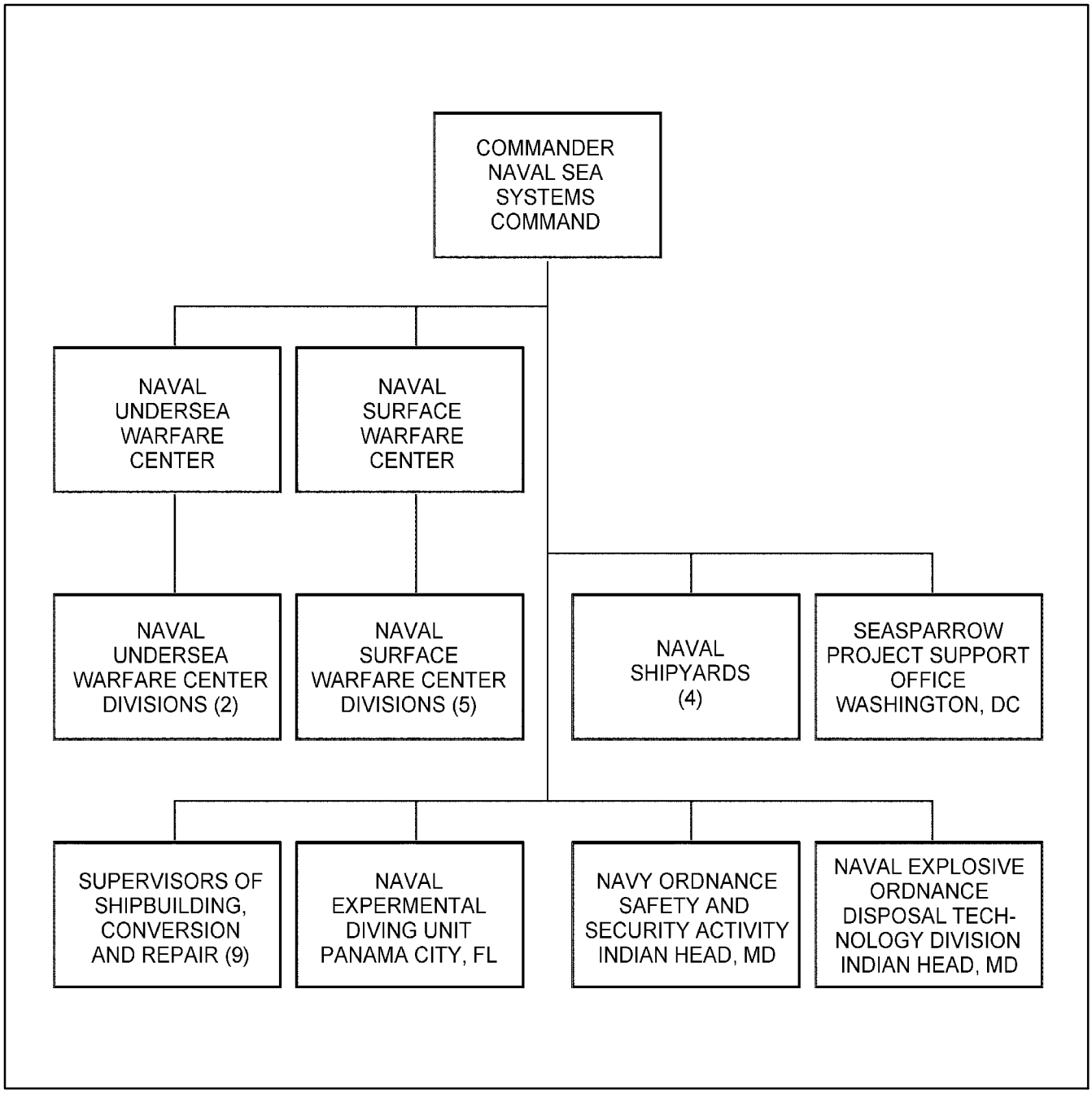

Figure 1-4-15. Organizational Relationships of Support Activities under COMNAVAIRSEASYSCOM

b. Maintaining control of RDT&E acquisition lifecycle phase ordnance and explosives inventory.

c. Providing ordnance assessment and maintenance policy guidance, procedures, technical direction, and management review of the program at each level of maintenance (Organizational, Intermediate, and Depot).

d. Providing ordnance maintenance processing documents in sufficient scope and depth to clearly delineate the maintenance functions and organizations responsible for performing them.

e. Directing a maintenance data system.

f. Providing ordnance maintenance material allowance lists.

g. Development of an effective training program for military and civilian personnel in the ordnance community.

h. Recommending procedural changes, methods, and technical guidance to effect continuing improvement in the NOMP.

1.4.48 Commander, Naval Supply Systems Command. The Commander, Naval Supply Systems Command (COMNAVSUPSYSCOM) is responsible for developing supply management policies and methods and for administering the Naval supply system. COMNAVSUPSYSCOM also provides material support for material handling, food service equipment and special clothing; manages the Navy stock fund; provides accounting support to Navy activities as assigned, and is responsible for transportation of Navy property. The organizational relationship of support activities under COMNAVSUPSYSCOM are listed in Figure 1-4-16. In addition, COMNAVSUPSYSCOM functions as Program Manager for OIS. COMNAVSUPSYSCOM field activities perform the following functions for COMNAVAIRSYSCOM in support of the NOMP:

a. Procurement of ordnance material directly from industry or other government agencies.

b. Allocation of COMNAVAIRSYSCOM procured materials to stock points.

c. Distribution of ordnance materials to fill replenishment stock requirements.

d. Referral of requisitions to stock points to meet end use requirements.

e. Initiation of disposal actions for materials that are in excess of system requirements.

f. Maintenance of ordnance material spares and spare parts catalogs.

g. Determination of repairable ordnance material secondary item rework requirements.

h. Development, issuance and updating of initial out fitting allowances applicable to ordnance material.

i. Management of program support inventory control point activities for air launched missile programs.

j. Maintenance of the Conventional Ammunition Integrated Management System.

k. Maintenance of the Ordnance Information System (OIS).

l. Development of allowance parts lists and coordinated shipboard allowance lists/coordinated shore base allowance list for airborne weapon material.

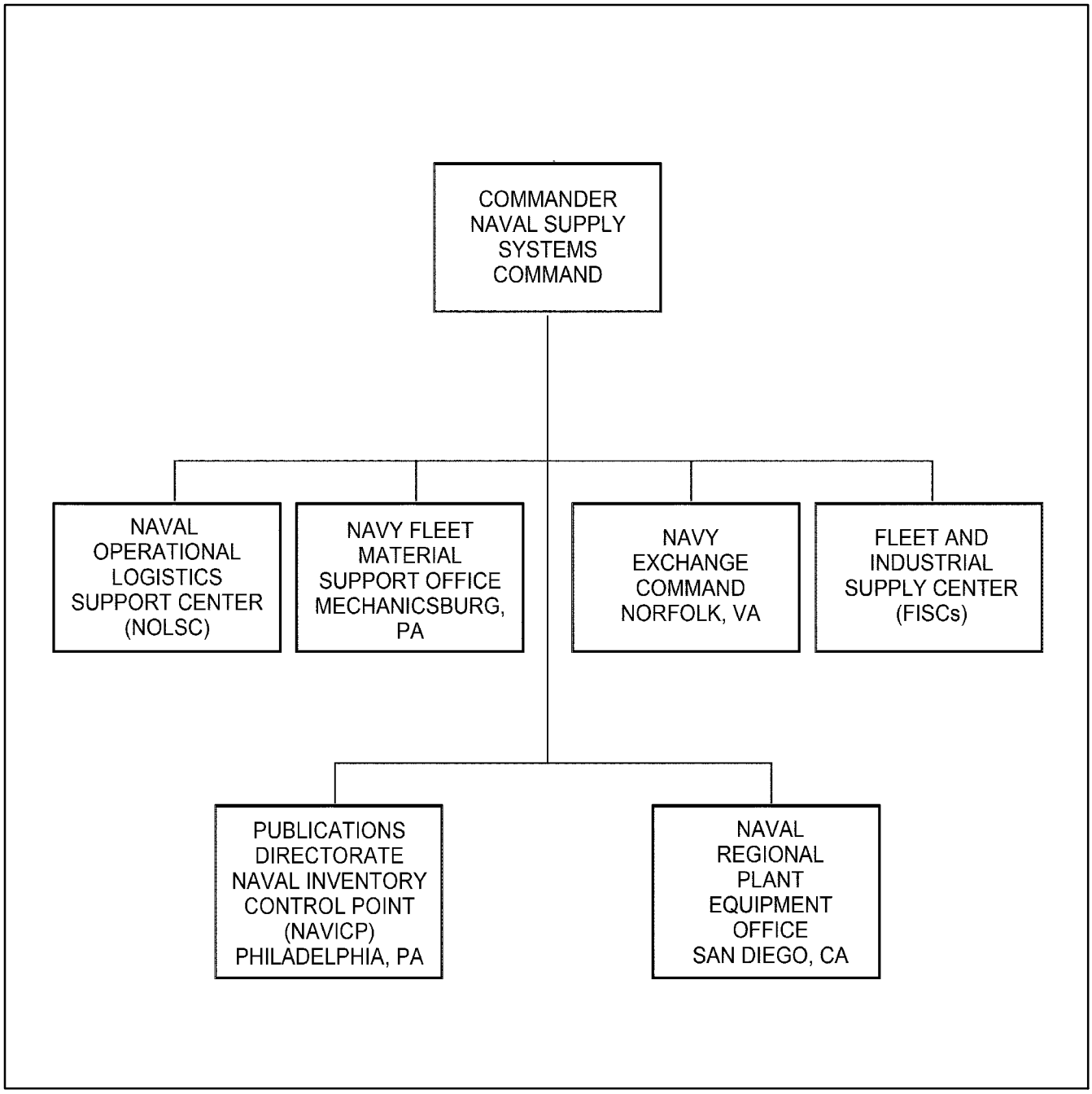

Figure 1-4-16. Organizational Relationships of Support Activities under COMNAVSUPSYSCOM

1.4.49 Naval Ordnance Safety and Security Activity. As a COMNAVSEASYSCOM activity, NOSSA is the designated Naval weapons and explosives safety Technical Authority; providing expertise, policy and compliance oversight and criteria spanning the lifecycle of weapons systems and explosives, including ordnance environmental support. Specific duties are identified in OPNAVINST 8020.14. To perform these duties, NOSSA collaborates with Program Managers, Fleet Commanders, the TYCOMs and various Technical Warrant holders to preclude and mitigate current operational explosives safety issues resident within the Fleet. NOSSA provides:

a. General oversight of the explosive safety programs.

b. Weapons System Explosive Safety Review Board (WSESRB).

c. Interface with Interagency Safety Boards.

d. Afloat Platform Explosives Safety.

e. Navy Ordnance Assessment Office (NOAO).

f. Electrical Safety, HERO, Lithium Battery safety programs.

g. Qualification/certification, Hazard Classification and technical direction for the Navy Insensitive Munitions (IM) program.

h. Ordnance Environmental Support Office (OESO).

i. Technical direction for Navy explosive handling and transportation requirements.

j. Explosives safety facilities certification reviews.

k. DON Explosives Safety publications that issue criteria pertaining to all ammunition and explosives operations.

l. DON Explosives Safety compliance validation (afloat and shore station inspections).

m. Navy AA&E Physical Security and Lock and Key Program Management.

1.4.50 Naval Warfare Centers. COMNAVSEASYSCOM and NAVAIRSYSCOM Warfare Centers provide engineering, test, Ordnance Assessment, and maintenance capabilities. The organizational relationships of support activities under COMNAVSEASYSCOM and NAVAIRSYSCOM are listed in Figures 1-4-14 and 1-4-15. COMNAVSEASYSCOM and NAVAIRSYSCOM field activities perform the following functions as assigned for Program Managers in support of the NOMP:

a. Produce, receive, inspect, segregate, store, issue and ship ammunition, explosives, expendable ordnance items and/ or ordnance as specified in assigned missions and tasks.

b. Maintain and rework ordnance as tasked and directed by the Program Managers.

c. Assemble, disassemble, modify, and perform tests on ordnance.

d. Perform Ordnance Assessment functions as assigned.

e. Perform maintenance and calibration of test equipment.

f. Report maintenance data via the applicable maintenance data collection system.

g. Submit information via transaction item reporting and Serialized Lot Item Tracking to OIS to maintain the inventory data base.

1.4.51 Naval Air Warfare Center Weapons Division. The Naval Air Warfare Center Weapons Division (NAVAIRWARCENWPNDIV) performs development, test and evaluation, development support, and follow-on engineering, logistics, and training support for Naval ordnance, weapons systems, weapons launchers, targets, unmanned air vehicles and related devices, and provides major range, technical, and base support for Fleet users and other Department of Defense and government agencies. NAVAIRWARCENWPNDIV is designated as the maintenance engineering activity for air launched missiles and other designated ordnance and related support equipment. As such, NAVAIRWARCENWPNDIV supports COMNAVAIRSYSCOM in basic design and maintenance engineering, and production support functions. NAVAIRWARCENWPNDIV provides the operational forces with engineering and technical services to provide advice, instruction, and training in the installation, operation, maintenance, and modification of ordnance and associated weapons support equipment. NAVAIRWARCENWPNDIV is responsible for development, verification, and maintenance of required documentation for loading, unloading, handling, check/test, release control, transport, and arm/dearm of all conventional ordnance and stores. NAVAIRWARCENWPNDIV is the Cognizant Maintenance Engineering Activity (CMEA) designated by COMNAVAIRSYSCOM for ordnance and related electronic components. NAVAIRWARCENWPNDIV processes Quality Deficiency Reports (QDR) and engineering investigation requests and administers the ordnance Corrective Action Program in accordance with this manual performs the air launched missile workload coordination function; and conducts ordnance logistics reviews of depot level industrial facilities. NAVAIRWARCENWPNDIV supports the air launched weapons industrial standards program development and implementation effort. NAVAIRWARCENWPNDIV is the principal Navy Research, Development, Test and Evaluation (RDT&E) center for air warfare systems (except antisubmarine warfare systems) and missile weapon systems. NAVAIRWARCENWPNDIV is the lead development agency for air launched missile acquisition and other selected ordnance. As such, NAVAIRWARCENWPNDIV works closely with air launched missile prime contractors and supporting Navy field activities and has the responsibility for coordinating matters affecting logistics support during the acquisition phase. In addition, NAVAIRWARCENWPNDIV performs the following functions in support of the NOMP:

a. Provides support to maintain and update the NOMP manual.

b. Develops changes and revisions as directed by the NOMP Policy and Working Committees.

c. Integrates changes and revisions into the NOMP manual after review and approval.

d. Maintains change records and control.

e. Provides support for annual NOMP Working and Policy Committee meetings.

f. Maintains a current distribution list for the NOMP manual.

g. Prepares and distributes announcement letters, and prepares agenda and agenda support packages.

h. Provides support, as necessary, to the sponsor and committee members to ensure a coordinated effort in support of the NOMP change process.

i. Publishes and distributes the NOMP manual after incorporation of approved changes.

1.4.52 Naval Surface Warfare Center Dahlgren, VA. The Naval Surface Warfare Center Dahlgren, VA, is the principal Navy RDT&E center for surface ship weapon systems, ordnance,

mines, and strategic systems support. The Naval Surface Warfare Center Dahlgren has certain responsibilities for selected air delivered chemical weapons and associated support systems.

1.4.53 Naval Ordnance Test Unit Cape Canaveral, FL. The Naval Ordnance Test Unit sponsors Navy range users and Navy contractors in the conduct of tests and collection of data on missiles and other ordnance equipment at the Air Force Eastern Test Range. When requested, the Naval Ordnance Test Unit evaluates tests performed, and provides technical control and direction for Navy programs.

1.4.54 Defense Contract Management Agency. The Defense Contract Management Agency acts as Technical Representative and Contracting Officer for the appropriate systems command in all matters relating to administration of contracts to the extent authorized by appropriate authority.

1.4.55 Raytheon Technical Services Company Indianapolis, IN. The Raytheon Technical Services Company Indianapolis, IN. conducts research, development, engineering, material acquisition, pilot and limited manufacturing, technical evaluation, depot maintenance, and integrated logistics support on assigned airborne electronics (avionics), missiles, space borne, undersea and surface weapon systems and related equipment; and performs such functions and tasks as directed by COMNAVAIRSYSCOM.

1.4.56 Naval Air Warfare Center Aircraft Division, Patuxent River, MD. The Naval Air Warfare Center Aircraft Division, Patuxent River, MD conducts tests and evaluation of aircraft weapon systems and their components. All Radio-Frequency (RF), (Passive and Active) airborne expendable countermeasure programs (Chaff, GEN-X and POET) now reside at Naval Air Warfare Center Aircraft Division, Patuxent River, MD. See Figure 1-4-17 for program points of contact.

1.4.57 Naval Safety Center. The Naval Safety Center collects and evaluates information pertaining to safety hazards, publishes statistical data concerning accidents, maintains a repository for accident and hazard reports, and maintains direct liaison with all levels of command within the Navy and other government and private agencies engaged in hazard awareness work and other aspects of the Department of the Navy Safety Program in order to advise and assist the CNO in promoting and monitoring safety and the prevention of accidents. The Naval Safety Center also initiates and conducts informal investigations into all phases of safety in order to develop recommendations for the formulation of safety policy necessary to maintain the highest practical level of combat readiness.

1.4.58 Commander, Naval Air Systems Command. The COMNAVAIRSYSCOM coordinates aviation Fleet maintenance support to ensure optimum aviation maintenance performance and Fleet readiness and to provide technical support in aviation life cycle logistics and maintenance planning.

1.4.59 Fleet Readiness Centers. Fleet Readiness Centers maintain and operate facilities for, and perform a complete range of depot level rework operations on designated weapon systems, accessories, equipments, manufacture parts and assemblies as required. Fleet Readiness Centers provide engineering services in the development of changes to hardware design; and furnish technical and other professional services on aircraft maintenance and logistic problems. Upon specific request or assignment, Fleet Readiness Centers perform other levels of aircraft maintenance for eligible activities. Fleet Readiness Centers are industrial activities under COMNAVAIRSYSCOM and are responsible for the performance of depot maintenance on designated ordnance (non-explosive items only) and for providing engineering, technical, and customer service support.

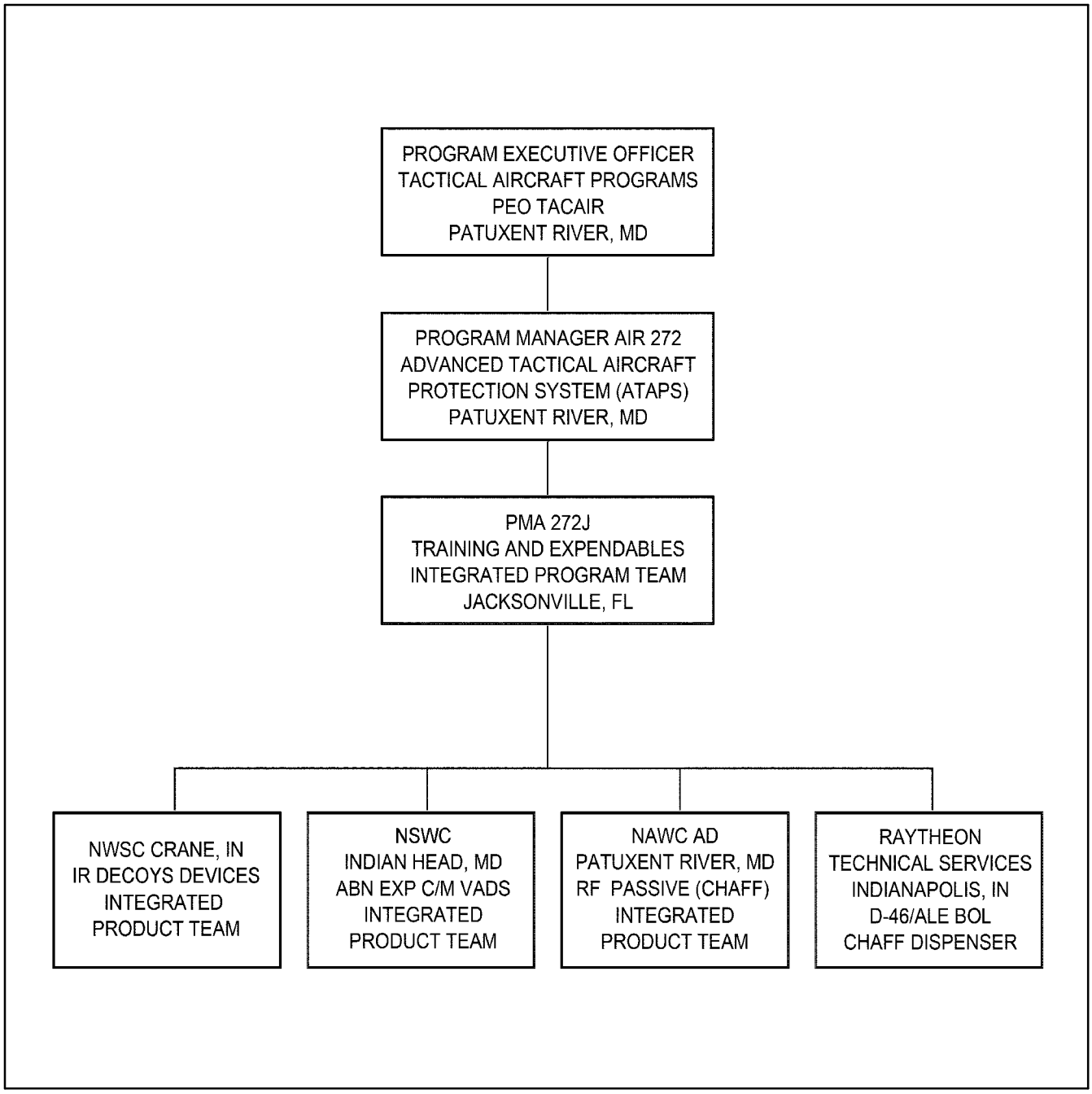

Figure 1-4-17. Airborne Expendable Countermeasures Organizational and Integrated Product Teams

1.4.60 Naval Air Technical Data and Engineering Command. Provides technical services in the development, preparation, publication, and distribution of aeronautical technical and maintenance management information to designated Naval and service-wide activities. The Naval Air Technical Data and Engineering Command exercises technical guidance of systems of reproduction and distribution for specified engineering design data. The Naval Air Technical Data and Engineering Command provides field engineering assistance, and instruction to Naval aviation activities in the installation, maintenance, repair, and operation of all types of aviation systems and equipment.

1.4.61 Naval Weapons Stations. Naval Weapons Stations provide material and technical support for ammunition, weapons, and weapon systems, maintain and operate explosive ordnance outloading or transshipment facilities, and provide home port services to Fleet ammunition or other support ships. Naval Weapons Stations are Commander U.S. Fleet Commands industrial maintenance facilities and perform Depot level maintenance functions on designated ordnance. COMUSFLTCOMs are responsible for the coordination and assignment of workload for the Naval Weapons Stations.

1.4.62 Naval Surface Warfare Center Division, Crane, IN. The Naval Surface Warfare Center Division, Crane, IN provides material, technical, and logistics support to the Navy for ship's and aircraft equipment, shipboard weapon and combat systems, and assigned surface and air expendable and nonexpendable ordnance items. NAVSURFWARCENDIV, Crane, IN is the cognizant field activity designated by COMNAVAIRSYSCOM to administer and perform weapons quality engineering functions for ordnance energetic components, and is a COMNAVSEASYSCOM industrial facility which performs depot maintenance for explosives by COMNAVAIRSYSCOM, NAVAIRWARCENWPNDIV, and Naval Supply Systems Command Global Logistics Support (NAVSUP GLS AMMO) Inventory Management Systems Division (IMSD) Mechanicsburg, PA direction.

1.4.63 Fleet and Industrial Supply Centers. Centers provide supply and support services to Fleet units and shore activities, as assigned, and perform such other functions as may be directed by COMNAVSUPSYSCOM.

1.4.64 Naval Undersea Warfare Center, Keyport Division, WA. The Naval Undersea Warfare Center, Keyport Division proofs, tests, and evaluates underwater weapons and components; exercises design cognizance of underwater acoustic ranges and range equipment; provides material, engineering, and technical support for assigned weapon systems, weapons, or components; and performs additional tasks as directed by COMNAVSEASYSCOM.

1.4.65 Naval Magazines. Naval magazines are Fleet activities whose responsibilities include weapons receipt, storage, packaging and unpackaging, renovation, and issue.

1.4.66 Naval Supply Systems Command Global Logistics Support (NAVSUP GLS AMMO), Mechanicsburg, PA. Is the inventory manager for all Navy and Marine Corps aviation ordnance material. NAVSUP GLS AMMO provides ordnance logistics support and maintains stockpile management information in a distributed and fully integrated information system. NAVSUP GLS AMMO functions include:

a. Tracking of all Navy arms, ammunition, and explosives moving in the public domain.

b. Cataloging and technical data management for all Naval ordnance and Marine Corps aviation ordnance.

c. Management of the Notice of Ammunition Reclassification (NAR) and Ammunition Information Notices (AIN) ordnance suspension/restriction program.

d. Management of the ordnance load plan.

e. Management of and operational oversight for Defense Transportation Tracking System (DTTS).

f. Management of the Retail Ordnance Logistics Management System (ROLMS).

g. Management of Non-Combat Expenditure Allocation (NCEA) program (with oversight from OPNAV).

h. Management of the Navy DEMIL program.

i. Ordnance Stratification.

j. Publication of the Master Repairable Items List (MRIL).

k. Publication of the NAVSUP P-724.

1.4.67 Navy Weapons Ordnance Assessment. Navy weapons OA functions are performed at Naval Air Warfare Center China Lake, Naval Surface Warfare Center Division, Crane, IN, Naval Surface Warfare Center Division Dahlgren and Naval Surface Warfare Center Division Indian Head, MD and Naval Surface Warfare Center Division Dahlgren, with data analysis assistance from Naval Surface Warfare Center, Corona. The Navy Ordnance Assessment Office at NOSSA is the OS Technical Authority; providing ordnance assessment coordination and managing the Ordnance Assessment Test Equipment procurement program.

1.4.68 Naval Surface Warfare Center Indian Head Division. The Naval Surface Warfare Center Indian Head Division, located at Indian Head, MD, is the principal Navy RDT&E center for energetics. The Naval Surface Warfare Center Indian Head has responsibilities for support of rocket motors, propellants, CADS and associated support systems.

1.4.69 Naval Surface Warfare Center Panama City Division. The Naval Surface Warfare Center Panama City Division, located at Panama City, FL, is the principal Navy center for mines and mine warfare systems support.

1.4.70 Naval Undersea Warfare Center Newport Division. The Naval Undersea Warfare Center Newport Division, Located at Newport, RI, is the principal Navy center for Heavyweight Torpedo and warfare systems support.

1.4.71 Naval Ordnance Maintenance Units. Naval Ordnance Maintenance Units are forward-based overseas Intermediate level maintenance activities outfitted with enhanced test and repair capabilities for specified weapons. Maintenance actions conducted at the Naval Ordnance Maintenance Units ensure that reliable weapons are available to deployed units.

1.4.72 Commander, Military Sealift Command. The Commander, Military Sealift Command, under the CNO, operates under the Navy Working Capital Fund and provides ocean transportation (via government owned or commercial vessels) for personnel and cargo of all components of the Department of Defense and as authorized for other Federal agencies; operates and maintains underway replenishment ships and other vessels providing mobile logistics support to

elements of the combatant Fleets; operates ships in support of scientific projects and other programs for Federal agencies; and prepares plans for the capability of expansion in time of emergency or war as necessary.

1.4.73 Commander, Operational Test and Evaluation Force. The Commander, Operational Test and Evaluation Force, under the CNO, conducts operational tests and evaluations of specific weapon systems, ships, aircraft and equipments, including procedures and tactics, where required, and, when directed by the CNO, assists development agencies in the accomplishment of necessary development, efforts, tests and evaluations.

1.4.74 Commander, Fleet Activities/Naval Activities. COMFLEACTs and NAVACTS are Fleet activities whose responsibilities include weapon receipt, storage, packaging and issue, unpackaging, and renovation.

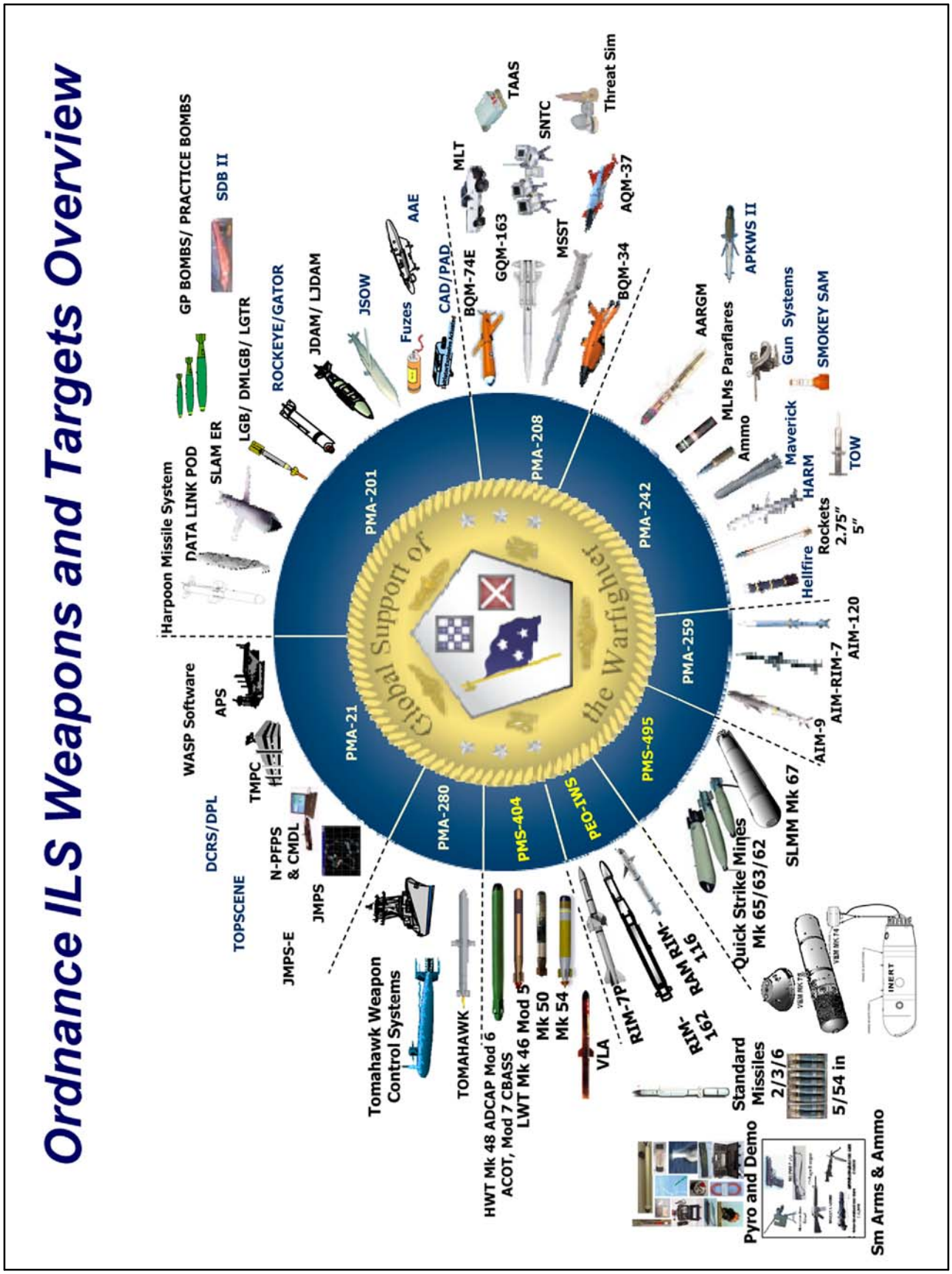

Figure 1-4-18. N411 Ordnance ILS Weapons and Targets Overview

CHAPTER 1.5

Naval Ordnance Training

Table of Contents

Paragraph	Subject	Page
1.5.1	General	1-5-1
1.5.2	Objective	1-5-1
1.5.3	Policy	1-5-1
1.5.4	Responsibilities	1-5-1
1.5.5	Scope	1-5-1

CHAPTER 1.5

Naval Ordnance Training

1.5.1 General. Training is a significant factor in achieving and sustaining ordnance readiness. This chapter provides an overview of the objective, policy, and responsibilities attendant to the planning, funding, and provisioning of Naval ordnance training. A more in-depth discussion is presented in Section 6 of this volume.

1.5.2 Objective. The objective of Naval ordnance maintenance training is to ensure that personnel who operate, maintain, and support weapons systems and associated equipment are adequately trained and qualified to perform their respective functions in a manner which optimizes system design effectiveness.

1.5.3 Policy. It is CNO's policy to improve Naval personnel professional development and training effectiveness, and to institutionalize warfare qualification requirements to develop Naval personnel as highly qualified, flexible, and adaptable warfighters, operationally and technically. Therefore, every effort shall be made to ensure that personnel trained in ordnance evolutions are qualified and available simultaneously with the operational introduction of new weapons system equipment to meet validated fleet requirements.

1.5.4 Responsibilities. The CNO and Commandant of the Marine Corps are responsible for training Navy and Marine Corps forces, and for directing subordinate Department of the Navy commands to ensure all personnel involved with Ordnance maintenance have gained sufficient knowledge to safely execute their assigned job scope. Also making available and distributing the manpower and material resources required to attain and sustain Naval Ordnance Training.

1.5.5 Scope. IAW NOMP guidance, training and certification requirements are applicable to all levels of ordnance maintenance and support functions.

a. Explosives Handling Personnel Qualification and Certification (QUAL/CERT) All personnel who handle and or perform maintenance on Ammunition and Explosives (A&E) at the Organizational, Intermediate and Depot levels of maintenance shall be Qualified and Certified per OPNAVINST 8023.24/MCO P8023.3 series and TYCOM Directives. Additional information on Ammunition and Explosives Handling Personnel Qualification and Certification can be found in Volume I, Section 6 of this manual.

CHAPTER 1.6

Hazardous Material Control and Management

Table of Contents

Paragraph	Subject	Page
1.6.1	Organization Hazardous Material Control and Management	1-6-1
1.6.2	Airborne Weapon and Target System Pollution Prevention/Hazardous Materials Control and Management	1-6-1

CHAPTER 1.6

Hazardous Material Control and Management

1.6.1 Organization Hazardous Material Control and Management. COMNAVAIRFORINST 4790.2 series enumerates the organization, duties, and responsibilities for all organizations involved with the operation and support of Navy and Marine Corp manned and unmanned aircraft. Contained, therein, are detailed requirements for Hazardous Material (HAZMAT) Control and Management Program. The purpose of the HAZMAT Control and Management Program is to ensure the safe use of HAZMAT through adoption of a ”cradle-to-grave” concept where HAZMAT is closely managed throughout its life cycle, from acquisition to use and eventual disposal.

1.6.2 Airborne Weapon and Target System Pollution Prevention/Hazardous Materials Control and Management. In addition to the HAZMAT Control and Management Program in COMNAVAIRFORINST 4790.2 series, the Airborne Weapon and Target System Pollution Prevention/Hazardous Material Control and Management (P2/HMCM) Program minimizes and controls all hazardous materials specified in technical manuals for all commodities listed in Volume I, paragraph 1.2.8.2.1 of this manual except special weapons, common avionics equipment, and common support equipment. The purposes of the Program are to:

a. Reduce hazardous waste by reducing the quantity of hazardous materials required to maintain airborne weapons.

b. Eliminate the use of Ozone Depleting Substance (ODS).

c. Eliminate the use of Volatile Organic Compound non-compliant materials.

d. Reduce the use of known and suspected carcinogens.

e. Reduce the requirement for proprietary materials.

f. Control the use of hazardous materials.

An airborne weapons hazardous material Authorized Use List (AUL) appears in NAVAIR 01-1A-75 (Airborne Weapons and Associated Equipment, Consumable Material Applications and Hazardous Material Authorized Use List). NAVAIR 01-1A-75 serves as the authoritative control document for all hazardous materials used in conjunction with the commodity maintenance manuals for those systems listed in Volume I, paragraph 1.2.8.2.1. Only those hazardous materials listed in the AUL are authorized for procurement and use by airborne weapon/target system maintenance activities.

CHAPTER 1.7

Afloat Platform Weapon Integration

Table of Contents

Paragraph	Subject	Page
1.7.1	Policy	1-7-1
1.7.2	Responsibilities	1-7-1

CHAPTER 1.7

Afloat Platform Weapon Integration

1.7.1 Policy. NAVSEASYSCOMS and NAVAIRSYSCOMs shall establish policy and methodologies to assure that afloat platforms have adequate facilities to support new or modified weapons or weapon systems for both New Acquisition and In-Service programs.

1.7.2 Responsibilities. Activities for the integration of afloat platform weapons, weapon systems and weapon delivery systems shall coordinate with NAVSEASYSCOM to ensure safe and efficient integration into an afloat platform environment.

1.7.2.1 NAVSEASYSCOM shall be responsible for:

a. Developing processes that adequately evaluate conceptual designs and capabilities and/or requirements documentation for weapon systems and weapon delivery systems to include ordnance handling and stowage.

b. Developing processes which examine explosives safety, shipboard interfaces, and identifies critical mission areas involving the integration of weapons, weapon systems and weapon delivery systems to include ordnance handling and stowage.

c. Providing a review process for independent verification and validation of compliance with explosives safety design criteria.

1.7.2.2 NAVAIRSYSCOM shall be responsible for:

a. Developing processes that adequately evaluate conceptual designs and capabilities and/or requirements documentation for aviation weapon systems and weapon delivery systems to include ordnance handling and stowage.

b. Developing processes which examine shipboard and aviation weapons interface functionality, and identifies critical mission areas involving the integration of aviation weapons, weapon systems and weapon delivery systems to include ordnance handling and stowage.

c. Providing a review process for independent verification and validation of compliance with requisite design criteria and operational requirements.

CHAPTER 1.8

Shipboard Weapons Integration Program

Table of Contents

Paragraph	Subject	Page
1.8.1	Shipboard Weapons Integration Program	1-8-1
1.8.2	General	1-8-2
1.8.3	Purpose	1-8-3
1.8.4	Responsibilities	1-8-3
1.8.5	Ship Visits	1-8-4

CHAPTER 1.8

Shipboard Weapons Integration Program

1.8.1 Shipboard Weapons Integration Program Elements.

1.8.1.1 During Milestone A the Program Manager must begin development of procedures to ensure the new or modified weapon/weapon system can be safely and efficiently deployed aboard each class ship from which the system will be operated from, as identified in the Joint Capability Integrated Document System (JCIDS). JCIDS replaced the Operational Requirements Document (ORD) but still remain as source documents for legacy weapons or weapon systems. Early participation in program development by the SWIT will identify the impact of the weapon system aboard each class ship. Facility requirements will be identified and documented. The SWIT is comprised of personnel from Naval Sea Systems Command (NAVSEA); Naval Air Systems Command (NAVAIR); Naval Air Warfare Center Weapons Division (NAWCWD), China Lake, CA; Naval Ordnance Safety and Security Activity (NOSSA), Indian Head, MD; Naval Surface Weapon Center Indian Head (NSWC IHD) Detachment Earle; and Naval Surface Warfare Center, Carderock Division-Ships Systems Engineering Station (NSWCCD-SSES) Philadelphia. The SWIT will visit ships during their life cycle to assess initial acceptance by the Navy and as follow on reviews for introduction of weapons or weapon systems as a new mission capability requirement.

1.8.1.2 A site survey on each class ship must be conducted to identify if adequate facilities are available to safely support the weapon system. These facilities cover spaces for handling, stowage, breakout, assembly, test and programming, and ready service. Requirements for support equipment, Aircraft Armament Equipment (AAE), and ancillary equipment are identified. Requirements for electrical power, compressed air, munitions handling equipment, and servicing equipment are identified. Hazards of Electromagnetic Radiation to Ordnance (HERO), Electromagnetic Interference (EMI), fire suppression, and personnel hazardous conditions are identified to ensure safe support of the weapon system throughout the intended shipboard environment.

1.8.1.3 If facilities are not adequate aboard any class ship, a document is generated as part of the Ship Maintenance (SHIPMAIN) Process. The SHIPMAIN is intended to increase the ability of the ship to support the new or modified weapon system. It describes the improved equipment, system, and/or capability to be installed, its purpose, and its relationship to existing equipment systems. After approval by the program management office in NAVAIR or NAVSEA, the SHIPMAIN is forwarded to the Office of the Chief of Naval Operations (OPNAV) program sponsor for approval and signature. The SHIPMAIN is then forwarded to the NAVSEA Platform Directorate. Upon approval and signature, NAVSEA will forward the SHIPMAIN to their OPNAV platform sponsor. Final approval of the SHIPMAIN leads to preparation and submittal of a Justification Cost Form (JCF) by NAVSEA. The JCF is used to arrive at a management decision to proceed with development of a ship alteration (SHIPALT). Review of all SHIPALTs by cognizant NAVAIR personnel is vital to ensure weapon system requirements are satisfied.

1.8.1.4 During Milestone B preparations shall be made to validate and certify the SHIPALT installation by performing a Ship Installation Assurance Test (SIAT). The SIAT is a test to demonstrate that the new or modified weapon support facilities have the capability to satisfactorily fulfill weapons handling, stowage, assembly, and checkout operations for which they were designed. The SIAT is required to evaluate and certify the SHIPALT installation is ready for acceptance. Support equipment, containers, and inert handling shapes of all types of weapons supported by the facilities are provided and demonstrated during the SIAT. A formal report is prepared and forwarded to NAVAIR and NAVSEA identifying all discrepancies and required resolution. A follow-up visit is performed to ensure discrepancies are corrected prior to completion of the overhaul. In case of new construction ships, a Consolidated Operability Test (COT) is performed prior to or during builders trials to validate and certify all weapons related magazines/facilities/handling routes aboard the ship. The COT is a test to demonstrate that all weapon support facilities have the capability to satisfactorily fulfill weapons handling, stowage, breakout, assembly, and Common Munitions Bit Reprogramming Equipment (CMBRE) operations for which they were designed. The intent is to ensure that the facilities complement the supporting equipment and personnel with a capability that will achieve operational readiness and flexibility, and can be safely operated by Fleet personnel within current Fleet training programs. The COT is required to evaluate and certify that the ship being built is ready for acceptance. Support equipment including, Material Handling Equipment (MHE), Ordnance Handling Equipment (OHE), AAE, Armament Weapons Support Equipment (AWSE), containers, test equipment, i.e. (CMBRE/CMBRE Plus (+)/Common Field-Level Memory Reprogramming Equipment (CMFRE)/Common Racks and Launchers Test Set (CRALTS)) and inert handling shapes of every type of weapon system supported by the facilities are provided and demonstrated during the COT. The COT also evaluates joint service aviation ordnance capabilities as defined in a JCIDS document or Joint Pub 3-04.1. A formal report is prepared and forwarded to NAVAIR and NAVSEA identifying all discrepancies and required resolution. A follow-up visit is preformed to ensure discrepancies are corrected prior to Fleet use.

1.8.1.5 During Milestone C initiation of the Ship Suitability Test (SST) process shall begin. The SST is conducted for all air-launched weapons and aircraft defense systems introduced into the Fleet for operational shipboard use. The test is accomplished during late Technical Evaluation (TECHEVAL). The test involves Navy personnel subjecting the weapon system to underway replenishment, dock-side replenishment, strike-down, stowage, de-canning, assembly, servicing and checkout, strike-up, aircraft/weapons system loading and downloading, arming, and de-arming. Handling operations are checked for simplicity and compatibility with the shipboard environment. The test requires participation of the embarked air wing, shipboard departments, and auxiliary Naval vessels. It ensures that Naval personnel can support the system aboard ship using the training and technical documentation provided by the program. A formal report, including photographs, is forwarded to NAVAIR and other cognizant activities.

1.8.2 General. This chapter addresses the Shipboard Weapons Integration Program and explains how it is used to ensure facilities aboard ships can safely and efficiently accommodate a new or modified weapon system. Uniform procedural instructions are included for use of the joint COMNAVAIRSYSCOM and COMNAVSEASYSCOM Shipboard Weapons Integration

Teams (SWIT) to assess the capability of being able to handle, stow, transport, assemble, and/or employ a weapon or weapon system by the ship and its crew.

1.8.3 Purpose. The purpose of this chapter is to establish a program to conduct shipboard weapons integration and improve the process for safe and effective introduction of new or modified weapons and/or weapon systems to the Fleet.

1.8.4 Responsibilities.

1.8.4.1 The SWIT shall perform the following:

a. Participate in design and program reviews specifically concerned with shipboard integration development and requirements.

b. Coordinate and conduct site surveys to establish shipboard facility requirements for new or modified weapon systems.

c. When shipboard facilities are inadequate to support the new or modified weapon system, develop and prepare SHIPMAINs.

d. Participate in the development and review of the SHIPALT to ensure program requirements are met.

e. Control and direct shipment of inert weapon handling shapes, containers, and support equipment for SIATs.

f. Support, participate in and/or conduct the SIATs/COTs. Report on SIAT/COT discrepancies.

g. Review weapons safety requirements, armament support equipment, and container design for new or modified weapon systems.

h. Coordinate and conduct the SSTs for new and modified weapons systems. Report on SST results.

i. Participate as members in the Weapon System Explosive Safety Review Board (WSESRB).

j. Convene periodic forums to discuss common platform design and/or weapons integration issues and leverage available resources to collectively maximize efforts in proposing design alternatives that reduce inherent risk, correcting identified deficiencies, or mitigating the inherent risk to an acceptable level.

1.8.4.2 Fleet Commands (Commanders U.S. Fleet Forces Command (USFF) and Commander, Pacific Fleet (CPF)) shall play an integral role in the decision making process that can affect the construction of all new platforms and/or ship alterations. Decisions should ensure that all facilities aboard the ship or within the ship class can safely and efficiently accommodate current, new, or modified weapon systems.

a. Participate as members in the Shipboard Weapons Integration Program.

b. Review and comment on all pertinent JCIDS.

c. Review and comment on all pertinent SHIPMAIN documents.

d. Participate as members in the Weapon System Explosive Safety Review Board (WSESRB).

1.8.4.3 TYCOM field representatives from the Naval Air and Surface Forces perform the following:

a. Provide direct independent on-site engineering and technical service to Force Weapons and Ships Material Officers in support of conventional air-launched weapon systems.

b. Represent the TYCOM at SIATs/COTs and yard walkthrough with responsibility for confirming proper progression of SHIPALT installation.

c. Provide assistance to NAVAIR, NAVSEA, Naval and commercial shipyards, and other activities in support of air and surface weapons handling requirements.

d. Provide technical assistance in the areas of air and surface launched weapons and weapons systems stowage, handling and maintenance. Furnish guidance and coordination between the TYCOM and various ships, NAVAIR, NAVSEA, Naval Air Warfare Center Aircraft Division (NAWCAD), NAWCWD, NOSSA, shipyards, repair facilities, and other Naval activities as may be required. This service is directly related to the operation, maintenance, diagnosis, repair, overhaul, modification, test, certification and safety of all types of air launched weapon/systems including stowage facilities, installed support and handling systems.

e. Coordinate with NAWCAD, NAWCWD, NOSSA, on possible solutions to Fleet problems with weapons/weapon systems.

f. Assist NAVAIR, NAVSEA and NSWCCD-SSES in the development of weapon/system related SHIPALTs and repairs. Also develops ship modernization and maintenance planning.

g. Provide assistance for maintaining and certifying magazine sprinkler systems, weapons elevators, AWSE, MHE, OHE, MHE, and ordnance support equipment. Coordinate with the responsible staff department/division to effect repair/maintenance as required.

h. Conduct the SIAT/COT follow-up visits with ships and the installing activity to ensure resolution of SIAT/COT discrepancies.

1.8.5 Ship Visits.

1.8.5.1 COT Process.

1.8.5.1.1 Requirements. The requirements for conducting a Consolidated Operability Test (COT) shall be invoked by the shipbuilding contract and shall become a part of the applicable shipbuilding specifications. A COT shall be performed near the end of the New Construction Process but prior to shipbuilder trials.

1.8.5.1.2 Implementation. NAVSEA SWIT (Code N7) and NAVAIR SWIT (Code 671500D) working with NSWCCD-SSES Philadelphia (Code 972) and the responsible Naval Supervising Activity (NSA) shall take appropriate action to implement the policies and procedures in this document. Any deviations from this document shall be authorized by OPNAV (Code N411).

1.8.5.1.3 Notification. At least 30 days prior to the COT, the responsible NSA shall send a message notifying NAVSEA SWIT (Code N7)/NAVAIR SWIT (Code 671500D) and the principal attendees, (NAVSEA Headquarters (Ship Design Manager (SDM)/Ship Program Manager (SPM)/Principal for Safety (PFS)), NSWCCD-SSES Philadelphia (Code 972), NSWC IHD Detachment Earle, Com-

mander Naval Air Forces (Codes N41/N42), Commander Naval Surface Forces (Codes N41/N42), and the ship) of the COT dates. Informational addressees include Program Executive Office Unmanned Aviation & Weapons (PEO U&W), Program Executive Office Aircraft Carriers (PEO Carriers), Program Executive Office Ships (PEO Ships), other shipyards and the NAVSEA/NAVAIR SWIT COT Coordinator.

1.8.5.1.4 Objective. The intent of the COT is to demonstrate all facets of weapons handling, stowage, breakout, assembly, CMBRE, strike-up, ready service, strike-down, disassembly, and return to stowage. The test must include but shall not be limited to weapons system interfaces such as weapons elevators, package conveyors, hoists, OHE, AWSE, MHE and/or the Peculiar Support Equipment (PSE) required for the demonstration. The COT shall verify compliance with all applicable specifications, block diagrams, drawings, drawing packages, and other documents pertaining to new construction ships. The COT shall certify the installation and operability of the ships weapons to ensure that a fully operational weapons handling and stowage system is delivered to the Fleet. The COT shall be accomplished allowing enough time for the Shipbuilder to correct any discrepancies, prior to ship delivery. The responsible NSA in concert with the NAVSEA/NAVAIR SWIT COT Coordinator shall validate the satisfactory correction of all discrepancies.

1.8.5.1.5 Test Dates. COT test dates should be scheduled late enough in the ship construction process to allow completion of all required work, but early enough to allow correction of all COT major discrepancies, prior to Shipbuilder Trials.

1.8.5.1.6 Naval Supporting Activity (NSA).

a. The NSA shall be responsible for ensuring compliance with the requirements of this manual. The NSA shall ensure that the appropriate technical manuals/instructions are used to provide the technical guidance for accomplishing the installation and for meeting the requirements for handling each specific weapon or weapon system. The NSA shall ensure proper and timely scheduling of the 70% Yard Walk-Thru (YWT) and the COT.

b. NAVSEA SWIT (Code N7) and NAVAIR SWIT (Code 671500D) working with NSWCCD-SSES Philadelphia (Code 972) shall provide a COT Test Plan to the NSA. The NSA shall provide a pre-COT inspection check-off list to NAVSEA (05Z44) for approval. The approved pre-COT inspection check-off list shall be used during the 70% YWT. For those systems not completed, the extent of incompleteness and expected date of completion shall be noted on the check-off list.

c. The NSA shall direct all requests for inert weapons, components, and handling equipment for testing affected facilities to NAVAIR Code 671500D, the appropriate NAVSEA representative or the cognizant weapons engineering support activity. Requests should be submitted at least 60 days prior to COT. A copy of the request shall be provided to NAVSEA SWIT (Code N7), NSWCCD-SSES Philadelphia (Code 972), TYCOM, NSWC IHD Detachment Earle and the affected ship. The NSA shall ensure that all equipment and inert weapons are returned via signature service, upon completion of the test requirements. All handling equipment or inert weapons damaged during the tests shall be reported to the NAVSEA/NAVAIR SWIT COT Coordinator who will notify NAVAIR or the applicable NAVSEA cognizant weapons engineering support activity, as soon as possible.

1.8.5.1.7 Shipbuilder Responsibilities.

a. The Shipbuilder shall ensure that all equipment, auxiliary services, and support systems required for the validation of weapons handling and stowage system installation are fully operational and have met all weight testing requirements. This includes weapons elevators, manual and pneumatic hoists, monorails, and all other related items.

b. The Shipbuilder shall ensure that all production work, in the areas associated with the demonstrations, has been completed prior to the COT. Any other production work that could interfere with the COT shall not be permitted during the demonstration. All applicable spaces shall be clean, free from obstructions and ready prior to the demonstration.

c. The Shipbuilder shall assign a shipyard coordinator to work with the NAVSEA/NAVAIR SWIT COT Coordinator.

d. NAVSEA/NAVAIR SWIT COT Coordinator:

(1) The NAVSEA/NAVAIR SWIT COT Coordinator shall be responsible for ensuring compliance with the requirements contained within this manual. The NAVSEA/NAVAIR SWIT COT Coordinator shall also be intimately familiar with the weapons handling and stowage system installation and the support equipment and support systems required for the COT.

(2) The NAVSEA/NAVAIR SWIT COT Coordinator shall prepare a COT test plan and test procedures. A copy of the test plan shall be provided to the appropriate NAVSEA Technical Authority 30 days prior to commencement of the COT. These test procedures shall be prepared using enclosure (5) as guidance. The COT test plan and procedures shall be provided to each principal attendee 10 days prior to commencement of the COT.

(3) The NAVSEA/NAVAIR SWIT COT Coordinator shall ensure that all inert weapons/rounds (training shapes), weapons cradles, containers, wings, fins, sonobuoys, gun loaders, and all other items scheduled to be handled are on board the ship prior to the start of the COT. All necessary strongbacks, hoists, forklift trucks, skids, and other handling equipment shall also be available and in operating condition. All weight handling equipment must have current load test tags installed, in accordance with NAVSEA SG420-AP-MMA-010.

(4) The NAVSEA/NAVAIR SWIT COT Coordinator shall schedule the YWT. The intent of the YWT is to validate that the weapons handling and stowage system installation complies with all design requirements. It reduces unnecessary cost to the government and the contractor by identifying major discrepancies and/or design flaws early in the installation process, to ensure satisfactory COT results. The YWT should be conducted at a point in the ships construction process that affords visual inspection of the facilities to ensure that they meet design requirements. It should be done early enough in the process to allow correction of as many discrepancies as possible prior to the COT and to ensure that the shipboard installation is ready for the COT. The YWT shall be conducted on each testable, self-sufficient part of weapons handling and stowage system installation, as soon as possible after completion of work, in order to identify and correct discrepancies prior to the COT. The SWIT, NAVSEA Headquarters (SPM/SDM), NSWCCD-SSES Philadelphia (Code 972), NSWC IHD Detachment Earle, Fleet Commands, and TYCOMs shall be notified of tentative dates of YWTs involving weapons handling and stowage functions. Firm dates shall be provided at least 7 days prior to the YWT.

CVNs: Due to the magnitude and scope of a CVN COT, the YWT for the COT shall take place no later than four weeks but no sooner than six weeks prior to the COT. Following the YWT, a decision shall be made concerning the readiness of the ship for the COT and, if necessary, an alternate test date shall be set. Both CNAF and the applicable SPM shall be informed of any change.

1.8.5.1.8 Discrepancies. All safety related discrepancies, as well as discrepancies that prohibit the weapon or weapon system from functioning as it was intended, shall be recorded as major discrepancies. Failure to comply with general or special testing requirements required by installation drawings, specifications, or directives may be recorded as a major discrepancy. Any major discrepancy not corrected by the Shipbuilder, during the COT, shall be recorded and listed in the COT report as unsatisfactory. In the event of a disputed major discrepancy, the Shipbuilder shall request adjudication from NAVSEA. NAVSEA SWIT/NAVAIR SWIT and a representative from the NSA shall verify the correction of all major discrepancies. All major discrepancies shall be corrected prior to the Shipbuilder Trials. Minor discrepancies, not corrected prior to the completion of the COT, shall be documented in the COT report and incorporated into the shipbuilder's Master Work Item List or other document which consolidates all deficiencies, including those from outside activities, such as INSURV, for correction.

1.8.5.1.9 Documentation, Tests and Demonstrations. Preliminary technical manuals, ILS support, and installation drawings shall be complete and available upon request. All COT tests and demonstrations shall be conducted and supervised by the Shipbuilder (Design Development Contractor) prior to delivery of the ship to the Navy. In order to mitigate the risk of personnel injuries or equipment damage, all personnel supervising or handling inert ordnance and/or training shapes will be fully trained and certified. The preferred training and certification process is delineated in OPNAVINST 8023.24 series, but for contractors who do not handle any AE other than inert ordnance/training shapes, the contractor may provide documentation to the SWIT coordinator defining their training process, certifying that the handlers and supervisors have been fully trained and certified to safely move the inert ordnance/training shapes, and acceptance of any/all risk. Should the contractor not be able to meet these requirements, the Program Manager may submit a waiver request to OPNAV N411 identifying the background and justification why the contractor can not achieve compliance with these training and certification requirements, as well as documentation of a risk assessment and full acceptance of any/all risk. Should the SWIT Coordinator not find an acceptable level or rigor in the contractor provided training program or documentation, OPNAV N411 will adjudicate whether the training/documentation is acceptable. In extreme circumstances where the Program Manager has gained OPNAV N411 approval to conduct the COT after acceptance of the ship by the Navy, the tests and demonstrations will be conducted by shipboard personnel who are fully qualified and certified IAW OPNAVINST 8023.24. The COT demonstrations shall include the worst-case weapons configurations or configurations with unusual handling, stowage or breakout problems, as identified by NAVSEA SWIT/NAVAIR SWIT, NSWCCD-SSES Philadelphia, NSWC IHD Detachment Earle, USFF/CPF, and the TYCOM. Visitor participation will be restricted to observing the demonstration, providing technical assistance, and reporting discrepancies to the NAVSEA/NAVAIR SWIT COT Coordinator. The COT shall not be conducted in different phases, except when authorized by NAVSEA/NAVAIR SWIT. All parts of the COT shall be conducted consecutively without interruption, except for weekends and holidays. The following tests and demonstrations shall be conducted:

a. Weapons Elevators: All weapons elevators shall be demonstrated to show satisfactory operation and have a valid weight test. All test documentation, including the Shipbuilder's test plan for each of the weapons elevators shall be completed. All elevator grooming and hot work shall be completed prior to the COT.

b. Ships Armory, weapons issue points, and small arms spaces: Weapons and small arms handling, stowage, buildup/assembly, and transfer spaces shall be checked for completeness and weapons fit, utilizing actual stowage containers and inert shapes. Fit tests, by use of weapons or containers/packaging dimensions, in lieu of actual stowage containers and inert shapes, will be held to a minimum. Spaces will also be assessed to confirm compliance with Arms, Ammunition and Explosives (AA&E) physical security requirements as prescribed by OPNAVINST 5530.13.

c. Inert component stowage areas: Handling and stowage of inert components such as bomb fins, missile wings and fins, sonobuoys, launch and handling equipment, etc., shall be demonstrated.

d. Weapons assembly areas: Weapons assembly shall be demonstrated in all compartments designed and designated for weapons assembly. All related assembly operations shall be performed in accordance with the applicable weapons assembly technical manual, with the inert weapons in ready-service configuration struck-up to the main or flight deck level.

e. Weapons test and maintenance area: Inert weapons shall be transported into and out of weapons test and maintenance areas. Simulated tests shall be performed on these weapons to demonstrate the availability of all necessary equipment and services, such as special tools, test stands, electric power, nitrogen, and compressed air.

f. Aviation Ordnance Shops: Simulated maintenance operations on ordnance equipment (e.g. launchers, ejector racks, gun systems, etc.) shall be performed to demonstrate the availability of all-necessary equipment and services.

g. Miscellaneous and Ready Service Ammunition Lockers: Miscellaneous and Ready Service ammunition lockers shall be inspected for completeness, ammunition fit, and compliance with NAVSEA approved drawings. Lockers shall be inspected for proper preservation and installation of sunscreens and thermometers. If the lockers are jettison-able, the jettison feature shall also be inspected using proper procedures.

h. Magazine Sprinkler Systems: All magazine sprinkler systems shall be checked for compliance with NAVSEA S9522-AA-HBK-010. Sprinkling system check-sheets shall be complete and available upon request.

i. Heating, Ventilation, and Air Conditioning (HVAC) System: All HVAC systems for weapons magazines and other weapons buildup/assembly, handling, transfer, test, and maintenance areas shall be checked for compliance with the applicable HVAC Design Criteria Manual.

j. Weapons Handling Routes: A demonstration shall be conducted with inert weapons, training shapes, and/or Captive/Dummy Air Training Missiles (CATM/DATM) configured on approved OHE, AWSE, or PSE to validate safe handling and movement of weapons to and from selected weapons handling and stowage spaces. This demonstration shall be conducted to validate compliance with the applicable Weapons Handling and Stowage Technical Manual and/or General Arrangement Drawings.

1.8.5.1.10 Out brief. At the conclusion of the COT, NAVSEA SWIT/NAVAIR SWIT shall conduct a critique with the responsible NSA, to be attended by all principal attendees and chaired by the NAVSEA/NAVAIR SWIT COT Coordinator. Discrepancies, not corrected during the course of the COT, shall be itemized. The NSA shall screen (assign for correction) each discrepancy (i.e. to Shipbuilder, NAVSEA, NAVAIR, NSA, TYCOM, or Ship's Force). The NAVSEA/NAVAIR SWIT COT Coordinator shall designate those discrepancies considered major during the critique. The NAVSEA/NAVAIR SWIT COT Coordinator shall also be responsible for coordinating the correction of all discrepancies. Disputed discrepancies shall be screened to the NAVSEA SPM representative for resolution. All discrepancies shall be documented by the NSA Representative and recorded in the Supervisor of Shipbuilding discrepancy tracking system.

1.8.5.1.11 Incomplete Installation. When major items of COT equipment are not available during the testing period, the COT shall be completed to the maximum extent possible. Any incomplete portions shall be noted in the final COT report. The NAVSEA SPM shall coordinate with the SWIT Coordinator and arrange for suitable tests after the missing equipment is installed.

1.8.5.1.12 Reports. The NAVAIR/NAVSEA SWIT COT Coordinator shall submit a COT report within 60 days of completion of the test to the Program Manager (PM). Information copies shall be provided to OPNAV N411, the applicable Program Executive Office (i.e., PEO Aircraft Carriers, PEO Ships, PEO Unmanned Aviation & Weapons, etc.), Commander, Naval Air and/or Sea Systems Command, NAVSEA Technical Authority, NSWCCD-SSES, Fleet Commands, TYCOM, NSA, ship, and principal attendees in electronic format. The report should include digital photographs of all major discrepancies and include a description of all incomplete test events, with recommended resolution indicating whether or not any further design action is required by other Commands or activities. The final report should also identify the NAVSEA/NAVAIR SWIT COT Coordinator as the point of contact.

1.8.5.1.13 Corrective Action Process. Beginning two weeks after completion of the COT, the Shipbuilder shall provide a monthly status report of all discrepancies to the SWIT Coordinator. The Shipbuilder shall indicate any discrepancies that cannot be completed prior to the ship's delivery. The NSA shall monitor the completion of COT discrepancies and provide bi-weekly updates to the SWIT COT Coordinator. All discrepancies not corrected prior to the Shipbuilder Trials shall be forwarded to the Board of Inspection and Survey (INSURV), TYCOM, and the appropriate NAVSEA (SPM) for information. Following delivery of the ship, any remaining COT discrepancies shall be documented on the Ship's Maintenance Action Form and retained in the Consolidated Ships Maintenance Plan (CSMP). Copies shall be forwarded to NSWCCD-SSES Philadelphia (Code 972), Fleet Commands and TYCOMs. NSWCCD-SSES Philadelphia (Code 972) shall track the discrepancies and provide semi-annual status reports to the principal attendees, until their completion or removal from the CSMP.

1.8.5.2 SIAT Process.

1.8.5.2.1 Purpose. A SIAT shall be performed near the end of the availability but shall be accomplished early enough to allow sufficient time for the Installing Activity (IA) to develop a corrective action plan for all major and minor discrepancies and for the TYCOM to validate the corrective action plan prior to the end of the availability.

1.8.5.2.2 Requirements. A SIAT shall be required for all Ship Alterations that directly affect the weapons handling, stowage, assembly, checkout, or strike-up process. This shall include Ship Alter-

ations involving modification to or relocation of weapons handling routes, assembly and stowage areas, weapons handling equipment (such as hoists, forklift trucks, bridge cranes, etc), or weapons stowage process (such as installation of universal deck, batten stow, container tie-downs, etc.). A SIAT shall not be required for Ship Alterations where the weapons handling, stowage, assembly, checkout, and strike-up process have not been affected. A SIAT is not required where ALL of the following conditions have been met:

a. The IA has successfully completed the installation on a previous ship with no Major Discrepancies noted.

b. The Ship Alteration Installation is identical to that of the previous ship.

c. The installation is for a ship of the same Class.

d. The Ship Installation Drawings (SIDs) have been reviewed and approved by the LCM/ISEA (NSWCCD-SSES Philadelphia, Code 972) prior to the installation.

1.8.5.2.3 Implementation. The NSA, responsible for the alteration installation, shall take appropriate action to implement the policies and procedures in this document. Any deviations from this document shall be authorized by NSWCCD-SSES Philadelphia (Code 972). For ship alteration installations performed by Naval Shipyards, the YWT and SIAT shall be entered into the milestone schedule in accordance with NAVSEAINST 4850.10 series. The planning yard shall include the requirement for conducting a SIAT in the overhaul package.

1.8.5.2.4 Notification. The responsible NSA shall send a message to principal activities informing them and requesting participation in a SIAT. Notification will be given at least 30 days prior to the scheduled SIAT. Command representatives will be required to assess the safety and functionality of the ship and its spaces for supporting the intended weapons/weapon systems. Principal participants should include (as a minimum): COMNAVSEASYSCOM, applicable PEO or PMS, COMNAVAIRSYSCOM (PMA 251D7 and 671500D), NAVORDSAFSECACT (Code N7), NSWCCD-SSES Philadelphia (Code 972), NAVSURFWARCEN IHD Detachment Earle, appropriate planning yard, TYCOMs, and the ship). Other information addressees include CNO (N411), NAVAIRWARCENACDIV Lakehurst NJ, and Fleet Commands. Other activities deemed necessary by the NSA or IA may also participate.

1.8.5.2.5 Objective. The SIAT shall demonstrate weapons handling, stowage, breakout, assembly, testing, re-programming, strike-up, ready service, strike-down, disassembly, and/or return to stowage (as applicable) in the area(s) affected by the Ship Alteration. The test must include but shall not be limited to weapons system interfaces such as weapons elevators, hoists, OHE, AWSE, MHE and/or the PSE required for the demonstration. The SIAT shall verify compliance with NAVSEA OP 4, all applicable ship installation drawings, drawing packages and documents pertaining to the applicable Ship Alteration Installation. The objective is to validate the installation and operability of the new and modified weapons handling and stowage system.

1.8.5.2.6 Test Dates. SIAT test dates should be scheduled late enough in the availability to allow completion of all required work, but early enough to allow correction of all SIAT major and minor discrepancies, prior to the end of the availability.

1.8.5.2.7 Planning Yard. The Planning Yard shall provide a person familiar with the weapons related overhaul package to attend the SIAT. The Planning Yard shall take responsibility to provide

technical resolution for design discrepancies assigned during the critique. Naval supervising activities requiring assistance in formulating and conducting a SIAT should request assistance from the planning yard.

1.8.5.2.8 Naval Supervising Activity (NSA).

a. The NSA shall have oversight responsibility for ensuring compliance with the requirements of this manual. The NSA shall ensure proper and timely scheduling of the YWT and the SIAT.

b. The NSA shall provide a weapons inspection check-off list to NAVSEA 05Z44 for approval. The approved weapons inspection check-off list shall be used during the YWT and SIAT. For those systems not completed, the remaining elements and expected date of completion shall be noted on the checklist.

c. The NSA shall direct requests for inert weapons/training shapes, components, and handling equipment for testing affected facilities to NAVAIR Code 671500D or the cognizant weapons engineering support activity, at least 60 days prior to the SIAT. A copy of the request shall be provided to NSWCCD-SSES Philadelphia (Code 972), NAVSEA SWIT (Code N7), NAVAIR (PMA 251D7), NSWC IHD Detachment Earle, Fleet Commands, TYCOMs, and the affected ship. The NSA shall ensure that all equipment and inert weapons are returned via signature service, upon completion of the test requirements. All handling equipment or inert weapons damaged during the tests shall be reported to NAVAIR Code 671500D, the appropriate NAVSEA representative, or the cognizant weapons engineering support activity, as soon as possible.

For CVNs: The NSA shall direct requests for all applicable inert weapons, components, handling equipment and mission pods for testing affected facilities to CNAF for action. This notification process shall be coordinated with CNAF, 120 days prior to the scheduled SIAT. All handling equipment or inert weapons damaged during the tests shall be reported to CNAF, as soon as possible.

1.8.5.2.9 Installing Activity Responsibilities.

a. The IA shall ensure that all equipment, auxiliary services and support systems required for the validation of the affected weapons handling and stowage system installation are fully operational and within current weight test periodicity for the SIAT. This includes weapons elevators, manual and pneumatic hoists, monorails, handling equipment, and all other related items. Weapons handling equipment not affected by alterations or modifications but intended for use during the SIAT shall be in current weight test periodicity to support the SIAT in accordance with NAVSEA SG420-AP-MMA-010. Coordination with Ship's Force and TYCOM is required to ensure equipment availability and serviceability.

b. Modifications to major support equipment/facilities that will affect the SIAT demonstration, such as weapons elevators, handling equipment (both fixed and portable), sprinklers, security systems, ventilation and communications shall be tested by the IA before the SIAT. Prior to the SIAT, documentation shall be presented to the NAVSEA SIAT representative verifying that all required tests have been accomplished. New and modified equipment shall operate in accordance with system operating requirements.

c. The IA shall ensure that all production work, in the areas associated with the demonstration, has been completed prior to the SIAT. Any other production work that could interfere

with the SIAT shall not be permitted during the demonstration. The affected spaces shall be clean and ready prior to demonstration.

d. The IA shall assign a SIAT coordinator.

e. SIAT Coordinator:

(1) The SIAT Coordinator shall be responsible for ensuring compliance with the requirements of this manual. The coordinator shall also be intimately familiar with the weapons handling and stowage system modifications and the support equipment and support systems required for the SIAT.

(2) The SIAT coordinator shall prepare a SIAT test plan and test procedures for each affected installation. A copy of the test plan shall be provided to the appropriate NAVSEA Technical Authority 30 days prior to commencement of the SIAT. The SIAT test plan and procedures shall be provided to each principal Attendee 10 days prior to commencement of the SIAT.

(3) The SIAT Coordinator shall ensure that all inert weapons, weapons cradles, containers, wings, fins, sonobuoys, gun loaders, handling equipment, and other items scheduled to be handled are on board the ship prior to the start of the SIAT. All necessary strongbacks, hoists, forklift trucks, skids, and other handling equipment shall also be available and in operating condition. All weight handling equipment must have current load test tags installed, in accordance with NAVSEA SG420-AP-MMA-010.

(4) The SIAT Coordinator shall schedule the YWT. The intent of the YWT is to validate that the weapons handling and stowage system Ship Alteration being installed complies with all design requirements. It reduces unnecessary cost to the government and contractor by identifying major discrepancies and/or design flaws early in the installation process, to ensure satisfactory SIAT results. The YWT should be conducted at a point in the Ship Alteration process that affords visual inspection of the facilities to ensure that they meet design requirements. It should be done early enough in the process to allow correction of as many discrepancies as possible prior to the SIAT and to ensure that the shipboard installation is ready for the SIAT. The YWT shall be conducted on each testable, self-sufficient part of affected installation, as soon as possible after completion of work, in order to identify and correct discrepancies prior to the SIAT. NAVSEA Headquarters (SPM/SAM/SDM), NSWCCD-SSES Philadelphia (Code 972), NAVSEA SWIT (Code N7), NAVAIR (PMA 251D7, 671500D), NSWC IHD Detachment Earle, and TYCOM shall be notified of tentative dates of walkthroughs involving weapons handling and stowage functions. Firm dates shall be provided at least 7 days prior to YWT.

1.8.5.2.10 Ship Force. Ship's Force shall receive a safety brief from the TYCOM and SWIT representatives and be indoctrinated in the overall operation of new or modified weapons handling and stowage equipment, prior to the SIAT. Unless otherwise required by contract, Ship's Force, under the guidance of the IA personnel, shall operate the stowage and handling equipment, including weapons elevators, in accordance with appropriate safety regulations, manuals, and operating procedures.

1.8.5.2.11 Discrepancies. NSA and a TYCOM representative shall verify the correction of all major and minor discrepancies. All safety related discrepancies, as well as discrepancies that prohibit

the weapon or weapon system from functioning as it was designed and intended, shall be recorded as major discrepancies. Failure to comply with general or special testing requirements required by installation drawings, specifications, or directives may be recorded as a major discrepancy. Any major discrepancy not corrected by the IA shall be reported and listed in the SIAT Report as unsatisfactory. In the event of a disputed major discrepancy, the IA shall request adjudication from NAVSEA. Minor discrepancies, not corrected prior to the completion of the availability, shall be documented in the Final SIAT report and entered into the ship's CSMP. These discrepancies shall be documented on OPNAV FORM 4790/2K.

1.8.5.2.12 Documentation, Tests and Demonstrations. Preliminary technical manual changes and revisions, ILS support and Ship Installation Drawings (SIDs) shall be complete and available upon request. All tests shall be conducted and supervised by the IA and supported by Ship's Force. The SIAT demonstrations shall include the worst-case weapons configurations or configurations with unusual handling, stowage or breakout problems as identified by NSWCCD-SSES Philadelphia (972), NAVSEA SWIT (Code N7), NAVAIR (PMA 251D7, 671500D), NSWC IHD Detachment Earle, Fleet Commands or TYCOMs. Visitor participation will be restricted to observing the demonstration, providing technical assistance, and reporting discrepancies to the SIAT Coordinator. A SIAT shall not be conducted in different phases except by specific permission of the NAVSEA SPM/SAM. All parts of the SIAT shall be conducted consecutively without interruption except for weekends and holidays. The following tests and demonstrations shall be conducted:

a. Weapons elevators: All new or modified weapons elevators or elevators that interface with the weapons stowage and handling modifications shall be demonstrated to show satisfactory operation. All test documentation, including the Systems Operability Test (SOT) Level III, shall be completed. For identification of applicable SOT Level IIIs and technical manuals, contact NSWCCD-SSES Philadelphia Code 972 or the applicable planning yard. All elevator grooming and all hot work shall be completed prior to the SIAT.

b. Modified or new weapons spaces: Modified or new weapons handling, stowage, buildup/assembly, and transfer spaces shall be checked for completeness and weapons fit, utilizing actual stowage containers and inert shapes. Fit tests, by use of weapons or containers/packaging dimensions, in lieu of actual stowage containers and inert shapes, will be held to a minimum.

c. Modified or new inert component stowage areas: Handling and stowage of inert components such as bomb tail fins, missile wings and fins, sonobuoys, launch and handling equipment, etc., shall be demonstrated.

d. Modified or new weapons assembly areas: Weapons assembly shall be demonstrated in compartments with new or modified weapons assembly installations. All related assembly operations shall be performed in accordance with the applicable weapon assembly technical manual, with the weapons in ready-service configuration.

e. Second Deck transfer route (applicable CVN only): The second deck handling route between the forward and aft weapons handling areas shall be demonstrated for individual weapon containers using approved handling systems. Only the largest weapons loads need to be demonstrated. However, this demonstration should only be conducted during the ship's service life when:

(1) New or modified, large-dimension weapons loads are introduced;

(2) Weapons handling passageways, doorways or adjacent areas are modified or refurbished.

NOTE

Obstructions to clear movement of weapons shall be documented as discrepancies and removed at the earliest opportunity.

f. New or modified weapons test and maintenance area: Inert weapons shall be transported into and out of compartments that have been modified for testing or maintenance. Simulated tests will be performed on these weapons to demonstrate the availability of all-necessary equipment and services such as special tools, test stands, electric power, nitrogen, and compressed air.

g. New or modified Aviation Ordnance Shops: For new or modified Aviation Ordnance Shops, simulated maintenance operations on ordnance equipment (e.g. launchers, ejector racks, gun systems, etc.) shall be performed to demonstrate the availability of all-necessary equipment and services.

h. New or modified Miscellaneous and Ready Service Ammunition Lockers: All new or modified miscellaneous and Ready Service ammunition lockers shall be inspected for completeness and ammunition fit as well as compliance with NAVSEA approved drawings. Lockers shall be inspected for proper preservation and installation of sunscreens and thermometers. If the lockers are jettison-able, the jettison feature shall also be inspected using proper procedures.

i. New or modified Magazine Sprinkler Systems: All new or modified magazine sprinkler systems shall be checked for compliance with NAVSEA SG420-AP-MMA-010. Sprinkling system check-sheets, NAVSEA S9522-AA-HBK-010 shall be complete and available upon request.

j. New or modified HVAC System: All new or modified HVAC systems for weapons magazines and other weapons buildup/assembly, handling, transfer, test, and maintenance areas shall be checked for compliance with the applicable HVAC Design Criteria Manual.

k. New installations or modifications to existing installations affecting Weapons Handling Routes: A demonstration shall be conducted with inert weapons, training shapes, and/or approved CATM/DATM configurations using authorized OHE, AWSE, or PSE to validate safe handling and movement of weapons to, from, and/or through the new or modified space(s). This demonstration shall be conducted utilizing the appropriate technical manuals/instructions, as well as Ship Installation Drawings (SIDs).

1.8.5.2.13 Out brief. At the conclusion of the SIAT the SIAT Lead will work with the NSA for scheduling an Out brief to discuss the findings and corrective measures needed. Prior to the Out brief, the SIAT and NSA will review all findings and assign an interim classification of major or minor to them and determine if they are/are not SIAT related. During the Out brief, the SWIT Lead will review the SIAT findings with all attending stakeholders (e.g., SPM, PFS, TWH, NSA, IA, Fleet Commands, TYCOMs, Immediate Supervisor in Charge (ISIC), and ship's crew). Discrepancies not corrected during the course of the SIAT shall be itemized and incorporated into the CSMP by the NSA and screened (assign for correction) to a designated activity (i.e. to IA, NAVSEA, NAVAIR, NSA, TYCOM or CNSF, or Ship's Force) for resolution. The SIAT Lead is responsible for coordinating the correction of all discrepancies related to the Ship Alteration installation. Any disputed discrepancy will be screened to the appropriate NAVSEA Technical Authority for resolution.

1.8.5.2.14 Incomplete Installation. When major items of SIAT equipment are not available during the testing period, the SIAT shall be completed to the maximum extent possible. Incomplete portions shall be noted in the final SIAT report. The PM shall work with the SWIT Coordinator and arrange for suitable tests after the missing equipment is installed.

1.8.5.2.15 Reports. Following the completion of the SIAT the NSA will provide a minimum of two reports:

a. Initial SIAT Results. Within 7 days of the SIAT, the NSA will report, via Naval message, the results of the SIAT as briefed by the SWIT Lead. Prior to report submission, the NSA should attempt to qualify all findings as either major or minor. Final classification of findings will be made by the appropriate Technical Warrant Holder and/or Safety Office. The report serves as a heads up notification of problem areas which may require re-design or additional resources to correct. The report will be provided to the appropriate Systems Command Program Office (PM and PFS) with information copies provided to the Fleet Commands, TYCOMs, SWIT (NAVAIR and NAVSEA), NSWCCD-SSES Philadelphia, contractor, and IA.

b. SIAT Status Update Report. Within 60 days, the NSA will provide the Program Office with the status action taken to correct major and minor findings. The report can be communicated via official Naval correspondence (Naval message or official letter) and will INFO other applicable activities as necessary but as a minimum; COMNAVSEASYSCOM, NSWCCD-SSES Philadelphia, COMNAVAIRSYSCOM, Fleet Commands, TYCOMs, Ship Class Squadron, Immediate Supervisor in Command, IA and ship.

c. SIAT Subsequent (Status and Completion) Reports. The NSA will continue to provide status reports until all findings have been either completed, processed/scheduled for completion at a later date (availability period and/or SHIPALT), or if considered as an acceptable mission/safety risk. A final report of the SIAT will be sent using electronic format (to include digital photographs or corrective action) to NSWCCD-SSES Philadelphia (Code 972). The Final SIAT Report will also include all incomplete items, with a recommended action for resolution. The report shall also indicate where/when further design or action by other Commands or activities is required. For findings that can not be corrected and accepted as an operational or safety risk will require the Program Office to submit a letter to CNO (N411) acknowledging the risk being taken and why the corrective action could not be completed. Copies of the letter will be forwarded to COMNAVSEASYSCOM (applicable Technical Warrant Holders), COMNAVAIRSYSCOM (if applicable), NSWCCD-SSES Philadelphia, Fleet Commands, appropriate TYCOM, ISIC and the ship.

d. Corrective Action Process. All discrepancies not corrected prior to completion of the availability shall be documented on the Ship's Maintenance Action Form, OPNAVFORM 4790/2K, in the correct format, and shall be submitted to the ship for entry into the CSMP. Copies shall be forwarded to NSWCCD-SSES Philadelphia (Code 972), NAVSEA SWIT (Code N7), and TYCOM. NSWCCD-SSES Philadelphia (Code 972) shall track the discrepancies and provide semi-annual status reports to the principal attendees, until their completion or removal from the CSMP.

SECTION 2

Classification and Assignment of Maintenance Functions and Responsibilities

Table of Contents

Chapter	Subject	Page
2.1	Introduction	2-1-1
2.2	Classification of Organizational, Intermediate, and Depot Level Ordnance Maintenance Functions	2-2-1
2.3	Assignment of Ordnance Maintenance Responsibilities	2-3-1

CHAPTER 2.1

Introduction

Table of Contents

Paragraph	Subject	Page
2.1.1	General	2-1-1
2.1.2	Purpose and Scope	2-1-1
2.1.3	Maintenance Concepts	2-1-1
2.1.4	Asset Readiness	2-1-1
2.1.5	Mission Readiness	2-1-2
2.1.6	Defense Security Assistance Program	2-1-2

CHAPTER 2.1

Introduction

2.1.1 General. This section addresses the classification of maintenance functions and assignment of responsibilities for ordnance maintenance. Chapter 2.2 defines Organizational, Intermediate, and Depot level ordnance maintenance functions and Chapter 2.3 assigns responsibilities for ordnance maintenance.

2.1.2 Purpose and Scope. This section addresses the integrated logistics support effort for airborne weapons, surface and sub-surface launched versions of weapons and defines the maintenance process involved.

2.1.3 Maintenance Concepts.

2.1.3.1 As weapons become more complex and expensive and maintenance resources decrease, the need to manage the integrated logistics support process for weapons increases. The process of weapons maintenance is evolving and lessons learned are adding to the integrated logistics support process. The Organizational, Intermediate, or Depot level maintenance activity must have a clear, concise definition of its maintenance functions and responsibilities to avoid unnecessary duplication of workloads. Considerations for manpower, facility size, workload capacity, and cost effectiveness must be taken into account to successfully manage our limited maintenance resources.

2.1.3.2 The All-Up-Round (AUR) maintenance concept was implemented in 1976. That concept increased asset readiness, reduced cost, and eased the maintenance workload. Presently, the concept of competition between organic and commercial maintenance activities is being encouraged as a means of keeping the cost of weapons maintenance down, reducing the manpower requirements, and shortening the maintenance repair time.

2.1.4 Asset Readiness.

2.1.4.1 Policies, procedures, and maintenance processes defined in the Naval Ordnance Management Policy (NOMP) respond to the Chief of Naval Operations (CNO) asset readiness objectives and to Fleet operational requirements. The asset readiness objective is the goal to be achieved and maintained. Asset readiness objectives are derived from the inventory objectives, developed using the Non-Nuclear Ordnance Requirements (NNOR) model as prescribed by OPNAVINST 8011.9 series. This model determines requirements based on many factors, one of which is the maintenance pipeline. Asset readiness is expressed as the ratio (in percentage) of serviceable items, not in the maintenance pipeline, to the total number of assets in the inventory.

2.1.4.2 Workload planning and programming of weapons quantitative maintenance workloads at shore-based maintenance facilities is predicated on the achievement of published CNO asset readiness objectives and ship fill requirements during each fiscal year.

2.1.4.3 Activities responsible for preparing Program Objective Memorandum (POM)/budget and baseline assessment submissions for rework of Naval conventional ordnance shall program

for maintenance of total projected unserviceable assets in Ordnance Information System (OIS) reported in-bin inventory. This shall not exceed the total requirement published in the current NNOR or the constrained NNOR whichever is the greater. Those items not normally included in the NNOR such as gun ammunition shall have maintenance requirements based on a documented baseline such as shipfill, combat consumption, training pipeline or component attrition/failure.

2.1.4.4 The programmed maintenance requirement shall be consistent with engineered maintenance interval expirations and aviation ordnance captive carry policy.

2.1.4.5 Maintenance will not be funded for ordnance with ready-for-issue inventory in excess of NNOR levels or other documented baseline requirements for non-NNOR items. Unfunded maintenance requirements will be carried forward and phased into out year workload planning/budgeting.

2.1.4.6 Some ordnance items are removed from the NNOR and replaced with improved or advanced variants. Requirements for newer variants normally cannot be met by initial production. In this event, maintenance of legacy ordnance items shall be funded to meet constrained requirements as preferred ordnance inventories ramp up to meet requirements.

2.1.4.7 Program Managers (PMs) with weapons that are covered by manufacturer's warranty that have no repair capability organic to the Navy must POM/budget for the out-of-warranty costs for maintenance by the manufacturer.

2.1.5 Mission Readiness. Fulfillment of Fleet operational objectives is measured through use of the mission readiness percentage. Mission readiness is computed using the ratio of total serviceable units to the quantity required to meet the planning objective.

2.1.6 Defense Security Assistance Program.

2.1.6.1 Military assistance is provided to eligible countries in the form of Foreign Military Sales (FMS) and Grant Aid. The objective of FMS and Grant Aid programs is to furnish military forces of eligible countries with appropriate defensive equipment and supporting material, including services, and, in the case of FMS, to contribute toward a favorable balance of payments.

2.1.6.2 Unlike Grant Aid programs, FMS agreements commit the government to delivery schedules and require the foreign countries to commit funds. All large FMS programs involve political factors which make any deviation from agreed commitments undesirable.

2.1.6.3 The Commander, Naval Air Systems Command (COMNAVAIRSYSCOM) has been tasked with extensive responsibilities in support of the FMS and Grant Aid programs. Recipient countries request COMNAVAIRSYSCOM to directly provide the coordination required, particularly before and during initial deployment. COMNAVAIRSYSCOM is responsible for providing ordnance logistics support, services, and management.

2.1.6.4 COMNAVAIRSYSCOM is responsible for planning, programming, and assuring the funding of intermediate and depot level repair and retrofit programs and of the replacement-in-kind program whereby the Navy is committed to upgrade FMS country assets by providing exchange missiles or components thereof on a one-for-one basis. The replacement-in-kind pro-

gram effectively replaces older Navy missiles or components with the most recent models and provides the replaced components to FMS countries. In order to maintain the Navy planning objective, it is essential that these exchanges take place simultaneously and that OIS records are updated accordingly.

CHAPTER 2.2

Classification of Organizational, Intermediate, and Depot Level Ordnance Maintenance Functions

Table of Contents

Paragraph	Subject	Page
2.2.1	General	2-2-1
2.2.2	Maintenance Functions	2-2-1
2.2.3	Air Launched Weapon Systems Maintenance Functions	2-2-1
2.2.4	Cartridges/Cartridge Actuated Devices/Propellent Actuated Devices/Pyrotechnics for Aviation Life Support Systems Maintenance Functions	2-2-5
2.2.5	Armament Weapons Support Equipment Maintenance Functions	2-2-5
2.2.6	Missile Target Equipment Maintenance Functions	2-2-8
2.2.7	Aircraft Armament Equipment	2-2-8
2.2.8	Aircraft Gun Systems, Airborne Crew Served Weapons, Laser Aiming Devices and Associated Equipment	2-2-8

List of Illustrations

Figure	Title	Page
2-2-1	Maintenance Functions Applicable to Air Launched Missiles	2-2-2
2-2-2	Maintenance Functions Applicable to Free-Fall Bombs, Cluster Bombs, Pyrotechnics, Rockets/Rocket Launchers, and Rocket/JATO	2-2-3
2-2-3	Maintenance Functions Applicable to Cartridges/CADs/PADs/Pyrotechnics for ALSS	2-2-6
2-2-4	Maintenance Functions Applicable to Armament Support Equipment	2-2-6

List of Illustrations - contd.

Figure	Title	Page
2-2-5	Maintenance Functions Applicable to Weapons Support Equipment	2-2-7
2-2-6	Maintenance Functions Applicable to Logistics Support Equipment (EE Forklift Trucks and EE Electric Pallet Trucks)	2-2-9
2-2-7	Maintenance Functions Applicable to Aerial Target Equipment	2-2-10
2-2-8	Maintenance Functions Applicable to Aircraft Armament Equipment	2-2-10
2-2-9	Maintenance Functions Applicable to Aircraft Guns and Associated Equipment	2-2-11

CHAPTER 2.2

Classification of Organizational, Intermediate, and Depot Level Ordnance Maintenance Functions

2.2.1 General. This chapter lists the ordnance maintenance functions assigned to Organizational, Intermediate, and Depot level maintenance activities. Assignment of individual ordnance maintenance functions to a maintenance level allows most ordnance maintenance activities to further determine the specific tasks they are required to perform. To determine the extent to which a repair task can be undertaken, the ordnance maintenance activity must consult the appropriate maintenance instruction, operating and service instruction manual, or technical directive that pertains to each supported weapon system or component.

2.2.2 Maintenance Functions.

2.2.2.1 The three level maintenance concept is fundamental to the ordnance community and is designed to place maintenance functions at the activity that is most suited to perform those maintenance functions based on operational needs, fiscal constraints, and other planning factors. The Organizational level (O-level) is that level of maintenance that is normally the responsibility of and performed by a using organization on its assigned systems, equipment, and material. The Intermediate level (I-level) is that level of maintenance that is normally the responsibility of and performed by designated maintenance activities in direct support of the using organizations. The Depot level (D-level) is that level of maintenance supporting the organizational and intermediate levels by performing maintenance which is beyond their responsibility or capability and providing technical assistance.

2.2.2.2 Functions assigned here identify the lowest maintenance level at which a task may normally be performed. However, higher level maintenance activities may be assigned lower level functions. For example, preoperational, daily, and post operational inspections of organizational level equipment used by an intermediate level activity. Additionally, lower level maintenance activities may be tasked to perform higher level maintenance functions in support of a particular weapon system, component, or item of equipment. D-level maintenance will only be performed by those activities designated herein unless the CNO approves a deviation request, forwarded via the chain of command.

2.2.2.3 Functional definitions contained in this chapter are used to identify support equipment, tools, and material as well as technical manual data. Allowance lists for support equipment, tools, and material reflect the assigned maintenance level. Although a specific function may be assigned to weapons I-level maintenance, it does not mean that all weapons I-level maintenance activities are outfitted to perform this function.

2.2.3 Air Launched Weapon Systems Maintenance Functions. Maintenance functions for air launched missiles are listed in Figure 2-2-1; those for bombs, rockets, and pyrotechnics, are listed in Figure 2-2-2 and Volume II, Section 2 of this manual.

ORGANIZATIONAL	INTERMEDIATE	DEPOT
Visual inspection (special, conditional, preflight, and postflight). Preflight on-aircraft functional test. Compliance with NARs/AINs. Compliance with TDs. Deficiency Reporting. Corrosion Control and Prevention. Captive carry reporting. Missile firing reporting.	Visual inspection (special, conditional, and breakout). Breakout, strikeup, and strikedown from/to magazines. Corrosion control, prevention, treatment and repainting. Visual inspection of containers and cradles. Compliance with NARs/AINs. Compliance with TDs. Reprogramming and Built In Test (BIT). All-up-round and section testing. Deficiency Reporting. Captive carry data collection. Containers Repair and Corrosion Control.	Visual inspection (special, conditional, and breakout). All-up-round assembly and disassembly. All-up-round and section testing. Fault isolation to the section level (including disassembly and assembly). Section repair (guidance and control). Replacement of warhead components (fuzes and booster, safe/arm devices, firing switches, etc.). Replacement of rocket motor components (igniters, exit cones, nozzles, and safe/arm devices). Visual inspection and refurbishment of containers and cradles. Paint touchup and cleaning. Compliance with NARs/AINs. Compliance with TDs. Component X-ray. Deficiency Reporting.

Figure 2-2-1. Maintenance Functions Applicable to Air Launched Missiles

ORGANIZATIONAL	INTERMEDIATE	DEPOT
FREE-FALL AND CLUSTER BOMBS		
Breakout, visual inspection, preparation for loading. Upload and download from operational commitments. Compliance with NARs/AINs. Compliance with TDs. Deficiency Reporting.	Packaging and palletizing weapons, components, and rounds. Breakout, installing components, and visual inspection. Strikeup and strikedown from operational commitments. Container inspections. Cleaning and painting. Compliance with TDs. Compliance with NARs/AINs. Performing BIT and Reprogramming (software upgrades) with test support equipment, such as the common munitions BIT and Reprogramming equipment (CMBRE). Deficiency Reporting.	Receiving inspection. Repair and patch thermal coating of general-purpose bombs. Painting and corrosion control. Testing and replacement of cluster bomb components. Compliance with TDs. Compliance with NARs/AINs. Deficiency Reporting.
PYROTECHNICS		
Breakout, visual inspection, and preparation for loading. Compliance with NARs/AINs. Compliance with TDs. Upload and download from operational commitments. Deficiency Reporting. Preloading dispensers.	Packaging and/or palletizing complete round or components. Strikeup and strikedown from operational commitments. Compliance with TDs. Compliance with NARs/AINs. Deficiency Reporting.	Receiving inspection. Storage and shipment. Compliance with TDs. Compliance with NARs/AINs. Deficiency Reporting.

Figure 2-2-2. Maintenance Functions Applicable to Free-Fall Bombs, Cluster Bombs, Pyrotechnics, Rockets/Rocket Launchers, and Rocket/JATO

ORGANIZATIONAL	INTERMEDIATE	DEPOT
ROCKETS AND ROCKET LAUNCHERS		
Packaging and palletizing. Breakout and visual inspection. Mechanical and electrical testing. Compliance with NARs and TDs. Upload and download from operational commitments. Preloading dispensers. Rocket loading and unloading. Deficiency Reporting.	Packaging and palletizing. Breakout and visual inspection. Mechanical and electrical testing. Compliance with NARs and TDs. Strikeup and strikedown from operational commitments. Rocket loading into/from launchers. Deficiency Reporting.	Receiving inspection. Repair and patch thermal coating of Rocket Launchers. Painting and corrosion control. Compliance with TDs. Compliance with NARs/AINs. Deficiency Reporting.
ROCKETS/JET ASSISTED TAKEOFF		
Upload and download from operational commitments. Packaging and palletizing complete components. Breakout, installing components, visual inspection, and load. Compliance with NARs/AINs. Compliance with TDs. Deficiency Reporting.	Strikeup and strikedown from operational commitments. Packaging and palletizing complete components. Breakout, installing components, visual inspection. Compliance with NARs/AINs. Compliance with TDs. Deficiency Reporting.	Receiving inspection. Painting and corrosion control. Compliance with NARs/AINs and TDs. Replacing worn defective parts, and repairing damaged components. Component X-ray. Deficiency Reporting.

Figure 2-2-2. Maintenance Functions Applicable to Free-Fall Bombs, Cluster Bombs, Pyrotechnics, Rockets/Rocket Launchers, and Rocket/JATO - contd.

2.2.4 Cartridges/Cartridge Actuated Devices/Propellent Actuated Devices/Pyrotechnics for Aviation Life Support Systems Maintenance Functions. The functions listed in Figure 2-2-3 are general and apply regardless of installation. Notices of Ammunition Reclassification (NARs) are issued by the Naval Supply Systems Command Global Logistics Support (NAVSUP GLS AMMO) and apply to all levels of maintenance. NARs are not an authorized medium for directing or authorizing the removal or replacement of aircraft-installed Cartridges/Cartridge Actuated Devices (CADs)/Propellent Actuated Devices (PADs)/Pyrotechnics used in Aviation Life Support Systems (ALSS) or affecting aircraft operational availability. The Technical Directive (TD) system was established for that purpose. If an attendant TD has not been issued within 3 days of receipt of a NAR (affecting Cartridges/CADs/PADs/Pyrotechnics used in ALSS, aircraft, or availability), all aircraft controlling custodians or Type Commanders (TYCOMs) shall request TD status from the Commander, Naval Air Systems Command.

2.2.5 Armament Weapons Support Equipment Maintenance Functions.

2.2.5.1 For the purpose of classifying maintenance functions, support equipment is defined as all equipment required on the ground to make an aeronautical system, support system, subsystem, or end item of equipment operational in its intended environment.

2.2.5.2 Armament Weapons Support Equipment (AWSE) is categorized as common (general purpose) and peculiar (specific purpose) and is further divided into the following categories.

2.2.5.2.1 Armament Support Equipment (ASE) includes all equipment whose primary function is support of aircraft-installed armament systems and is used primarily by the aircraft squadron. ASE is assigned to the Aircraft Intermediate Maintenance Department/Fleet Readiness Center (AIMD/FRC), Marine Aviation Logistics Squadrons (MALS) and the squadron per the allowances contained in the appropriate activities Individual Material Readiness List (IMRL) and authorized for use in the appropriate aircraft stores loading manual. Examples of this type of equipment are bomb hoisting units (HLU-196), bands, bars, slings, trolleys, LALS I/II, and adapters used to upload/download aircraft stores and aircraft installed gun systems. Squadrons perform organizational maintenance and the AIMD/FRC and MALS perform intermediate maintenance on ASE as discussed throughout this manual. Maintenance functions are listed in Figure 2-2-4.

2.2.5.2.2 Weapons Support Equipment (WSE) includes all equipment whose primary function is the handling and transportation of aircraft stores and is essentially used by the Weapons Department afloat and NMC Detachments ashore. WSE is managed by the AIMD/FRC per the guidance in the Naval Aviation Maintenance Program (NAMP) instruction and the allowances contained in the IMRL, and sub-custodied to the Weapons Department and NMC Detachment through the AIMD/FRC IMRL manager. Examples of this type equipment are weapons transporters, skids, slings, strongbacks, carriers, bomb assembly stands, beams, trailers, air purifier units, shipboard manual and pneumatic hoist, shipboard bridge cranes, NAVSEA cognizance Materials Handling Equipment (MHE) and ordnance handling equipment, related maintenance equipment, and weapons test and reprogramming equipment specifically designed or authorized for support of a particular weapon and authorized in OP 2173, NAVAIR 11-140-25 and NAVAIR 11-140 manuals. The Weapons Departments and NMC Detachments perform organizational level maintenance and the AIMD/FRC provides supporting I-level maintenance. The squadron performs organizational maintenance and the MALS performs intermediate maintenance on WSE. Maintenance functions are listed in Figure 2-2-5 and further defined in Volume II, Chapter 8-1.

ORGANIZATIONAL	INTERMEDIATE	DEPOT
Breakout and visual inspection. Installation and removal in parent rack. Compliance with NARs and TDs. Deficiency Reporting.	Breakout and visual inspection. Installation and removal in parent rack. Compliance with NARs and TDs. Deficiency Reporting.	Breakout and visual inspection. Installation and removal in parent rack. Compliance with NARs/AINs. Deficiency Reporting.

Figure 2-2-3. Maintenance Functions Applicable to Cartridges/ CADs/PADs/Pyrotechnics for ALSS

ORGANIZATIONAL	INTERMEDIATE	DEPOT
Daily, situational, conditional, and pre-operational inspections applicable to the Aviation 3M system. Servicing (includes air, fluids and grease). Preventative maintenance including corrosion prevention. Equipment configuration. Deficiency reporting. Maintenance data reporting. Allowance and inventory reporting. Equipment records. Preservation categories A, B, and C. Compliance with TDs.	Acceptance, special, periodic, and pre-use inspections. Preservation categories A, B, and C. Overhaul components. Calibration. Adjusting, removing, or replacing component parts and subassemblies. Fabrication of replacement parts. Corrosion prevention control. Metal and machine work. Welding and soldering. Hydraulic systems (flush cleaning, purging, and sampling). Examination and testing (magnetic, fluorescent, dye-penetrant and X-ray). Nondestructive inspection (includes visual) optical, liquid penetrant, magnetic particle, eddy current, ultrasonic, and radiographic inspections. Inventory control and reporting. Compliance with TDs (support equipment bulletin/support equipment change). Deficiency reporting. Weight test.	Depot activities perform basically all intermediate functions in addition to the following: Preservation categories A, B, and C. Metal work (pressing). Welding and soldering (electric spot, seam, and roll). Heat treating and baking. Deficiency reporting. Hardness test. Magnetic perturbation and leakage. Compliance with TDs (support equipment bulletin/support equipment change).

Figure 2-2-4. Maintenance Functions Applicable to Armament Support Equipment

ORGANIZATION SQUADRON	ORGANIZATION WEAPONS DEPARTMENT AND NMC DETACHMENTS	INTERMEDIATE (AIMD/FRC)	DEPOT
Daily, situational, conditional, and pre-operational inspections applicable to the aviation and surface 3M systems. Servicing (includes air, fluids and grease). Preventative maintenance including corrosion prevention. Equipment configuration. Deficiency reporting. Maintenance data reporting. Allowance and inventory reporting. Equipment reports, preservation categories A, B, and C. Compliance with technical directives.	Daily, situational, conditional, and pre-operational inspections applicable to the aviation and surface 3M systems. SE and launcher air-nitrogen receiver servicing. (NOTE 1) Periodic preventative maintenance (including corrosion prevention). Unscheduled on-equipment maintenance and repair. Equipment configuration. Deficiency reporting. Maintenance data reporting. Allowance and inventory reporting. Equipment records, preservation categories A, B, and C. Compliance with technical directives. Weight test.	Acceptance, special, periodic, and pre-use inspections. Preservation categories A, B, and C. Overhaul components. Calibration. Adjusting, removing, or replacing component parts and subassemblies, fabrication of replacement parts. Corrosion prevention control. Metal and machine work. Welding and soldering. Hydraulic systems (flush cleaning, purging, and sampling). Examination and testing (magnetic, fluorescent, dye penetrant, and X-ray). Nondestructive inspection (includes visual) optical, liquid penetrant, magnetic particle, eddy current, ultrasonic, and radiographic inspections. Inventory control and reporting. Deficiency reporting. Compliance with TDs (support equipment bulletin/support equipment change). Weight test (AIMD/SIMA).	Depot activities perform basically all intermediate functions in addition to the following: Preservation categories A, B, and C. Metal work (pressing). Welding and soldering (electric spot, seam, and roll). Heat treating and baking. Hardness test. Magnetic perturbation and leakage. Compliance with TDs (Support Equipment Bulletin/Support Equipment Change). Deficiency Reporting.

NOTE:

1. This function will be performed by the FRC ashore.

Figure 2-2-5. Maintenance Functions Applicable to Weapons Support Equipment

2.2.5.2.3 Logistics Support Equipment (LSE) includes multi-purpose non-aviation equipment used ashore and afloat for containerized/packaged weapons handling. Examples of this equipment are electric (EE) forklift trucks, electric pallet trucks, manual pallet trucks, and diesel forklift trucks referred to as MHE. MHE is under the cognizance of NAVSUPSYSCOM and managed by NAVSUP WSS Mechanicsburg through the local Inventory Control Point (ICP). NAVSUP GLS AMMO Mechanicsburg promulgates allowances to the activity Supply Officer (Ashore). For ships, the allowances are promulgated in Coordinated Shipboard Allowance List (COSAL) Allowance Equipage Lists (AELs) On CVNs the Weapons Department perform I-level maintenance on LSE, except diesel forklift trucks that are maintained by the AIMD. On amphibious ships the AIMD performs I-level maintenance on LSE except on LPDs, it is the responsibility of the engineering department. For Navy activities ashore, the supporting public works department performs LSE I-level maintenance. Other multi-purpose LSE such as commercial trucks, mobile and fixed cranes, and facility installed cranes and supporting hoist used by the Weapons Department and NMC Detachments for weapon handling and transportation are maintained by the supporting Public Works Department. Allowances of commercial trucks and mobile/fixed cranes are promulgated by Naval Facilities Engineering Command (NAVFACENGCOM). Allowances for facility installed cranes and hoists are not allowanced, but are part of the shore activity organizational equipment. Maintenance functions are listed in Figure 2-2-6.

2.2.6 Missile Target Equipment Maintenance Functions. The general classification in paragraph 2.2.1 governing assignment and classification of airborne armament maintenance functions is applicable to missile targets. However, because of the unique characteristics inherent in target design, operation, and service life, all missile target operating activities are designated as Organizational or Intermediate level activities. Maintenance functions are listed in Figure 2-2-7.

2.2.7 Aircraft Armament Equipment. Aircraft Armament Equipment (AAE) includes all equipment that is designed to suspend, release, and launch ordnance from an aircraft. The maintenance, including calibration, inventory control, and reporting, of AAE is an integral part of the task of maintaining ordnance systems. Maintenance functions assigned to those levels are listed in Figure 2-2-8 and are discussed in Volume II, Section 7.

2.2.8 Aircraft Gun Systems, Airborne Crew Served Weapons, Laser Aiming Devices and Associated Equipment. Aircraft Gun Systems (AGS), Airborne Crew Served Weapons (ACSW), Laser Aiming Devices (LAD) and associated equipment maintenance functions assigned to those levels are listed in Figure 2-2-9 and are discussed in Volume II, Section 3.

NOTE

For maintenance data reporting policy and procedure see Volume I, Chapter 11 of this manual, COMNAVAIRFORINST 4790.2 series and OPNAVINST 4790.4 series.

ORGANIZATIONAL (OPERATOR, SHORE ACTIVITY WEAPONS DEPARTMENT AND NMC DETACHMENTS)	INTERMEDIATE SHIPS WEAPONS DEPARTMENT	DEPOT
Daily, situational, conditional, and pre-operational inspections applicable to the aviation and surface 3M systems (MRC and NAVSEA SW023-AHWHM-010). Servicing (fluids). Weight test verification. Preventative maintenance including: Corrosion prevention. Equipment configuration. Deficiency/defect reporting. Maintenance data reporting. Inventory reporting. Equipment records. Compliance with technical directives. Deficiency reporting. Charge and service batteries.	Daily, situational, conditional, and pre-operational inspections applicable to the aviation and surface 3M systems (MRC, and NAVSEA SW023-AHWHM-010 and vendor technical manuals). Servicing (includes fluids and grease). Periodic preventative maintenance including corrosion prevention. Safety certification (NAVSEA SW023-AH-WHM-010 and vendor technical manuals). Weight test. Charge and service batteries. Unscheduled on-equipment maintenance and repair. Unscheduled on/off-equipment maintenance and repair (afloat and SIMA). Hydraulic system flush, clean, purge, restore. Equipment configuration. Maintenance data reporting. Allowance and inventory reporting. Equipment records. Preservation categories A, B, and C. Compliance with technical directives. Deficiency reporting.	Complete overhaul of the frame, components and sub-components during the 10 - 12 year NAVSUP Service Life Extension Program (SLEP). Compliance with technical directives. Deficiency reporting.

Figure 2-2-6. Maintenance Functions Applicable to Logistics Support Equipment (EE Forklift Trucks and EE Electric Pallet Trucks)

ORGANIZATIONAL	INTERMEDIATE	DEPOT
Inspection (prelaunch, postlaunch, conditional, acceptance and initial buildup). Compliance with TDs. Deficiency reporting. Removal and installation of components. Servicing and/or any corrective actions.	Inspection of peculiar support equipment (preoperational and calendar). Inspection (calendar). Inspection (removed components, bench check, and test required). Servicing. Removal and replacement of strainers, filters, fasteners, safety wire, etc. Removal and installation of components. Compliance with TDs. Deficiency reporting.	Removal and installation of components. Functional test and adjustment. Repair of components. Overhaul of components. Compliance with TDs. Deficiency reporting.

Figure 2-2-7. Maintenance Functions Applicable to Aerial Target Equipment

ORGANIZATIONAL	INTERMEDIATE	DEPOT
Receiving, inspecting, and attaching to aircraft. Perform on aircraft functional test. Corrosion prevention and cleaning and minor corrosion treatment. Service (air, nitrogen coolant, etc.). Comply with TDs. Perform periodic inspection. Deficiency reporting.	Receiving, stowing, issuing, packing, and shipping. Test, check, fault isolation, adjustment, repair, and remove and replace components in accordance with maintenance instruction manuals. Perform periodic inspections. Compliance with TDs. Wiring harness and cable repair. Remove and replace shop replaceable assemblies/weapon replaceable assemblies. Corrosion treatment: strip, treat, repaint and re-stencil. Provide ready-for-issue assets to using activities. Maintain and manage the aircraft armament equipment pool for the TYCOMs. Deficiency reporting.	Perform required rework of armament beyond the capability of the intermediate activity. Repair and calibrate precision measuring equipment. Deficiency reporting.

Figure 2-2-8. Maintenance Functions Applicable to Aircraft Armament Equipment

ORGANIZATIONAL	INTERMEDIATE	DEPOT
Perform scheduled maintenance inspections in accordance with applicable maintenance requirement cards and maintenance instruction manuals. Perform preloading checks and inspections. Load and unload ammunition (Medium Caliber). Install/remove gun in/from aircraft. Arm and dearm aircraft. Perform corrosion prevention and control. Comply with TDs. Maintain firing records. Deficiency reporting. Maintain accurate inventory and status in GITR database.	Perform scheduled round inspections in accordance with applicable maintenance instruction manuals. Comply with TDs. Test and check, fault isolation, adjust, repair, remove, and replace components in accordance with maintenance instruction manuals, handling and maintenance instructions. Load and unload ammunition from gun and linkless ammunition loading system transporters. Perform corrosion prevention and control. Issue to, or receive from using activities. Deficiency reporting. Maintain accurate inventory and status in GITR database.	Perform complete overhaul of all aircraft guns as required. Perform all necessary removal, repair, and replacement actions of major components, parts, and subassemblies. Comply with TDs. Perform nondestructive inspection component, including X-ray, magnetic, fluorescent, and dye penetrant test. Perform corrosion prevention and control. Deficiency reporting.

Figure 2-2-9. Maintenance Functions Applicable to Aircraft Guns and Associated Equipment

CHAPTER 2.3

Assignment of Ordnance Maintenance Responsibilities

Table of Contents

Paragraph	Subject	Page
2.3.1	Assignment of Maintenance Responsibility	2-3-1
2.3.2	Shore Activities	2-3-1
2.3.3	Industrial Establishments	2-3-1
2.3.4	Aviation Ships	2-3-1
2.3.5	Navy Squadrons and Air Wings	2-3-7
2.3.6	Marine Corps Aviation Squadrons	2-3-7
2.3.7	Marine Corps Shore Activities	2-3-7
2.3.8	Objectives of Standard Organization	2-3-7
2.3.9	Organization and Responsibilities of IMAs	2-3-8
2.3.10	Functions of Weapons Officer (Ashore)	2-3-10
2.3.11	Functions of Weapons Officer (Afloat)	2-3-11
2.3.12	Naval Air Training and Marine Corps Air Reserve Training Command Squadrons and Units	2-3-12
2.3.13	Target Division Responsibilities	2-3-12

List of Illustrations

Figure	Title	Page
2-3-1	Assigned Levels of Maintenance by Activity, Navy	2-3-2
2-3-2	Assigned Levels of Maintenance for Ordnance at Industrial Establishments	2-3-3
2-3-3	Assigned Levels of Maintenance, Aviation Ships	2-3-4
2-3-4	Assigned Levels of Maintenance, Fleet and Squadron Units, Navy	2-3-5
2-3-5	Assigned Levels of Maintenance, FMF Activity Aviation Designations, Marine Corps	2-3-6
2-3-6	Assigned Levels of Maintenance, Non- FMF Activity, Marine Corps	2-3-6
2-3-7	Typical (CVN) Weapons Department Operational Organization	2-3-9
2-3-8	Assigned Levels of Maintenance, Navy and Marine Training and Reserve Units	2-3-13
2-3-9	Typical Standard Organizational (Limited Intermediate) Level Target Maintenance Department	2-3-14

CHAPTER 2.3

Assignment of Ordnance Maintenance Responsibilities

2.3.1 Assignment of Maintenance Responsibility.

2.3.1.1 The CNO and the Commandant of the Marine Corps (CMC) assign ordnance maintenance responsibilities to activities of Navy and Marine forces. The COMNAVAIRSYSCOM assigns maintenance responsibilities to field activities managed by them.

2.3.1.2 Designated I-level activities perform selected ordnance maintenance functions for an entire logistics area as recommended by the applicable TYCOM and approved by COMNAVAIRSYSCOM. Also, specified O-level maintenance activities are authorized to perform limited I-level maintenance functions on those systems and equipment unique to the assigned mission of that activity.

2.3.1.3 Navy Fleet activities, except aviation training ships and non-aviation ships supporting aircraft, assigned the responsibility for performing I-level maintenance will establish an Intermediate Maintenance Activity (IMA) that consists of an AIMD, Weapons Department (Afloat/Ashore) and NMC Detachments ashore. In carrying out its maintenance responsibilities, the Weapons Department or NMC Detachment/FRCs performs on-equipment maintenance but is authorized to perform I-level maintenance to the limits of its capabilities. For maintenance beyond those limits, the other IMA members will provide required support within their capabilities.

2.3.1.4 Throughout this manual, any reference to the Weapons Department will include the weapons division on amphibious assault ships (LHD/LHA/LPD) and other commands where a weapons division serves the same functions as a Weapons Department.

2.3.2 Shore Activities. Shore activities involved in the maintenance and support of ordnance and related equipment are classified in one of three categories: (1) Navy, (2) other service, or (3) commercial. Regardless of which category an activity falls under, each one is assigned one or more of the three levels of maintenance (Organizational, Intermediate, and Depot) and the responsibility for carrying out the function inherent to that level as previously defined in Chapter 2.2. Figures 2-3-1 through 2-3-6 identify the maintenance level(s) assigned to those activities responsible for maintaining ordnance and related equipment. Stations and activities of the shore establishment are assigned responsibility for performing the level of ordnance maintenance designated in Figure 2-3-1.

2.3.3 Industrial Establishments. The industrial establishments listed in Figure 2-3-2 are responsible for performing the level of maintenance on ordnance as indicated.

2.3.4 Aviation Ships. Aviation ships are responsible for the levels of ordnance maintenance designated in Figure 2-3-3. Non-aviation ships are not responsible for ordnance maintenance; however, they shall provide required Organizational level facilities (including all installed equipment).

ACTIVITY	LEVEL		NOTE	ACTIVITY	LEVEL		NOTE
	ORGANI-ZATIONAL	INTER-MEDIATE			ORGANI-ZATIONAL	INTER-MEDIATE	
JRB Atlanta	X	X		COMNAVFORKOREA	X	X	
NMC EAD DET Yokusuka Annex Atsugi	X	X		NMC CED DET Mayport	X	X	
PMRF Barking Sands	X	X		NAS Meridian	X	X	
NAS Brunswick	X	X		NAF Mildenhall	X	X	
NMC CWD DET China Lake	X	X		NMC EAD DET Misawa	X	X	
NAS Corpus Christi	X	X		NAVSUPPACT Naples	-	-	
NMC EAD DET Diego Garcia	X	X		JRB New Orleans NAS	X	X	
JRB Ft Worth	X	X		NMC CED DET Oceana	X	X	
NMC CWD DET El Centro	X	-		NMC CWD DET North Island	X	X	
NMC CWD DET Fallon	X	X		NAS Oceana	X	X	
NAVSTA Guantanamo	X	X		NAS Pensacola	X	X	
NMC CED DETJacksonville	X	X		NAS Patuxent River	X	X	
NMC CED DET Key West	X	X		NCSC Panama City	X	X	
NAS Keflavik	X	X		NMC CWD DET Point Mugu	X	X	
NAS Kingsville	X	X		NS Roosevelt Roads	X	X	
NMC CWD DET Lemoore	X	X		NS Rota	X	X	
NMC EAD DET Pearl Harbor	X	X		NAVSUPPACT Souda Bay	X	-	
NMC EAD DET Yokosuka	X	-		NAS Sigonella	X	X	
NMC EAD DET Okinawa	X	X		NAF Washington	X	X	
				NMC CWD DET Whidbey Island	X	X	
				JRB Willow Grove	X	X	
				NAS Whiting Field	X	X	

NOTES:

1. Activities not under the management control of the Commander, Naval Air Systems Command which have limited I-level support capabilities will be supported as directed/negotiated by Type Commanders. I-level maintenance performed on equipment on subcustody to departments other than the air wing requires the support of additional personnel from the department having such equipment on subcustody.

2. A dash (-) indicates limited ordnance maintenance responsibility for that particular level.

3. An “X” assigns maintenance responsibility for that particular level.

4. Blanks indicate no responsibility for that particular level.

5. COMFLTACT Yokosuka and COMNAVKOREA are storage and issue only.

6. COMFLTACT Okinawa is ammunition storage and issue activity, with Target repair and launch capability.

Figure 2-3-1. Assigned Levels of Maintenance by Activity, Navy

ACTIVITY	LEVEL		ACTIVITY	LEVEL	
	INTER-MEDIATE	DEPOT		INTER-MEDIATE	DEPOT
NMC CED DET Yorktown		X	Contractors:		
NMC CWD DET Indian Island		X	Raytheon Missile Systems Co. (SIDEWINDER (AIM-9X only), SPARROW, HARM, and AMRAAM)		X
NMC CWD DET Seal Beach Fallbrook Annex		X			
NAWMU-1 Guam (HARM, AARGM)	X	-	ATK/Allegany Ballistics Laboratory, Rocket City, West Virginia (AARGM)		X
NAVSURFWARCENDIV Indian Head (Rocket motors, propulsion section, gas generators, and igniters)		X	Boeing Aerospace (JDAM/Laser JDAM) (HARPOON/SLAM-ER)		X
AFLC Ogden (MAVERICK AUR, Center Aft Section)		X			
Anniston Army Depot (HELLFIRE)		X			
NMC EAD DET Guam	X				
NMC EAD DET Sasebo	X				
Letterkenny Explosive Munitions Center (HARM, AARGM)	X				
Army Depot Tobyhanna (SIDEWINDER (except AIM-9X), and MAVERICK Guidance and Control Section) (SLAM-ER Seeker)		X			

Figure 2-3-2. Assigned Levels of Maintenance for Ordnance at Industrial Establishments

ACTIVITY	LEVEL		NOTE
	ORGANIZATIONAL	INTERMEDIATE	
CVN (Aircraft Carriers)	X	X	1, 2, 3, 5, 6
LHA/LHD (Amphibious Assault Ship, General Purpose	X	X	1,2, 3, 6, 9
LPD (Amphibious Transport Dock)	X	X	1, 3, 7, 9
ACS (Aviation Capable Ship less LPD)	X		3, 8, 9
MCS (Mine Countermeasures Ship)	X	X	1, 2, 3, 4, 6, 9

NOTES:

1. I-level maintenance performed on equipment on subcustody to departments other than the air wing requires additional support personnel from the department having such equipment on subcustody.

2. CVNs/LHAs/LHDs/LPDs/MCSs are assigned the following maintenance responsibilities: provide Organizational and Intermediate level maintenance facilities for use by embarked aviation units; provide and maintain required custody coded (P and E) items of support equipment for use by embarked aviation units (other than organizational property); and provide O-level support and I-level maintenance material to embarked aviation units.

3. Transportation vehicles assigned to the ship are not aeronautical in nature; consequently, they do not fall under the purview of ordnance maintenance.

4. Command and control ship for surface mine sweepers and all airborne mine countermeasures operations. Support small craft operations and provide O-level/I-level maintenance for mine warfare equipment, helicopters, and associated SE for embarked squadrons, as required by the aviation TYCOM, and adhere to direction from MINEWARCOM.

5. Weapons Department and IMA are assigned I-level support for the test, repair, calibration, and maintenance of air launched missiles and associated missile test equipment.

6. CVNs/LHAs/LHDs/MCSs. The following maintenance responsibilities are assigned in support of crash salvage equipment, flight and hangar deck cleaning and maintenance equipment: (a) Air Department is assigned custody of and responsibility for O-level maintenance; (b) IMA is responsible for I-level maintenance; (c) Technical assistance shall be provided by the electronics material officer for associated radio equipment. For TAU-2 fire fighting equipment, technical assistance will be provided by the Engineering Department.

7. LPDs provide and maintain items of support equipment, TAU-2, and AS32P-16 fire fighting equipment in support of embarked aviation units. I-level maintenance is limited to troubleshooting, replacement of minor components (starters, switches, belts, tires, wheels, etc.), and corrosion control.

8. Wings, groups, squadrons, and detachments will retain or crossdeck organizational property at the discretion of the cognizant ACC or TYCOM.

9. Surface TYCOMs are responsible for O-level maintenance and inventory management of SE per directives published by the aviation TYCOM. I-level maintenance is done by IMAs designated by the aviation TYCOM. D-level rework of SE is scheduled through the aviation TYCOM.

Figure 2-3-3. Assigned Levels of Maintenance, Aviation Ships

ACTIVITY	LEVEL		NOTE
	ORGANIZATIONAL	INTERMEDIATE	
VS (Air Antisubmarine Squadron)	X		
VX (Air Development Squadron)	X	-	1
VQ (Fleet Air Reconnaissance Squadron)	X	-	1
VAK (Aerial Refueling Squadron)	X		
VAW (Carrier Airborne Early Warning Squadron)	X		
VC (Fleet Composite Squadron)	X		1
VF (Fighter Squadron)	X		
VR (Fleet Logistics Support Squadron)	X		
VFA (Fighter Attack Squadron)	X		
HM (Helicopter Mine Countermeasures Squadron)	X		
HS (Helicopter Antisubmarine Squadron)	X		
VP (Patrol Squadron)	X		
VFC (Fleet Composite Squadron)	X	-	1
HC (Helicopter Combat Squadron)	X		
CVW (Carrier Air Wing)	X		2
VAQ (Tactical Electronic-Warfare Squadron)	X		1
HSL (Helicopter Antisubmarine Squadron, Light)	X		
HAL (Helicopter Attack Squadron, Light)	X	-	1

NOTES:

1. Authorized to perform limited I-level maintenance on equipment that is peculiar to the mission of the activity/ assigned aircraft as authorized by ACCs and the Commander, Naval Air Systems Command. Continental United States activities are directed to use the supporting IMA whenever possible. Duplication of facilities and equipment and expenditure of funds are not justifiable.

2. Wing Commanders are responsible for coordinating all O-level maintenance performed on or in support of all aircraft assigned to wing squadrons. Particular emphasis should be placed on areas where the various wing squadrons need the same maintenance facilities.

3. A dash (-) indicates limited ordnance maintenance responsibility for that particular level.

4. An “X” assigns maintenance responsibility for that particular level.

5. Blanks indicate no responsibility for that particular level.

Figure 2-3-4. Assigned Levels of Maintenance, Fleet and Squadron Units, Navy

ACTIVITY	LEVEL		NOTE
	ORGANIZATIONAL	INTERMEDIATE	
HMM - Marine Medium Helicopter Squadron	X		
HMH - Marine Heavy Helicopter Squadron	X		
HMLA - Marine Light Attack Helicopter Squadron	X		
MALS - Marine Aviation Logistics Squadron	X	X	3
VMFA - Marine Fighter Attack Squadron	X		3
VMA - Marine Attack Squadron	X		3
VMFA (AW) - Marine Fighter Attack Squadron (all weather)	X		3
VMAQ - Marine Tactical Electronic Warfare Squadron	X		3
VMGR - Marine Refueling/Transport Squadron	X		3
VMU - Unmanned Aerial Vehicle Units	X		
MALSEK - Marine Aviation Logistics Support Element, Kaneohe Bay, HI		X	

NOTES:

1. An "X" assigns maintenance responsibility for that particular level.
2. Blanks indicate no responsibility for that particular level.
3. Wing Commanders are responsible for coordinating all O-level maintenance performed on or in support of all aircraft assigned to wing squadrons. Particular emphasis should be placed on areas where the various wing squadrons need the same maintenance facilities.

Figure 2-3-5. Assigned Levels of Maintenance, FMF Activity Aviation Designations, Marine Corps

ACTIVITY	LEVEL		NOTE
	ORGANIZATIONAL	INTERMEDIATE	
MCAS Cherry Point	X	X	2
MCAF Quantico			1
MCAS Iwakuni	X	X	2
MCAS Yuma	X	X	2
MCBH Kaneohe Bay	X	X	2
MCAS New River		X	1,2
MCAS Futenma	X	X	2
MCAS Beaufort	X	X	2
MCAS Camp Pendleton	X	X	1,2
MCAS Miramar	X	X	2

NOTES:

1. Provides flightline service for transient aircraft.
2. Store and issue ordnance to tenant and deployed intermediate activities.
3. An "X" assigns maintenance responsibility for that particular level.
4. Blanks indicate no responsibility for that particular level.

Figure 2-3-6. Assigned Levels of Maintenance, Non-FMF Activity, Marine Corps

2.3.5 Navy Squadrons and Air Wings. These activities are responsible for performing ordnance maintenance designated in Figure 2-3-4.

2.3.6 Marine Corps Aviation Squadrons. These activities are responsible for performing ordnance maintenance designated in Figure 2-3-5.

2.3.7 Marine Corps Shore Activities. The Marine Corps Air Stations (MCAS) and Marine Corps air facilities shown in Figure 2-3-6 are responsible for performing the designated levels of maintenance and for providing flightline services for transient aircraft. The stations are responsible for providing maintenance facilities for tenant activities. In addition, the stations function as secondary stock points to store and issue ordnance to tenant and deployed activities.

2.3.7.1 Responsibilities and Functions of MCAS/Ordnance Department. The Weapons Department of a MCAS is responsible for the security, inventory, and accountability of ordnance and ammunition stored aboard the air station. Its functions include requisitioning, receiving, storing, and issuing ordnance and related items to tenant and deployed activities. It is not manned, organized or equipped to assemble or deliver ordnance to tenant activities. These functions are performed by MALS.

2.3.7.2 Responsibilities and Functions of the MALS Ordnance Department. The ordnance department of a MALS is responsible for providing I-level maintenance of AAE, and O & I-level maintenance of AWSE. The MALS functions closely parallel the Weapons Department, FRCs and NMC Detachment. The ordnance department of a MALS requisitions ammunition from the Ordnance/Weapons Department/NMC Detachment of an MCAS, and upon receipt, inspects, assembles and delivers the ammunition to the supported squadron aboard the air station. The MALS also deploys with squadrons providing them full support at advanced bases and expeditionary airfields.

2.3.8 Objectives of Standard Organization.

2.3.8.1 The NOMP has been designed to provide standard organizations with explicitly assigned responsibilities. Such standardization shall ensure effective management within a framework of authority, functions, and relationships necessary to achieve improvements in performance, economy of operation, and quality of work. It is recognized that such objectives are not attainable by a manual of organizational structure alone. They are more readily attainable by the intelligent and dedicated efforts of all personnel engaged in ordnance work, completely integrated by the management control processes used in an effective, standard organization. A standard organization for maintenance and support activities, properly implemented, will materially aid in the accomplishment of the following objectives:

a. Improved performance and training of ordnance personnel.

b. Improved equipment and system readiness.

c. Improved maintenance integrity and effectiveness for all material.

d. Improved safety.

e. Improved use of maintenance, manpower, and materials.

f. Improved planning and scheduling of maintenance work.

g. Improved management and evaluation of work performance.

h. Improved quality of the end product.

i. Improved attainment and retention of combat readiness.

j. Continuity when weapons, equipment, or personnel are transferred between commands.

2.3.8.2 Organizational Structure. The organizational structure discussed in this chapter incorporates the basic span of control, proper alignment of functions and division of work, uniformity of assignments, and the delegation of authority commensurate with the assignment of responsibility.

2.3.8.3 Responsibilities of Line and Staff. A line relationship is a relationship which exists between seniors and their subordinates. The relationship may be identified as a direct supervisory relationship, involving work assignment to subordinates and appraisal of performance. The staff relationship is the relationship which exists between an "advisory" staff supervisor and a "production" line supervisor. Staff elements are designed to be integral elements of the organization, wholly concerned with the exercise of servicing and supporting production elements.

2.3.8.4 Use of Terms. The term "department" used throughout this manual is a general term which applies fully to all weapons activities having a department head. In cases of maintenance activities assigned as divisions to other departments, division will be used in place of department; branch will be used in place of division; and sections in place of branches.

2.3.8.5 Organization Policy. Workcenters are designated functional areas to which ordnance personnel are assigned. Typical workcenters are ordnance production control, AAE, WSE, munitions assembly and storage, ammunition stock recording, etc. A workcenter will be established for each functional area to which ordnance personnel may be permanently assigned in an organization. The quantity and designation of workcenters will be based upon numbers of personnel, span of control, workload, schedules, and specific locations. Workcenters will be established for the lowest practicable level of supervision desired.

2.3.9 Organization and Responsibilities of IMAs.

2.3.9.1 An IMA comprises all departmental and organizational units responsible for providing I-level maintenance support ashore and afloat. Normally, an IMA consists of the AIMD/FRC, the Supply Department, the Weapons Department or NMC Detachment, the Public Works Department (Ashore), and the Engineering Department (Afloat). As an integral part of the IMA, the AIMD is responsible for performing I-level maintenance functions on the aircraft and aeronautical equipment located at the ship or station supported.

2.3.9.2 The Weapons Department or NMC Detachment shall be organized similar to the AIMD to carry out its ordnance maintenance responsibilities. Figure 2-3-7 depicts a typical CVN weapons operational organization.

2.3.9.3 AWSE maintenance responsibilities and procedures affect the AIMDs/FRCs (AWSE custodian), Weapons Departments and NMC Detachments (AWSE subcustodian), of aircraft carriers, and amphibious assault ships. It is intended that each maintenance task be performed at that level of maintenance which will ensure the best use of materials, manpower, and funding.

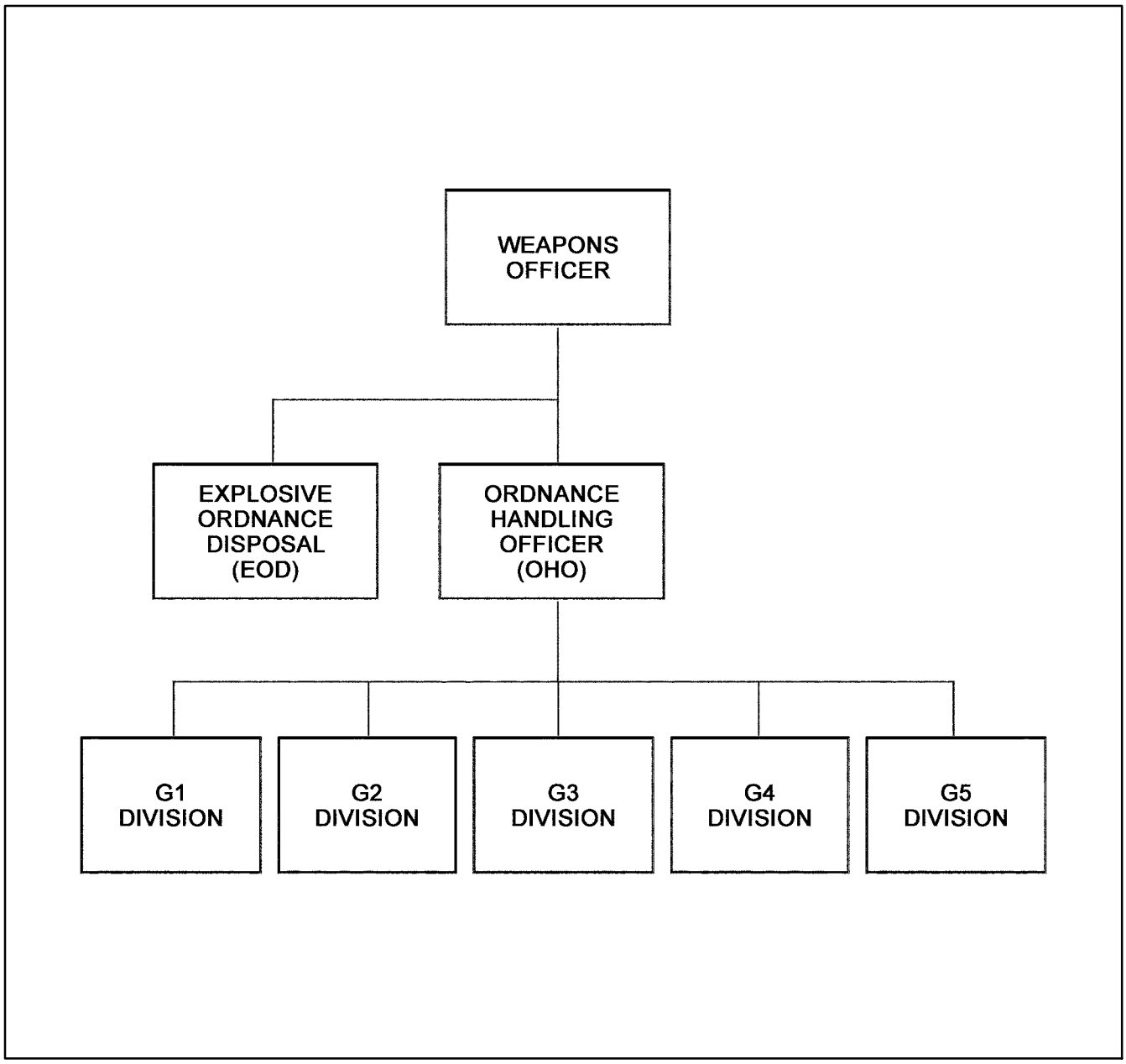

Figure 2-3-7. Typical (CVN) Weapons Department Operational Organization

Maintenance will be performed, to the extent capable, by the subcustodian. When AWSE maintenance is beyond the capability of the subcustodian, it will be accomplished by the department or activity more capable of completing the specific maintenance action. Normally, this will be the AIMD/FRC, engineering department, public works, Fleet Readiness Center, or a commercial contractor.

2.3.10 Functions of Weapons Officer (Ashore). As Head of the Weapons Department, the Weapons Officer or NMC Detachment Officer In Charge (OIC) manages the Weapons Department and is responsible to the Commanding Officer for the accomplishment of the department mission. Weapons Officer duties, responsibilities, and authority include requirements to:

a. Administer the operation of the weapons department.

b. Employ sound management practices in the handling of personnel, facilities, material, and in-work flow methods.

c. Define and delegate responsibilities; define and assign functions and operations in accordance with existing directives.

d. Organize the Weapon Department or NMC Detachment and initiate requests for and make recommendations relative to changes concerning personnel, facilities, and equipment required to accomplish assigned tasks.

e. Ensure the accomplishment of training for both permanently and temporarily assigned personnel.

f. Analyze the mission accomplishment and capabilities of the Weapons Department or NMC Detachment using reports provided by the maintenance data system on a continuing and progressive basis.

g. Ensure full and effective employment of assigned weapons personnel.

h. Ensure that the productive output of the Weapons Department or NMC Detachment is of the proper quantity and quality.

i. Maintain liaison with other department heads, representatives of higher authority, and other weapons organizations.

j. Publish and ensure internal compliance with maintenance, safety, and security procedures to ensure that optimum performance is achieved.

k. Schedule and hold periodic planning and/or information meetings for all assigned Officers and Senior Petty Officers.

l. Provide data analysis to superiors in the chain of command, where required, to show utilization of manpower, equipment, and facilities.

m. Obtain that support equipment required to carry out the mission of the Weapons Department or NMC Detachment and to maintain storage, operation, and inspection of AWSE.

n. Contribute to the product improvement program.

o. Administer and monitor the conventional ordnance qualification and certification program.

p. Supervise and direct the procurement, handling, storage, accountability, and issue of ship and aircraft ammunition.

q. Ensure captive carry flight hour information is being reported to Naval Air Warfare Center Weapon Division (NAVAIRWARCENWPNDIV) China Lake, CA. Monitor compliance with Automated Captive Carry Entry System (ACES) data collection and reporting process. Captive carry reporting instructions are contained in Volume I, Chapter 3.2.

r. Ensure accurate data inputs are maintained in the Gun Inventory Tracking Reports (GITR) database. Reporting instructions are contained in Volume II, Chapter 3.

2.3.11 Functions of Weapons Officer (Afloat). Afloat Weapons Departments shall accomplish those management, staff, and production functions applicable to shore activities even though the organizational structure is somewhat changed. The Weapons Officer is responsible to the Commanding Officer for the supervision and direction of the employment and maintenance of AWSE for the ship, and the procurement, handling, storage, and issue of all ammunition. Weapons Officer duties, responsibilities, and authority include requirements to:

a. Supervise and direct the operation, care, and maintenance of the ship's armament and magazine spaces.

b. Supervise and direct the procurement, handling, storage, accountability, and issue of ship and aircraft ammunition.

c. Conduct periodic inspections of magazines and sprinkler systems using NAVSEA S9522-AA-HBK-010 instruction.

d. Maintain the physical security and integrity of magazines and ready storage spaces, including the control of assigned keys.

e. Provide storage for all ammunition. Where applicable, supervise maintenance, test, and assembly of munition components and related equipment.

f. Ensure the training of all personnel assigned to the weapons department in the handling, storage, characteristics, and safety precautions for all ammunition embarked.

g. Provide required space for explosive ordnance disposal equipment and publications and supervise the explosive ordnance disposal team when embarked.

h. Administer and monitor the conventional ordnance qualification and certification program.

i. Perform other such duties as may be assigned.

j. Review outstanding ship alterations and submit recommendations on those concerning the Weapons Department.

k. Ensure captive carry flight hour information is being reported to NAVAIRWARCENWPNDIV China Lake, CA. Monitor and compliance with ACES data collection and reporting process. Captive carry reporting procedures are contained in Volume I, Chapter 3.2.

l. Ensure accurate data inputs are maintained in the GITR database. Reporting instructions are contained in Volume II, Chapter 3.

2.3.12 Naval Air Training and Marine Corps Air Reserve Training Command Squadrons and Units. These activities are responsible for performing the levels of ordnance maintenance designated in Figure 2-3-8.

2.3.13 Target Division Responsibilities.

2.3.13.1 Functions. The target division (aerial or surface), when established, is responsible for the following functions:

a. Supervising, coordinating, and completing periodic maintenance, inspections, decontaminations, and rehabilitation of assigned targets. Crew leaders and such other personnel as designated by the maintenance officer will be permanently assigned. Additional personnel will be made available as required from other divisions.

b. As directed by the Maintenance Officer and in conjunction with other production divisions, performing applicable Organizational and selected Intermediate level maintenance functions in those areas outlined in Volume II, Section 5.

c. Advise maintenance control continuously of the status of work in progress.

d. Ensure cleanliness of hangar and assigned spaces.

e. Nominate qualified personnel for designation as Collateral Duty Inspector (CDI).

f. Initiate requests for material required for doing assigned tasks.

g. Assume custody of tools and support equipment assigned to the division.

h. Interpret applicable directives and preparing maintenance instructions, in draft form, to implement such directives.

i. Recommend changes in techniques to promote ground safety, flight safety, and material readiness of assigned targets.

j. Carry out an active foreign object damage prevention program.

k. Initiate requests to maintenance control for unscheduled maintenance.

l. Provide target loading and launching crew members and supervisors.

m. Expedite the accomplishment of assigned work.

n. Maintain support equipment in accordance with programs and procedures in Volume II.

o. Carry out an effective corrosion prevention and control program.

2.3.13.2 Organization and Responsibilities.

2.3.13.2.1 Figure 2-3-9 shows the standard target maintenance department organization for Naval activities assigned the operation and maintenance of targets. All such activities are assigned O-level and limited I-level maintenance responsibilities. Squadrons assigned both targets and aircraft are authorized to combine I-level maintenance functions in circumstances where it is practical and economically advantageous.

ACTIVITY	LEVEL		NOTE
	ORGANIZATIONAL	INTERMEDIATE	
VT/VMAT/VMFAT (Training Squadron)	X	-	
HT/HMT (Helicopter Training Squadron)	X	-	
CNATTU (Center for Naval Aviation Technical Training Unit)	X	-	1
NATTC (Naval Air Technical Training Center) Pensacola	X	-	2
NAR (Naval Air Reserve)	X	-	3
MAG (Marine Air Group) VMA/VMF, etc.	X	-	3

NOTES:

1. The Maintenance Training Units of CNATTUs perform O-level maintenance on assigned aircraft and related support equipment used for training in support of technical schools. Local HOST FRC perform I-level maintenance on CNATTU aircraft and related support equipment. Equipment found beyond the capability of the HOST FRC will be returned to that CNATTU for processing.

2. The Equipment Maintenance Unit of NATTC Pensacola perform Organizational and limited Intermediate level maintenance on support equipment used in support of technical training. I-level maintenance beyond the capability of NATTC Pensacola is arranged with the closest capable facility.

3. Navy/Marine air reserve aviation squadrons perform O-level maintenance on assigned aircraft during active duty for training periods or cruises, and when activated and assigned to Fleet control. During regular monthly drill periods, these squadrons perform maintenance which varies with training requirements and schedules published by the TYCOM and the parent activities.

4. A dash (-) indicates limited ordnance maintenance responsibility for that particular level.

5. An “X” assigns maintenance responsibility for that particular level.

6. Blanks indicate no responsibility for that particular level.

Figure 2-3-8. Assigned Levels of Maintenance, Navy and Marine Training and Reserve Units

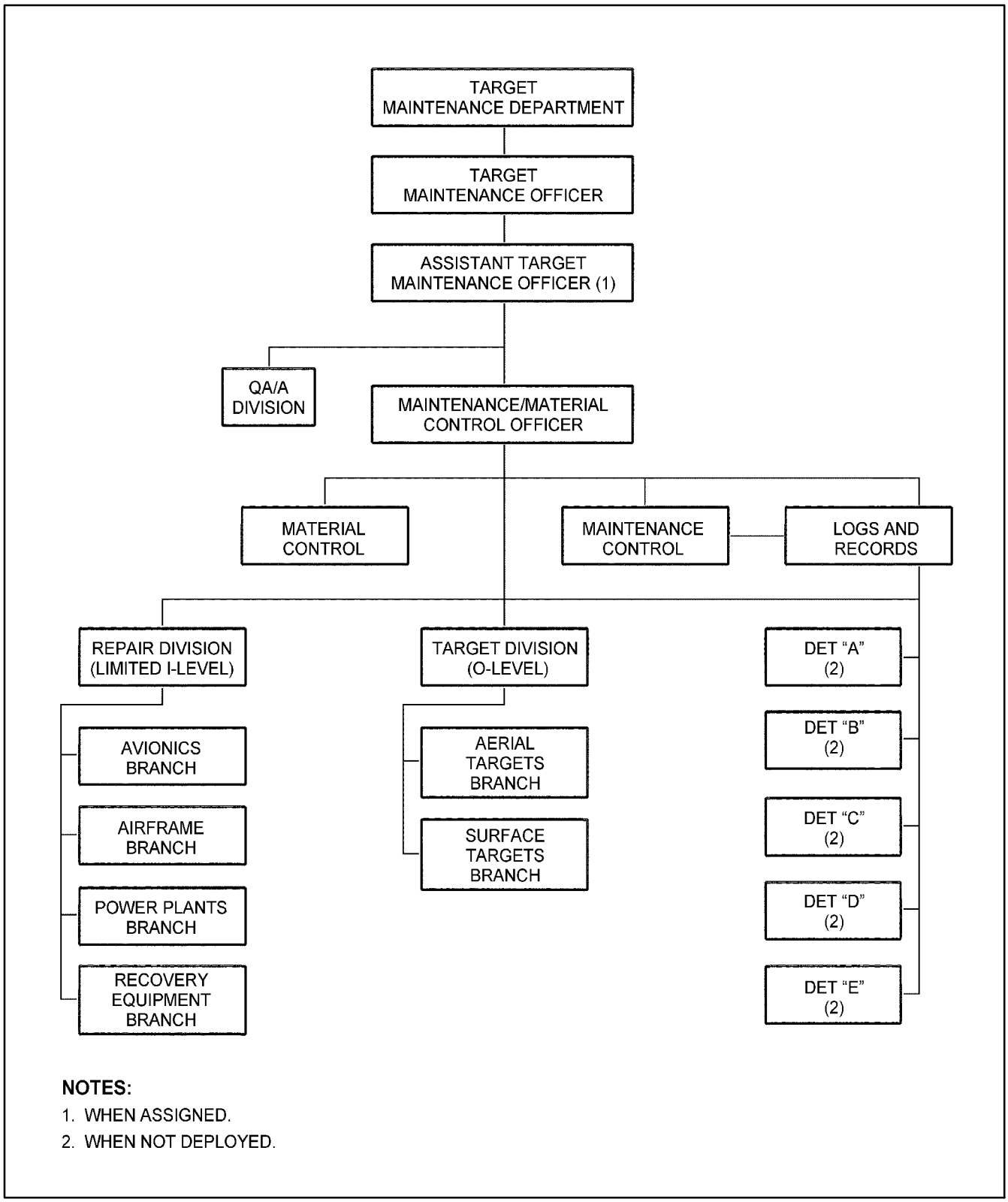

Figure 2-3-9. Typical Standard Organizational (Limited Intermediate) Level Target Maintenance Department

2.3.13.2.2 Management Responsibilities. The management responsibilities of the target maintenance officer, assistant target maintenance officer, division officers, branch officers, and work-center supervisors are essentially identical to those of their aircraft maintenance counterparts as prescribed by COMNAVAIRFORINST 4790.2 series.

2.3.13.2.3 Staff Functions. The responsibilities of Quality Assurance (QA) are as described in the following paragraphs, and closely parallel those duties outlined in the COMNAVAIRFORINST 4790.2 series for QA Department in an aircraft maintenance activity.

2.3.13.2.4 The permanently assigned QA Officer is responsible for conducting and managing the target division QA effort. While it is recognized all the functions of QA as described in this chapter may not be appropriate in some target activities, the basic precepts of ensuring quality workmanship prevail. QA provides a systematic and efficient method for gathering, analyzing, and maintaining information on the quality characteristics of products, the source and nature of defects, and their immediate impact on the current operation. It permits decisions to be based on facts rather than intuition or memory and provides comparative data which is useful long after the details of the particular time or events have passed. The objective of QA is to readily pinpoint problem areas in which management can:

a. Improve the quality, uniformity, and reliability of the total maintenance effort.

b. Improve the work environment, tools, and equipment used in the maintenance effort.

c. Eliminate unnecessary man-hour and dollar expenditures.

d. Improve training, work habits, and procedures of maintenance personnel.

e. Increase the excellence and value of reports and correspondence originated by maintenance personnel.

f. Effectively disseminate technical information.

g. Establish realistic material and equipment requirements in support of the maintenance effort.

h. Support the Naval Aviation Maintenance Discrepancy Reporting Program (NAMDRP) using the JDRS website: www.jdrs.mil.

i. Support the Foreign Object Damage (FOD) Prevention and Reporting Program.

2.3.13.2.5 QA is a staff function which requires both authority and assumption of responsibility. Direct liaison between QA and production personnel is necessary and must be energetically exercised. Although the QA officer is responsible to the target division maintenance officer for the overall quality of maintenance within the division, work center supervisors are duly responsible for ensuring required inspections are conducted and high quality workmanship is attained. Specific quality assurance responsibilities are to:

a. Maintain the Central Technical Publications Library (CTPL) for the division, including TDs, control classified technical publications for the division, and ensure each dispersed technical publication library receives all publications applicable to each work center and these are kept current and complete.

b. Review all Engineering Investigation Requests (EIRs), Product Quality Deficiency Reports (PQDRs), Hazardous Material Reports (HMRs), Explosive Mishap Reports (EMRs), Explosive Event Reports (EERs) and Conventional Ordnance Deficiency Reports (CODRs) to ensure they are accurate, clear and concise prior to submission.

c. Monitor inspections of Precision Measuring Equipment (PME) to ensure compliance with calibration intervals and safety instructions.

d. Perform inspections of all maintenance equipment and facilities to ensure compliance with fire and safety regulations. Check for the existence of satisfactory environmental conditions within the work spaces and assure equipment is maintained in a safe operating condition. Check for equipment operator qualifications and ensure proper training for licensing is maintained.

e. Provide a continuous training program in techniques and procedures pertaining to the conduct of inspections. When directed or required, provide technical support to study trouble areas and submit recommendations for corrective action.

f. Use information from Maintenance Data Reports (MDRs) in developing discrepancy trends to identify failure areas or other maintenance problems.

g. Review source documents and periodic inspection records, and note recurring discrepancies requiring special action.

h. Obtain and use inspection equipment, such as lights, borescopes, mirrors, magnifying glasses, tension-meters, pressure gauges, and carbon monoxide testers. Ensure production personnel have such equipment available, in operating condition, calibrated if applicable, and in use.

i. Ensure established standard procedures are observed for conducting scheduled and unscheduled inspections, ground tests, and bench check of components, including engines. Periodically accompany check crews during inspections to ensure the desired quality level is obtained.

j. Ensure the configuration of targets and components is correct and all essential modifications have been incorporated. This requires reviewing appropriate logbooks and records.

k. Ensure the configuration of target Support Equipment (SE) is correct and all essential modifications have been incorporated.

l. Ensure an inspection is conducted on all equipment received for use, returned for repair, or held awaiting repair to verify satisfactory material condition, identification, packaging, preservation, and configuration; and when applicable, shelf-life limits are not exceeded.

m. Review all incoming technical publications and directives to determine their application to the targets division.

n. Prepare or assist in the preparation of Maintenance Instructions (MIs) to ensure QA requirements are specified.

o. Comply with other assigned responsibilities, and perform mandatory QA inspections as specified in Maintenance Instruction Manuals (MIMs), TDs, MIs, and those inspections required to be conducted by QA personnel during and upon completion of a maintenance action.

2.3.13.2.6 Target Department Safety. QA is assigned overall responsibility for target division safety. The intent is not to conflict with any portion of the activity's overall safety program but to assist in coordination of the total safety effort. These responsibilities are to:

a. Disseminate safety posters and literature.

b. Report all hazards, mishaps, and unsafe practices in the department.

c. Conduct safety meetings within the department, at least monthly.

d. Coordinate with the host activity safety officer.

e. Participate in the activity's safety surveys and stand downs.

2.3.13.2.7 The NAMDRP establishes policy, responsibilities, and requirements for reporting discrepancies in material and technical publications, substandard workmanship, and improper QA procedures. All NAMDRP reports shall be submitted via the JDRS website: www.jdrs.mil. The Quality Assurance Officer (QAO) is responsible for managing the NAMDRP program. QA is responsible for reviewing all NAMDRP reports to ensure they are accurate, clear, concise, and complete. Explosive Mishaps are reported as EMRs and Conventional Ordnance Discrepancies are reported as CODRs. Correspondence, reports, or requests involving the management of the NAMDRP program shall be reviewed by the QA Officer using the JDRS website.

2.3.13.2.8 FOD Prevention Program. QA will ensure:

a. All work centers have a FOD Prevention Program as described in the COMNAVAIRFORINST 4790.2 series.

b. All instructions pertaining to FOD prevention issued by the FOD Prevention Officer are complied with.

c. All work centers have initiated FOD prevention procedures which comply with applicable instructions and the FOD prevention and safety relationship is adequately addressed. Evaluation of FOD prevention measures shall be included in all audits.

d. Maintenance methods and procedures support the FOD prevention program.

e. The FOD Prevention Officer is aware of FOD related problems.

f. Contractor and field maintenance teams are briefed regarding the command's FOD prevention program requirements and disparities are reported to the FOD Prevention Officer.

2.3.13.2.9 Production Functions. Responsibilities for the maintenance or material control officer to support the bi-level maintenance capability are as described in the following paragraphs, and closely parallel those duties as outlined in the COMNAVAIRFORINST 4790.2 series.

2.3.13.2.10 The target division Maintenance Officer is responsible for the accomplishment of the division's mission. The Maintenance Officer shall:

a. Administer the operation of the target division per existing directives.

b. Define and assign responsibilities, functions, and operations per existing directives.

c. Organize the division and initiate requests for, and make recommendations relative to, changes concerning personnel, facilities, and equipment required to accomplish assigned tasks.

d. Ensure the accomplishment of training for permanently and temporarily assigned personnel.

e. Analyze the mission accomplishment and capabilities of the division and ensure timely planning is conducted and a statement of requirements to meet future needs is initiated, using reports provided by the MDS, on a continuous and progressive basis.

f. Ensure full and effective employment of assigned personnel.

g. Ensure the production output of the division is of proper quantity and quality per applicable specifications and directives.

h. Maintain liaison with other division officers, representatives of higher authority, and other maintenance organizations.

i. Publish and ensure internal compliance with maintenance, safety, and security procedures to ensure optimum performance is achieved.

j. Schedule and hold periodic planning and information meetings.

k. Ensure the monitoring of all maintenance programs, for example, fuel, hydraulic, and oil contamination, FOD, corrosion control and Non-Destructive Inspection (NDI).

l. Ensure the IMRL is frequently reviewed and necessary changes are submitted, accurate equipage records are maintained, and required reports are submitted.

m. Ensure applicable publications and directives are disseminated throughout the division.

2.3.13.2.11 The Maintenance Officer, in addition to the above functions will:

a. Designate a target division FOD Prevention Officer.

b. Designate, in writing, Quality Assurance Representatives (QARs), Collateral Duty Quality Assurance Representatives (CDQARs) and CDIs.

c. Approve MIs.

d. Review completed work center audits.

e. Direct all logbook/record entries and sign or designate another person to sign.

f. Establish delivery/pickup points for material as mutually agreed upon by the supply department.

2.3.13.2.12 The Maintenance Material Control Officer (MMCO) shall:

a. Coordinate and monitor the division workload.

b. Maintain liaison with supporting activities and the supply department, to ensure requirements and workload are known and satisfied.

c. Control daily workload and assign work priorities to ensure efficient movement of components through the division. Where physically possible, maintenance/production control will have intercom capability, independent of telephones.

d. Prepare required MIs to ensure adequate communication and control.

e. Review MIs, Planned Maintenance System (PMS) publications, and local maintenance requirements cards and ensure compliance.

f. Ensure the full capability of the division is used in supporting the division workload.

g. Maintain TD control procedures for the division. Initiate TD compliance's, ensure required material is ordered, and schedule timely incorporation of TDs.

SECTION 3

Weapons Performance Evaluation and Reporting Program

Table of Contents

Chapter	Subject	Page
3.1	Introduction	3-1-1
3.2	Weapons Performance Evaluation and Reporting Program	3-2-1
3.3	Weapons Assist Team Program	3-3-1
3.4	Conventional Ordnance Performance Evaluation	3-4-1
3.5	Aviation Ordnance Readiness Review	3-5-1

CHAPTER 3.1

Introduction

Table of Contents

Paragraph	Subject	Page
3.1.1	General	3-1-1
3.1.2	Scope	3-1-1
3.1.3	Weapons Performance Evaluation and Reporting Program	3-1-1
3.1.4	Conventional Ordnance Performance Evaluation Program	3-1-1
3.1.5	Joint Direct Attack Munition Surveillance Performance	3-1-1

CHAPTER 3.1

Introduction

3.1.1 General. This section discusses the weapons performance evaluation and reporting program and covers the Weapons Assist Team (WAT) program.

3.1.2 Scope. This section covers the criteria for the performance evaluation and reporting program and the role of the WAT.

3.1.3 Weapons Performance Evaluation and Reporting Program.

3.1.3.1 The weapon systems performance program provides firing histories, success rates, incident rates, kill probabilities, and mean time between failure rates. The two reports used to develop this data are the captive carry report, and the weapon system firing report. Guidelines for filling out these reports are provided in Chapter 3.2.

3.1.3.2 Primary WAT objectives are to identify reasons for poor performance of missiles or weapon systems, and secondary objectives are to assist squadrons in weapons exercises, recommend problem solutions, effect data analysis, and increase training. WATs support all weapon firing exercises. Detailed WAT functions and composition are provided in Chapter 3.3.

3.1.4 Conventional Ordnance Performance Evaluation Program.

3.1.4.1 The primary Conventional Ordnance Performance Evaluation (COPE) objectives are to provide an accurate measure of conventional ordnance performance during live ordnance evolutions and identify hardware deficiencies which degrade the performance of the hardware and weapons systems. Secondary objectives include assisting squadrons during these ordnance evolutions, providing recognition of problems which might otherwise not be subject to reporting requirements, gathering data to provide a historical base for assessment of weapons system performance, and analyzing the data to identify systematic problems within the weapon systems. Detailed COPE functions and structure are provided in Chapter 3.4.

3.1.5 Joint Direct Attack Munition Surveillance Performance. Joint Direct Attack Munition (JDAM) is a joint program where performance is verified by surveillance. This will be accomplished in two parts. Part one (three sections):

a. Weapon expenditure will be accomplished by both the Navy and the Air Force. The Air Force has a program called “Weapon System Evaluation Program” (WSEP). The Air Force intends to expend 50 units each year. These units will be instrumented with special telemetry packages contained in the tail assemblies.

b. A total of 50 units designated as Navy Non-Combat Expenditure Allocation (NCEA). Break out of this NCEA is to-be-determined.

c. 400 units will be designated as training.

3.1.5.1 Part two of this program will be an Air Force initiative where they will build for ready storage 800 units yearly. These units are BIT-tested prior to build-up and then tested once yearly for 5 years.

CHAPTER 3.2

Weapons Performance Evaluation and Reporting Program

Table of Contents

Paragraph	Subject	Page
3.2.1	General	3-2-1
3.2.2	Purpose	3-2-1
3.2.3	Weapons Performance Evaluation and Reporting Program Elements	3-2-1
3.2.4	Responsibilities	3-2-6
3.2.5	Lightweight Torpedo Firing Reporting	3-2-7

List of Illustrations

Figure	Title	Page
3-2-1	Airborne Weapons Captive Carry Log	3-2-2
3-2-2	LAN Based Automated Captive Carry Entry System Data Flow Process	3-2-5

CHAPTER 3.2

Weapons Performance Evaluation and Reporting Program

3.2.1 General. This chapter addresses the Weapons Performance Evaluation and Reporting Program and explains how it is used to document and analyze data to measure weapon performance. Uniform procedural instructions are included for utilization of WAT during scheduled weapon exercises.

3.2.2 Purpose. The purpose of this chapter is to establish a program to evaluate and improve airborne weapon and aircraft weapon system effectiveness.

3.2.3 Weapons Performance Evaluation and Reporting Program Elements.

3.2.3.1 Weapon system performance data is collected and compiled for specified airborne weapon captive carry events and firing attempts conducted by Navy and Marine Corps squadrons. Data is collected for both weapons and the supporting aircraft subsystems.

3.2.3.2 A captive carry event occurs whenever a weapon is loaded on an aircraft station and the aircraft becomes airborne. Weapon system performance during captive carry events shall be recorded using the Airborne Weapons Captive Carry Log (Figure 3-2-1). This form can be copied whenever the Automated Captive Carry Entry System (ACES) cannot be used to collect captive flight data. This reporting requirement applies to all configurations of the following weapon systems having an active guidance/control group or section (e.g., AIM, AGM, ATM, NATM, and CATM):

<u>Air-to-Air</u>

AMRAAM	(AIM-120 versions)
SIDEWINDER	(AIM-9M only)
SPARROW	(AIM-7M/P versions only)

<u>Air-to-Surface</u>

HARPOON	(AGM-84 versions only)
HARM	(AGM-88B, AGM-88C versions)
AARGM	(AGM-88E)
MAVERICK	(AGM-65E, AGM-65F versions)
SLAM-ER	(AGM-84H/K versions)
LGB/GBU/JDAM/Laser JDAM	(All Variants)
JSOW	(AGM-154 versions)

NOTE

JSOW has a Cats/Traps Limitation as follows: AGM-154A, AGM-154C, and AGM-154C-1 (all NALCs) 50 Cats/Traps. All JSOW weapons will be placed in condition Code “C” when 40 Cats/Traps have been logged. Flight limitations are as follows: AGM-154A, AGM-154C, and AGM-154C-1 (all NALCs) 300 hours.

AIRBORNE WEAPONS CAPTIVE CARRY LOG

SHIP or STATION:	SQUADRON:	WEAPON TYPE: (NOTE 2)	WPN SER NO:	NALC:

	(NOTE 1) FLIGHT DATE	EVENT	AIRCRAFT BUNO.	ACFT TYPE	STA	(NOTE 1) UPLOAD DATE	FLIGHT HOURS	CAT / TRAP	(NOTE 3) WPN CHECK S OR U	(NOTE 1) DOWN-LOAD DATE	(NOTE 4) E T I READING	(NOTE 5) DOWN-LOAD CODE
1												
2												
3												
4												
5												
6												
7												
8												
9												
10												
11												
12												
13												
14												
15												
16												

REMARKS (REMARKS CONTINUED REVERSE SIDE)

OPNAV 8000/5 (4-99)

NOTES:

1. All Dates are to be JULIAN.
2. Enter weapon type as AGM-88B, AGM-88C, ATM-88, NATM-9M, CATM-9M-8, etc.
3. If "WPN CHECK" is UNSAT, remarks amplifying problem are mandatory.
4. Elapsed Time Indicator readings are required at each download for HARM missiles or any missile with an ETI.
5. When reporting captive carry time on LGB/GBU, report captive carry time on CCG only.
6. Download Codes:

   MSF - Weapon Malfunction
   WSF - WCS Malfunction
   MMC - Mission Complete
   EOF - End of Flight OPS S - Satisfactory
   ACM - Aircraft Maintenance U - Unsatisfactory
   NDL - Not Downloaded

7. Cognizant Weapons Department/NMC or MALS (Copy to be recorded in the Missile Log book).
8. The Airborne Weapons Captive Carry Log may be reproduced locally on a 5x8 card.

Figure 3-2-1. Airborne Weapons Captive Carry Log

NOTE

When reporting captive carry time on LGB/GBU report the captive carry time of the CCG only. A record will have to be maintained and copy kept in the container with the CCG.

NOTE

Weapons system performance for AIM-9X is captured in CMBRE Log and MEDF files during CMBRE test.

3.2.3.3 Airborne weapons captive carry reporting. The Squadron Ordnance Officer is responsible to maintain the Airborne Weapons Captive Carry Log (Paragraph 3.2.3.2/Figure 3-2-1). A copy will be retained in the missile logbook. The Squadron Ordnance Officer is responsible for entering captive carry data using the AWIS ACES at https://awis.navair.navy.mil.

3.2.3.3.1 All Carrier Air Wing/Marine Corps Aviation Logistics Squadron Officers will review all of the squadrons under their cognizance for proper data entries on a quarterly basis. Captive carry can be easily tracked by utilizing the captive carry summary reports located at https://awis.navair.navy.mil.

a. Web based ACES. All shore based aviation squadrons, shall collect and submit airborne weapons captive carry flight data directly into the Airborne Captive Carry Entry System (ACES) via the web based application.

b. ACES is designed to track or maintain historical captive carry flight data. Historical captive carry flight data can be obtained directly from AWARS.

c. ACES data flow process (see Figure 3-2-2) is detailed within the users manual.

NOTE

Weapons system performance during captive carry events can be reported using the Airborne Captive Carry Log (Volume I, Figure 3-2-2) whenever ACES can not be used to collect captive flight data.

3.2.3.4 Firing Reporting System (FRS).

a. A weapon firing attempt begins when a specified weapon is loaded on an aircraft and the aircraft becomes airborne with intent to launch. Firing reports are required to be submitted within forty eight (48) hours for all non-combat firing attempts including weapon system verification exercises, follow-on test, evaluations and training firings. For combat missions, firing reports are required to be submitted within seven (7) days. Unclassified firing reports are submitted via the Firing Reporting System (FRS) module located at https://awis.navair.navy.mil. Classified or unclassified firing reports can be submitted at https://awis.nmci.navy.smil.mil. Refer to Chapter 5.9 for more information on the FRS and reporting criteria.

b. Firing reports are required for the following tactical, telemetry, and training weapons:

(1) JDAM/LJDAM

(2) LGB/DMLGB

(3) JSOW-A/C

(4) AGM-88B/C HARM

(5) AIR HARPOON

(6) SLAM-ER

(7) AIM-9M/X SIDEWINDER

(8) AIM-7 SPARROW

(9) AIM-120 AMRAAM

(10) TOW

(11) IR/LASER MAVERICK

(12) HELLFIRE

(13) RAM

c. For units without web access, the firing reports may be submitted via classified or unclassified email using downloadable templates for each weapon system. Refer to paragraph 5.9.2.4 of Volume I for details.

d. Copies of the heads up display video and any other pertinent data influencing evaluation of the firing attempt should be provided to the Commander, Naval Air Warfare Center Weapons Division, Attn: Code 684200D (AWIS), 1 Administration Circle, Bldg 2466, Mailstop 6202, China Lake, Ca 93555.

NOTE

All firing activities will report weapons firings or attempts to fire. Submitting a CODR, EMR, or EER does not relieve the reporting command from the requirement for submitting a firing report.

3.2.3.5 Telemetry and other weapon system evaluation equipment will be utilized whenever possible on specified weapons during weapon firing exercises. However, this criterion does not preclude the firing of tactical (warhead) rounds which also provide information on weapon performance. Programs have been implemented to develop telemetry equipment capable of assessing Fleet weapon expenditures in all operational environments. Telemetry systems and associated equipment should be suitable to distinguish between weapons and airborne weapon control system problems.

3.2.3.6 Deficincies detected and reported during Navy and Marine Corps firing exercises and combat missions are submitted and tracked through CODRs.

3.2.3.7 Provisions have been made to assemble, coordinate, and store weapon system performance and failure data. Compilation of this data begins with the selection of weapons to be uploaded onto an aircraft for a weapon exercise or combat mission and continues through weapon expenditure and target damage assessment or mission abort.

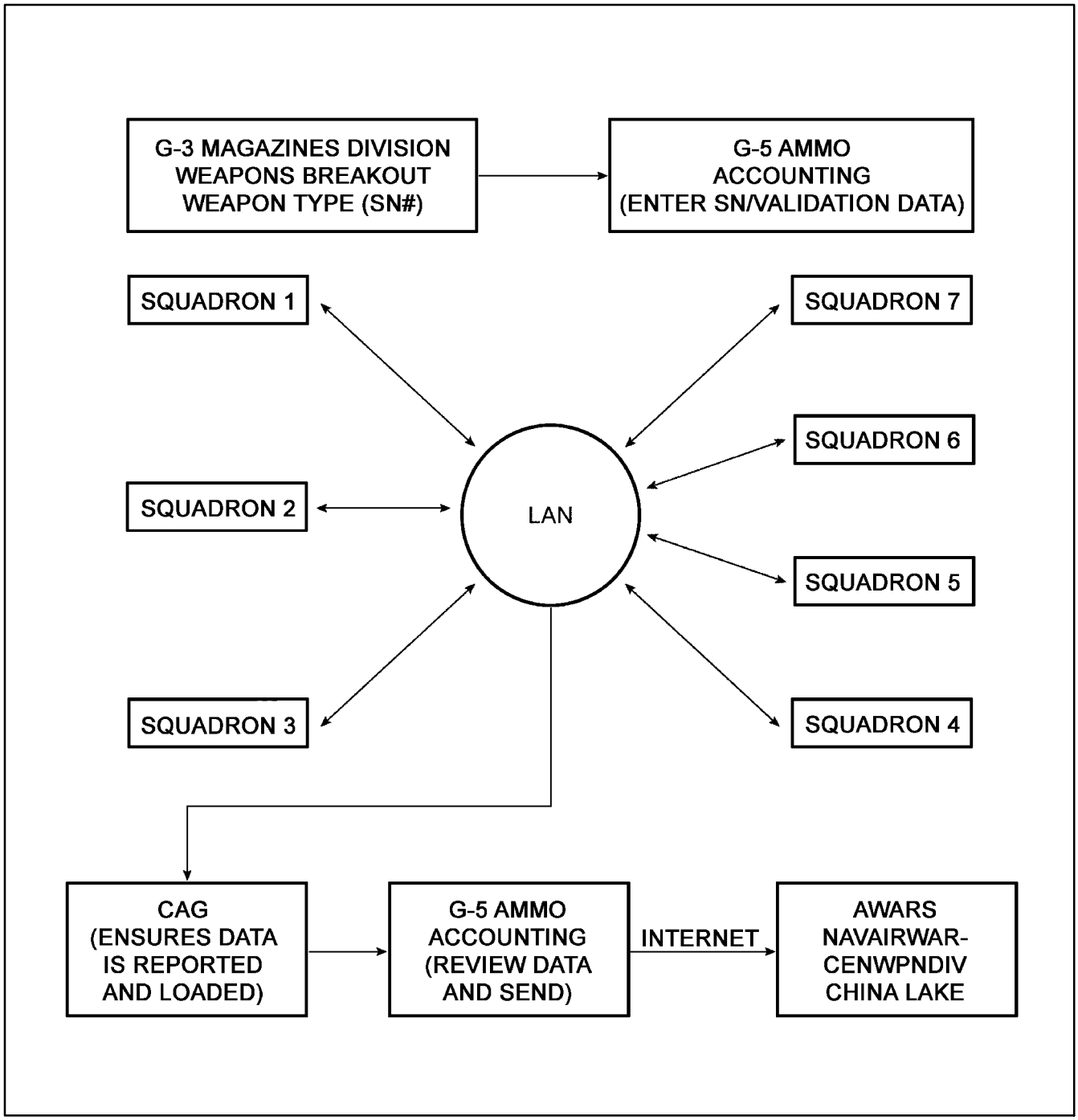

Figure 3-2-2. LAN Based Automated Captive Carry Entry System Data Flow Process

3.2.3.8 Summarized analyses of weapon system evaluation data are reported to Fleet commands, type commands, program managers, development and in-service engineering activities, and other activities. In addition to providing historical data, these analyses establish weapon system performance trends and highlight key failure categories. Such reports shall be distributed so that cognizant commands may resolve problems for each weapons system at the earliest possible stage of the logistics cycle.

3.2.4 Responsibilities.

3.2.4.1 Naval Air Systems Command. In support of the performance evaluation and reporting program, the Naval Air Systems Command performs the following:

a. Manages the weapons performance evaluation and reporting program. Identifies telemetry requirements to provide performance analysis data to be gathered in Fleet weapon verification exercises.

b. Coordinates failure analysis reporting generated by this program, including action assignments, to ensure proper execution of maintenance engineering related efforts as well as identification of design deficiencies.

c. Establishes evaluation and scoring criteria, including the definition of terms to be used in evaluating the performance of weapons.

d. Develops design changes to correct weapon performance deficiencies based on performance data evaluation.

3.2.4.2 Type Commanders. Perform the following:

a. Assure participation by Navy and Marine Corps squadrons in the Airborne Weapons Performance Evaluation and Reporting Program.

b. Provide recommendations to the Naval Air Systems Command to ensure that changing Fleet requirements are properly reflected in this program.

3.2.4.3 Naval Air Warfare Center Weapons Division. Performs the following:

a. Provides an operational analysis of each Navy and Marine Corps firing exercise observed by a WAT to assess weapon system performance.

b. As deficiencies are identified, provides recommendations for remedial action to correct deficiencies.

c. Collects, stores and analyzes captive carry data reported by operational users.

d. Provides reports and recommendations to headquarters and Fleet commands on captive carry events.

e. Collects, stores, and analyzes weapon firing data from Fleet training exercises or weapon expenditures.

f. Provides reports and recommendations to headquarters and Fleet commands on firing evaluations.

g. Manages and maintains approved weapons system automated information web based services for the target and missile community. Serves as a weapon clearing house and repository for the collection of captive carry flight and associated logistics data.

3.2.4.4 The Aviation Squadron, Aircraft Intermediate Maintenance Department (AIMD)/Fleet Readiness Center (FRC), Marine Aviation Logistics Squadron (MALS), Marine Corps Air Station (MCAS) and NMCs shall submit CODR, EMR, EER, and PQDR (Cat I and II) as required to support the performance evaluation and reporting programs.

3.2.4.5 The weapon expenditure/attempt to fire will be reported by the firing activity within forty eight (48) hours. The Squadron Ordnance and Operations Officers are responsible for the completion and submission of all data elements within the firing report.

3.2.5 Lightweight Torpedo Firing Reporting.

3.2.5.1 PEOSUBINST 8515.2 authorizes the use of technical manuals SW515-AP-PMN-010 and SW515-AP-PMN-020 for reporting and scoring of Fleet fired lightweight torpedoes. Technical manual SW515-AP-PMN-010 contains detailed instructions for use by ships, submarines, rotary wing aircraft, and fixed wing aircraft when reporting information following a lightweight torpedo firing. Technical manual SW515-AP-PMN-020 contains scoring procedures to be used by the underwater tracking range facility where the torpedo firing was conducted. Torpedo firing information collected from each Fleet firing is analyzed and stored in a database known as the "Lightweight Torpedo Reliability Information System" (LTRIS) located at the Naval Undersea Warfare Center, Keyport, Washington. Data collected from the Fleet firing is invaluable for assessment of weapon system performance and reliability.

CHAPTER 3.3

Weapons Assist Team Program

Table of Contents

Paragraph	Subject	Page
3.3.1	Weapons Assist Team Program Elements	3-3-1
3.3.2	WAT Structure	3-3-2
3.3.3	WAT Operation	3-3-2
3.3.4	Responsibilities	3-3-2
3.3.5	Performance Evaluation and Analysis	3-3-4

CHAPTER 3.3

Weapons Assist Team Program

3.3.1 Weapons Assist Team Program Elements.

3.3.1.1 The Weapons Assist Team (WAT) will support the weapons performance evaluation and reporting program by assisting Navy and Marine Corps squadrons during scheduled weapon firing exercises at the request of the Type Commanders (TYCOMs).

3.3.1.2 WAT will provide specific assistance in the planning, preparation, and analysis of air launched guided weapon firing exercises. The intent is to maximize training benefits from weapon expenditures for maintenance and aircrew personnel and to ensure accurate assessment of the material readiness of the weapon systems.

3.3.1.3 WAT will assist in the evaluation of missile and launcher performance, identify potential operational problems in the weapon system, and provide squadron Commanding Officers (COs), Ordnance Officers and Carrier Air Group (CAG)/Marine Aircraft Group (MAG) Ordnance Officers with a valid assessment of firing/drop results.

3.3.1.4 WAT assistance is provided solely in the interest of improving tactical weapon system effectiveness and shall not be considered an inspection.

3.3.1.5 A review of weapon firing summaries over past years shows a high percentage of unsuccessful firings attributed to weapon failure. The results of this review do not correlate with weapon design reliability or stockpile test sampling. WAT will be concerned with the total weapon system, including platform fire control, aircrew, maintenance personnel, and weapon.

3.3.1.6 WAT will attempt to identify the causative factors in each case of poor weapon system performance through analysis of available firing data, including telemetry analysis and observation of preoperational and post operational system checks.

3.3.1.7 WAT will function in such a way as to provide maximum benefit to the squadron, to assist in weapon system checks, to advise of recommended changes in procedures, and to provide factual reports of total weapon system performance upon completion of the exercise.

3.3.1.8 The WAT is composed of weapon and aircraft systems engineering and technical specialists and a model manager representative. The composition will be dependent upon the weapons and platform involved.

3.3.1.9 In the event that an aircraft returns from a mission in which an airborne weapon fails to launch or guide, that aircraft will be made available to the WAT for an investigation to determine cause. The squadron will provide the aircraft and maintenance personnel to enable complete post operation system checks and troubleshooting to be accomplished prior to next flight or non associated maintenance action.

3.3.1.10 The total intent of the aircraft impound is fault isolation in cases when the firing platform appears suspect. If the aircraft electronics integrity is interrupted by routine mainte-

nance prior to post operation troubleshooting, the probability of fault isolation is drastically reduced. The period of impound will be kept to a minimum.

3.3.1.11 After the exercise is complete, the team will make an informal report to the squadron Commanding Officer on the results of the analysis and will provide analysis notes to the Naval Air Warfare Center Weapons Division (NAVAIRWARCENWPNDIV), cognizant functional, group, wing, and type commands.

3.3.2 WAT Structure. The WAT is an assemblage of NAVAIRWARCENWPNDIV, Fleet Weapons Support Team (FWST) members and, on an as needed basis, the Naval Surface Warfare Center (NAVSURFWARCEN) telemetry analysts, and Naval Air Technical Data & Engineering Service Command (NATEC) avionics technical representative.

3.3.3 WAT Operation. Navy and Marine Corps squadrons will initiate a request for WAT assistance through the chain of command at least 14 days prior to the missile exercise. Prioritization of WAT support due to resource constraints (personnel or fiscal) may be required by the TYCOMs. The WAT will be available to Navy and Marine Corps squadrons prior to the scheduled exercise and at least 1 day after the completion of the exercise. A debrief will be provided to cognizant commands prior to team departure. For unscheduled exercises, the team will be available as directed. The team leader will be responsible for generating a preliminary report of the exercise. The WAT will be available to cover exercises involving the following weapons:

AIR-TO-AIR	AIR-TO-GROUND	
AMRAAM SIDEWINDER SPARROW	HARM AARGM HARPOON HELLFIRE GBUs	MAVERICK SLAM-ER TALD/ITALD TOW JSOW

3.3.4 Responsibilities.

3.3.4.1 Squadron. During WAT exercises, the squadron performs the following actions:

a. Navy and Marine Corps squadrons will initiate a request for WAT assistance through the chain of command at least 14 days prior to the missile exercise.

b. Assigns a single point of contact to coordinate activities between the squadron and WAT. The Squadron Operations or Maintenance Officer is a preferred point of contact.

c. Informs the cognizant functional, group, or operational wing coordinator of scheduled range times, loading times, aircraft assignments, aircrew brief and debrief times, locations, and preloading missile or weapon check times.

d. Provides personnel when required for troubleshooting and system checks on failed or suspect aircraft systems.

e. In the event of an unsuccessful guided weapon firing attempt, the aircraft will be impounded immediately upon its return. The aircraft will be checked by squadron personnel with

the WAT present to determine cause of failure. Impound action may be waived by the cognizant functional wing, operational, or group Commander.

f. Upon missile expenditure the missile logbook will be destroyed by the Weapons Department/NMCs in a manner to prevent reconstruction of its contents. In the event the missile is the subject of a deficiency report i.e. CODR, EMR, or EER the logbook will be retained until closing action is completed and the Fleet Support Team (FST) determines the logbook is not required.

3.3.4.2 Ship or Station. During WAT exercises, the ship or station is responsible for the following:

a. Assigns a point of contact for WAT functions. Maintains liaison with other command designated WAT points of contact.

b. Provides transportation and berthing for transient WAT members.

c. Provides the necessary unit area access permits or security badges for visiting WAT members.

d. Provides the WAT with a copy of the exercise Missile Configuration Summary (Appendix A). (TALD is excluded from this requirement). This form should contain date of last rework, where stored since rework, captive carry entries, and date of last test.

e. Provides expeditious supply and intermediate maintenance support as may be required to support the weapon exercise and to minimize aircraft impound time in the event of weapon firing problems.

3.3.4.3 Functional, Operational, and Group Commands. Functional levels of command perform the following:

a. Assign an overall coordinator for WAT functions. Maintain liaison with other command designated WAT points of contact. Provide advance notice of projected weapon firing exercises to cognizant type commands.

b. Advise the cognizant TYCOM of conflicts that preclude availability of WAT services.

c. Advise the cognizant TYCOM of weapon firing exercise periods, schedule conflicts, or changes in schedules.

d. Initiate requisite action to correct training support and equipment deficiencies noted during the weapon firing exercise.

3.3.4.4 FWST. Naval Air Warfare Center Weapons Division, Code 674210D, Patuxent River, MD. The NAVAIRWARCENWPNDIV performs the following:

a. Provides WAT services to Navy and Marine Corps squadrons as requested by TYCOMs, during weapon firing exercises to extend training potential, assess weapon performance, certify weapon system effectiveness, and establish and maintain a data base on weapon and weapon system performance.

b. Designates a WAT team leader who will report to the functional, operational, or group overall coordinator. The team leader will organize and coordinate team activity with the squadron, functional, operational, or group coordinator.

3.3.4.5 WAT. The WAT teams support their program by providing the following assistance:

a. Provide advice, instruction, and training as appropriate during aircraft weapon release and control system checks prior to the missile exercise.

b. Monitor aircraft release and control system preoperational test and maintenance, and provide technical assistance.

c. Monitor uploading and downloading of specified weapons.

d. Obtain weapon, aircraft, and launcher data.

e. Assist with post operational weapon system analysis when in-flight discrepancies occur.

f. Conduct data review and write preliminary report.

3.3.4.6 WAT Leader/Member. The WAT leader/member performs the following:

a. Apprises all concerned of scheduled WAT activities.

b. Coordinates and directs team activity.

c. Attends pre-exercise briefs.

d. Monitors operational phase of missile exercise to observe in-flight evolution.

e. Attends aircrew post exercise debriefs.

f. Provides post exercise analysis to squadron.

g. Writes WAT preliminary report.

h. Provides post exercise debriefs that can be made available upon request for the squadron, ship, functional wing, operational group/Type Commander.

i. Monitors and assists in preoperational and post-operational weapon system tests.

j. Obtains information on aircraft weapon system condition and performance.

k. Checks adequacy of publications, aviation support equipment, training, maintenance practices, and logistic support.

l. Participates in data analysis review.

3.3.5 Performance Evaluation and Analysis.

3.3.5.1 NAVAIRWARCENWPNDIV. The NAVAIRWARCENWPNDIV Weapons/Telemetry Analyst performs the following:

a. Conducts in-depth evaluation of pertinent Fleet weapon firings to determine the cause of those failures and recommend and propose solutions. Results shall be reported to Fleet Commanders, TYCOMs, Program Managers (PMs), development and in-service engineering activities, and other concerned activities.

b. Evaluates weapon firing envelopes by comparing theoretical projections and observed results.

c. Provides recommendations for the design of telemetry systems used to assess firings and firing attempts for all Fleet exercises. Provide the requirements for functions to be monitored. Establish methods to provide the weapon system analyst with reduced telemetry data.

d. Monitors system and maintenance performance profiles to identify causative factors in weapon system performance deficiencies.

e. Enters weapon system performance failures via CODRs and monitor until corrective actions are completed as appropriate.

f. Monitors and assists on all telemetered weapon exercises.

g. Ensures that installed telemetry is operational.

h. Provides team leader with quick look and preliminary analysis of telemetry data as soon as possible after each firing.

i. Provides the WAT with telemetry tapes and other specifics and technical information required for analysis and reporting purposes.

j. Participates in data review and analysis.

k. Attends aircrew briefs and debriefs and Commanding Officers' post operation debriefing when possible.

CHAPTER 3.4

Conventional Ordnance Performance Evaluation

Table of Contents

Paragraph	Subject	Page
3.4.1	Conventional Ordnance Performance Evaluation Program Elements	3-4-1
3.4.2	COPE Structure	3-4-2
3.4.3	COPE Operation	3-4-3
3.4.4	COPE Participant Responsibilities	3-4-3

CHAPTER 3.4

Conventional Ordnance Performance Evaluation

3.4.1 Conventional Ordnance Performance Evaluation Program Elements.

3.4.1.1 Conventional Ordnance is any general purpose air to surface weapon that is non-nuclear. Conventional Ordnance Performance Evaluation (COPE) provides the Commander, Naval Air Systems Command (COMNAVAIRSYSCOM) with performance on conventional ordnance dropped during Fleet live ordnance exercises. The data for this information is gathered by COPE teams, who observe and record the performance data during Fleet live ordnance exercises.

3.4.1.2 The intent of these evaluations is to maximize the information available on conventional ordnance performance and to ensure the accurate assessment of hardware and weapon system reliability as a function of Fleet usage. These efforts also benefit Navy and Marine Corps squadrons through immediate feedback on problem areas, which in turn enhance the training evolutions for both ordnance, maintenance, and aircrew personnel.

3.4.1.3 The data generated by the COPE program, combined with the results of laboratory evaluations, provides COMNAVAIRSYSCOM with a comprehensive assessment of the reliability, maintainability, availability, and quality of conventional ordnance. Data generated during COPE exercises serve as a source of information for user activities with lead responsibility for an ordnance commodity and enables them to focus their efforts on suspected problem areas.

3.4.1.4 Data gathered during COPE exercises is analyzed to provide early detection of hardware problems experienced during actual usage. Many of these problems can only be identified through analysis of a number of COPE exercises due to the lack of statistical significance during any one exercise.

3.4.1.5 COPE teams assist in the evaluation of all aircraft, suspension, arming, and releasing equipment, weapon, and related weapon accessory performance to identify potential operational problems and to provide a valid assessment of the ordnance performance.

3.4.1.6 COPE participation is performed solely in the interest of improving and monitoring tactical aircraft weapon system performance and shall not be considered an inspection. Results of any one exercise should not be considered as an evaluation of the Navy or Marine Corps squadron. It should be considered part of an overall assessment of a number of these exercises. This overall assessment provides a meaningful data base upon which relevant decisions on the hardware can be rendered and engineering investigations instituted. It may be used to highlight areas for training emphasis or operational changes. However, it should not be used to “score” specific crews or groups because of the inequities that would result due to varying conditions and operational requirements.

3.4.1.7 The reliability of conventional ordnance as demonstrated during laboratory evaluations has not always been the same as the reliability demonstrated during Fleet usage. COPE efforts provide the necessary information for identifying the source of disparities and a valid data base from which decisions can be formulated to attack the problem areas.

3.4.1.8 In order to provide valid data on the performance of conventional ordnance during live ordnance evolutions, COPE teams must be concerned with the total weapon system being evaluated. This includes the aircraft, aircrew, maintenance personnel, ordnance personnel, and the weapons. Encompassed are all phases of the ordnance exercise, from weapon buildup to performance of the weapons during delivery and target impact.

3.4.1.9 COPE personnel attempt to identify the factors that caused the ordnance to perform improperly through the analysis of available maintenance information, post flight system checks, and range data from COPE team observations.

3.4.1.10 COPE teams participate during the live ordnance evolutions on a non-interference basis. This enables the COPE team to observe the performance of the conventional ordnance in the most realistic usage environment possible.

3.4.1.11 Whenever possible during these field exercises, the COPE team will have an observer at the target range to provide accurate information on the burst performance of the weapons. This information is correlated with the post flight report provided by the pilot to yield the maximum amount of information on the performance of the ordnance during delivery, release, and detonation.

3.4.1.12 In the event an aircraft returns from a mission in which known ordnance failures occurred, but for which no identifiable cause is available, an investigation of the aircraft weapon system will be performed. The squadron will provide the aircraft and maintenance personnel necessary to accomplish this post flight check in an expeditious manner so as to not disrupt flight evolutions. The system checks and troubleshooting should be accomplished before the next flight of the aircraft with live ordnance.

3.4.1.13 After the COPE exercise, the team will make an informal report to the Navy or Marine Corps squadron point of contact, usually the Weapons Officer. Specific information and data will be provided for the submission of quality deficiency reports, explosive mishap reports, hazardous material reports, and technical publication deficiency reports as required.

3.4.1.14 During the exercise, COPE team members record the serial numbers and lot numbers of all the ordnance items used during a flight, including station number on the aircraft and ejector rack. Following the flight, a COPE team member will query the pilot on the performance of the ordnance. He or she will also make a preliminary inspection of the aircraft stations from which live ordnance was delivered to identify any anomalies that may exist.

3.4.1.15 The data gathered during a COPE exercise is entered into the COPE database, and at the end of the fiscal year, an annual COPE summary report is issued. This report provides the comprehensive analysis of the results and assesses overall performance of the conventional ordnance observed during COPE exercises for the year.

3.4.1.16 Most COPE exercises are performed at Naval or Marine Corps Air Stations as part of a live ordnance exercise.

3.4.2 COPE Structure. COPE teams are an assemblage of personnel either from Naval Surface Warfare Center (NSWC), Crane, IN and the NSWC Division, Indian Head, MD. These personnel are trained in the operation of the weapon systems they are evaluating and normally are also involved in the evaluation of those weapons and components in the laboratory.

3.4.3 COPE Operation. Upon receipt of information of an impending live ordnance evaluation, the Naval Surface Warfare Center, Crane IN will contact the squadron Weapons Officer to inquire as to the suitability of the exercise for COPE participation and to make an initial request to participate. This is followed by a message to the squadron requesting authorization to participate. In addition, a message will be sent to the Commanding Officer of the station from which the ordnance will be loaded out or delivered requesting authorization. Participation of the COPE team usually occurs during the portion of the live ordnance exercise when the ordnance of interest is being dropped. COPE exercises involve all types of conventional ordnance delivered, including bombs, rockets, cluster weapons, and guided free-fall weapons. The COPE team leader is responsible for providing a post exercise brief to the squadron Commanding Officer.

3.4.4 COPE Participant Responsibilities.

3.4.4.1 Squadron. During COPE exercises, the squadron performs the following actions:

a. Assigns a single point of contact to coordinate the activities between the COPE team and the squadron. Preferably, the Weapons Officer will be the point of contact.

b. The point of contact should inform the functional groups of the scheduled participation of the COPE team. The point of contact will be the source of information for the COPE team on ordnance schedules, flight operations, range schedules, loading times, and aircraft assignments. The point of contact also designates the personnel to be contacted for performance of postflight checks of aircraft with ordnance failures.

3.4.4.2 Host Station. During COPE exercises, the host station is responsible for the following:

a. Assigns a point of contact for the COPE team regarding station participation in the live ordnance exercise.

b. Informs the COPE team of the necessary access and permits required by the team during the exercise to enable the team to participate fully in the exercise.

3.4.4.3 NSWC Crane, IN responsibilities include the following:

a. Under the direction of the energetic component Fleet Support Team (FST), NSWC Crane, IN will be responsible for coordination of the NAVAIR COPE effort.

b. NSWC Crane, IN will provide the necessary personnel to support both field exercises and data analysis phases of the COPE program.

c. Maintain the COPE database of exercises in order to provide COMNAVAIRSYSCOM with the necessary historical data to make accurate and valid assessments of the performance of conventional ordnance.

d. Participate in Navy and Marine Corps squadron live ordnance exercises.

e. Conduct in-depth analysis of data from live ordnance exercises observed and recorded by COPE personnel. Analysis will be for the purpose of determining the causes of observed failures, trends in material defects which impact the reliability of weapon systems, and formulating recommendations to correct deficiencies. Results will be reported to COMNAVAIRSYSCOM and distributed to concerned Fleet organizations and cognizant activities charged with addressing the problems observed.

f. The planning and execution of all aspects of the Sonobouy element of the COPE program. This includes the determination of evaluation sites, the conducting of the on-site visit, Sonobouy testing, data analysis and report preparation.

g. Preparation and issue of all COPE reports. These reports will be issued to COMNAVAIR-SYSCOM with distribution to concerned Fleet organizations and cognizant activities charged with addressing the problems observed.

3.4.4.4 NSWC Division, Indian Head, MD as a participating activity is responsible for the following:

a. Participate in Navy or Marine Corps squadron live ordnance exercises, specifically those involving the 2.75 and/or 5.00 inch rocket systems.

b. Provide personnel in support of both field exercises and data analysis phases of the COPE program.

c. Maintain the COPE data base. Assist the lead activity in assuring that the historical data is accurate and valid, and provides the information needed to assess the performance of airborne rockets and rocket systems.

3.4.4.5 COPE Teams. COPE teams support the COPE program by providing the following assistance:

a. Participate in Navy and/or Marine Corps squadron live ordnance exercises.

b. Monitor the entire ordnance evolution during these exercises.

c. Record data during the live ordnance exercises including the serial number, lot number, manufacturer, manufacturing date, etc., of all the hardware used during the exercise.

d. Record aircraft loading information including aircraft station, ejector rack station, aircraft number, etc., for each piece of ordnance used during the exercise.

e. Assist in and record the results of postflight weapons system testing when inflight or ordnance failures occur.

f. Monitor loading of all ordnance used during the exercise.

g. Provide range observation whenever possible to record the performance of the ordnance during delivery and detonation.

h. Assist Navy and Marine Corps squadron personnel as requested to benefit those personnel during training exercises.

i. Perform data analysis and write exercise and summary reports containing the results of the analyses.

j. Provide COMNAVAIRSYSCOM with requested information on the performance of specific conventional ordnance weapons.

k. Coordinate COPE exercises with the designated points of contact at the Navy and Marine Corps squadron engaging in the live ordnance evolution.

CHAPTER 3.5

Aviation Ordnance Readiness Review

Table of Contents

Paragraph	Subject	Page
3.5.1	Aviation Ordnance Readiness Review Program	3-5-1
3.5.2	AORR Team Structure	3-5-1
3.5.3	AORR Operation	3-5-1
3.5.4	AORR Participant Responsibilities	3-5-2

CHAPTER 3.5

Aviation Ordnance Readiness Review

3.5.1 Aviation Ordnance Readiness Review Program.

3.5.1.1 The Aviation Ordnance Readiness Review (AORR) provides, at the request of the Type Commander Force Weapons Officer, information on the readiness of ship's weapons departments and aircraft intermediate maintenance departments in support of embarked air wings. The data for this information is gathered by the AORR teams during in-port periods of the workup cycle.

3.5.1.2 In order to provide this data, AORR teams must attempt to identify all shortfalls in ordnance material, support equipment, training, logistics, and publications. The data generated by the AORR program provides the force weapons staff with immediate feedback and comprehensive sources of available hardware or training required to enhance readiness.

3.5.1.3 AORR participation is performed solely at the request of the Force Weapons Officer and shall not be considered an inspection. The results of any one assist visit by AORR teams should not be considered as an evaluation of performance of Weapons Department or AIMD personnel.

3.5.1.4 AORR personnel attempt to identify any requirements prior to deployment of the ship, in order to maximize any acquisition time or training needed.

3.5.1.5 After the AORR, the team will make an informal report at a debriefing of the ship's Weapons Officer, AIMD Officer, Ordnance Handling Officer (OHO) and any other personnel they see fit to attend. The data gathered will be provided to them along with possible solutions to alleviate any shortfalls.

3.5.2 AORR Team Structure.

3.5.2.1 AORR teams are an assemblage of personnel from the FWST, NAVAIRWARCENWPNDIV, Patuxent River, MD. They are primarily assigned to Navy and Marine Corps aircraft wings throughout the world. They are experienced in the weapons systems they are evaluating and are often involved in Fleet live ordnance exercises and WAT. NAVAIRWARCENWPNDIV, Patuxent River, MD being the cognizant FST for in-service weapons system engineering, is uniquely prepared to provide team personnel with the expertise and experience necessary to conduct these reviews.

3.5.3 AORR Operation.

3.5.3.1 Upon receipt of a request by a ship for an AORR, the Force Weapons Officer will contact the NAVAIRWARCENWPNDIV, Patuxent River, MD requesting that an AORR be conducted. At that time, primary and backup dates and team availability will be discussed. This is followed by a message to Patuxent River, MD requesting AORR team participation, with an information copy to the ship. NAVAIRWARCENWPNDIV, Patuxent River, MD will then assign

a team coordinator and team members, and send a message to the requesting ship with information copies to the Force Weapons Officer and the team coordinator. This message will provide names, security clearance data, and mutually agreed upon dates for the team to report aboard.

3.5.3.2 The scheduled time frame for the AORR is 5 days to allow for unforeseen problems or delays such as scheduled ammunition onloads, although most are completed in 3 to 4 days. Holidays should be avoided if possible.

3.5.3.3 Main areas covered by the AORR consist of but are not limited to: training, publications, Airborne Weapons Support Equipment (AWSE), magazines, conventional ordnance, all missile systems, peculiar items such as Improved Tactical Air Launched Decoy (ITALD), and nitrogen purification systems.

3.5.3.4 New ordnance or missile systems added to Fleet inventories are incorporated into the AORR as information becomes available.

3.5.3.5 AIMD (700 Division) is also covered by the AORR due to the interface of armament equipment supported at the I-level and testing, repair, and stowage of weapons related material. In this capacity, GSE and PME labs are also briefly included.

3.5.4 AORR Participant Responsibilities.

3.5.4.1 Ship. During the AORR, the ship performs the following actions:

a. Assigns a single point of contact to coordinate the activities between the AORR team and ship's company personnel. Preferably the Ordnance Handling Officer will be the point of contact.

b. The point of contact should inform the AIMD Officer and Weapons Department personnel of the scheduled AORR and assign any required escorts with access to magazine spaces, publications technical library, armament support equipment spaces, and nitrogen purification facility required by the AORR team. The AIMD Officer should provide a point of contact in AIMD, preferably the Work Center 700 Supervisor, to provide any access to K-pool spaces, PME lab, and I-level technical publications library.

3.5.4.2 The NAVAIRWARCENWPNSDIV is responsible for the following:

a. Assign a team coordinator and provide necessary personnel to conduct the AORR.

b. The AORR team coordinator assigns individual team members to their particular areas.

c. The AORR team conducts a debrief of the review and provides a report to the Weapons Officer, OHO, AIMD Officer or their representatives.

d. The AORR team conducts a debrief of the review and provides a copy of the report to the Force Weapons Officer and his/her staff at their convenience and as soon as possible after the ship's debrief.

e. Assist the Force Weapons Officer, Ship's Weapons Officer, OHO, AIMD Officer, and their staffs in formulating recommendations to correct deficiencies.

f. Assist Navy personnel as required, to benefit those personnel during and after the review in any way possible.

g. Provide Navy personnel with addresses and phone numbers of points of contact in areas of concern in order to address any problems.

h. Assist in obtaining test equipment, bit parts, training, publications, logistics, and any other assistance requested when the normal procurement of such items is either unavailable or unscheduled.

i. Provide suggestions, recommendations, and assistance in any aspect of ordnance handling, breakout, inspection, assembly, configuration, testing, and maintenance in order to enhance readiness prior to deployment.

SECTION 4

Material Readiness and Integrated Logistics Support

Table of Contents

Chapter	Subject	Page
4.1	Introduction	4-1-1
4.2	Integrated Logistics Support	4-2-1
4.3	Material Management	4-3-1
4.4	Maintenance Engineering Management	4-4-1
4.5	Maintenance Management	4-5-1
4.6	Deficiency Reporting	4-6-1
4.7	Technical Data	4-7-1

CHAPTER 4.1

Introduction

Table of Contents

Paragraph	Subject	Page
4.1.1	General	4-1-1
4.1.2	The Maintenance Process	4-1-1
4.1.3	Life Cycle Maintenance Considerations	4-1-1
4.1.4	Integrated Logistics Support Policy and Readiness	4-1-2
4.1.5	Resource Sponsor	4-1-2
4.1.6	Field Activity Responsibilities	4-1-3

CHAPTER 4.1

Introduction

4.1.1 General. This section addresses the interactive programs designed to provide Integrated Logistics Support (ILS). In addition, these programs ensure that material readiness is maintained for all in-service ordnance. The ordnance maintenance program comprises a number of interactive programs that have been designed to address the multitude of functions essential for the logistics support of a weapon system throughout its life cycle. The programs discussed in this section provide the objectives, responsibilities, and guidance to meet asset readiness objectives. Asset readiness provides a meaningful measurement of ordnance serviceability. Basic considerations in this measurement are the quantity of serviceable assets in relation to total assets in inventory, up to the prescribed inventory objective. The inventory objective represents ordnance material to meet Naval weapons requirements.

4.1.2 The Maintenance Process. The Naval Ordnance Management Policy (NOMP) is an ILS function under the direction of the Chief of Naval Operations (CNO) (N411) who has further delegated the management of the maintenance program to the Commander, Naval Air Systems Command (COMNAVAIRSYSCOM) Logistics Management Division. Responsibilities include establishing and maintaining ILS elements during the weapon system's life cycle.

4.1.3 Life Cycle Maintenance Considerations.

4.1.3.1 The cost of maintenance over the life cycle of a weapon system is significant. This cost is directly related to the supportability characteristics designed into the system as a function of ILS. ILS began to be recognized as a discipline in the mid-1960s. Prior to that time, maintenance support planning had been characterized by separate groups planning and managing what came to be recognized as elements of ILS. The ILS concept sought to draw these groups together under the direction of three driving concepts:

a. That the decisions made in the design process inescapably impact the maintenance process and its potential efficiency, as well as costs during the production and operational phases of the life cycle.

b. That the maintenance plan is the foundation document for all other maintenance-related support planning.

c. The AIM-9X SIDEWINDER is a system being procured at the lowest possible cost under acquisition reform principles including minimum Organizational and Intermediate level maintenance functions for the AUR and having the prime contractor Raytheon Company be responsible for depot maintenance.

d. That all ILS elements are related to each other, decisions about support planning must not change one element without considering what impact this will have on the other elements.

4.1.3.2 Throughout ILS development, a measure of effectiveness has been sought. The concept of readiness now satisfies this need. It is also a CNO policy that system readiness objectives

and thresholds serve as the basis for evaluating logistics support and planning and determining logistics support requirements. Resources to achieve readiness shall receive the same emphasis as those required to achieve schedule and performance objectives. Chapter 4.2 presents an overview of the logistics considerations during the life cycle of a weapon. Chapter 4.3 contains an explanation of assets and fiscal resources to support system readiness.

4.1.4 Integrated Logistics Support Policy and Readiness.

4.1.4.1 The Deputy CNO (Logistics) (N4) has been delegated the responsibilities and action for developing consolidated Navy ILS policy, guidance, and readiness objectives. SECNAVINST 5000.2 series assigns ILS responsibilities and consists primarily of the following tasks:

a. Develop consolidated Navy ILS policy and guidance following SECNAVINST 5000.2 for all echelons covering all life cycle phases (concept through disposal).

b. Review all operational requirements and all major acquisition documents to ensure the adequacy of logistics planning and resources in relation to readiness objectives established by project sponsors and to ensure compliance with applicable policy requirements.

c. Act as technical agent for assisting project sponsors in establishing readiness objectives, measures and ensure sponsor-established readiness objectives have a reasonable degree of consistency Navy wide.

d. In conjunction with CNO Director of Test, Evaluation and Technology Requirements and project sponsors, ensure that preparation for certification for operational evaluation and subsequent operational test and evaluation are adequate to allow a sound assessment of logistics thresholds and readiness objectives; i.e., reliability, maintainability, testability, operational availability, etc.

e. Assess the results of the logistic review group operational test and evaluation reports for corrective action recommendations appropriate at Program Milestone C decision meetings.

f. Provide adequate resources for the formal training and career development of ILS professionals as required by SECNAVINST 5000.2.

g. Establish standard Navy logistics requirements and planned funding methodologies and coordinate with CNO (N411) and system commands.

4.1.4.2 Asset readiness has been established as a meaningful way of evaluating the ILS system. Basic consideration of this measurement is serviceable assets. The asset readiness objective is the goal to be achieved at the end of each fiscal year and is a percentage measure. That objective is established yearly based on resources available for maintenance and maintenance support.

4.1.5 Resource Sponsor.

4.1.5.1 The resource sponsor of the NOMP is the Director, Supply, Ordnance, and Logistics Operations Division (N41). The Ordnance Programs and Policy Branch (N411) budgets and funds the Aviation Maintenance Program. The Ordnance, Maintenance, Policy and Resources Section (N411E) is responsible for generation of the Operations and Maintenance, Navy (O&M,N) funding for maintenance of ordnance. For setting the maintenance policy for ordnance. This manual defines management and maintenance policy for ordnance.

4.1.5.2 The maintenance program for ordnance is an ILS function under the direction of the Logistics Management Division. Responsibilities include program management, maintenance planning, program coordinating, budgeting, and evaluating program progress. Maintenance plans are developed for each weapon system, which serve as the basis for maintenance tasks performed at each maintenance level. Workload planning forecasts are used and adjusted to provide a basis for budget submission and the time-phased positioning of material. For AIM-9X, there is no scheduled workload or projected workload at the Weapon Support Facilities (WSF) except Receipt, Segregation, Storage, and Issue (RSSI) functions. Minimum repairs are authorized at the lower levels of maintenance. Raytheon maintains the right to repair or replace assets as they see fit. There is no scheduled maintenance for Fleet activities except for a 180 day Maintenance Inspection Interval which consists of the following: All AIM-9X tactical and Captive Air Training Missiles (CATMs) in use (Out-of-container) require a 180 day visual inspection. In addition, every 180 days (A-shore) or at the end of a deployment/prior to containerization (Afloat) Common Munitions Built-In Test/Reprogrammable Equipment (CMBRE) BIT/Inquiry will be completed for all affected assets, utilizing procedures contained in NA 140-6.1 Weapons Assembly Manual (WAM). Using the CMBRE utility feature, both CMBRE log file and missile event data files shall be downloaded from the AIM-9X maintenance card file for all missiles meeting the above criteria. The data shall be uploaded utilizing the CMBRE module located on the All Weapons Information System (AWIS) website at https://awis.navair.navy.mil. For JDAM/LJDAM, there is no scheduled workload or projected workload at the Weapon Support Facilities (WSF). There are no scheduled maintenances for Fleet activities. At the end of a cruise if aboard ship, and at the end of deployment if deployed, download the maintenance log file of all broken out tail kits and provide report data to the CFA using the CMBRE utility feature. JDAM/LJDAM reprogramming will be required as directed by the Technical Directive (TD)/Airborne Software Change (ASC).

4.1.5.2.1 For JDAM/LJDAM/DMLGB, there is no scheduled workload or projected workload at the WSF. There is no scheduled maintenance for Fleet activities. At the end of a deployment/detachment (Ashore/Afloat), using the CMBRE utility feature, download the maintenance log file of all broken out KMU JDAM tail kits and WGU-53/B DMLGB kits and provide maintenance log file data to the CFA via the AWIS CMBRE module. JDAM/LJDAM/DMLGB Reprogramming will be required as directed by the TD/ASC.

4.1.6 Field Activity Responsibilities.

4.1.6.1 The maintenance engineering function sets forth design requirements to anticipate in-service needs for ease of maintenance and operational reliability. That includes testing, repair, provisioning, technical instructions, and all related requirements. The COMNAVAIRSYSCOM transfers these functions to designated cognizant maintenance engineering activities for in-service weapon system engineering. Chapter 4.4 outlines the maintenance engineering function, including activity assignment, tasking, functions, and maintenance plans. Chapter 4.6 explains the deficiency reporting program and related field activity responsibilities.

CHAPTER 4.2

Integrated Logistics Support

Table of Contents

Paragraph	Subject	Page
4.2.1	General	4-2-1
4.2.2	ILS Elements	4-2-1
4.2.3	Logistics Support Analysis	4-2-2
4.2.4	Maintenance Planning	4-2-3
4.2.5	Life Cycle Logistics	4-2-6
4.2.6	ILS Variations	4-2-7
4.2.7	Minimum ILS Products	4-2-7

List of Illustrations

Figure	Title	Page
4-2-1	Logistics Support Analysis Record Master Files	4-2-4

CHAPTER 4.2

Integrated Logistics Support

4.2.1 General.

4.2.1.1 Integrated Logistics Support (ILS) is a unified and interactive approach to the management and technical actions necessary to:

a. Cause support considerations to influence systems and equipment requirements and design.

b. Define support requirements that are related to systems and equipment design and to each other.

c. Acquire planned support, operational systems, and equipments.

d. Provide the required support at the least life cycle cost.

4.2.1.2 ILS begins in the pre-concept phase of a system's life cycle and continues during the entire life of a system.

4.2.2 ILS Elements. The management discipline that came to be recognized as ILS contains ten elements. Prior to being recognized as the ILS elements, military support planning had been characterized by separate groups planning and managing these elements. The ILS concept sought to draw these separate groups together into a systems management discipline. SECNAVINST 5000.2 series, integrated logistics support in the acquisition process, is used to establish ILS policy and assign responsibilities. This manual defines the ILS elements as:

a. Maintenance Planning. The process conducted to evolve and establish maintenance concepts and requirements for the life time of a material system.

b. Manpower and Personnel. The identification and acquisition of military and civilian personnel with the skills and grades required to operate and support a material system over its life time during peacetime and wartime.

c. Supply Support. All management actions, procedures, and techniques used to determine requirements to acquire, catalog, receive, store, transfer, issue, and dispose of secondary items. This includes provisioning for initial support as well as replenishment supply support.

d. Support Equipment. All equipment (mobile or fixed) required to support the operation and maintenance of a material system. This includes associated multiuse end items, ground handling and maintenance equipment, tools, metrology and calibration equipment, test equipment, and automated test equipment. It includes the acquisition of logistics support for the support and test equipment itself.

e. Technical Data. Recorded information regardless of form or character (such as manuals and drawings) of a scientific or technical nature. Computer programs and related software are

not technical data; documentation of computer programs and related software are. Also excluded are financial data or other information related to contract administration.

f. Training and Training Support. The processes, procedures, techniques, training devices, and equipment used to train civilian and active duty and reserve military personnel to operate and support a material system. This includes individual crew training, new equipment training; initial, formal, and on-the-job training and logistics support planning for training equipment and training device acquisitions and installations.

g. Computer Resources Support. The facilities, hardware, software documentation, manpower, and personnel needed to operate and support embedded computer systems.

h. Facilities. The permanent or semi-permanent real property assets required to support the material system, including conducting studies to define types of facilities or facility improvements, locations, space needs, environmental requirements, and equipment.

i. Packaging, Handling, Storage, and Transportation. The resources, processes, procedures, design considerations, and methods which ensure that all system, equipment, and support items are preserved, packaged, handled, and transported properly, including environmental considerations, equipment preservation requirements for short and long-term storage, and transportability.

j. Design Interface. The relationship of logistics related design parameters, such as reliability and maintainability, to readiness and support resource requirements. These logistics related design parameters are expressed in operational terms rather than as inherent values and specifically relate to system readiness objectives and support costs of the material system. Design interface seeks to make designers more conscious of how the equipment will make demands on the logistics system, rather than simply discussing inherent reliability and maintainability values (i.e., mean time between maintenance actions rather than mean time between failure). It also seeks to provide product specifications which quantify demands on the logistics system as a measure of system performance rather than inherent technical factors of design.

k. Related Areas. Closely related and often intertwined, areas include configuration management, system safety, quality assurance, standardization, human engineering, corrosion prevention, energy management, and hazardous materials control and management.

4.2.3 Logistics Support Analysis. Both ILS and Logistics Support Analysis (LSA) have the objectives of improving supportability, reducing costs, and increasing system effectiveness. LSA is the process which analytically determines logistic support requirements and interfaces the ILS effort with system engineering to influence the design of the system or equipment for supportability. It is systematic in its approach to designing the logistic support system, considering interfaces with the mission system or equipment design and operational constraints. It is interactive in accomplishments consistent with level of indenture progression of system or equipment design. In its simplest form, the LSA process is a relative set of tasks and subtasks performed to meet the LSA objectives. The tasks are designed to:

a. Establish supportability design requirements.

b. Develop viable support concepts and support system alternatives.

c. Evaluate design, support, and operational concept alternatives.

d. Identify detailed logistics resource requirements which satisfy readiness requirements.

e. Verify achievement of supportability requirements.

4.2.3.1 The LSA process integrates various scientific and engineering analysis methods using the system engineering process. LSA provides a tailored approach to the system engineering process to establish supportability influence on the system or equipment design and the design of the support system. The process originates with the identification of logistic needs which are defined into functional requirements. Alternative support systems are synthesized to satisfy the functional requirements. Trade-off analyses are conducted to weigh and compare the system design, functional requirements, and alternative support systems to formulate system or equipment design changes which will enable better, more cost effective supportability, the optimal support system, the ILS resources required, and the optimum minimization of hazardous materials.

4.2.3.2 The LSA process defined in MIL-HBK-502 includes information and data to enable attainment of the general LSA objectives.

4.2.3.3 Use of LSA Products. The performance of each task and subtask results in narrative reports, LSA records, and other data products, including data from other related engineering fields. The applicable data products are updated each time a task or subtask is reiterated or updated. The iteration may occur because of progression into a new acquisition phase or because of changes in the hardware design or operational parameters that impact LSA. LSA documentation is used to support related design specifications, to integrate the ILS elements into an optimal support system, and to determine detailed logistics support resources necessary to meet readiness goals. LSA documentation also provides the basis for preparing support plans relative to personnel and training, maintenance, supply support, support equipment, facilities, and other data products.

4.2.3.4 The LSA Record (LSAR). LSAR data provides the ILS technical database applicable to all material acquisition programs through proper tailoring to satisfy logistics support acquisition. LSAR data records, data element definitions, data field lengths, and data formats are described in MIL-HBK-502. The specific data entry media, storage, and maintenance procedures are left to the discretion of the performing activity. LSAR data may be prepared and stored manually, automatically through the use of current computer technology, or semi-automatically by combining manual and automatic techniques. Figure 4-2-1 lists the LSAR master files.

4.2.3.5 JDAM does not conform to the standard LSA process requirements. JDAM utilized the LSA and LSAR process during EMDI, the LSA and LSAR contract requirement were deleted due to the 20-year extend warranty and configuration control remaining with the JDAM contractor.

4.2.3.6 Raytheon Company has Total System Performance Responsibility (TSPR) for AIM-9X. TSPR is the acceptance of responsibility by Raytheon to do what is necessary and sufficient to produce, deliver, warrant, support and sustain an AIM-9X system that is affordable and readily available.

4.2.4 Maintenance Planning. The high cost of equipment acquisition and integrated logistics support has necessitated the development and implementation of uniform maintenance planning policies for systems and equipment.

Operation and Maintenance Requirements	Data Record A
Item Reliability and Maintainability Characteristics	Data Record B
Failure Modes and Effects Analysis	Data Record B1
Criticality and Maintainability Analysis	Data Record B2
Operation and Maintenance Task Summary	Data Record C
Operation and Task Analysis	Data Record D
Personnel and Support Requirements	Data Record D1
Support Equipment and Training Material Description and Justification	Data Record E
Unit Under Test and Automatic Test Program(s) Description	Data Record E1
Facility Description and Justification	Data Record F
Skill Evaluation and Justification	Data Record G
Support Items Identification	Data Record H
Support Items Identification (Application Related)	Data Record H1
Transportability Engineering Characteristics	Data Record J

Figure 4-2-1. Logistics Support Analysis Record Master Files

4.2.4.1 Maintenance planning is applicable to:

a. All new development equipment procured by systems commands or CNO program managers, their field activities, or inventory control points (including that for which the requirements of SECNAVINST 5000.2 series are applicable.

b. Existing in-service equipment for which new or extensively modified support scenarios (e.g., intermediate level or contractor support, etc.) are planned.

c. Any commercial or off-the-shelf type equipment for which organic integrated logistics support planning and subsequent organic maintenance capability at any level is expected.

4.2.4.2 Maintenance planning shall be accomplished and maintenance plans issued and maintained for all systems and equipment. The maintenance plan will be used to translate the maintenance approach delineated in the system or equipment maintenance concept into a minimum set of task requirements which must be accomplished to ensure its ongoing readiness. As a minimum, it will contain the following information: a short narrative equipment description; a concise summary of the maintenance actions required for equipment support; a top-down listing of the basic repairable number and drawing nomenclature to the shop replaceable assembly level; the source, maintenance, and recoverability codes assigned to each of the basic repairables, projected or current parts usage data (i.e., technical factors); and a list of common and special purpose support equipment required including any maintenance assist module requirements. Approved maintenance plans will be used to develop and procure the logistics requirements necessary to support systems or equipment in the intended operational environment. Maintenance plan format is at the discretion of systems commands in accordance with current directives. The Program Manager (PM) and Logistics Manager (LM) shall ensure that:

a. The data necessary for the development of maintenance plans or revisions are developed utilizing a clearly defined process that: (1) translates the requirements of the established system maintenance concept into a clearly defined set of maintenance requirements that are tailored to consider the inherent design features and failure modes of the equipment; (2) encompasses the reliability centered maintenance analysis process; and (3) subjects the equipment to a Level of Repair Analysis under MIL-PRF-49506. The potential increase in readiness as a result of using organizational or intermediate level repair shall be investigated and shall be a major factor in making maintenance level decisions as a cost-effective means is sought to provide the level of support required to meet the system's specified readiness.

b. Maintenance plans and changes are prepared and maintained and contain at least the minimum contents referred to above. When a design change or other action necessitates the revision of a maintenance plan, the revised plan shall be documented and issued in a format compatible with that used in the original.

c. Maintenance plans and the changes thereto are distributed to Type Commanders (TYCOM), the Naval Technical Services Facility, the cognizant program support inventory control point, cognizant field activities, systems command representatives, logistics managers, logistics element managers, and other logistics support activities for implementation and action.

d. Validation and verification of ILS products includes comparison of technical publications, provisioning parts list, preventive maintenance documentation, etc., to insure that source, main-

tenance, and recoverability coding in these documents agrees with that in the approved maintenance plan.

4.2.5 Life Cycle Logistics. Life cycle logistics is the series of phases that constitute the scenario of a product from the time concept planning is started to disposal. The following phases make up life cycle logistics:

a. Pre-concept Formulation Phase. During this period, the projected need is validated and program initiation documents are prepared. Broad requirements and mission statements are identified and preliminary funding requirements are submitted. ILS and LSA inputs include the accomplishment of a use study, preparation of supportability constraints, an ILS concept, and an LSA strategy for the proposed system or equipment.

b. Concept Exploration Phase. During concept exploration, alternative proposals to satisfy the identified need are evaluated and compared in terms of performance, cost, schedule, readiness, and supportability parameters. System level analyses that affect design and operational concepts, gross logistics resource requirements, and relative design and operational and support characteristics to system or equipment readiness are defined. The ILS and LSA products include readiness and cost improvement targets, support concept alternatives, and supportability-related design and support system objectives.

c. Demonstration and Validation Phase. The demonstration and validation phase transforms the conceptual design into practical design criteria suitable for hardware development. This is accomplished by verifying that technical uncertainties underlying the design have been removed. The design may be evaluated with advance development models. The ILS and LSA products include a firm support concept, firm supportability-related design goals and thresholds, and readiness and support system parameter objectives. DODI 5000.2 requires that all programs, regardless of acquisition category, perform and maintain a Programmatic Environmental, Safety and Occupational Health (ESOH) Evaluation (PESHE). The evaluation consists of the following five analyses:

(1) National Environmental Policy Act.

(2) Environmental Compliance.

(3) System Safety and Health.

(4) Hazardous Materials.

(5) Pollution Prevention.

DODI 5000.2 Section E, 7.1.6 states, “The PM shall prepare a PESHE document early in the program life cycle (usually Milestone B)”. ESOH analyses are also required during Milestone A.

d. Full Scale Development Phase. The full scale development phase transforms the design concept that was validated in the preceding stage into engineering development models and detailed specifications. These models are fabricated in the physical configuration called for in the allocated baseline specification. The purpose of this phase is to conduct functional and environmental tests using models or prototypes to verify that the design satisfies specified performance requirements. The ILS effort in this phase is heavily influenced by maintenance

planning to identify detailed logistics support resources required to meet readiness objectives and actions required to correct deficiencies discovered during tests and evaluations. Logistics and maintenance support requirements and solutions to deficiencies are validated through operational testing. Detailed analyses are conducted to identify preventive and corrective maintenance, calibration, and servicing requirements. Logistics element analyses are accomplished and firm maintenance plans are developed.

e. Production and Deployment Phase. Production during this phase translates the engineering model or prototype developed and optimized in the full scale development phase into production hardware for delivery to the Fleet. Manufacturing, processing, and tooling; inspection and test procedures; and management control techniques are designed specifically for reproduction of the prototype on an economical mass production basis. Deployment is concerned with the successful introduction of the weapon system or equipment into Fleet operational use. This phase primarily involves the establishment of an effective support base performing required training and problem resolution through feedback mechanisms. ILS and LSA actions include continued assessment of supportability and readiness, improvement of problem areas, initiation of planning for post-production support, maintenance and update of the LSAR during the life cycle of the system or equipment.

f. Operation and Support Phase. This is the phase where proper planning and support pays off in minimizing the maintenance and support burden. It is also the phase that encompasses mid-life review which can result in modernization decisions or product improvements. ILS tasks considered during this phase include maintenance management, maintenance operations review of personnel requirements, evaluation and adjustment of service life and maintenance schedules, phase-down of training, maintenance of publications, and a host of other ILS support tasks. During the operation and support phase, the LSA is maintained and data records are updated as operational experience is obtained.

g. Disposal Phase. The disposal phase of the system life cycle begins with the system being classified as obsolete and a disposal plan prepared. ILS considerations include resale versus discard analysis, environmental impact studies, declassification instructions, and determining and reporting excess assets. After these considerations are made and the disposal plan is completed, the demilitarization actions begin. This effort includes reclaiming of precious metals, recycling appropriate material, rescinding publications, dismantling facilities, and securing explosive material that is no longer maintained as active inventory.

4.2.6 ILS Variations. In practice, numerous acquisition programs deviate from the classic sequence of phases. An acquisition may be initiated in the full scale development phase. Accelerated acquisition programs may proceed through the sequence of phases too rapidly to accommodate the ILS and LSA data accumulation process. A product improvement program may be conducted in lieu of a new system or equipment procurement, or a commercial system or equipment already in production may be procured with no developmental effort involved. The acquisition phase sequence may be as simple as a preproduction test followed by a production test. The actual phase sequence applicable to a program is a vital consideration in tailoring the LSA and LSAR requirements to achieve the required degree of supportability on a timely basis.

4.2.7 Minimum ILS Products. It is the program manager's responsibility to see that these products are procured and available, regardless of which activity, functional code, etc., actually

does the procurement. The Program Manager is ultimately responsible for the support products at all levels of maintenance for the platform system or equipment. Acquisition programs which fail to meet these and other minimum standards as set forth by CNO are not to be introduced into the Fleet without approval of the CNO.

4.2.7.1 Minimum ILS Product Requirements are:

a. Maintenance plan.

b. Maintenance manuals, verified to be under the maintenance plan, for all levels of maintenance.

c. Operator or user manuals (hardware and software).

d. Interim or initial spare parts.

e. Provisioning technical documentation.

f. Support equipment as shown in the maintenance plan for all levels of maintenance.

g. Navy training plan, approved by CNO.

h. Training curricula, equipment, materials, and facilities as described in the Navy training plan.

i. ILS Plan, Operational Support Summary, and Phased Support Plan.

j. Logistics requirements and funding as required.

k. Logistics requirements and funding plan.

l. Hazardous Material Control and Management (HMCM) Program Plan.

4.2.7.2 New acquisition reform minimum requirements are:

a. Maintenance Planning.

b. Repair Analysis.

c. Support and Test Equipment.

d. Supply Support.

e. Manpower, Personnel, and Training.

f. Facilities.

g. Packaging, Handling, Storage, and Transportation.

h. Logistics requirements and funding as required.

i. Logistics requirements and funding plan.

j. HMCM Program Plan.

k. Post Production Support.

l. Demilitarization Plan.

CHAPTER 4.3

Material Management

Table of Contents

Paragraph	Subject	Page
4.3.1	General	4-3-1
4.3.2	Background	4-3-1
4.3.3	Policies and Concepts	4-3-1
4.3.4	Ammunition Material Condition Codes	4-3-2
4.3.5	Depot and Field Level Repairables	4-3-2
4.3.6	Provisioning	4-3-2
4.3.7	Source, Maintenance, and Recoverability Codes	4-3-3
4.3.8	Configuration Management	4-3-3
4.3.9	Warranty Management	4-3-5
4.3.10	Repair Part Procurement	4-3-6
4.3.11	Depot Level Maintenance	4-3-6
4.3.12	Programming and Budgeting for Depot Level Repairables	4-3-6
4.3.13	Depot Repair	4-3-7
4.3.14	Depot Repair Funding	4-3-7
4.3.15	Navy Stock Fund/Appropriation Purchase Account	4-3-7
4.3.16	Designated Overhaul Point	4-3-9
4.3.17	Depot Repair Scheduling	4-3-9
4.3.18	Repair of Weapons Aeronautical Components	4-3-10

Table of Contents - contd.

Paragraph	Subject	Page
4.3.19	Inventory Managers	4-3-11
4.3.20	Stockage Policy	4-3-11
4.3.21	Navy Inventory Levels	4-3-11
4.3.22	Allowance Lists	4-3-11
4.3.23	Fixed Allowances for Depot and Field Level Repairables	4-3-12
4.3.24	Asset Reporting Requirements	4-3-13
4.3.25	Depot Level Repairable Movement and Reporting Procedures	4-3-14
4.3.26	Master Repairable Item List	4-3-15
4.3.27	Cannibalization	4-3-16
4.3.28	Supply Responsibilities	4-3-21
4.3.29	Navy Supply System	4-3-22
4.3.30	Material Cognizance Assignment	4-3-24
4.3.31	Hazardous Material Control and Management Program	4-3-25
4.3.32	Supply Reference Publications	4-3-27
4.3.33	List of Navy Aviation Publications Issued by Naval Operational Logistics Support Center	4-3-28

List of Illustrations

Figure	Title	Page
4-3-1	SM&R Code Change Request	4-3-4
4-3-2	Sample Cannibalization Request	4-3-18
4-3-3	Sample Cannibalization Summary	4-3-20

CHAPTER 4.3

Material Management

4.3.1 General. This chapter identifies and discusses Naval weapons material management policies and responsibilities.

4.3.2 Background.

4.3.2.1 The size of the Navy's repairables program, the program's dependency on responsible industrial capability and capacity, its rapid growth rate, and the high dollar value of repairable materials dictate the need for comprehensive repairables management policies and procedures. Because of the scope and volume of repairable tasks, computers must be used effectively to manage the program. This requires that repairables management be strictly and uniformly defined, standardized, regulated, and controlled, and that operational requirements and deficiencies be clearly recognized.

4.3.2.2 In addition to Navy initiatives, the Department of Defense (DOD) is striving to reduce logistics support costs by expanding interservice support. The thrust of this effort focuses on two elements: depot maintenance inter-servicing and integrated management of wholesale stocks. The objective of the depot maintenance inter-servicing effort is to consolidate the repairables workload of two or more services at a single depot when this is cost effective and will not degrade the support of the operating forces. Integrated management is a continuation of the DODs "one item, one manager" policy, in which only one service is designated as the wholesale manager for each repairable in the DOD inventory.

4.3.2.3 To ensure the optimum availability of the repairables to sustain established levels of full system capability, efficient management systems must be utilized.

4.3.3 Policies and Concepts. There are several significant principles and functions that must be followed to achieve success in the material management program.

4.3.3.1 Close liaison must be established and maintained between supply and maintenance, both organizational and intermediate level, in achieving the common goal of maximum weapon system operational readiness.

4.3.3.2 Material management involves a direct relationship between the two complex operations of maintenance and supply. It is important that these operations have a single point of contact for coordinating those functions that are common to both. The success of material management at any activity depends largely on the success of this coordination effort. It is imperative that supply and maintenance personnel be familiar with responsibilities of both. Material control branches are contact points for maintenance operations. Supply support centers are contact points for supply operations.

4.3.3.3 A meeting will be held at least weekly between supply and Organizational and Intermediate level maintenance representatives to discuss Non Mission Capable Supply (NMCS) and Partial Mission Capable Supply (PMCS) and other high priority-related requirements.

4.3.3.4 A meeting will be held at least monthly between supply and Organizational (O-level) and Intermediate (I-level) maintenance representatives to resolve problems, establish local procedures that do not conflict with this manual, and to promote material support effectiveness. The meeting will be chaired by the Aircraft Intermediate Maintenance Department/Fleet Readiness Center (AIMD/FRC) OIC and shall include appropriate O-level, I-level, group supply supervisors, and staff representatives.

4.3.3.5 The use of sophisticated management techniques and devices, such as mechanized cards, files, and listings; visual information display system boards; and minicomputers will improve material management.

4.3.3.6 Information procedures should be adapted to automated techniques or visual display systems where capabilities exist. This eliminates the need for manually processing documents and records and provides real-time knowledge of the availability of required material.

4.3.4 Ammunition Material Condition Codes. These alpha character codes separate and identify the physical condition of ammunition material (i.e., codes A through D identify ammunition material in a serviceable condition, while codes E through P identify ammunition material in an unserviceable state). See Volume III, Appendix "C" of this manual or NAVSUP P-724 for further definition and application.

4.3.5 Depot and Field Level Repairables.

4.3.5.1 Depot level (D-level) repairables and mandatory turn-in repairables must be turned in for repair at the designated overhaul points when they are beyond the capability of field level maintenance facilities. D-level repairables can be repaired at the lowest maintenance level that has the required capability in accordance with Source, Maintenance, and Recoverability (SM&R) codes, but can only be condemned at the D-level or at the direction of the depot maintenance activity. D-level repairables are identified by material control codes E, G, H, Q, and X.

4.3.5.2 Field level repairables are items which can be repaired at O-level and I-level maintenance facilities. When field level repairables cannot be repaired locally and there are no designated overhaul points listed in the Individual Material Readiness List (IMRL), field level repairables should be disposed of locally. An exception to repair or disposal action below D-level maintenance may occur during depot networking of the end item or equipment in which it is installed. Field level repairables are assigned material condition code "D." See Volume III, Appendix "C" of this manual or NAVSUP P-724 for repairable material condition codes.

4.3.6 Provisioning. Provisioning is the process of determining the range and quantity of items, such as spares and repair parts, special tools, test equipment, and support equipment, required to support and maintain an end item of material for a specified period of service. Provisioning includes the identification of items of supply, the establishment of data for cataloging, preparation of technical manuals and allowance tables, and the preparation of instructions to ensure delivery of necessary support items with related end articles. Provisioning encompasses all the actions necessary to ensure material support of the operational weapon system. A basic input to the provisioning process is the maintenance plan, which identifies the repairable items and delineates their levels of removal, repair, and disposal.

4.3.7 Source, Maintenance, and Recoverability Codes.

4.3.7.1 Source, Maintenance, and Recoverability (SM&R) codes are used primarily to identify the source of supply for spares, repair parts, and items of support equipment, and the levels of maintenance authorized to maintain, repair, overhaul, or condemn the item. SM&R codes are detailed in the illustrated parts breakdown section of the applicable maintenance manual or NAVSUP P-719.

4.3.7.2 The SM&R code is a uniform six-position code consisting of a two-position source code, a two-position maintenance code, a one-position recovery code, and a one-position optional supplemental code (rarely used). Through the application of sound maintenance and supply experience and judgment, the SM&R code can control the range of parts purchased for support. Further, the SM&R code can expedite and improve the maintenance, repair, and overhaul times by providing supply and maintenance implications.

4.3.7.3 Uniform SM&R codes shall be used in all commodity areas where provisioning is practiced and shall be consistent with approved maintenance plans. SM&R codes apply to:

a. All new equipment being provisioned.

b. An equipment when it is reprovisioned.

4.3.7.4 Figure 4-3-1 depicts the format for requesting SM&R code changes of repairable items. All change requests must be submitted to COMNAVAIRSYSCOM, in the prescribed format. COMNAVAIRSYSCOM serves as the focal point for processing and tracking SM&R code change requests.

4.3.7.5 COMNAVAIRSYSCOM will prepare and release all SM&R code change requests. For an approved change request, a letter directing implementation will be transmitted to the inventory control point, either the Naval Supply Systems Command Weapon Systems Support (NAVSUP WSS), Philadelphia, PA or NAVSUP Global Logistics Support (GLS AMMO), Mechanicsburg, PA. For a disapproved change request, a letter citing the reasons will be transmitted to the originator.

4.3.7.6 When distribution has been made by COMNAVAIRSYSCOM, the inventory control point must ensure that corrections to all impacted logistics documents are initiated and carried through to completion.

4.3.7.7 For additional information concerning policies, procedures, and responsibilities applicable to SM&R codes, refer to OPNAVINST 5100.19 series, and NAVSUP P-719.

4.3.8 Configuration Management. Configuration management is vital to the acquisition process and is the key to making ILS decisions in each ILS element. The purpose of configuration management is to establish the discipline for managing the functional and physical characteristics of an item as well as its documentation throughout the entire acquisition and support process. There are no configuration management plans for the Joint Direct Attack Munition (JDAM). The JDAM contractor (Boeing) is the configuration manager for the JDAM/Laser JDAM weapon system, however government customers are involved in all Engineering Change Proposals (ECPs) and approve Class 1 (ECPs) engineering changes. Military-Standards (MIL-STDs) and Military-Specifications (MIL-SPECs) were not imposed on the contractor except for those relating to safety. For the AIM-9X SIDEWINDER, Raytheon Company, who has TSPR, is responsible for configuration management. However, government customers are involved in approving major Class 1 ECPs engineering changes.

SM&R CODE CHANGE REQUEST (See NAVSUPINST 4423.14C)

NAVAIR FORM 4423/1 (7/79) S/N 0102 LF 604 4230

CONTROL NO.
NAVAIR HQ
ASSIGNED

FROM	CODE	TELEPHONE NO.	DATE

TO: COMMANDER, NAVAL AIR SYSTEMS COMMAND

VIA (1)	(2)
CURRENT SM&R CODE	RECOMMENDED SM&R CODE
PART NUMBER (INCLUDE FSCM)	NATIONAL STOCK NO. (COG, FSC, NIIN, SMIC)
NOMENCLATURE	WORK UNIT CODE / UNIT COST

NEXT HIGHER ASSEMBLY (NOMENCLATURE)	SYSTEM APPLICATION	AIRCRAFT (OR OTHER END ITEM)

PUBLICATION NO. (TITLE, PAGE, FIGURE, INDEX, DATE)	MAINTENANCE PLAN NUMBER

REIMSDN JUSTIFICATION (ATTACH CONTINUATION SHEETS AS REQUIRED)

SIGNATURE AND TITLE	CODE	TELEPHONE NO.	DATE

FIRST ENDORSEMENT

FROM	TO

REMARKS

SIGNATURE AND TITLE	CODE	TELEPHONE NO.	DATE

SECOND ENDORSEMENT

FROM	TO

REMARKS

SIGNATURE AND TITLE	CODE	TELEPHONE NO.	DATE

NAVAIR HQ/DESIGNATED ACTIVITY DISPOSITION

NAVAIR HQ DESIGNATED ACTIVITY	CODE	TELEPHONE NO.	DATE

REMARKS

MAINTENANCE PLAN CHANGE REQUIRED	CURRENT USAGE RECOVERY APPLICABLE
☐ YES ☐ NO	☐ YES ☐ NO GRF____ RPF____ OTHER MRF____ ISR____

SIGNATURE AND TITLE	CODE

Figure 4-3-1. SM&R Code Change Request

4.3.9 Warranty Management.

4.3.9.1 The term "warranty" refers to a promise or affirmation given by a contractor to the Government regarding the nature, usefulness, or condition of the supplies or services furnished under the contract.

4.3.9.2 Section 2403 of Title 10 of the United States Code requires that DOD obtain warranties in contracts awarded after 1 January 1985 for the acquisition of weapons system equipment. Each contract must contain warranties covering design and manufacturing requirements, defects in materials and workmanship, and essential performance requirements. The warranties will provide ample time after delivery of the weapons system equipment for the Government to assess achievement of specification requirements and ensure that the equipment is free from defects in materials and workmanship.

4.3.9.3 NAVAIRINST 13070.7 series assigns responsibilities for the application of warranty provisions as part of contracts for the development, production, and modification of COMNAVAIRSYSCOM weapons systems. In accordance with NAVAIRINST 13070.7, COMNAVAIRSYSCOM will coordinate to develop warranties for airborne weapons.

4.3.9.4 JDAM has a unique 20-year extended maintenance/repair warranty for the guidance kits in container and 5-year warranty for out of the container. The Navy will track service life of the guidance kit by use of the CMBRE. A Built-In Test (BIT) will be run upon breakout (either before assembly or after) and before repackaging of the kit. JDAM program intends to ship the "defective" kit directly to the manufacturer who will "test" the unit and if a warranty failure is confirmed, either repair or ship a new kit back to the USN. Laser JDAM has a 20-year warranty for the sensor in container and 5-year warranty for out of the container. The Navy will track service life of the sensor by use of the CMBRE. A BIT will be run upon breakout and before repackaging of the sensor. JDAM program intends to ship the "defective" sensor directly to the manufacturer who will "test" the unit and if a warranty failure is confirmed, ship a new sensor back to the USN. Lot 1 through Lot 7 Production AIM-9X SIDEWINDER has a 10-year (120 month) from date-of-manufacture or 2000 hours on-aircraft warranty for the All-Up-Round (AUR), NATM-9X and CATM-9X measured by the missile Elapsed Time Indicator (ETI). The Navy will track on-aircraft hours by use of the CMBRE. The AIM-9X program intends to ship the "defective" missile(s) directly to the depot where it will "test" the unit and if the test confirms a warranty failure, depot will ship a replacement missile back to the user. The AIM-9X tactical missile will be managed by rotating assets between in service, and deep stored so the provisions of the 2000 hour, 10-year warranty can be maximized.

4.3.9.5 Naval Air Warfare Center Weapons Division (NAVAIRWARCENWPNDIV), is the maintenance engineering activity for most weapons system material. The assigned maintenance activity will coordinate with COMNAVAIRSYSCOM and take corrective action on problems detected as a result of the warranty program. This shall be in conjunction with the maintenance engineering assignment.

4.3.9.6 NAVAIRWARCENWPNDIV is the collection activity for missile material data. The activity will collect, store, and provide data upon request from COMNAVAIRSYSCOM in support of the airborne weapons warranty implementation program.

4.3.9.7 At the request of COMNAVAIRSYSCOM, weapons quality engineering centers provide engineering support in the resolution of problems that have possible warranty implications.

4.3.9.8 Organizational, Intermediate, and Depot level maintenance activities shall implement specific warranty process actions as directed in technical manuals, instructions, and COMNAVAIRSYSCOM warranty implementation plans.

4.3.10 Repair Part Procurement. COMNAVAIRSYSCOM is responsible for ensuring that procurement of spares and repair parts are based on future workload planning as well as historical demand. As part of this program, weapons configurations, which are known to require significant repair part replacement, are identified. The requirements are incorporated into COMNAVAIRSYSCOM material planning studies and workload planning documents.

4.3.11 Depot Level Maintenance.

4.3.11.1 The primary objective of depot maintenance is to sustain weapons systems and end items in a state of operational readiness consistent with the mission requirements of the operating or tactical units at the least total cost. Depot maintenance programs should be aligned at all times with the approved forces and their attendant operating requirements. Criteria for the establishment and retention of a depot maintenance capability must be based on supporting the workload demand created by the approved weapons or end item equipment inventory, as well as considering economic factors and mobilization and combat support planning requirements.

4.3.11.2 Programming for depot maintenance must treat weapons and equipment end items as systems rather than as commodity groupings of items. Continuous program updates are required to:

a. Ensure current status.

b. Facilitate consideration of alternative approaches for depot maintenance support.

c. Maintain balance between planned workload and approved maintenance resources.

d. Facilitate quantitative evaluation of changes in maintenance resources that may result from major force changes.

4.3.11.3 In order to accomplish these efforts, as well as to determine and distribute workloads in a timely manner, automated data systems should be used to the maximum extent possible.

4.3.11.4 As Navy weapons systems and equipment become more complex and modular, the support and readiness needs of the operating forces increase. These needs result in a corresponding increase in the number, value, and significance of repairable items. Repairable work comprises an important segment of the workload of all major Navy industrial activities. Component rework is a major contributor to the effectiveness of the organic depot maintenance support base for many weapons and aircraft. Also, in support of Government policy, a large portion of repairable rework is accomplished through commercial contracts and inter-service agreements.

4.3.12 Programming and Budgeting for Depot Level Repairables.

4.3.12.1 The programming and budgeting for support of D-level repairables continues during the life cycle of the weapons system or equipment. Some major Navy weapons systems are

designated for operational use for up to 30 years. Also, support of Foreign Military Sales (FMS) weapons systems usually occurs in parallel with their introduction into the Fleet, but can extend many years beyond Fleet phase-out of the systems.

4.3.12.2 The programming phase of the planning, programming, and budgeting system translates approved concepts and objectives contained in the Secretary of Defense's guidance and the Department of the Navy's (DONs) plans into time-phased resource requirements of manpower, funding, and material.

4.3.12.3 Requirements for D-level repairables procurement, repair requirements, and their supporting O&M,N appropriations are developed and reviewed within the programming process. The inventory manager is responsible for preparing the budget backup material, but the final budget submitted to Office of Secretary of Defense (OSD) and the administration of funds during budget execution are controlled by the systems commands.

4.3.13 Depot Repair.

4.3.13.1 The primary determinants of repair part or component availability are the funding levels approved for the procurement of piece parts and the repair of components.

4.3.13.2 Principal items, such as aircraft engines, weapons components, gun mounts, etc., are funded by the procurement appropriation Aviation Procurement, Navy (APN), Other Procurement, Navy (OPN), and Weapons Procurement, Navy (WPN). Secondary items managed by NAVSUP GLS AMMO are primarily funded by the Navy Stock Fund (NSF).

4.3.14 Depot Repair Funding.

4.3.14.1 The repair of Depot level repairable components is an important element of the overall management of repairables. Depot repair will, on the average, generate a Ready-For-Issue (RFI) replacement for one-third the cost of new items and at a significantly reduced leadtime.

4.3.14.2 The systems commands balance the availability of skilled personnel, industrial capacity, and funds to maximize the productivity of the depots. Depot level repairables serve as the principal source of replenishment stock.

4.3.14.3 Fleet Readiness Centers (FRCs) receive allocation of funds from the Commander, Naval Supply Systems Command (COMNAVSUPSYSCOM) for organic repair and to NAVSUP GLS AMMO for commercial and interservice repair.

4.3.14.4 The repair of most NAVSUP GLS AMMO managed repairables is financed by the NSF. COMNAVSUPSYSCOM issues quarterly allocations to NAVSUP GLS AMMO based upon approved apportionment from OSD. Since the NSF manager has authority to reprogram within the fund, he/she has the capability to trade off between procurement and repair of Depot level repairables.

4.3.15 Navy Stock Fund/Appropriation Purchase Account.

4.3.15.1 Navy Stock Fund (NSF) is a working capital fund. Its basic capital assets were provided from an appropriation made by Congress. NSF is a revolving fund which finances the purchase and maintenance of stocks of common supply items required for support and operation

of the Navy (expense type items). The NSF budget is based upon customer orders. The solvency of the fund is dependent on the receipt of a customer order and a subsequent sale of the material. Procurement computations for stock fund items are based primarily on previously recorded demands, new items, and engineering estimates.

4.3.15.2 NSF cash decreases when vendors are paid for material purchases which enter the system. Conversely, NSF cash increases when material is "sold" to Navy customers. In addition, items with high value inventories are intensely managed and are subjected to semiannual stratification procedures so as to eliminate replacing un-needed quantities of these items. The stratifications may also free up NSF funds for the procurement of new items or larger quantities of other items, or for covering losses to the fund. If after all of this, there is still a need for additional on-hand funds, COMNAVSUPSYSCOM can submit a substantiated request and the on-hand cash can also be increased by OSD or the Office of Management and Budget if it is available in one of the other OSD managed funds. If excess funds are not available for transfer from another OSD managed fund, they can only be obtained through the congressional appropriation process.

4.3.15.3 Since the primary source of RFI replacement D-level repairables carried in the NSF is repaired carcasses, the least costly and fastest method of providing RFI D-level repairables is to recover carcasses and expedite their repair and return to the supply system. For this reason, the following policy has been established: when a customer requisitions a RFI replacement from the NSF and indicates through the advice code that a carcass will be returned to the supply system, the customer will be charged a net price. However, if the advice code indicates that no carcass will be turned in, the requisitioner will be charged the full standard price.

4.3.15.4 Appropriations Purchase Account (APA) material consists of items procured with funds from designated appropriations, e.g., APN, and WPN. APA material, when required for a specific customer's job, is requisitioned from the supporting supply department or center and issued to the customer. When authorized by a funding document or by direction of the FRC or the inventory manager, APA government furnished material inventory items may be used without reimbursement. Authorized issues will be made on the basis of a material issue document coded by the supply department or center as APA Government Furnished Material (GFM). The material will be recorded and controlled in APA and will be reflected as a statistical charge to an authorized nonreimbursable customer.

4.3.15.5 Consumable Material Management Stock Funds. The NSF provides a means for managing, financing, controlling, and accounting for material, supplies, and equipment. It serves as a means to improve financial control of the consumption of material through budgeting, financing, and accounting for the use of such material.

4.3.15.6 The NSF finances the inventory point control procurement of most of the Navy's centrally managed consumable spares and repair parts and finances the reimbursement required when Defense Logistics Agency (DLA) and general services administration items are ordered and placed in Navy inventory. The NSF is a working capital or revolving fund. The capital to acquire the replacement stock is provided by reimbursement for all issues (sales) to the customer from the O&M,N funds. In this respect it differs from APA material that is issued without charge to the customer's O&M,N fund and is statistically charged to the customer only under specific circumstances.

4.3.15.7 Most material procured and stored in the Navy supply system and issued for operations and maintenance purposes is NSF authorized to be carried in the Navy Stock Account. Generally, this includes consumable material, relatively minor items of equipment, and parts used in the manufacture, assembly, or repair of end items, although it also includes fuel, clothing, and provisions.

4.3.16 Designated Overhaul Point.

4.3.16.1 The designated overhaul point, whether it involves a qualified contractor of a specific activity in the Navy or other military service, must be established by the estimated date of first repair induction and must contain the acquired depot repair capability and capacity. After a period of experience with the D-level repairable, any changes in the predicted demand must be updated and available repair capability and capacity must be adjusted, as deemed necessary.

4.3.16.2 Eight-Quarter Forecast. This forecast will be updated quarterly for Commander, Naval Sea Systems Command (COMNAVSEASYSCOM) and COMNAVAIRSYSCOM, and will include estimated Space and Warfare Systems Command and component repair requirements in quarterly increments by national stock number and by designated overhaul point. Inventory control points will use the 8-quarter forecast to substantiate funding requirements submitted to the repair fund sponsors. Systems commands will use this forecast to substantiate funding requirements submitted to the repair fund sponsors. Systems commands will also use this forecast to develop a resource plan to assure sufficient test equipment and piece part requirements are available at certified designated overhaul points when the repair requirements materialize.

4.3.16.3 Five-Year Forecasting. The 5-year forecast (or 20-quarter forecast as it is also named) is used to meet the requirements of the DOD programming system in providing detailed justification for Navy Component Repair Defense Program. The inventory control points will prepare this forecast quarterly in conjunction with the 8-quarter forecast and forward it to the applicable systems command and program manager. For D-level repairables, systems commands and operational managers will incorporate this forecast into the D-level maintenance program in the appropriate annex of the O&M,N Program Objective Memorandum submission. Systems commands will also use this forecast to estimate the size of the depot workload, justify adjustments to the depot utilization plan, identify parts and equipment requirements, establish workforce levels, and project material requirements and costs.

4.3.17 Depot Repair Scheduling.

4.3.17.1 It is the Navy policy that inventory control points and repair activities adopt the shortest repair requirements review cycle possible, with the ultimate objective of adopting a bi-weekly cycle. Studies have shown that a bi-weekly cycle is optimal because it offers the following advantages:

a. Increased sensitivity to changes in supply system requirements.

b. Opportunity to frequently update the repair priority (urgency of need).

c. Fewer interim requirements that need off-line, manual processing.

d. Better utilization of materials, funds, and available repair capacity.

4.3.17.2 It is also Navy policy to recompute and restratify repair requirements into current urgency-of-need levels during each review cycle, since this method is more sensitive to changes in Fleet requirements.

4.3.18 Repair of Weapons Aeronautical Components.

4.3.18.1 Repair requirements governing the scheduling and induction of repairable aeronautical components are managed under the programs described in the following paragraphs.

4.3.18.2 HI-BUNER. Items in this program are selected by COMNAVAIRSYSCOM and NAVSUP GLS AMMO based on a high historical volume of system demands and rework expenditures or known unit criticality. This program is intended to provide a level flow of high repair cost or high demand items through depot repair facilities, thereby achieving production line efficiencies. It also enhances the planning and use of repair parts support, training, and manpower.

4.3.18.3 Long-Term Warranty Program. The Long-Term Warranty Program was established for aircraft systems that are experiencing technical or design instability and increased repair costs. A selected number of the repairables of the system population are placed into the Reliability Improvement Warranty Program and operations data are recorded by manufacturer's serial number. The technical data flows to the FRC's Engineering Analysis Center, where engineers monitor installation and removal data, flying hour data, and failure data to develop reliability trends, maintenance history, and repair status. Based on the analysis of these data, minor design changes and modifications are performed on the units.

4.3.18.4 1R Cognizance Repair Program. The 1R Cognizance Repair Program is managed by NAVSUP GLS AMMO in coordination with the FRC. Normally, 1R cognizance Fleet level repairables and consumables are not required at the Depot level, but depot repair may be required in exceptional situations. NAVSUP GLS AMMO will perform scheduling via a message to the designated supply point and the FRC. The FRC will provide a line item repair cost estimate to the Supply Officer, who will then approve the repair cost or request NAVSUP GLS AMMO approval if the cost exceeds 100 percent of the procurement cost of the item. After approval, the Supply Officer will provide the carcass and NSF funds to the FRC to perform the repair.

4.3.18.5 Government Furnished Equipment (GFE) Repair Program. The GFE repair program is funded by COMNAVAIRSYSCOM (procurement appropriation) and managed by the FRC. This program supports the Depot level repairables that the Navy provides to equipment contractors for installation in new production equipment. Repair requirements will be submitted to the FRC by the Defense Contract Management Agency at the contractor's plant. FRC will authorize the repair of COMNAVAIRSYSCOM managed items. NAVSUP GLS AMMO will authorize the items that it manages.

4.3.18.6 FMS and Interservice Repair Programs. Each FMS case and Depot maintenance interservice agreement will constitute a separate, specific agreement made with the foreign government or other service. It is separately funded and assumes the same status as an individual contract.

4.3.19 Inventory Managers. Whether for repairable or consumable items, inventory managers have the same goal: to have it when it is needed by Navy customers.

4.3.19.1 Inventory managers are responsible for inventory management of each item of supply. Inventory managers include NAVSUP GLS AMMO and inventory control points. These inventory managers participate in provisioning new weapons systems, purchase spares and repair parts, compute and transmit repair requirements to designated overhaul points, and manage the commercial and interservice repair of components.

4.3.19.2 The inventory control points perform their mission using centralized computer systems which are connected via terminals to supply support and maintenance facilities. This communication network allows the daily processing of repairable transactions. In this way, NAVSUP GLS AMMO and other inventory managers can manage their inventories or repairables in the wholesale supply system. The Ordnance Information System (OIS) is used by inventory control points for management of ammunition items.

4.3.20 Stockage Policy. DOD policy states that support activities will provide maximum material support for approved forces under an inventory stockage concept that minimizes supply response time. Stockage for each material category will be provided by achieving a balance between required supply performance and economy consistent with peacetime operations and war readiness considerations. One aspect of this concept divides all DOD material into the following two levels of supply: wholesale and retail.

a. The wholesale level of supply consists of asset inventories (regardless of their funding source) over which an inventory control point normally exercises unrestricted control to meet worldwide inventory management responsibilities. At the wholesale level, stockage decisions will take into account both the actual demand and the essentiality of the stockage to a selected weapons system.

b. The retail level of supply includes supplies and materials (regardless of their funding source) held below the wholesale level. Each retail inventory is justified on the basis of its specific support mission. DOD components will develop criteria that promote minimal retail stockage. Stockage of items on other than a demand basis will be minimized.

4.3.21 Navy Inventory Levels. The Navy material support mission is accomplished at three levels of inventory. The first level is the consumer level of supply, consisting of materials carried by the individual activities. The second or I-level of supply is the material stocked onboard certain ships of the combat logistics force and at designated shore activities. There is no combat logistics force echelon of resupply for aviation-peculiar materials. The third level of supply is the wholesale level. Those materials used for resupplying the operating forces are stored at supply centers and depots, Naval Weapons Stations, shipyards, and air stations.

4.3.22 Allowance Lists.

4.3.22.1 Whatever their titles, the basic purpose of all allowance and load lists is to define the materials required (e.g., repair parts, repairables, operating space items, special tools, and consumables) for that echelon of supply to achieve an authorized standard of logistic readiness. The CNO has authority for coordinating the development of shipboard allowance lists. The CNO

has also been assigned responsibility for ensuring that defined allowances are funded and that they are substantially complete and onboard Navy ships prior to their initial deployment. The systems commands have been directed to develop, issue, and implement supporting policies, methods, and procedures to ensure compliance with the CNOs policies.

4.3.22.2 Coordinated Shipboard Allowance List. The Coordinated Shipboard Allowance List (COSAL) depicts authorized onboard D-level repairables, field level repairables, and consumables to support shipboard equipment and components, and is printed and distributed by NAVSUP GLS AMMO. For new construction, several (up to eight) increments are issued; at the end of overhaul minus 5 months, indices are issued.

4.3.22.3 Aviation Consolidated Allowance List. An Aviation Consolidated Allowance List is an allowance list for CVNs, LHAs, and Marine Aviation Logistics Squadrons which includes a range and depth of items required to support a specified deckload of aircraft for a specified endurance period, taking into account the available organic repair capability. The Aviation Consolidated Allowance List is printed and distributed by NAVSUP GLS AMMO. It constitutes the level of supply applicable to aeronautical materials for support of aircraft afloat and ashore.

4.3.22.4 Coordinated Shore Based Allowance List (COSBAL). The COSBAL is an allowance list tailored to suit the material support requirements of an individual shore activity or group of activities. The COSBAL, which is a compilation of Allowance Parts Lists, is normally prepared by the NAVSUP GLS AMMO when:

a. The shore activity has a critical mission.

b. The activity has a special operating requirement and is located far from a supply source.

c. Initial outfitting is required for a newly established activity.

d. An activity's mission (and, therefore, its equipment configuration) undergoes a major revision, making a re-outfitting or major stock adjustment necessary.

e. COSBALs are provided to designated shore activities every 3-years.

4.3.22.5 Fleet Issue Load List. The Fleet issue load list is derived from the Fleet issue requirements list, which identifies the predicted material requirements for the intermediate level of forward deployed Fleet forces over a 90-day period. The Fleet issue load list is positioned in combat stores ships (T-AFS) and resupply point at the Naval Supply Center, Norfolk, VA.

4.3.23 Fixed Allowances for Depot and Field Level Repairables.

4.3.23.1 Fixed allowances are established in accordance with OPNAVINST 4441.12 series to improve the management of authorized stock levels for Depot and Field level repairable items. The field allowance concept is designed to guarantee an equitable distribution of repairable assets and, through the strict discipline employed, ensure that adequate supplies are maintained by the operating forces.

4.3.23.2 A fixed allowance will be established by the program support inventory control point and negotiated with the Fleet or TYCOM and retail inventory stocking activity, as appropriate, for each repairable item or family authorized for stockage at each operating site. The fixed

allowance will identify both the range and depth authorized and will be based on factors such as failure rate, experienced demand, turn around time, mission essentiality, Maintenance and Material Management (AV-3M) data, and other data necessary to ensure that operational commitments will be met. Fixed allowance is regarded as the maximum authorized stock level. Retention of Depot and Field level repairables above the fixed allowance is not authorized. Necessary controls and procedures will be exercised by Fleet Commanders (FLTCOMs) or TYCOMs to ensure that the fixed allowance is not exceeded.

4.3.23.3 Activities not having established allowances or load lists, and having a need to stock repairables will submit requests to the cognizant inventory control point to approve an allowance of required repairables. The requests are subjected to FLTCOM or TYCOM approval.

4.3.24 Asset Reporting Requirements.

4.3.24.1 Historically, lack of visibility of the total inventory has been one of the greatest obstacles to cost effective management of D-level repairables. Fortunately, the problems with asset reporting which cause the lack of visibility are being overcome with procedural improvements, improved communication capabilities, and the computerization of operations at the inventory control point, designated overhaul points, designated supporting point, and customer levels. The improvements are making it possible for the inventory control points to gain broader views of both the wholesale and retail data bases and to disseminate data in a timely manner to the diverse organizations responsible for Fleet support.

4.3.24.2 Designated Support Point Reports. The Military Standard Transaction Reporting and Accounting Procedures (MILSTRAP) provides visibility of repairable assets in the wholesale distribution system. Reporting is generally accomplished by means of daily transaction item reports submitted by designated supporting points, which provide changes in item stock status. In addition to reporting supply effectiveness, the inventory control points monitor designated supporting point performance and the average time it takes the activity to ship repairables to other designated supporting points. The time is measured from the date of the requisition or redistribution order until the date of the receipted transaction item report. Designated supporting point averages are compared with the system average. The inventory control point initiates corrective action when a designated supporting point's performance is significantly longer than the system average.

4.3.24.3 Inventory Control Point. (ICP) Reporting. The ICPs mission is to produce reports based on transaction item reporting responses from commercial and organic designated overhaul points, designated supporting points, and customers. The reports are reviewed and action is taken within assigned areas of responsibility to correct conditions contributing to reduced repairables management effectiveness.

4.3.24.4 Commercial Designated Overhaul Points. The effective management of commercial repair efforts depends on monitoring repairables while they are at contractor facilities and, therefore, out of the Navy's custody. An automated contractor reporting system records timely and accurate information on Navy assets shipped to contractor plants for repair, costs along with use of government furnished material, and survey data. In addition, it measures the various increments of the commercial repair cycle and monitors and tracks the repairable from the time it is received until it is returned to a Navy activity in a RFI state.

4.3.24.5 Repair Turnaround Time. Through DOD 4100.39M, the DOD has issued the segments which comprise the repair cycle time along with their generic definitions to all defense services. The segments include retrograde, administrative, and depot maintenance times. Although retrograde time is considered part of the total repair cycle time by DOD, it is not included as part of Navy calculated turnaround time because the inventory control points do not have total visibility of the assets in that segment of the pipeline.

4.3.25 Depot Level Repairable Movement and Reporting Procedures.

4.3.25.1 The turn-in of Non Ready-For-Issue (NRFI) D-level repairables is mandatory if repair is beyond the capability of O-level and I-level maintenance activities. D-level repairables are identified by material control codes E, G, H, Q, and X, and are listed in the Master Repairable Item List (MRIL). Because of the "full accountability" (or "one-for-one exchange") requirement for D-level repairable materials, comprehensive retrograde management controls have been established. Expeditious turn-in is required to reduce retrograde "pipeline" inventory requirements.

4.3.25.2 All activities will use MILSTRIP/MILSTRAP procedures to prepare and submit requisitions in accordance with current TYCOM and ICP instructions for D-level repairable movement.

4.3.25.3 Retrograde control files are created based on requisitions and issue transactions that contain advice codes indicating unserviceable repairables are being turned in. Other advice codes identify cases in which turning in an unserviceable item does not apply. Activity performance is monitored to guard against the improper use of advice codes in requisitions.

4.3.25.4 At the local level, procedures for the effective control of departmental turn-ins are prescribed by COMNAVSUPSYSCOM to ensure that replaced D-level repairables which cannot be repaired locally are either expeditiously returned to the supply system in accordance with MRIL instructions or are certified to be missing or destroyed.

4.3.25.5 Specialized support procedures apply when commercial activities supply interim support materials for new systems or components before the supply system can assume this responsibility. In essence, the repairable items are returned to and shipped from commercial rework facilities. However, visibility is maintained over the assets by the ICP.

4.3.25.6 Issue and Material Movement Priorities. The DOD Uniform Material Movement and Issue Priority System (UMMIPS) will be used to ensure that material issue and movement requirements are processed in accordance with the military importance of the requiring activity, the urgency of need, and specific material management considerations. The UMMIPS, a Force Activity Designator (FAD) which describes a unit's status (combat, combat ready, etc.), is combined with the Urgency of Need Designator, which categorizes the requirement by criteria (immediate, routine, etc.) to determine the priority designator for each unit. See OPNAVINST 4614.1 series for additional information on UMMIPS.

4.3.25.7 Turn-In Procedures. To expedite the return of non ammunition, NRFI D-level repairables through the supply system, the Advanced Traceability and Control (ATAC) program was developed. ATAC provides for the return of all NRFI D-level repairables, with certain exceptions, to a centralized D-level repairable processing location on the East or West coast. (NAVSUPINST 4423.29 provides a detailed exception list). The locations are called hubs. The hubs

provide full technical screening of receipt, packaging and preservation, transaction item reporting, and consolidated shipping to the appropriate designated supporting point or designated overhaul point. The three geographic hub sites and their areas of support are listed below:

a. Fleet and Industrial Supply Center (FISC) Norfolk. All Continental United States (CONUS) activities east of the Mississippi River and on the Gulf Coast (except for Marine Corps activities serviced by Marine Corps Air Station (MCAS), Cherry Point), and all Outside Continental United States (OCONUS) activities and afloat forces including the Mediterranean.

b. FISC San Diego. All CONUS activities west of the Mississippi River and all Pacific Ocean OCONUS and Afloat forces including the Philippines and the Indian Ocean.

c. MCAS Cherry Point. All Marine Corps activities which are provided geographic support by MCAS Cherry Point.

4.3.25.7.1 To further assist the Fleet in returning unserviceable D-level repairables to the geographic hubs, transportation collection points, called nodes, have been established at Naval Air Station Sigonella, Sicily.

4.3.25.7.2 The ATAC retrograde program provides the Fleet user with simple instructions for addressing retrograde and transaction reporting for carcass tracking purposes on all material from any user to any destination. For those activities which have an on-site transportation agent, daily pickups of D-level repairables at the end users' location are made by the agent and shipped to a geographic hub.

4.3.25.7.3 One of the major benefits to the end user is a simplified MRIL. That is achieved through the fact that the only shipping address for D-level repairables would be the geographic hub that services the region. The assets will then be either shipped to the designated overhaul point or designated supporting point for repair or stowed if the hub represents the designated supporting point.

4.3.26 Master Repairable Item List.

4.3.26.1 The MRIL is a catalog of Navy-managed repairable items, including D-level repairables and field level repairables.

4.3.26.2 The MRIL simplifies the identification and movement of repairables to be processed for reissue. The proper use of the MRIL by operating activities will result in improved material availability and dollar savings through reduced inventory investments.

4.3.26.3 The primary purpose of the MRIL is to provide the data required for disposition of NRFI repairables, and:

a. Items to be repaired at the Organizational and Intermediate levels.

b. Items to be returned to D-level repair if beyond the capability of O-level and I-level maintenance and repair.

c. Identification of designated supporting points or designated overhaul points, Navy interservice, or commercial activities.

4.3.26.4 For ordnance material (2E, 2T, 4E, 4T, 6T, 8E, 8U, and 8T COGs), a separate ordnance MRIL provides disposition and special handling instructions. The ordnance MRIL is updated monthly and published by the NAVSUP GLS AMMO and available on the following website: https://zinc.ois.disa.mil.

4.3.26.5 For ordnance items not reflected in the ordnance MRIL, request disposition or special handling instructions from the inventory manager at the NAVSUP GLS AMMO. The NAVSUP-SYSCOM website: https://zinc.ois.disa.mil provides guidance to identify the commodities inventory manager.

4.3.27 Cannibalization.

4.3.27.1 Cannibalization is a maintenance option that is considered a drastic measure to only be utilized as a last resort. The need to cannibalize highlights a non-stock posture in the supply system. This non-stock posture in supply system can be at any higher maintenance echelon of any lower indenture spare or repair part of the end item being cannibalized, but still usually a failure either of procurement/replenishment or Repair of Repairables (ROR). Cannibalization, at a minimum, doubles the total man-hours required to perform the repair action than if the cannibalized item was available from supply system. It is also an empirical fact of reliability/maintainability that cannibalization causes additional failures due to at least doubling the number of removal/replacements, including attaching hardware that are one-time use limited cycle items (e.g. gaskets). However, regardless of the above problems associated with cannibalization, it is still sometimes the best solution (option) to the non-stock posture in the supply system when absolutely necessary to meet specific operational commitments.

NOTE

Salvage of condemned or declared excess items is not considered cannibalization (see paragraph 4.3.27.2h)

4.3.27.2 If during the maintenance or check-out of an item, the required spares and/or repair parts are not available in time to meet workload schedules in support of specific operational commitments, limited cannibalization of like items awaiting maintenance will be permitted upon authorized written approval. Since cannibalization is a last resort to meet operational commitments, permission to cannibalize may be sought only under the following conditions:

a. There will be no cannibalization between FMS assets, other military services (e.g. Air Force, Army, Coast Guard, etc) assets and/or Navy/Marine Corps assets without prior written agreement of the Assistant Program Manager, Logistics (APML).

b. There will be no cannibalization below the authorized level of maintenance of the activity performing the cannibalization without prior written approval of the APML.

c. Required spares and/or repair parts are not available through the normal supply channels.

d. A valid MILSTRIP requisition has been submitted to the supply agency responsible for furnishing the spares and/or repair parts; and the notification has been received from that agency that the required spares and/or repair parts will not be received in adequate quantity or time to meet workload schedule in support of specific operational commitments; however, said valid MILSTRIP requisition will remain in force for replenishment of the cannibalized item(s).

e. The number of spares and/or repair parts obtained by cannibalization will only be that quantity required to satisfy specific operational commitments not covered in time by the supply system as specified in subparagraphs 4.3.28.2c and d.

f. The end item inventory manager has not designated the item (to be cannibalized) for another activity or purpose (e.g. QDR Exhibit, etc.)

g. Applicable maintenance data will be recorded on the end item(s) and related spares and/or repair parts cannibalized in accordance with applicable Maintenance Data Collection System (MDCS) procedures, cannibalization request, and maintenance activities Quarterly Cannibalization Summary.

h. The cannibalization procedures covered in this paragraph do not apply to items which have been declared excess or beyond economical repair, and in accordance with applicable Quality Assurance (QA) procedures, are salvaged for usable spare and repair parts; however, usage MILSTRIP regulations shall be supplied to the cognizant supply agency to provide usage data for all spare and repair parts salvage from a condemned or excess unit.

i. For items under warranty, or exhibit for a Deficiency Report (DR), care shall be exercised in cannibalization so as not to invalidate the warranty or the DR exhibit, unless required by specific operational necessity.

4.3.27.3 When cannibalization is required to meet workload schedule in support of specific operational commitments, the maintenance personnel requesting authority to cannibalize, shall submit a written request, validated by operations/maintenance Planning Officer, Supply Officer, and the Ammunition Distribution and Control Officer, (AD&C) to the Ordnance Officer (or equivalent) for approval (see Figure 4-3-2, Sample Cannibalization Request). At a minimum the local Cannibalization Request shall contain the following:

a. Activity.

b. Date of requested and required due date.

c. Weapon system.

d. End item identification (including nomenclature, Part Number (P/N), Naval Ammunition Logistics Code (NALC*), Cognizance (COG*), National Item Identification Number (NIIN*), Serial Number (S/N) and Condition Code) for both end items being cannibalized from and for (* If applicable).

e. Spare and/or repair parts identification (including nomenclature, P/N, NALC*, NIIN*, S/N or quantity of non-S/N items, condition/purpose codes; and complete MILSTRIP requisition numbers, status, and estimated due dates) for the end item being cannibalized, as well as the end item requiring the cannibalized part.

f. Warranty/DR Exhibit Impact.

g. Operational Impact (if cannibalization is not performed).

h. Validations; Signature and Codes for Supply and/or AD&C, and Operations/Planning.

i. Approval; Signature and Code of Approving Official.

```
                                                        DATE: (DD-MM-YY)

SUBJ:    CANNIBALIZATION REQUEST FOR (WEAPON SYSTEM)
SENDER:  PERSON/ACTIVITY
TO:      ORDNANCE OFFICER (OR EQUIVALENT)
CC:      OPS/MAINTENANCE PLANNING OFFICER
         SUPPLY OFFICER
         AD&C OFFICER
         NAVAIRWARFARECENWPNDIV/NAVAIRSYSCOM LOCAL WORKLOAD
         REPRESENTATIVE

1.    REQUIRED DUE DATE             (DD-MM-YY)

2.    END ITEM TO BE CANNIBALIZED:

                                        FROM            FOR
      A. NOMENCLATURE
      B. NSN: (COG/CLASS/NIIN/NALC*)
      C. PART NUMBER
      D. SERIAL NUMBER
      E. CONDITION/PURPOSE CODE

3.    SPARE OR REPAIR PART TO BE CANNIBALIZED:

                                        FROM            FOR

      A. NOMENCLATURE
      B. NSN: (COG/CLASS/NIIN/NALC*)
      C. PART NUMBER
      D. SERIAL NUMBER (OR QUANTITY OF NON-SERIALIZED PARTS)
      E. CONDITION/PURPOSE CODE
      F. MILSTRIP REQUISITION NUMBER & STATUS (INCLUDES ESTIMATED DUE
         IN IF NOT CANCELED BY ICP)

4.    OPERATIONAL IMPACT:

5.    WARRANTY: AND/OR DR IMPACT

6.    VALIDATION: (SIGNATURE, NAME, CODE AND DATE)
      A. OPS/PLANNING
      B. SUPPLY*
      C. AD&C*

7.    APPROVAL: (SIGNATURE, NAME, CODE AND DATE)

      (* IF APPLICABLE)
```

Figure 4-3-2. Sample Cannibalization Request

4.3.27.4 If an item from which spare and/or repair parts have been cannibalized, is transferred by the cannibalizing maintenance activity to another maintenance activity, the following requirements apply:

a. The failed item shall be reassembled and transferred intact, and accompanied by replacement MILSTRIP requisitions, (i.e., generated and funded by the cannibalizing maintenance activity by submitting a document modifier to the original MILSTRIP requisition(s) modifying the supplementary address and changing the signal code to "J") for the missing requisitions for all installed/reassembled failed cannibalized and/or repair parts.

b. The exact failure must be noted on the material condition tag/label and on the accompanying maintenance documentation, which shall include a copy of all MILSTRIP requisitions.

4.3.27.5 Since cannibalization is normally a drastic measure and highlights a non-stock posture in the supply system, maintenance activities are required to submit a Quarterly Cannibalization Summary of all approved Cannibalization Request, submitted under paragraph 4.3.27 to the FST DAPML with a copy to the APML, Workload Managers, Inventory Managers, and PSICP Program Managers (PMs). The maintenance activities cannibalization summary may be submitted via e-mail (see Figure 4-3-3, Sample Cannibalization Summary) for those activities with access and by letter for those activities that do not have electronic mail access. At a minimum the Cannibalization Summary shall contain the following:

a. Activity: (Maintenance Activity Providing Cannibalization Summary).

b. Time Period: (Quarter and Fiscal Year Summary covers).

c. Weapons System Nomenclature: Weapon System Item(s).

d. NSN: (including COG Code, Stock Class, NIIN, and (NALC/DODIC if applicable) of spare or repair part cannibalized).

e. Part Number: (Part number of spare or repair part cannibalized).

f. Nomenclature: (Nomenclature of spare or repair part cannibalized).

g. Quantity: (Quantity of each spare part or repair part cannibalized during the time period of cannibalized summary).

h. MILSTRIP Requisition Number: (Complete MILSTRIP requisition number(s) for quantity of each spare or repair part cannibalized during the reporting period).

i. Remarks: (Include any pertinent data; e.g. cannibalized end item/spares/repair parts that came from, or went to a Deficiency Report (DR) exhibit or were under warranty and the impact there of, non-supply driven cannibalization actions; cannibalized end items sent to another activity for repair, etc.).

NOTE

Maintenance activities may be requested to provide copies of approved Cannibalization Request(s) if APML requires additional backup data for cannibalization reviews on selected part numbers. APML will review Cannibalization Summary periodically.

DATE: (DD-MM-YY)

SUBJECT: CANNIBALIZATION SUMMARY: (QUARTERLY)
SENDER: PERSON/ACTIVITY
TO: FST APML
CC: NAVAIR WORKLOAD COORDINATOR
NAWCWPNS PT. MUGU WORKLOAD MANAGER
NAVAIR INVENTORY MANAGER
NAVAIR SUPPLY SUPPORT MANAGER

1. ACTIVITY & TIME PERIOD OF SUMMARY

2. CANNIBALIZED ITEMS:

WEAPON SYSTEM NOMEN-CLATURE	NSN COG/CLASS/ NIIN/NALC*	PART NUMBER	SPARE OR REPAIR PART NOMEN-CLATURE	QUAN-TITY	MILSTRIP REQUISI-TION NUMBER	REMARKs

(* IF APPLICABLE)

Figure 4-3-3. Sample Cannibalization Summary

4.3.28 Supply Responsibilities.

4.3.28.1 Readiness is achieved by following sound management practices in supply support areas that may determine the degree of readiness.

4.3.28.2 Supply responsibilities include:

a. Proper management of asset inventories.

b. Proper financial management of repairables.

c. Accurate determination of allowances.

d. Timely retrograde of NRFI D-level repairable material.

e. Productive communication and coordination between maintenance and supply elements.

f. Full utilization of available resources to repair aeronautical material.

g. Initiation of requests to improve maintenance capability above that presently available, as authorized by the maintenance plan.

h. Timely investigation of material unsuitability prior to stock exhaustion.

i. Application of procedures, policies, regulations, and disciplines established for support of the operating forces.

j. Adequate material planning and technical research by supply and maintenance functions.

k. Development and maintenance of a hazardous material authorized use list and ensuring that only authorized materials are acquired.

l. Implementation of procedures to control, track, and reduce the variety and quantities of hazardous materials in use, in storage, or disposed of as hazardous waste.

m. Development and implementation of an active hazardous/consumable material shelf life extension program based on the requirements in FED-STD-793A (Depot Storage Standards).

4.3.28.3 Supply Department functional responsibilities include:

a. Maintaining operating support inventories and fixed allowances for support of assigned operating forces.

b. Issuing, receiving, storing, and controlling all material assets carried in local stocks.

c. Recording customer demand, replenishing stock, adjusting allowances in response to demand patterns, and maintaining all associated records.

d. Performing technical research to convert manufacturer's part numbers to a national stock number and determining family group application. Also, reviewing the assigned SM&R code for non-stock numbered material to determine proper procurement source, such as local purchaser, intermediate and D-level repair, or manufacturer. Repeated requests for I-level and D-level non-stock numbered items form the basis for a request to review SM&R code assignment.

e. Preparing the MILSTRIP requisition (or automated input) from the customer request.

f. Effecting complete on and off station material requisition processing.

g. Providing on station pickup and delivery of all material.

h. Providing daily automated listings with complete supply status for all NMCS, and PMCS, and anticipated NMCS, to both the Organizational and Intermediate levels. Listing shall be in sufficient quantity to ensure adequate distribution. Data will be sequenced to expedite the daily validation process. Listings shall contain the following information as a minimum: document number, National Stock Number (NSN), including COG symbol, material condition code, special material identification code, unit of issue and quantity, project and priority, nomenclature, status and routing identifier code of the activity submitting the status, Job Control Number (JCN), Work Unit Code (WUC), and originator code of the requisitioner.

i. Providing awaiting parts automated status listings to the I-level maintenance activity weekly. The listing shall contain the following information as a minimum: requisition number, NSN, unit of issue and quantity, originator code of requisitioner, project and priority, JCN, nomenclature, WUC, workcenter, status and routing identifier code of the activity submitting the status report.

j. Providing work stoppage automated status listings to organizational units weekly.

k. Validating NMCS and PMCS requirements daily and awaiting parts requirements at least weekly.

l. Maintaining a technical library for supply purposes containing supply and maintenance publications and directives, standard contractor and vendor drawings, military specifications, and modification directives.

m. Establishing, maintaining, and replenishing pre-expended bin items.

n. Continuously reviewing material allowances and request adjustments as required.

o. Ensuring that supply personnel are familiar with the local maintenance organization and its directives.

4.3.29 Navy Supply System.

4.3.29.1 The major responsibility of the Navy supply system is to provide material in support of operations and maintenance. Every effort will be made to have material located when and where it is needed. The intent is to make the relationship between the supplier and the user as simple and uncomplicated as possible within the boundaries of logistic directives published by higher authority. Navy stock is generally replenished on a system basis as a direct result of recorded usage and demand data, or on a program basis from pre-calculated usage. All Naval elements, regardless of size and location, have an assigned activity to which they can submit requests for material. In the case of maintenance activities, this request starts at the Organizational, Intermediate, and Depot levels of maintenance and flows to a designated point in the supply system. The UMMIPS assigns a FAD to all activities in the Navy establishment for determining priorities for material support. OPNAVINST 4614.1 series contains instructions for using the material priority system and assigning FADs. These instructions are implemented by

FLTCOM and TYCOM instructions. The FAD is correlated with urgency of need to determine the priority assigned to requisitions. The priority assigned to material requisitions, not the project code, determines the speed with which a requisition must be filled by the supply system. UMMIPS abuse detracts from supply system responsiveness.

4.3.29.2 The Navy supply system is part of the Defense supply system. It procures, maintains, and distributes equipment, repair parts, and consumable inventory (except ordnance ammunition) to Navy consumers. The basic responsibility for providing support to meet user needs is the function of inventory control points, who in cooperation with the cognizant systems command and the users or customers, determine the individual supply support measures of Navy shore installations, determine the range and depth of items to be carried at these specific installations, and position the inventories. The complex of installations identified as designated support points is where the physical work of receiving, storing, and issuing of items takes place.

4.3.29.3 The NAVSUP GLS AMMO is the primary inventory control point responsible for material support of weapons and their related equipment. The specific weapon materials concerned are weapons and weapons support equipment repairables, piece parts, bombs, rockets, fuzes, aircraft gun ammunition, pyrotechnics, cartridges and cartridge actuated devices, and aircrew escape propulsion systems. As ICP for designated weapons material, NAVSUP GLS AMMO responsibilities include:

a. The procurement of material directly from industry or other government agencies.

b. The allocation of COMNAVAIRSYSCOM procured material to stock points.

c. The distribution of materials to fill replenishment stock requirements.

d. Referral of requisitions to stock points to meet end use requirements.

e. Initiation of disposal actions for materials that are in excess of system requirements.

f. Maintenance of weapon material spares and spare parts catalogs.

g. Determination of rework requirements of repairable weapon material secondary items.

h. Development, issuance, and updating of initial outfitting allowances applicable to weapons material.

i. Management of program support inventory control point activities for weapons programs.

j. Maintenance of OIS as outlined in NAVSUP P-724.

k. Development of the allowance parts list and COSBAL for weapons material.

4.3.29.4 NAVSUP GLS AMMO is the primary NAVSUP WSS responsible for material support of the Naval Aviation Maintenance Program (NAMP) with respect to technical aviation material. Technical aviation material consists of repair parts and spare parts for aircraft, power plants, avionics, electrical, accessory, and meteorological equipment (common and peculiar). For airborne weapons, it includes guns and launchers. NAVSUP WSS material mission is the program support of weapons systems, aeronautical equipment, and components under the design, engineering, and configuration control of COMNAVAIRSYSCOM. Certain supply items required to support COMNAVAIRSYSCOM aeronautical material programs may be under the management

cognizance of other inventory control points. Supply support responsibility for these items is accepted by appropriate inventory control points and program information is provided by NAVSUP GLS AMMO to enable supply support to be provided. NAVSUP GLS AMMO responsibilities for the items under their program support inventory control point cognizance include, but are not limited to:

a. Computation of aviation material requirements in both range and depth.

b. Budget development data for all assigned aviation material.

c. Procurement of material directly from commercial industry or via other government agencies.

d. Allocation of COMNAVAIRSYSCOM procured material to fill replenishment stock requirements and the referral of requisitions to stock points to meet user requirements.

e. Determination of system asset Depot level rework requirements of all repairable components to be processed by organic, interservice and commercial rework sources.

f. Development, issuance, and updating of allowance requirements register of allowance and load lists.

g. Conduct and coordination of provisioning conferences.

NOTE

The maintenance of item identification and cataloging data is the responsibility of the Defense Logistics Support Center, Battle Creek, Michigan.

4.3.30 Material Cognizance Assignment.

4.3.30.1 For supply and financial management purposes, Navy material items are grouped into basic logistics categories which may include all, or segments of, a number of classes of material. Cognizance symbols are two-digit numeric and alpha codes. The numeric code designates the stores account, Navy stock account, or Appropriation Purchase Account (APA) of the item. The alpha code is used to designate the cognizant inventory manager who exercises Navy-wide technical management responsibilities over specified categories of material. The 13-digit NSN is the standard means of identifying items in the Navy supply system. The Navy cognizance symbol usually precedes the NSN when used in Navy publications or documents.

4.3.30.2 COMNAVSUPSYSCOM is responsible for the assignment of material cognizance symbols and for the maintenance of accurate and current cognizance symbol material descriptions. Navy inventory managers are responsible for conducting an annual review of material descriptions for assigned cognizance symbols and recommending changes to COMNAVSUPSYSCOM. COMNAVSUPSYSCOM will notify cognizant systems commands, FLTCOMs (including reserves), and other activities of the transfer of cognizant items. That action is accomplished through issuing bulletins and notices, implementing instructions, or other media that initiate revisions to the Federal Supply Catalog (FSC), allowance and load lists, initial stock lists, technical manuals, and other related publications.

4.3.30.3 The following cognizance symbols are applicable to airborne weapons and are managed through use of the OIS, NAVSUP GLS AMMO, and DLA.

a. 2E cognizance material consists of conventional air ammunition and ordnance used on or launched from aircraft. These items are included in OIS under the inventory management of NAVSUP GLS AMMO, and are under the technical control of COMNAVAIRSYSCOM.

b. 4E cognizance material consists of air launched missile components and containers. Such items are included in OIS, are under the inventory management of NAVSUP GLS AMMO, and are under the technical control of COMNAVAIRSYSCOM.

c. 8E cognizance material consists of air launched missiles, components, and containers or cradles. Such items are included in OIS under the inventory management and technical control of COMNAVAIRSYSCOM.

d. 1H cognizance material includes consumable repair parts in support of air launched missiles. The items are managed in the inventory through the NAVSUP GLS AMMO uniform inventory control point system and are under the technical control of COMNAVAIRSYSCOM.

e. 7E cognizance material consists of repairable items in support of airborne weapons. The items are managed in the inventory through NAVSUP GLS AMMO uniform inventory control point system and are under the technical control of COMNAVAIRSYSCOM.

f. 9 cognizance material items consist of consumable repair parts and certain items under the inventory management of the DLA or other services.

NOTE

Cognizance codes 2E, 4E, and 8E are in the APA. Cognizance codes 1H, 7E, and 9 are in the Navy stock account.

4.3.31 Hazardous Material Control and Management Program.

4.3.31.1 Scope. This program is conducted in accordance with the objectives and guidance of OPNAVINST 5090.1 series. Materials specified for use during maintenance of airborne weapons and associated equipment, which are hazardous or potentially hazardous materials, must be minimized and controlled from the design and technical documentation phase, through acquisition, and throughout the life cycle of the weapon. The primary controlling document for airborne weapons and associated equipment is NAVAIR 01-1A-75 (Airborne Weapons and Associated Equipment, Consumable Material Applications and Hazardous Material Authorized Use List). The manual provides processes for cleaning and corrosion control and authorizes approved materials for use in these processes and all other processes that utilize consumable hazardous materials. The hazardous materials authorized in NAVAIR 01-1A-75 constitute the Authorized Use List for maintenance of airborne weapons and associated equipment.

4.3.31.2 Weapons System Development/Change. During the development of new weapons systems, or changes to existing systems, only materials in the Authorized Use List may be specified for use in maintenance. This control ensures that the least hazardous, technically acceptable, legal materials are specified and minimizes the variety of hazardous materials required in maintenance functions.

4.3.31.3 Legal Sanctions. Uniformed and non-uniformed Government employees who use, or specify the use of, hazardous materials that are not in compliance with environmental regulations can be held personally liable for criminal and civil sanctions. Using only the materials in the Authorized Use List will reduce this liability risk.

4.3.31.4 Material Deviations.

4.3.31.4.1 Temporary Deviations. There are occasions when an activity may need to use a hazardous material not authorized in the Authorized Use List due to supply or other problems. The Commanding Officer of a maintenance activity has the authority to grant temporary deviations from the Authorized Use List; however, he/she also assumes any risk involved. The technical manual Fleet Support Team (FST) can grant temporary deviations of up to 1 year and will assist the requesting activity in finding a suitable substitute. The deviation request can be informal via telephone, telefax, Naval message, email or any other correspondence. The deviation request should include: material to be substituted and the substitute material to be used, if known (including complete part number; military specification or Commercial Item Description (CID) number; nomenclature; and NSN.

4.3.31.4.2 Permanent Deviations. A permanent material deviation request will cause a change to NAVAIR 01-1A-75 and shall be submitted per OPNAV 4790/66, Technical Publications Deficiency Report (TPDR). At a minimum the request for a material to be added, deleted or changed should include: complete part number, military specification or CID number and NSN; written justification for the deviation that fully addresses the applicable application in NAVAIR 01-1A-75; a Material Safety Data Sheet for any new or changed material; and if the proposed new or changed material is not a material currently authorized in the Authorized Use List, a list of authorized materials considered for use with reasons and test results showing why their use was rejected.

4.3.31.4.3 Unacceptable Materials. In general, the following materials will not be approved for use: Ozone Depleting Substances (ODS) or materials containing ODS; materials not in compliance with environmental regulations; known and suspected carcinogens or materials containing them; or proprietary materials.

4.3.31.5 The following continuing actions are required to ensure compliance with environmental laws and regulations and to minimize the use of hazardous materials:

a. Review of all maintenance documentation to ensure all hazardous materials are in compliance with NAVAIR 01-1A-75.

b. Identification of authorized substitutes for ODS, carcinogens, environmentally non-compliant materials, and other materials not in compliance with NAVAIR 01-1A-75.

c. Removal from technical manuals of materials and processes that are redundant to those in NAVAIR 01-1A-75.

d. Review of ECPs, TDs, TPDRs, Interim Manual Change Releases, etc., to preclude the proliferation of hazardous materials for use in maintenance processes.

e. Review and update of supply documents (Allowance Parts Lists/Allowance Equipage Lists) to correlate with the latest weapons Hazardous Material Control and Management (HMCM) Program data.

f. Review of NAVAIR 01-1A-75 and submission of source data for updating NAVAIR 01-1A-75.

4.3.32 Supply Reference Publications.

4.3.32.1 The following is a listing of the general use manuals, publications, and directives which are used by aviation supply personnel to determine standard supply system management data relative to material identification, material requisitioning, and processing of repairable components.

4.3.32.2 Management List-Navy. It is tailored to Navy interest items and contains basic management data for each NSN, such as inventory manager identification, item nomenclature, unit of issue, unit price, security classification, material condition code, and deleted or superceded NSNs.

4.3.32.3 Master Cross Reference List. It is tailored to Navy interest items and contains part number, Commercial and Government Entity (CAGE) codes (formerly Federal Supply Code for Manufacturers (FSCM)), applicable NSN data, and nomenclature.

4.3.32.4 Cataloging Handbook H-4, which contains the name, address, and a 5-digit CAGE code (formerly FSCM) for each company which produces items used by the Federal government. The CAGE is used in conjunction with a part number, item number, symbol, or trade name to identify the specific manufacturer or an item.

4.3.32.5 Afloat Supply Procedures (NAVSUP P-485) establishes policies for the operation and management of afloat supply departments and activities operating under afloat procedures. Although it is designed primarily for non-automated ships, much of the information and policy apply to automated ship operations. The procedures contained in the manual are considered mandatory unless modified by applicable Fleet and TYCOM directives.

4.3.32.6 Operating Procedures Manual for MILSTRIP and MILSTRAP establishes policy and procedures relative to MILSTRIP and MILSTRAP. It covers procedures relative to supply system management, requisitioning ashore, inventory control, financial matters, material movement, and serves as a ready reference for personnel involved in preparation and processing of MILSTRIP documents.

4.3.32.7 Supply Afloat Packaging Procedures (NAVSUP P-484) provides guidance to supply activities Ashore and Afloat in accomplishment of basic packaging techniques which will adequately protect materials and retrograde shipments of repairable items.

4.3.32.8 Navy Stock List of Publications and Forms (NAVSUP P-2003) contains a listing of current publications and forms used throughout the Navy which have assigned stock numbers. Items are stocked at the Naval Aviation Supply Office and can be ordered using a MILSTRIP P-2002.

4.3.32.9 List of Items Requiring Special Handling (NAVSUP P-4105) identifies items by NSN which require special handling procedures. Categories of such items include those which are hazardous, deteriorative in nature (shelf life controlled), and security classified. P-4105 is distributed quarterly.

4.3.32.10 Individual Component Repair List (ICRL) is published by NAVSUP GLS AMMO, and provides aviation Intermediate maintenance activities with the ability to relate maintenance capability to individual repairables ordered for screening. ICRL, as an overall statement of Intermediate maintenance activity repair capability, is an integral extension of the maintenance program.

4.3.32.11 Consolidated Remain-in-Place List, identifying those immediate D-level repairables which are authorized to remain in place. The Consolidated Remain-in-Place List consists of three parts: NIIN sequence listing, P/N to NIIN listing, and a discrete listing for each type and model aircraft in NIIN sequence.

4.3.32.12 Introduction to Federal Supply Catalog and Related Publications (NAVSUP P-4000) contains descriptions of the format and contents of the List of Items Requiring Special Handling (NAVSUP P-4105), the MRIL, Afloat Shopping Guide (NAVSUP P-4400), and Navy item control number NSN (cross reference).

4.3.32.13 Financial Management of Resources, Operating Forces (NAVSO P-3006/P-3013) contains information related to and procedures for maintaining operating targets and define terms used in the resources management system pertaining to activities, ships, and squadrons.

4.3.32.14 Shipboard Uniform Automated Data Processing System (SUADPS) AV (207) Support Procedures provides detailed procedures for the operation of SUADPS for supply, accounting, and other business oriented applications. It is mandatory for all aircraft carriers and amphibious assault ships using SUADPS. It also applies to Marine Aviation Logistics Squadrons for aviation support and P-3 mobile maintenance support system activities. It is distributed to ships and activities using SUADPS procedures and may be obtained from the NAVSUP GLS AMMO.

4.3.33 List of Navy Aviation Publications Issued by Naval Operational Logistics Support Center.

4.3.33.1 Consolidated Notes for Selected Publications of the NAVSUP GLS AMMO contains descriptions of the format and contents of Section P-2300, Section P-2310, Consolidated Remain-in-Place List-01, Section P-2330, Sections C0030, NAC-10, ICRL-A, and ICRL-C.

a. Section P-2300, lists repairable assemblies under the cognizance of the NAVSUP GLS AMMO, COMNAVAIRSYSCOM, or Branch Aviation Supply Office. The P-2300 is published semiannually.

b. Section P-2310, serves as a master reference list for identifying and requisitioning parts of replacement significant items required to support repairable assemblies listed in section P-2300. The P-2310 is published semiannually.

c. Section P-2320 informs field activities of approved changes in recoverability (condemnation) levels of items which call for retention vice disposal.

d. Section P-2230, lists an aggregate of the interchangeability data shown in Section P-2300 and Section P-2310.

4.3.33.2 The NAVSUP GLS AMMO Bulletin contains technical information which is helpful in the inventory management of the aviation supply segment of the Navy supply system. It is furnished to all activities engaged in aviation supply and to any other activity which advises NALC of an appropriate need-to-know. It advises concerned personnel of new information on aviation supply procedures, changes to the NALC Navy stocklist, manual field supply problems, and other supply activities and aviation storekeepers.

CHAPTER 4.4

Maintenance Engineering Management

Table of Contents

Paragraph	Subject	Page
4.4.1	General	4-4-1
4.4.2	Cognizant Maintenance Engineering Activity Assignment	4-4-1
4.4.3	Tasking	4-4-2
4.4.4	Cognizant Maintenance Engineering Activity Functions	4-4-3
4.4.5	Fleet Weapons Support Team	4-4-4

CHAPTER 4.4

Maintenance Engineering Management

4.4.1 General.

4.4.1.1 Maintenance engineering is that activity of equipment maintenance which develops concepts, criteria, and technical requirements during the acquisition phase of the system or equipment life cycle. Maintenance engineering is applied and maintained during the operational phase to assure timely, adequate, and economic maintenance support of systems and equipment.

4.4.1.2 Included in maintenance engineering is the requirement for LSA and Level of Repair Analysis (LORA). From these analyses, both hardware design and procedural support constraints are specified and subsequently monitored. During the in-service phase, maintenance engineering establishes the requirements and implements actions to assure timely, effective, and economic logistics support of the operational equipment. During the in-service engineering phase, maintenance engineering tasks are designated as elements of integrated logistics support and are performed by cognizant maintenance engineering activity assignments.

4.4.2 Cognizant Maintenance Engineering Activity Assignment.

4.4.2.1 Technical Support Assignments to COMNAVAIRSYSCOM Field Activities, Naval Warfare Systems Command (NAVWARSYSCOM) Research and Development Centers, provide procedural requirements and related information for implementing the COMNAVAIRSYSCOM management policy regarding the utilization of COMNAVAIRSYSCOM field activities, other field activities, and relevant NAVWARSYSCOM and Research and Development Centers for technical support of COMNAVAIRSYSCOMs programs and functions. Technical Support Assignments to COMNAVAIRSYSCOM Field Activities and NAVWARSYSCOM Research and Development Centers, also publishes a listing of field activity and research and development center technical support responsibility assignments.

4.4.2.2 NAVAIRINST 5400.14 series, Cognizant Field Activity (CFA) Program, implements management policy regarding utilization of COMNAVAIRSYSCOMs field activities by providing the policies and procedures governing assignment of responsibility and delegation of authority to field activities for management and performance of in-service engineering functions for service equipment. A COMNAVAIRSYSCOM notice is issued annually to publish assignments of in-service engineering cognizance for aircraft, guided weapons, aeronautical systems, and related ground support equipment. The list is a directory which reflects CFA assignments.

4.4.2.3 Transfer of the functions to field activities outside the direct jurisdiction of COMNAVAIRSYSCOM and administration of the budget requires a means of achieving tasking and funding to meet the rules associated with financial guidelines. That is accomplished by the issuance of Team Work Plans (TWPs) to individual field activities to manage those resources dedicated to weapons logistic support with other ongoing activities. That provides the required synergistic effect for the total life cycle of the system assigned. Specific and detailed assign-

ments within the scope of the TWPs are provided in Work Unit Assignments (WUA). Funding is then provided by the issuance of work requests (NAVCOMPT 2275).

4.4.2.4 As listed in Chapter 4.6, the CFA is responsible to COMNAVAIRSYSCOM for performing maintenance engineering tasks on the designated major product areas.

4.4.3 Tasking.

4.4.3.1 A team work plan is the principal COMNAVAIRSYSCOM document for assigning field activity tasks. NAVAIR Form 3930/1 provides the format for TWP and WUAs. Team work plans may reference applicable work unit plans or other planning documents for the assigned work which will be considered approved by virtue of their inclusion in an TWP. If adequate technical details are not described in the referenced planning documents, TWPs shall request that the field activity supply all necessary technical details to enable accomplishment of the work in accordance with COMNAVAIRSYSCOM requirements. In those instances where the effort involved covers a broad area and cannot be completely defined, the TWP will outline in general terms the technical area to be encompassed and may be further implemented by WUAs. For all work funded by categories 6.1 (Research) and 6.2 (Exploratory Development) of the Research, Development, Test, and Evaluation (RDT&E) appropriation, assignments shall be made only at the TWP level. WUAs shall not be issued for 6.1 nor 6.2 RDT&E funding. Although domestic and related FMS work may be included in the same TWP, separate WUAs will be required for FMS work.

4.4.3.2 A WUA is a detailed assignment to a field activity for performance of a specific task within the scope of a previously assigned TWP. WUAs are subordinate elements of TWPs and their format is the same as an TWP. Under extraordinary circumstances involving extreme urgency, a WUA may be assigned by message. In such cases definitive funding information shall be included. A message WUA shall be followed by assignment on a standard format and by funding documents within 20 working days.

4.4.3.3 Logistics and maintenance engineering work assigned to field activities by the COMNAVAIRSYSCOM will be made by a single combined TWP or WUA issued to each field activity for all O&M,N logistics element support tasks. When more than one O&M,N logistics or maintenance engineering program task is assigned to a field activity, the technical tasks, cost estimates, and required deliverables will be included as enclosures to the combined TWP or WUA. Consolidated cost estimates will be provided in the TWP or WUA in two tables: one for overall TWP or WUA costs by subhead, project unit code, and commodity, and the other for the program tasks by project unit code. Procurement and RDT&E WUAs are issued on an individual commodity basis (i.e., SPARROW, SIDEWINDER, etc.). COMNAVAIRSYSCOM TWPs and WUAs are issued on a fiscal year basis for O&M,N and RDT&E. WPN and OPN are issued on a calendar year basis.

4.4.3.4 Acceptance, Planning, and Reporting. The field activity receiving the TWP or WUA must forward a letter of acceptance within 10 calendar days of receipt. The letter may be submitted via the electronic mail network. Each field activity will also submit a program plan using the guidance obtained from COMNAVAIRSYSCOM. The program plan will provide the management plan of action for accomplishing the assigned tasking. A monthly expense report is required for each team work plan or WUA and technical deliverable requirements will be specified in the TWP or WUA.

4.4.4 Cognizant Maintenance Engineering Activity Functions. The following responsibilities will be carried out by each maintenance engineering organization as designated and tasked by COMNAVAIRSYSCOM:

a. Develop maintenance support concepts for weapons and equipment programmed for operational use by the DOD.

b. Provide support parameters, criteria, and quantitative maintenance experience data for use during the acquisition phase of weapons and equipment life cycles.

c. Develop, or participate in the contractor development, of time-phased maintenance support plans for the introduction of new weapons and equipment into operating inventories of the DOD. Update and administer these plans on a continuing basis to assure currency and a balanced maintenance support program.

d. Develop and update technical criteria which prescribes the scope, depth, and frequency of maintenance and inspection to be performed on weapons and equipment.

e. Prescribe the technical requirements for effecting engineering changes or modifications to operational weapons and equipment.

f. Determine the technical requirements for maintenance facilities, tooling, test and support equipment necessary to support weapons and equipment consistent with the design and operational needs.

g. Establish maintenance technical training criteria necessary to assure the required level of technical competency to maintain weapons and equipment in support of operational requirements.

h. Define tasks to be performed at the various levels of the maintenance organizational chain to assure effective and economical support of weapons and equipment.

i. Conduct required maintenance engineering feasibility studies incident to proposed changes to weapons and equipment in operating inventories of the DOD.

j. Provide engineering consulting services to all levels of maintenance and other operating activities.

k. Administer and assure implementation of the configuration status accounting program for operational weapons and equipment.

l. Establish maintenance production inspection criteria and procedures, including quality standards for maintenance of weapons and equipment.

m. Develop and prescribe test procedures and criteria for maintenance of weapons and equipment.

n. Develop proposed changes to weapons and equipment to: (1) correct service-revealed deficiencies, (2) improve effectiveness of logistic support, or (3) produce life cycle cost savings.

o. Establish or provide financial decisions on spares and repair part replacement factors and other technical decisions during the equipment provisioning process, including the designation of material with respect to SM&R code. (See NAVSUP P-719.)

p. Conduct continuing analysis of equipment performance data to determine areas of opportunity for improvement and conditions where actual performance is not consistent with programmed performance predictions.

q. Provide guidance and control over maintenance data collection and equipment identification coding systems to assure inter-service uniformity and quality of data collected.

r. Prescribe the technical criteria governing the reclamation, condition condemnation, and demilitarization of weapons and equipment.

s. Prescribe and issue technical instructions, including time compliance, for the accomplishment of modifications or changes to end items, weapons, and equipments, including their subsystems and components; maintain records on changes and modifications as a part of the configuration accounting program; on completion of modification or change kit installations, rescind the technical instruction and direct release of any remaining modification kits for reutilization purposes (i.e., breakdown for parts usage).

t. Develop and implement a maintenance HMCM Program for end items, weapons equipment, subsystems, and components to include a hazardous material ”Authorized Use List”; to minimize the total number of hazardous materials used for maintenance; and to eliminate or reduce the use of ozone depleting substances and materials that are not in compliance with environmental regulations. NAVAIR 01-1A-75 will serve as the ”control” document and be continually reviewed and updated to reflect the latest hazardous material reduction technology and environmental regulation changes.

u. Develop and implement a maintenance Consumable (Non-Hazardous) Material Consolidation Program for end items, weapons, equipment, subsystems and components to reduce the quantity of consumable materials required to be procured, stocked stored and used during maintenance. NAVAIR 01-1A-75 will serve as the ”control” document and will contain the list of consumable materials recommended for use.

4.4.5 Fleet Weapons Support Team. Fleet Weapons Support Team (FWST) provides on-site and on-call monitoring, analysis, trouble-shooting and direct feed back support for all COMNAVAIRSYSCOM Weapons Programs (PMAs). Provides on-site and on-call engineering, maintenance, logistical and training support for Fleet Operational Units, ashore and afloat, in support of all air-launched, air dropped weapons and their platform interface and Stores Management Systems (SMS), targets and remote piloted vehicles (UAV).

4.4.5.1 FWST Tasking and Requirements. The COMNAVAIRSYSCOM, TWP or WUA assigns and implements engineering and technical services for weapons and targets. The detailed requirements imposed by the tasking include the following:

a. Provide on-site and on-call instruction and training in the operation and maintenance of air launched missiles, bombs, ammunition, rockets, weapon to aircraft interface and SMS, associated launchers, and targets to Fleet operational units, commands and shore-based industrial activities.

b. Provide Weapons Assist Teams (WATs) to operating commands during scheduled training exercises to extend training potential and assess weapon performance as directed by TYCOMs.

c. Monitor all operational and maintenance evolutions to determine the frequency and cause of handling damage as well as other operational and maintenance problems and recommend corrective actions to responsible maintenance engineering personnel. In this regard, provide active and responsive participation in the Quality Deficiency Reporting (QDR) system.

d. Provide training curriculum for Naval weapons station personnel providing on-site training as required. Initiate development of personnel qualification and certification programs to assure required basic requisites for maintenance personnel across all skill requirements.

e. Participate in logistics reviews.

f. Provide technical assistance in support of missile sentencing inspections aboard returning ships to assign condition codes and prescribe maintenance actions required.

g. Provide ordnance training for deploying LHDs, LPDs, and LHAs.

h. Provide support to special teams for Forward Deploying Rapid Response Teams, Aviation Ordnance Readiness Reviews (AORR), Aviation Ordnance Safety Assessments (AOSA), site surveys, FMS support, weapons/equipment modifications and engineering investigations.

i. Develop and maintain training material used to support curriculum required.

j. Respond to specific requirements proposed and desire by COMNAVAIRSYSCOM and operational type commanders in discharging assignments cited above and to specific requirements and inquiries by maintenance engineering personnel.

k. Provide personnel at all levels of airborne weapons maintenance with training in hazardous materials control and management, as well as in the use of NAVAIR 01-1A-75.

4.4.5.2 The FWST is comprised of technical personnel designated as Navy Civilian Technical Specialists (NCTS) and Contractor Engineering Technical Services (CETS). These specialists are located at strategic locations around the world to support specific mission requirements assigned to the FLTCOMs. In order to support those mission requirements, the Fleet Type Commanders have established a minimum manning requirement of FWST specialist as follows:

NAS WHIDBEY ISLAND, WA	2	MCAS IWAKUNI, JA	2
NAS LEMOORE, CA	3	MCAS FUTENMA, OKINAWA	2
NAS FALLON, NV	2	NAS OCEANA, VA	3
NAS NORTH ISLAND, CA	2	NAS JACKSONVILLE, FL	2
NAB CORONADO, CA	1	NS MAYPORT, FL	1
MCAS MIRAMAR, CA	3	MCAS CHERRY PT, NC	2
MCAS CAMP PENDLETON, CA	2	MCAS NEW RIVER, NC	2
MCAS YUMA, AZ	2	MCAS BEAUFORT, SC	2
NAWMU-1, GUAM	1	NAS ATLANTA, GA	1
ANDERSON AFB, GUAM	1	NAS JRB FORT WORTH, TX	1
MCBH KANEOHE BAY, HI	1	NORFOLK, VA	1
NAF ATSUGI, JA	1		

The presence, knowledge, and experience of the on-site FWST specialist are considered by the Fleet Type Commanders to be critical to the continued success and readiness of Fleet operational forces. For specific information concerning locations and points of contacts of FWST personnel contact ”Commander, Naval Air Warfare Center Weapons Division, (Code 674000D), 1 Administration Circle, China Lake, CA. 93555-6100.

4.4.5.3 Requesting Procedure. FWST services can be requested by letter or Naval message through the requestor’s logistic chain of command for WAT support. The contents of the engineering technical services requirements in message format should include: (a) billet assignment; (b) program to be supported; (c) Navy originator to provide support NAVAIRWARCENWPNDIV, for weapons, targets, unmanned air vehicles, and remotely piloted vehicles; (d) duration of task in man-months; (e) data equipment introduced if requesting contractor assistance; (f) date equipment introduced into squadron (mo/day/yr); (g) designation of type of services requested (contractor or navy technical specialist); (h) date when assistance desired; (i) requesting activity and location; (j) equipment to be serviced; (k) short narrative justification; and (l) miscellaneous items not covered above.

4.4.5.4 Command Relationship. Navy civilian technical specialists and contractor engineering technical services are full-time members and direct representatives of COMNAVAIRSYSCOM imbedded in Fleet operational commands. The command’s in which they are assigned shall accept them as an integral part of that organization with status similar to members of the command. Sample of a request for FWST Technical Support/WAT support services can be found in Appendix H of the OPNAVINST 8000.16D.

CHAPTER 4.5

Maintenance Management

Table of Contents

Paragraph	Subject	Page
4.5.1	General	4-5-1
4.5.2	Responsibilities	4-5-1
4.5.3	Maintenance Requirements	4-5-2
4.5.4	Naval Weapons Station Production Facility Status Report	4-5-2

CHAPTER 4.5

Maintenance Management

4.5.1 General. Maintenance management is the process of planning, organizing, staffing, directing, and controlling organic industrial resources engaged in the physical performance of equipment maintenance. Resources consist of personnel, material, tools and equipment, facilities, technical data, and dollars provided to carry out the weapons maintenance mission. Management functions include maintenance planning, program coordinating, budgeting, and progress reporting which have been developed to meet the CNO asset readiness objectives. The progress evaluation of the maintenance program is measured against ability to achieve CNOs asset readiness objectives.

4.5.2 Responsibilities.

4.5.2.1 The CNOs (OPNAV) is responsible for the NAMP. The responsibilities for planning and programming resources for weapons are delegated to the Ordnance, Maintenance, Policy and Resources Section. OPNAV is responsible for budgeting and allocating funds necessary for rework and maintenance of weapons. The resource requirements are submitted to CNO from COMNAVAIRSYSCOM. The requirements are formalized in the CNOs DON Budget Submission. OPNAV plans and programs the budgeted resources to meet readiness objectives.

4.5.2.2 The Assistant Commander for Logistics and Industrial Operations/Fleet Support, through the Weapons Logistics Division, is responsible for management and allocation of funding for weapons maintenance programs. COMNAVAIRSYSCOM budgetary responsibilities include the preparation of project directives to those activities performing or managing weapons maintenance. COMNAVAIRSYSCOM is also responsible for gathering maintenance requirements for submission to OPNAV and for evaluating program progress through readiness reporting and funds expenditure.

4.5.2.3 As the maintenance engineering activity for air launched missiles, the NAVAIRWARCENWPNDIV is responsible for workload planning, scheduling, funding, monitoring, technical support, and coordination of missile maintenance. NAVAIRWARCENWPNDIV, responsibilities are implemented within its own command structure and through the employment of detachments of on-site representatives at Naval Weapons Stations (NWS) Yorktown, Seal Beach, and the Naval Airborne Weapons Maintenance Unit-One (NAWMU), Guam.

4.5.2.4 The Naval Surface Warfare Center (NSWC) Division, Crane, IN is responsible for workload planning, scheduling, funding, monitoring, technical support, and coordinating conventional ammunition maintenance. The NSWC Division's responsibilities are implemented within its own command structure and through the employment of NAVAIRWARCENWPNDIV, on-site detachments at NWS Yorktown, Seal Beach and the NAWMU Guam.

4.5.2.5 The NSWC Division, Indian Head, MD, is responsible for planning, scheduling, funding, and monitoring the workload for special weapons. This responsibility is implemented through its own command structure and employment of its detachment at McAlister, OK.

4.5.2.6 The U.S. Army Munitions and Chemical Command (AMCCOM), located at Rock Island, IL is assigned as the single manager for certain items for conventional ammunition. AMCCOM manages, operates, and maintains the inland storage depots and industrial facilities for conventional ordnance and ammunition with the exception of cartridge actuated devices and aircrew escape propulsion system devices. In coordination with COMNAVAIRSYSCOM, AMCCOM maintains the quality assurance program for these items. AMCCOM manages the wholesale inventory of these items stored at the Army Ammunition Plants and activities.

4.5.2.7 The NAVSUP GLS AMMO Mechanicsburg, PA provides inventory management of the Navy owned retail ordnance and ammunition inventory as well as propellant actuated devices and cartridge actuated devices.

4.5.3 Maintenance Requirements.

4.5.3.1 Forecast information pertaining to weapon Fleet requirements is obtained by COMNAVAIRSYSCOM from CNO. The budget for rework is formalized in the CNOs Department of the Navy Budget Submission (Exhibit 5). COMNAVAIRSYSCOMs Airborne Weapons Workload Schedule (AWWS) uses these requirements and combines them with asset information from the OIS. The AWWS currently provides an 8-calendar-quarter Intermediate and D-level workload forecast. The AWWS is further refined and updated during the semiannual COMNAVAIRSYSCOM maintenance management workload conferences. Interim adjustments are made at the industrial facilities through weekly monitoring of changing Fleet requirements, inventory shortfalls, and production results. Monthly status reports are generated through the services of NAVAIRWARCENWPNDIV, detachments. Once reviewed and approved, the AWWS becomes the COMNAVAIRSYSCOM workload forecast, which is published for COMNAVAIRSYSCOM, the COMNAVSEASYSCOM, the Naval Weapons Support Facilities, and the Naval Ordnance Station, Indian Head for planning purposes. Together with the appropriate maintenance standards contained in the COMNAVAIRSYSCOM and COMNAVSEASYSCOM Industrial Processing Guide, the AWWS is utilized by the inventory and supply managers for air launched missiles and components and the NAVSUP GLS AMMO for ammunition items and repair parts to plan for the time-phased capacities at the Naval Weapons Stations and the Naval Ordnance Station to perform the scheduled maintenance and assembly workload. Similar planning processes occur on an individual basis for each Naval Aviation and Contractor Depot.

4.5.3.2 After maintenance facilities complete their internal workload planning and subsequently begin production, program managers monitor the progress of work performed at the various maintenance facilities using the services of on-site detachments and resident representatives.

4.5.4 Naval Weapons Station Production Facility Status Report. If a Naval Weapons Station air-to-air or air-to-surface production facility becomes nonoperational due to unscheduled maintenance and it cannot reasonably be expected to return to operational status within 24 hours, the NWS shall submit a production facility status report to COMNAVAIRSYSCOM and COMNAVSEASYSCOM.

CHAPTER 4.6

Deficiency Reporting

Table of Contents

Paragraph	Subject	Page
4.6.1	General	4-6-1
4.6.2	Deficiency Reporting Website Description	4-6-2
4.6.3	Conventional Ordnance Deficiency Reporting	4-6-9
4.6.4	Explosive Mishap Reporting	4-6-19
4.6.5	Explosive Event Reporting	4-6-20
4.6.6	Joint Deficiency Reporting System	4-6-20
4.6.7	Reporting Responsibilities	4-6-21
4.6.8	Report Numbering	4-6-25

List of Illustrations

Figure	Title	Page
4-6-1	Category I Product Quality Deficiency Report Naval Message Instructions	4-6-5
4-6-2	Sample Category I Product Quality Deficiency Report Naval Message	4-6-6
4-6-3	Sample Category II Product Quality Deficiency Report	4-6-7
4-6-4	Conventional Ordnance Deficiency Report/Explosive Event Report Naval Message Instructions	4-6-11
4-6-5	Sample Conventional Ordnance Deficiency Report/Explosive Event Report Naval Message	4-6-16
4-6-6	Support Teams Locations and Address Information Group Listing	4-6-18
4-6-7	Processing of Reports	4-6-23

CHAPTER 4.6

Deficiency Reporting

4.6.1 General. AWIS is the premier life cycle decision support tool for NAVAIR ordnance systems. AWIS provides worldwide access of comprehensive, timely, accurate information related to development, production, performance and sustainment of ordnance systems to customers 24 hours a day. AWIS contains integrated modules supporting everything from initial delivery data to final expenditure (Firing Reports) data. AWIS has an active user base of over 7,000 users and is a web portal that may be accessed at https://awis.navair.navy.mil. All modules are accessed from this portal, or a similar portal https://awis.nmci.navy.smil.mil on the SIPRNet. One set of validation data is used throughout, allowing users to transparently move between modules with a single log-in. There are approximately 50 Modules within AWIS. Deficiency Reporting is contained within the DRWEB Module. The DRWEB Module allows you to submit Conventional Ordnance Deficiency Reports (CODRs), Product Quality Deficiency Reports (PQDRs) and Explosive Event Reports (EERs).

4.6.1.1 This chapter provides a method for reporting seven types of deficiencies. There are three types of deficiency reports submitted via the DRWEB Module; Conventional Ordnance Deficiency Report (CODR), Explosive Event Report (EER), and Product Quality Deficiency Report (PQDR). There are four deficiency reports that may correlate to Weapons Systems/Aircraft; Technical Publications Deficiency Report (TPDR), Engineering Investigation (EI), Explosive Mishap Report (EMR) and Hazardous Material Report (HMR). These are reported via Joint Deficiency Reporting System (JDRS) or Web Enabled Safety System (WESS). A description of each type of reports is as follows:

a. TPDR. The TPDR provides a simplified procedure for reporting technical publication safety hazards and routine deficiencies found in Naval technical publications. They are not used for reporting deficiencies in instructions or notices. Refer to COMNAVAIRFORINST 4790.2 series for detailed information on TPDRs.

b. EI. An EI applies to all aircraft systems, targets and their subsystems, equipment, components, related support equipment, special tools, fluids or materials, and test program tests used in the equipment operation. EIs on ordnance items are determined by the Fleet Support Team (FST) only. See paragraph 4.6.2.1 for details.

c. HMR. The HMR provides a standard method for reporting material deficiencies, which, if not corrected, could result in death or injury to personnel, or damage to or loss of aircraft, equipment, or facilities. Such incidents are reported regardless of how or when the discrepant condition was detected.

d. PQDR. The PQDR provides a method for reporting deficiencies in new or newly reworked Government owned material, which is under warranty. The PQDR program is an integral part of the Product Deficiency Reporting and Evaluation Program (PDREP) and provides a closed loop system for initial reporting, cause, corrective and preventive action, and status accounting of individual product quality deficiencies as well as to identify problems, trends, and recurring deficiencies. The goal of this program is to improve the quality of work performed by Naval

aviation depots, contractors, and subcontractors providing new or reworked material. See paragraph 4.6.3.1 for more details.

e. CODR. A CODR is initiated upon detection of a malfunction, observed defect, induced defect, or improper storage involving conventional ordnance, explosives, ammunition, explosive systems, or devices, including weapon systems components that come in direct contact with the ordnance (e.g. ammunition, explosives, missiles) and armament/handling/support equipment used to fire, handle, load, deliver, store or transport ordnance. See paragraph 4.6.4 for details.

NOTE

When submitting CODRs AIGS 7622 and 112 are mandatory. All USN and Marine Corps activities who handle ordnance/munitions will receive CODR message traffic. CODRs are a valuable tool for activities to review to help ensure similar mistakes are not repeated and they are required for (Naval Aviation Maintenance Discrepancy Reporting Program (NAMDRP) monitoring.

f. EMR. An EMR is initiated for an accident or incident involving conventional ordnance, ammunition, explosives, explosive systems and devices resulting in an unintentional detonation, firing, deflagration, burning, launching of ordnance material (including all ordnance impacting off-range), leaking or spilled propellant fuels and oxidizers (less OTTO fuel II), or chemical agent release. Accidents and incidents defined as explosive mishaps and meeting a severity classification of class A, B or C, will be reported as an EMR using the WESS, even if an ordnance system works as designed, and human error contributed to an incident or accident. EMRs will be reported in accordance with OPNAVINST 5102.1 series/MCO 5102.1 series. See paragraph 4.6.5 for details. Any explosive event not meeting one of these severity classifications will be reported as an EER in accordance with this manual.

g. EER. An EER is initiated for any event involving conventional ordnance, ammunition, explosives, explosive systems and devices resulting in an unintentional detonation, firing, deflagration, burning, launching of ordnance material (including all ordnance impacting off-range), leaking or spilled propellant fuels and oxidizers (less OTTO fuel II), or chemical agent release. Even if an ordnance system works as designed, and human error contributed to an event. This pertains to all events that do not meet the severity classification of class A, B or C. See paragraph 4.6.6 for details.

4.6.1.2 The following reports shall be submitted to the websites identified below:

a. TPDRs, EIs and HMRs are reported to JDRS via https://jdrs.mil.

b. CODRs, EERs, and PQDRs are reported to AWIS via https://awis.navair.navy.mil.

c. EMRs are reported to the Naval Safety Center using the WESS reporting system at http://safetycenter.navy.mil.

4.6.2 Deficiency Reporting Website Description. The Deficiency Reporting Website (DRWEB) system is an automated system that provides for the storage, analysis, tracking, and report generation for PQDR, CODR, and EER deficiency reports submitted against weapons/munitions.

a. Deficiency reports are automatically routed to FSTs and other concerned activities.

b. DRWEB provides all aspects of support required to resolve all weapons/munitions problems. This support begins with the actual discovery of a deficiency and ends when final solutions, appropriate modifications, or logistics actions that have been incorporated.

c. The system sorts the reports by problem type, deficiency report type, and weapons/munitions. It provides support throughout the deficiency investigation and solution cycle of weapons/munitions or support equipment.

d. DRWEB consists of two main sections: Tool Kit and Reports.

(1) The tool kit section allows the user to initiate, open, close, and search deficiency reports.

(2) The reports section allows the user to generate reports by selected report types. The report generation function is broken out into the following categories:

(a) Problem Number Reports.

(b) Deficiency Reports.

(c) ADHOC Reports.

(d) Narrative Search.

(e) Metrics by Fiscal Year.

(f) Metrics by Month.

(g) Metrics by Total Number.

4.6.2.1 PQDR Reporting. All ordnance guns, gun systems, CAD, PAD, and AAE PQDRs will be reported to DRWEB at https://awis.navair.navy.mil.

a. The PQDR program provides activities with a method for reporting deficiencies in new or newly reworked material. If the deficiency can be attributed to non-conformance of contractual or specification requirements or substandard workmanship a PQDR is generated. The deficiency or failure must occur at zero operating time, during an initial installation, operation, test, check, turn up, or first flight to be considered for a PQDR. Items under warranty are considered new material for PQDR purposes.

b. Discrepancies discovered after the initial use of an item do not qualify for PQDR reporting and shall be reported as a CODR, EER or EMR as appropriate.

c. The PQDR program differs from the EI in that it reports possible deficiencies in the manufacturing or rework process.

d. There are two categories of PQDRs: CAT I and CAT II.

(1) CAT I PQDRs are quality deficiencies which may cause death, injury, or severe occupational illness, cause loss or major damage to a weapon system, directly restricts the combat readiness of the using organization, or which results in a production line stoppage.

(2) CAT II PQDRs are quality deficiencies that may be assessed to have significant and widespread material or human resource impact and does affect safety of personnel, impair the combat efficiency of an individual or organization, or jeopardize mission accomplishment.

4.6.2.2 CAT I PQDR Reporting. PQDRs shall be submitted to the FST via the DRWEB https://awis.navair.navy.mil. If the website is not accessible, submit the PQDR as follows:

a. A CAT I PQDR will be submitted to the FST via Naval message using the preparation instructions contained in Figure 4-6-1 of this manual. Units may also generate a text file in accordance with Figure 4-6-1 and email file directly to the AWIS Support Desk at awis.help-desk@navy.mil, for entry into the system. E-mail must come from a user with submitter level access stating reason for web unavailability.

b. When urgency dictates, PQDRs may be reported by the most expeditious means available, for example, telephone or local visit. Oral communication will be confirmed by Naval message as described below in Figures 4-6-1 and 4-6-2.

4.6.2.3 CAT II PQDR Reporting. CAT II PQDRs will be submitted to the FST via the DRWEB website. If the website is not accessible, submit the PQDR as follows:

a. Submit a CAT II PQDR using an SF 368 after discovery of the deficiency. In no case will a CAT II PQDR be submitted by Naval message. Instructions for preparation of a PQDR on an SF 368 are contained in Figure 4-6-3. In case of a non-recoverable exhibit, a PQDR may be originated with data to follow. The three working days may be waived until all data is collected and is forwarded to the screening point.

b. Forward PQDRs to the FST for action in coordination with all concerned activities.

c. Send copies of all supporting documents, such as DD1348-1, DD1155, DD1371, DD1571, photographs, test reports, and other pertinent data to facilitate processing. Pictures, drawings, and other images can be submitted via the DRWEB website. Include the Report Control Number (RCN) on all documents. See paragraph 4.6.8 for RCN procedures.

d. Submit CAT II PQDRs to Naval Aviation Inventory Control Point Mechanicsburg, PA for deficiencies in common or general type materials, for example, nuts, bolts, wire, tools, lubricants, or corrosion preventive material received bad from supply, but not installed on or peculiar to a specific aircraft. Forward a copy of CAT II PQDR for GSA supplied tools to:

GENERAL SERVICES ADMINISTRATION
NATIONAL CUSTOMER SERVICE CENTER (6FR)
1500 EAST BANNISTER RD
KANSAS CITY, MO 64131-3088.

e. The supporting supply department will hold the defective material until disposition instructions are received from the FST or directing authority.

NOTE

Any material to be released to an authorized contractor's representative or shipped directly to a contractor's plant shall be processed through the supporting supply department. Supply may issue the material on a custody basis only after receiving authority to do so from the FST. DLR exhibits, sent to commercial contractors, will be shipped per the shipping instructions received from the FST.

f. CAT II PQDRs are normally responded to by letter.

NOTE

The SF 368 is used to report CAT II PQDRs only. Check block for CAT II at the top of the SF 368 form.

FROM (Originator) Complete Name of Activity and Office Code.
TO (Screening Point) FST for failed Item and Office Code.
Information Copies List all information addresses and their applicable office code(s). IE: cognizant inventory control point, functional wing, commanders, Marine Aviation Logistic Squadron(s). (See Figure 4-6-6 for AIG listings).
Message Classification List the message classification and applicable SSIC IE: Secret, confidential, or unclassified.
Subject List message subject. IE: CAT I PQDR, CAT II PQDR, CODR, EMR, ETC...
Message Identification Always fill in this block with "MSGID/GENADMIN/[Originator in the From block]".
Reference(s) List the message references beginning with an alpha designator starting with "A".
Remarks Originator completes the blocks of information on the item with the deficiency in the following order:
1. Reporting Custodian.
2. Failed Item FST.
3. Report Control Number (RCN).
4. Julian Date Deficiency Discovered/Location of Reporting Unit (unless classified).
5. DODIC/NSN.
6. Item Nomenclature.
7. Manufacture's Name/Unit Identification Code/Shipper's Name.
8. Part Number.
9. Serial Number/Lot/Batch Number/Number used.
10. Contract Number.
11. Indicate if item is new or newly reworked.
12. List date item was reworked or manufactured.
13. Operating time if item is under warranty or N/A if not applicable.
14. Indicate if item is government furnished equipment: Yes or No. Commercial activities only. All others place an N/A.
15. Number of deficient items.
16. Enter nomenclature of equipment that exhibit works on or with. IE: aircraft or next higher assembly.
17. Cost to replace or repair deficient/damaged or lost item.
18. Place an N/A in this block.
19. Indicate if item is under warranty: Yes or No.
20. Indicate work unit code if applicable; N/A if not applicable.
21. Reporting activity enters action or disposition instructions in this block.
22. Reporting activity enters pertinent details that provide additional information concerning the deficiency and/or explosive mishap. This space is reserved for nine specific blocks of information. These are:
    A. Narrative description of abnormal function, known or probable causes, pertinent technical directives not incorporated, comments or recommendation.
    B. Enter how safety of personnel or activity mission is affected.
    C. Enter the number of similar deficiencies in like items reported by the originating activity.
    D. Enter how deficiency was detected or confirmed.
    E. Enter storage/handling information if applicable.
    F. Indicate if supporting documents will be supplied.
    G. Enter description of incorrectly identified new material.
    H. Place an N/A in this block.
    I. Enter name, title, and DSN number of cognizant official.

Figure 4-6-1. Category I Product Quality Deficiency Report Naval Message Instructions

```
FROM FITRON TWO ONE THREE//
TO NAVAIRWARCENWPNDIV CHINA LAKE CA//684200D//
INFO// AIG 112// (Mandatory AIG)
AIG 7622// (Mandatory AIG)
AAC EGLIN AFB FL//YAL/259L//(FOR AIM-120 MISSILES)
BT
CLASSIFICATION//UNCLAS//
SUBJ//CAT I PRODUCT QUALITY DEFICIENCY REPORT
MSGID/GENADMIN/FITRON TWO ONE THREE//
REF/A/DOC/OPNAVINST 8000.16D/01SEP2010// NARR/REF IS NAVAL ORDNANCE
MANAGEMENT POLICY
RMKS/
1.    VF-213
2.    NAVAIRWARCENWPNDIV
3.    V09934-88-0007
4.    8035-DEPLOYED
5.    PV66/1410-00-140-7813
6.    AIM-9M7. RAYTHEON/94893/UNK
8.    639AS4992
9.    NDT-00362 SERIAL
10.   UNKNOWN
11.   NEWLY REWORKED
12.   20 APR 87
13.   NEWLY REWORKED
14.   N/A
15.   ONE
16.   ONE
17.   UNKNOWN
18.   N/A
19.   NO
20.   N/A
21.   HOLDING EXHIBIT 30 DAYS AT WEAPONS DEPT USS ABRAHAM LINCOLN (CVN72)
      ON DOCUMENTNUMBER “XXX”
22.   A. LOOSE SECTION CLAMP RING DISCOVERED DURING LOADING
      B. MISSILE WOULD HAVE BROKEN UPON LAUNCH. POTENTIAL LOSS OF A/C
      C. NONE
      D. VISUALLY DURING INSTALLATION
      E. N/A
      F. PHOTOS AVAILABLE ON REQUEST
      G. WEAPONS DEPT ABRAHAM LINCOLN (CVN72)
      H. N/A
      I. AOC L. SCHULZ//
```

Figure 4-6-2. Sample Category I Product Quality Deficiency Report Naval Message

PRODUCT QUALITY DEFICIENCY REPORT ☐ CATEGORY I ☐ CATEGORY II

1a. FROM (Originator)		2a. TO (Screening Point)	
1b. NAME, TELEPHONE NO. AND SIGNATURE	1c. DATE	2b. NAME, TELEPHONE NO. AND SIGNATURE	2c. DATE
3. REPORT CONTROL NO.	4. DATE DEFICIENCY DISCOVERED	5. NATIONAL STOCK NUMBER (NSN)	6. NOMENCLATURE
7a. MANUFACTURER/CITY/STATE	7b. MFRS CODE	7c. SHIPPER/CITY/STATE	8. MFRS PART NO.
9. SERIAL/LOT/BATCH NO.	10a. CONTRACT NO.	10b. PURCHASE ORDER NO.	10c. REQUISITION NO. / 10d. GBL NO.
11. ITEM ☐ NEW ☐ REPAIRED/ OVERHAULED	12. DATE RECD, MFRD, REPAIRED, OR OVERHAULED	13. OPERATING TIME AT FAILURE	14. GOVERNMENT FURNISHED MATERIAL ☐ YES ☐ NO
15. QUANTITY	a. RECEIVED	b. INSPECTED	c. DEFICIENT / d. IN STOCK
16. DEFICIENT ITEM WORKS ON/WITH — a. END ITEM (AIRCRAFT, MOWER, ETC)	(1) TYPE/MODEL/SERIES		(2) SERIAL NO.
b. NEXT HIGHER ASSEMBLY	(1) NATIONAL STOCK NO. (NSN)	(2) NOMENCLATURE	(3) PART NO. / (4) SERIAL NO.
17. UNIT COST $	18. ESTIMATED REPAIR COST $	19a. ITEM UNDER WARRANTY ☐ YES ☐ NO ☐ UNKNOWN	19b. EXPIRATION DATE

20. WORK UNIT CODE/EIC (NAVY AND AIR FORCE ONLY)

21. ACTION/DISPOSITION ☐ HOLDING EXHIBIT FOR _____ DAYS ☐ RELEASED FOR INVESTIGATION ☐ RETURNED TO STOCK ☐ DISPOSED OF ☐ REPAIRED ☐ OTHER (EXPLAIN IN ITEM 22)

22. DETAILS (Describe, to best ability, what is wrong, how and why, circumstances prior to difficulty, description of difficulty, cause, action taken, including disposition, recommendations. Attach copies of supporting documents. Continue on separate sheet if necessary.)

SAMPLE

23. LOCATION OF DEFICIENT MATERIAL

24a. TO (Action Point)		25a. TO (Support Point) (Use Items 26 and 27 if more than one)	
24b. NAME, TELEPHONE NO. AND SIGNATURE	24c. DATE	25b. NAME, TELEPHONE NO. AND SIGNATURE	25c. DATE
26a. TO (Support Point)		27a. TO (Support Point)	
26b. NAME, TELEPHONE NO. AND SIGNATURE	26c. DATE	27b. NAME, TELEPHONE NO. AND SIGNATURE	27c. DATE

NSN 7540-00-133-5541 STANDARD FORM 368 (REV. 10-85)

Figure 4-6-3. Sample Category II Product Quality Deficiency Report (SF 368) (Front)

28. FINDINGS AND RECOMMENDATIONS OF INVESTIGATION. (Explain in detail. Continue on separate sheet of paper, if necessary)

SAMPLE

29. ACTION TAKEN

30. RESULTS OF DEPOT SURVEILLANCE

INSTRUCTIONS

1a. **FROM (Originator)** Complete name of activity (no acronyms when sending deficiency report across component lines), activity address code (ACC), address including zip code of the activity originating the report.

1b. **NAME, TELEPHONE NO., AND SIGNATURE** Provide name, telephone no. (including all available telephone numbers; FTS; DSN, and commercial), and signature of an individual who can serve as a contact for questions regarding the report and/or to request exhibits or samples.

1c. **DATE** Enter date report was signed and forwarded to the screening or action point.

2a. **TO (Screening Point)** The originating point will complete name of the screening point activity (no acronyms when deficiency report will be sent across component lines), the activity address code (AAC), address including zip code of screening point where the report needs to be sent by the originator's activity. For those activities that do not have screening points, leave blank.

2c. **DATE** Enter the date the person finished processing the report at the screening point.

3. **REPORT CONTROL NO.** Number assigned to report when a numbering system is used. Those activities which are reporting quality deficiencies across component lines and are to comply with the DLA Regulation 4155.24 should reference the report control number as prescribed in the regulation.

7a. **MANUFACTURER/CITY/STATE** Name of the manufacturer, the maintenance contractor, or Government activity which last repaired or overhauled the deficient item. For motor vehicles or components thereof, enter name of manufacturer of the vehicle or component, as appropriate.

7b. **MANUFACTURER'S CODE** Code of the manufacturer as listed in cataloging Handbook H4.1 (Name to code), Federal Code for Manufacturers (United States and Canada).

7c. **SHIPPER/CITY/STATE** When the shipper of an item is different from the manufacturer, also include the shipper's or supplier's name.

9. **SERIAL/LOT/BATCH NO.** Manufacturer's serial, lot, or batch number of deficient item as applicable.

10. **CONTRACT; PURCHASE ORDER; REQUISITION; GOVERNMENT BILL OF LADING (GBL) NO.** Enter these numbers or any other available transportation document number in lieu of the GBL. Such numbers appear on the container, purchase document and/or the item. It is extremely helpful if these items are furnished when the material was supplied by GSA.

11. **ITEM** Check the appropriate block; provide the dates manufactured and received in Block 12, if available

13. **OPERATING TIME AT FAILURE** Time item had been in operation since new, overhauled, or repaired when the deficiency was discovered, citing the appropriate performance element (miles, cycles, hours, etc.).

15c. **QUANTITY DEFICIENT** Enter the quantity found deficient of those inspected.

15d. **QUANTITY IN STOCK** Enter the quantity of material from the same manufacturer remaining in stock.

17. **UNIT COST** Dollar value of deficient item when known. Not applicable on reporting vehicles to GSA.

18. **ESTIMATED REPAIR COST** Unit cost times number of units for replacement or estimated repair costs (including overhead) times number of units for correcting all the deficient items reported when it can readily be determined. Not applicable on reporting vehicles to GSA.

19. **ITEM UNDER WARRANTY** Check if item is known to be covered by contractor warranty. If yes, provide expiration date.

21. **ACTION/DISPOSITION** A check in the appropriate block to indicate the action taken or requested. When an exhibit or sample is being held, indicate the number of days in the space provided. (An exhibit or sample shall be held for a minimum of 30 calendar days from date the report is transmitted to the action point. Reporting activities are reminded that the packaging, packing, and shipping containers are to be held along with the exhibits to facilitate investigation.) When none of the items indicate the actions or disposition taken or requested, check "Other" and identify the nature of action taken or requested in item 22.

23. **LOCATION OF DEFICIENT MATERIAL** Address and location of deficient material.

24. **TO (Action Point)** Name, and clear address, including zip code of the action point to which the report is being submitted.

24c. **DATE** Enter the date the report was forwarded to an action point or the date the findings and recommendations were completed.

28. **FINDINGS AND RECOMMENDATIONS OF INVESTIGATION** Include the findings and recommendations for resolution of complaint.

29. **ACTION TAKEN** State the action taken to resolve the complaint.

30. **RESULT OF DEPOT SURVEILLANCE** Show results of depot surveillance and planned action (i.e., replacement or repair by contractor, disposal, issue, etc.).

*U.S. GPO: 1986-496-360

STANDARD FORM 368 (REV. 10-85)

Figure 4-6-3. Category II Product Quality Deficiency Report (SF 368) (Back) - contd.

4.6.2.3.1 Material Handling Instructions for PQDR. PQDR material shall be handled and prepared as follows:

a. Maintain material in an "as is" condition. Whenever a hazardous condition is evident, request shipping instructions from the FST.

b. Take special care to cap or package material immediately upon removal from the system in such a manner as to prevent corrosion, contamination, or other damage that may contribute to confusion or loss of possible cause factors.

NOTE

Do not attempt any adjustments, disassembly, or perform any cleaning externally or otherwise. In the event target engines or components have been immersed in seawater, removal of rust or corrosion damage to the items during PQDR processing, stowing and shipping is permissible. If any adjustment, disassembly, or cleaning was performed during a local investigation, a list of particulars describing the local investigation must accompany the material to the FST. Decontamination procedures in accordance with Maintenance Manual Instructions are allowed on targets retrieved from the sea or with land recovery.

c. Forward samples of fluid in clean, sealed, authorized containers. If contamination is suspected, annotate sample bottles accordingly. Do not attempt to reassemble fragments of failed material. Wrap each fragment separately to prevent damage caused by relative movement. When feasible, forward associated accessories, components, or material suspected of contributing to the malfunction or mishap. Do not touch failed surfaces since this could mask failure data.

d. Attach the PQDR to the ordnance component or assembly. Ensure the exhibit is marked with the PQDR exhibit control number. PQDR is marked "EI" or "PQDR" in 3 inch red letters, in a manner not to obscure vital data prior to forwarding the defective material to the supporting supply department.

e. In the event of deficiencies in hazardous materials (lubricants, greases, adhesives, sealant, etc.) a copy of the CAT II PQDR shall also be submitted to the COMNAVAIRWARCENWPNDIV China Lake's airborne weapon/target system pollution prevention and hazardous materials control and management program office.

f. In cases where the exhibit was expended, attach the PQDR exhibit control number to the data package.

g. In order to formally close a PQDR written on an expended target, the cause and corrective action data will be reviewed by a committee of engineers appointed or delegated by the individual target programs. The closing action will then be forwarded to the originator.

4.6.3 Conventional Ordnance Deficiency Reporting. A Conventional Ordnance Deficiency Reporting (CODR) incident is where ordnance or weapon systems fail to function in accordance with the designed and/or intent of the system and results in no property damage or injury. This includes improper storage, explosives, ammunition, explosive systems, or devices, including weapon systems components that come in direct contact with the ordnance (e.g. ammunition, explosives, missiles) and armament, handling, support equipment used to fire, handle, load, deliver, store or transport ordnance.

4.6.3.1 CODRs are initiated for the following events using the AWIS DRWEB module at https://awis.navair.navy.mil. For commands without internet access a Naval message will be sent using the procedures defined in Figures 4-6-4 and 4-6-5. Units may also generate a text file in accordance with Figure 4-6-6 and email file directly to the AWIS Support Desk at awis.helpdesk@navy.mil, for entry into the system. E-mail must come from a user with submitter level access stating reason for web unavailability.

a. Malfunction. The failure to function properly of conventional ordnance, explosives, ammunition, small arms, weapons, or weapon system components and support equipment that come in direct contact with the ordnance. (For example: failure to launch, dud weapons, gun fails to cycle, JATO fails to ignite, etc.).

b. Inadvertent Launch or Arming. The unintentional launch or arming of an explosive component or weapon caused by mechanical failure.

c. Defective Weapons Support Equipment. Deficiencies involving any equipment or device used in the manufacture, test, assembly, handling, or transportation (i.e. skids, trailers, slings or similar equipment) of any explosive system.

d. Observed Defect. A discovered defective weapon or weapon system component that comes in direct contact with the ordnance, small arms, weapons, conventional ordnance, explosives, and ammunition. (For example: protruding primers, cracked grains, damaged or broken breech bolts, broken or scratched missile radomes, and advanced corrosion). Items that are under warranty, new, or newly reworked will be reported using a PQDR per this manual.

e. Other Deficiencies. The failure of an explosive component or explosives system to test, calibrate, or otherwise meet preloading or pre-launch requirements for example: the failure of Built-In-Test (BIT) and OTTO fuel spills. Any part of ordnance, ordnance systems, or ordnance equipment falling from aircraft requires a CODR per this manual.

4.6.3.2 The primary means of generating a preliminary, interim or final response to a CODR is by using the AWIS DRWEB website and technical dialogs to interested activities. In addition a Naval Message is automatically generated for units with no Internet access.

4.6.3.3 Handling and Preparation of Deficient Material. This section applies when the FST decides that a CODR should become an EI. EIs on ordnance items are determined by the FST only. When this occurs the following handling and preparation of the material applies.

NOTE

EIs are assigned by the Assistant Program Manager, Logistics (APML)/FST only. Reporting units are not to request EIs on ordnance items.

a. The supporting activity will hold defective material until disposition instructions are received from the FST or directing authority.

NOTE

Any material to be released to an authorized contractor's representative or shipped directly to a contractor's plant shall be processed through the supporting supply department. Supply can issue the material on a custody basis only after receiving authority from the FST. DLR exhibits, which are sent to commercial contractors, will be shipped per the shipping instructions received from the FST.

FROM (Originator) Complete Name of Activity and Office Code.
TO (Screening Point) Enter FST for failed Item/Office Code/give Missile Nomenclature.
Information Copies List all information addresses and their applicable office code(s). IE: cognizant inventory control point, functional wing, commanders, Marine Aviation Logistic Squadrons (see Figure 4-6-6 for AIG listings).
Message Classification List the message classification and applicable SSIC IE: Secret, confidential, or unclassified.
Subject List message subject. IE: CODR, EER
Message Identification Always fill in this block with ”MSGID/GENADMIN/[Originator in the From block]”.
Reference(s) List the message references beginning with an alpha designator starting with ”A”.
Remarks Originator completes seven individual parts of information on the deficiency. List each part with an alpha designator as described below.
ALPHA: General
1. Unit Identification Code. Enter unit Identification Code.
2. Report Control Number (RCN). Enter RCN.
3. Local date and Time. Enter date and time deficiency was discovered and location of reporting unit. Omit the location if the entry will cause the message to become classified.
4. Geographic Location. If classified give general area.
5. Location. Enter location where deficiency occurred. Omit entry if entry causes message to become classified.
6. Evolution at time. Enter evolution at the time deficiency occurred. IE: Loading, Unloading, Handling, UNREP, PAC-FIRE, POST FLIGHT CHECK, MISSILEX, GUNEX, Routine Maintenance.
7. Indicate ship or aircraft status. Enter status of ship or aircraft. IE: Anchored, in port, in flight, underway, etc.
8. Aircraft Information. This block is for aviation activities only all others enter ”N/A”.

A. Aircraft Type and BUNO.

B. Delivery Data. Enter release airspeed/mach number, release dive angle, release interval, aircraft configuration, release altitude, release acceleration, turbulent or non-turbulent flight conditions at release, delivery mode, non-retard, etc.

C. Ordnance Configuration. List the configuration of ordnance item with deficiency. IE: Fuzes, Plugs, thermal protection, etc.

D. Aircraft Configuration. List the aircraft rigging, load configuration, stations used, IMER/ITER stations, type of arming wire, routing/rigging for fuze fins, arming solenoid used nose/tail.

Figure 4-6-4. Conventional Ordnance Deficiency Report/ Explosive Event Report Naval Message Instructions

BRAVO: Material
1A. Explosive System Involved. List equipment malfunction, damage or destroyed. Repeat information for all systems involved.
1. Nomenclature, MK, Mod, Model.
2. Equipment Identification Code (EIC) and Work Unit Code.
3. DODIC.
4. NSN.
5. Lot Number.
6. Serial Number.
7. Describe Damage to Item.
8. Number of Items. If defective material suspected state number of items remaining in same lot or batch.

B. Launch Devices Involved.
C. Repeat for all associated hardware.
D. Bulk or Batch Explosive Material Involved.
E. All other DOD Property.
F. Non-DOD Property.

CHARLIE: Injuries/Fatalities
1. DETAILS OF INJURY/FATALITY. List the extent of injuries or occupational illness, specify if fatality, missing members, permanent total disability, permanent partial disability, or no disability likely, if the mishap involves more than one person, be specific in paragraph Charlie about which person is being described, repeat Items 1 through 8 for each person.
2. AGE/SEX.
3. DESCRIBE PERSON INJURED. List the Rank and Designator, Rate and NEC, Grade, Job Title and Employment status on each person injured. (For example: USN, USNR, other DOD personnel, Federal Civil Servants, Contractors, Foreign Military Exchange personnel, and Foreign Civilians).
4. DUTY STATUS. List the duty status of person injured (on or off duty) and UIC (if different from reporting activity). If the mishap involves injuries to personnel from different commands, specify the UIC of each individual.
5. TASK. Specific job or activity individual engaged in at time of mishap. (For example: conducting planned maintenance, standing watch, handling ammunition, training, or weapons maintenance).
6. JOB EXPERIENCE. Number of months experience at the job or activity. This information is to determine the experience the person possessed for the job or activity.
7. MEDICAL DIAGNOSIS. Include part of body and type of injury.
8. ESTIMATED LOSS OF TIME.

A. Total number of workdays lost. Report actual number of days including workdays hospitalized.
B. Number of days actually hospitalized.

Figure 4-6-4. Conventional Ordnance Deficiency Report/ Explosive Event Report Naval Message Instructions - contd.

DELTA: Type of Mishap. List one of the following in the message.
1. Detonation.
2. Induced Defect.
3. Malfunction.
4. Observed Defect.
5. Fail to Test.
6. Chemical Agent Release.
7. Things Falling Off Aircraft (TFOA).
8. Other.

ECHO: Chain of Events. Enter a narrative of what occurred. The narrative should include the following:

1. Chain of Events. Include chain of events leading up to, through, and subsequent to the mishap or deficiency. State if mishap or deficiency was ”induced,” caused by reporting activity, or ”discovered,” not caused by reporting activity, but revealed during inspection or test. Include as much information as possible to provide a clear understanding of exactly what happened or might have happened including suspected or known causes. List secondary cause, if applicable. For weapon systems that use Common Munitions BIT/Reprogramming Equipment (CMBRE) include fail codes. If desired, request guidance, information or assistance from higher authority.

2. Action/Disposition Of Discrepant Material. If discrepant material is being held for investigation, indicate the holding activity location, and time to be held at the activity. If the using unit is requesting an EI, it will be noted here not on the subject line. If the exhibit is a CAD/PAD the item shall be clearly identified with the investigative report number, assigned condition code ”J”, and turned in to local station/ship’s ordnance/Weapons Department/NMC marked ”HOLD UNTIL MM/DD/YYYY (14 days from the turn-in date) PENDING DISPOSITION GUIDANCE FROM IHDIV, NSWC”. All CAD/PAD CODRs, PQDRs and mishap reports shall contain the turn-in document number and identify the activity and a point of contact (phone and e-mail address) at the Weapons Department/FRCs/NMCs holding the material.

NOTE

3. Person Who Caused Mishap.

a. Supervisor or foreman, operator, maintenance worker, off-duty military, other, or unknown.

b. Rank/Rate.

Figure 4-6-4. Conventional Ordnance Deficiency Report/ Explosive Event Report Naval Message Instructions - contd.

FOXTROT: Cause Factors.
1. CAUSE OF MISHAP OR DEFICIENCY. State appropriate cause: Material failure, improper design, environment, human error, or supervisory error, if material or design, describe how equipment failed. If environment, state if not stored properly, corroded, etc. If human error, supervisory error, or improper procedure, complete items 2 through 4 below.
2. HUMAN ERROR. What did the person or persons fail to do? For example: correctly operate controls; accomplish planned maintenance or corrective maintenance properly; follow loading and downloading checklist, Standard Operating Procedure (SOP), or maintenance instruction manuals; recognize hazardous situations; use proper caution for known risk; use protective clothing or equipment; use proper tool or equipment; plan adequately, supervise progress of work; other.
3. INCOMPLETE ACTIONS. Why did he/she fail to carry out action of FOXTROT 2? Lack of concern/interest; inadequate supervision, distracted or inattentive; haste, overconfidence; emotionally aroused; inadequate knowledge; insufficient experience; fatigue; alcohol; drugs; illness; misunderstanding; design; or other.
4. QUALIFICATION/CERTIFICATION held. Enter Yes/No, or not required to indicate if person holds a current qualification/certification IAW OPNAVINST 8020.2C/MCO8023.2A for each person involved in the mishap as a causal factor.
5. For Production base only.
    A. Effects.
    B. Exposure to significant environmental conditions (I.E., EMR, electrostatic, relative humidity, temperature, etc.).

Figure 4-6-4. Conventional Ordnance Deficiency Report/ Explosive Event Report Naval Message Instructions - contd.

GOLF: Recommendations/Lessons Learned.
Based on the above causes for the accident, a recommendation must be given regarding how future mishaps of this or a related type can be avoided. If several factors are involved, be sure to list them. This item is perhaps the most important part of the mishap report, since if good recommendations are implemented, repetitive mishaps can be prevented. If material/design defect, suggest changes needed for safer equipment. If caused by personnel error, suggest changes needed for safer equipment. If caused by personnel or supervisory error, suggest changes in SOP if appropriate. For incidents affecting the production base, list proposed corrective action.
HOTEL: Supplemental Data.
1. Technical Investigation requested for incidents affecting the production base (list type of investigation required or planned).
2. Items/Exhibits available: Yes, No or N/A.
3. Photographs available: Yes, No or N/A.
4. Supplemental report required: Yes or No.
5. Original report control number.
PART II (Complete only if surface-launched guided missiles are involved).
In case of misfire or duds, if ready to fire light was not illuminated, determine, if possible, which of the following interlocks were not present:
ALPHA:
1. Launcher system blast door closed.
2. Launcher SYNC.
3. Firing rail loaded.
4. MLC extended.
5. Launcher point to safe firing zone.
BRAVO: Intended off-load date of items involved and activity, if known.

Figure 4-6-4. Conventional Ordnance Deficiency Report/ Explosive Event Report Naval Message Instructions - contd.

```
FM LANTORDCOM DET OCEANA VA//AMO// (MESSAGE ORIGINATOR OFFICE CODE)
TO NAVAIRWARCENWPNDIV CHINA LAKE CA//674200D// (OR APPLICABLE OFFICE CODE)
      AIG 112// (Mandatory AIG)
      AIG 7622// (Mandatory AIG)
      AAC EGLIN AFB FL//YAL/259L// (FOR AIM-120 MISSILE)
      ACC YU EGLIN AFB FL//YU/YUP// (FOR JDAM)
      AIG XXXX// (SEE FIGURE 4-6-6 FOR APPROPRIATE AIG)
INFO  COMNAVAIRWARCENWPNDIV CHINA LAKE CA// (APPLICABLE OFFICE CODE)
      COMNAVAIRLANT NORFOLK VA// (APPLICABLE OFFICE CODE)
      COMNAVAIRPAC SAN DIEGO CA// (APPLICABLE OFFICE CODE)
BT
UNCLAS//N08810//
MSGID/GENADMIN/DRWEB VIA NAWCWD CHINA LAKE//
SUBJ/SIDEWINDER CONVENTIONAL ORDNANCE DEFICIENCY REPORT
REF/A/DOC/OPNAVINST 8000.16D/01SEP2010//
REF/B/DOC/A1-F18AC-LWS-000/01JUN2003//
NARR/REF A IS OPNAVINST 8000.16D NAVAL ORDNANCE MANAGEMENT POLICY.
REF B IS FA-18 WEAPONS STORED LOADING MANUAL.//
POC/M. ANDREWS/GYSGT/123-555-1234/DSN:555-1234/EMAIL:ANDREWSMW@NAVY.MIL//
POC/P. ZAWCHENUK/AOCS/123-555-1234/DSN:555-1234/EMAIL:ZAWCHENUKP@NAVY.MIL//
POC/J. WALDREP/AOCM/123-555-1234/DSN:555-1234/EMAIL:WALDREPJ@NAVY.MIL//

RMKS/SUBMITTED BY ****STRIKEFITRON ONE TWENTY FIVE/ORD****
THIS MESSAGE WAS AUTO GENERATED FROM THE DRLOG WEBSITE FOR NON-WEBSITE CAPABLE
ORGANIZATIONS. IF RESPONSE VIA WEBSITE IS NOT POSSIBLE, TO: LINE RECIPIENTS
SHOULD ADDRESS RESPONSE DIRECTLY TO: ****NAWCWD**** WHEN APPROPRIATE. THIS
CODR REPORT WILL BE PROCESSED VIA THE AWIS WEBSITE. FOR FURTHER DETAILS OR
REAL TIME STATUS VISIT THE AWIS WEBSITE AT: HTTPS://AWIS.NAVAIR.NAVY.MIL.
PART I            ALPHA:
1. 09111
2. R09111-03-0080
3. 0800 01AUG2004
4. NAS LEMOORE
5. FLIGHT LINE
6. WEAPONS INSPECTION
7. PARKED
8. A.1.F/A-18D
A. 165527
B. N/A
C. N/A
D. STA 1, 9 CATM-9, STA 3, SUU-63 EMPTY, STA 5 SUU-62 W/EXTERNAL FUEL TANK
BRAVO:
1.A. EXPLOSIVE SYSTEMS INVOLVED
(1) GUIDED MISSILE, TRAINING, CATM-9M-12
(2) N/A
(3) PU70
(4) 1410-10-407-4707
(5) N/A
```

Figure 4-6-5. Sample Conventional Ordnance Deficiency Report/ Explosive Event Report Naval Message

```
(6) MTV00123
(7) NONE.
(8) N/A
B. LAUNCH DEVICES
(1) LAUNCHER, GUIDED MISSILE, LAU-7B/A-1
(2) 751B600
(3) 1440-01-458-4568
(4) STA 1
(5) N/A
(6) NONE.
C. ASSOCIATED HARDWARE
(1) WING ASSEMBLY, MK-1 MOD-1
(2) N/A
(3) 1420-00-906-7971
(4) N/A
(5) DELAMINATION.
D. N/A
E. N/A
F. N/A
2. ESTIMATED COST TO REPAIR OR REPLACE
A. $37715
B. $52205
C. $0
D. N/A
E. N/A
F. $89920
CHARLIE: N/A
DELTA:
1. OBSERVED DEFECT
ECHO:
1. CHAIN OF EVENTS: MISSILE WAS LOADED IAW REF B. UPON RETURN FROM FLIGHT
WEAPONS INSPECTION REVEALED DELAMINATION OF WING. DOWNLOADED WEAPON IAW REF B.
CFA RESPONSE REQUESTED.
2.TURNED IN TO AIMD.
FOXTROT:
1. CAUSE DESCRIPTION: UNKNOWN
2. N/A
3. N/A
4. N/A
5. N/A
GOLF: COMMAND WILL CONTINUE TO INSPECT WINGS FOR FUTURE OCCURRENCES.
HOTEL:
1. FRAGMENTS ARE AVAILABLE.
2. PHOTOS ARE AVAILABLE FROM ORIGINATING UNIT.
3. N/A
PART II N/A
BT
#3271
NNNN
```

Figure 4-6-5. Sample Conventional Ordnance Deficiency Report/ Explosive Event Report Naval Message - contd.

EQUIPMENT	ADDRESS INDICATOR (AIG)	FST
Aviation Weapons Support Equipment	AIG 423	NAWCAD Lakehurst NJ
Rockets Air Launched	AIG 458	NAVSURFWARCENDIV Indian Head MD
Rockets Surface Launched except ASROC	AIG 9281	NAVSURFWARCENDIV Indian Head MD
Ammo less than 76mm all 7.62 and .50 Cal/ Laser Aiming	AIG 11113	NAVSURFWARCENDIV Crane IN
NAVSEA (CWIS, 25mm, 30mm, & 57mm) Ammunition less than 76mm 20 and 25mm	AIG 11113	NAVAIRWARCENWPNDIV Point Mugu CA
NAVAIR (20mm & 25mm) Pyrotechnics and Chemicals	AIG 11116	NAVSURFWARCENDIV Crane IN
Ammunition 76mm and Larger	AIG 11124	NAVSURFWARCENDIV Crane IN
Airborne Expendable Countermeasures	AIG 11167	NAVSURFWARCENDIV Crane IN
Mines and Projector Charges	AIG 11233	NAVSURFWARCENCOASTSYSTA Panama City FL
Demo Materials and Bulk Explosives	AIG 11345	NAVSURFWARCENDIV Crane IN
Missiles Sub Launched	AIG 11352	NAVUNSEAWARCENDIV Newport RI
Missiles Air Launched	AIG 11369	WPNSTA Earle Colts Neck NJ (PHS&T Center)
Cartridges and CADs	AIG 11382	NAVSURFWARCENDIV Indian Head MD
Ammo Small Arms and Landing Force (a)	AIG 11383	NAVSURFWARCENDIV Crane IN
Free Fall Weapons excluding Mines and Depth Charges	AIG 11384	NAVAIRWARCENWPNDIV Point Mugu CA
Torpedoes Sonobouys and ASROC	AIG 11388	NAVUNSEAWARCENDIV Keyport WA
Missiles Surfaced Launched	AIG 11393	NAVSURFWARCENDIV Port Hueneme CA
Tomahawk Missiles	AIG 11412	NAVSURFWARCENDIV Port Hueneme CA
Research Development or Production Base	AIG 11449	NAVORDSAFSECACT Indian Head MD
NAVAIR related Weapons Systems and Equipment (Gun Systems)	AIG 11450	NAVAIRWARCENWPNDIV China Lake CA
NAVAIR Bomb Racks/Aircraft Missile Launchers	AIG 11450	NAVAIRWARCENWPNDIV China Lake CA
NAVSEA related Weapons Systems and Equipment	AIG 11452	NAVSURFWARCENDIV Det Louisville KY
Shipping Containers and Handling Equipment	AIG 11477	WPNSTA Earle Colts Neck NJ (PHS&T Center)

NOTE:

Includes 7.62 mm, .50 Cal, Hand Grenades, Land Mines, 40 mm Ctg. Grenades, and Shoulder Launched Rockets. AIGs 112 and 7622 will be used for all CODR, EER and PQDR Naval messages.

Figure 4-6-6. Support Teams Locations and Address Information Group Listing

b. Maintain material in an "as is" condition, ensuring that the EI exhibit control number assigned by the FST appears on all documents, exhibits, and packaging. When a hazardous condition is evident, request shipping instructions from the FST.

c. Cap or package material immediately upon removal from the system in such a manner as to prevent corrosion, contamination, or other damage that contribute to confusion or loss of possible cause factors. Do not attempt any adjustments, disassembly, or perform any type of cleaning, externally or otherwise. If any adjustment, disassembly, or cleaning was done during a local investigation, a list of particulars describing the local investigation must accompany the material to the FST.

d. Do not attempt to reassemble fragments of failed material. Wrap each fragment separately to prevent damage caused by relative movement. When feasible, forward associated accessories, components, or material suspected of contributing to the malfunction or mishap. Do not touch failed surfaces as this could mask failure data.

e. If the defective component is an explosive cartridge, CAD/PAD, turn in the defective material to the weapons or ordnance department with a DD 1348-1, and obtain a locally assigned turn-in document number. Include this turn-in document number and name of the holding activity on the EI.

f. Attach the EI and applicable documentation to the component or assembly. Ensure that the EI exhibit is marked with the EI exhibit control number.

4.6.4 Explosive Mishap Reporting. An accident or incident involving conventional ordnance, ammunition, explosives, explosive systems and devices resulting in an unintentional detonation, firing, deflagration, burning, launching of ordnance material (including all ordnance impacting off-range), leaking or spilled propellant fuels and oxidizers (less OTTO fuel II), or chemical agent release. Accidents and incidents defined as explosive mishaps and meeting a severity classification of class A, B or C, will be reported as an Explosive Mishap Reporting (EMR) using WESS at http://safetycenter.navy.mil and in accordance with the instructions outlined in OPNAVINST 5102.1 series/MCO 5102.1 series, even if an ordnance system works as designed, and human error contributed to an incident or accident. Any explosive event not meeting one of these severity classifications will be reported as an EER in accordance with paragraph 4.6.5.

a. Detonation, Deflagration, Burning, or Firing. It is an unintentional or inadvertent initiation, explosion or reaction of explosive material, component or system. Example: accidental discharges of all guns, including small arms (this includes discharge of weapon in government quarters or accidental discharges and ricochets during training on ranges), aircrew escape propulsion systems, marine location markers, flares, etc.

b. Inadvertent Launch. Is an unintentional launch of a weapon.

c. Chemical Agent Release. Any unintentional or uncontrolled release of a chemical agent when:

(1) Damage occurs to property from contamination, or costs are incurred for decontamination.

(2) Individuals exhibit physiological symptoms of agent exposure.

(3) The quantity released to the atmosphere creates a serious potential for exposure.

d. Propellant and Oxidizers. Is a leaking or spilled propellants (both solid and liquid), propellant fuels and oxidizers (less OTTO fuel II).

e. All Ordnance Impacting Off-Range. This includes all small arm ranges where ricochets cause bullets to impact outside surface danger zones.

4.6.5 Explosive Event Reporting. Any event involving conventional ordnance, ammunition, explosives, explosive systems and devices resulting in an unintentional detonation, firing, deflagration, burning, launching of ordnance material (including all ordnance impacting off-range), leaking or spilled propellant fuels and oxidizers (less OTTO fuel II), or chemical agent release. Explosive events will be reported using the AWIS and this manual. Even if an ordnance system works as designed, and human error contributed to an event. This pertains to all events that do not meet the severity classification of class A, B or C.

a. An EER is initiated for the following events using the AWIS website at https://awis.navair.navy.mil. For commands without internet access use the procedures defined in Figures 4-6-4 and 4-6-5. Units may also generate a text file in accordance with Figure 4-6-6 and email file directly to the AWIS Support Desk at awis.helpdesk@navy.mil, for entry into the system. E-mail must come from a user with submitter level access stating reason for web unavailability.

(1) Detonation, Deflagration, Burning, or Firing. It is an unintentional or inadvertent initiation, explosion or reaction of explosive material, component or system. Example: unintentional discharges of all guns, including small arms (this includes discharge of weapon in government quarters or unintentional discharges and ricochets during training on ranges), aircrew escape propulsion systems, marine location markers, flares, etc.

(2) Inadvertent Launch. Is an unintentional launch of a weapon.

(3) Chemical Agent Release. Any unintentional or uncontrolled release of a chemical agent when:

(a) Damage occurs to property from contamination, or costs are incurred for decontamination.

(b) Individuals exhibit physiological symptoms of agent exposure.

(c) The quantity released to the atmosphere creates a serious potential for exposure.

(4) Propellant and Oxidizers. Is a leaking or spilled propellants (both solid and liquid), propellant fuels and oxidizers (less OTTO fuel II).

(5) All Ordnance Impacting Off-Range. This includes all small arm ranges where ricochets cause bullets to impact outside surface danger zones.

b. The primary means of generating a preliminary, interim or closing response to an EER is by using the DRWEB website and technical dialogs to interested activities. In addition a Naval message is automatically generated for units with no Internet access.

4.6.6 Joint Deficiency Reporting System. Joint Deficiency Reporting System (JDRS) provides a common, seamless solution for deficiency reporting and resolution management across the Aeronautical Enterprise. JDRS is a cross-service web enabled automated tracking system designed to initiate, process and track deficiency reports from the Warfighter through the investigation process.

JDRS was developed by NAVAIRs NAMDRP/JDRS development team located at NAS Patuxent River comprised of senior programmers, functional requirement experts, application testers, and

various program support personnel. Working along side the JDRS development team are JDRS support teams from the Navy, Marines, Army, Air Force, Coast Guard and the Defense Contract Management Agency (DCMA). For more information on JDRS visit www.jdrs.mil.

4.6.6.1 EI Reporting Program. The EI program performs the following functions:

a. Provides an investigation process to determine the cause and depth of Fleet reported material failures.

b. Supports the investigation of material associated with ordnance mishaps, lightning strikes, electromagnetic interference, and stray voltage problems.

c. Provides engineering assistance relating to any ordnance problem.

d. Supports the mandatory investigation requirements prescribed by OPNAVINST 3750.6 series for activated aircraft escape systems.

4.6.6.2 COMNAVAIRFORINST 4790.2 series delineates procedures for submission of EIs and HMRs via the JDRS web site: www.jdrs.mil.

a. EI reporting applies to all aircraft system, targets, subsystems, equipment, components, related non-weapons support equipment, special tools, fluid or materials, and test program tests used in the equipment operation.

NOTE

EIs on ordnance items are determined by the FST only.

b. The FST, or cognizant action point, is required to respond to all deficiency reports. When a reply has not been received the originating activity shall initiate follow-up action to the FST or screening point using the JDRS website if Internet access is unavailable, the reply will be sent by Naval message.

4.6.7 Reporting Responsibilities.

4.6.7.1 Fleet Support Team. The FST is required to provide a response to all deficiency reports. If the cognizant FST engineer determines that an exhibit is required, and if the exhibit is available, the FST shall provide shipping instructions for the discrepant equipment/material, or make arrangements for an on site investigation. All exhibits will be shipped as directed by the shipping instructions received from the FST. If cognizant FST engineer determines that the deficiency report requires no further action, they shall provide a summary of the factors that lead to this decision. When a reply has not been received within 20 days, the originating activity will initiate follow-up action to the FST.

NOTE

All CAD/PAD EI exhibits shipped within CONUS shall be shipped by the overnight conveyance (PRI 03-999) unless otherwise directed by the FST, to expedite investigation when required. OCONUS shipment of CAD/PAD EI exhibits will normally be by air authorized (TP-1 cargo, PRI-03-999). On all investigative sample returns, weapons/ordnance departments shall report the method of shipment, tracking number, and deficiency report number to IHDIV, NSWC in DRWEB by message to NAVSURFWARCENDIV INDIAN HEAD MD//530/510//.

4.6.7.2 APML. The APML is responsible for appointing the FST.

4.6.7.3 Depot Level Maintenance. Quality Assurance (QA) is responsible for the administration of TPDRs, EIs, HMRs, PQDRs, CODRs, EMRs, and EERs. CODRs are not required when deficiencies are discovered during weapons testing at activities that perform maintenance on air-launched missiles, e.g. Naval weapons stations, ordnance assessment activities, and Naval airborne weapons maintenance units. Results of testing and deficiencies are entered into the maintenance data system in accordance with this manual.

4.6.7.4 Customers of new or newly reworked material. QA personnel are responsible for originating a PQDR on discovery of any deficiency. The deficiency will be reported to the originating point on a PQDR and forwarded to the appropriate screening point.

4.6.7.5 Fleet Support Team Responsibility. The FST is responsible for the following:

a. Management and processing of deficiency reports/mishap reports for cognizant weapons systems and armament systems received from the originating point. Figure 4-6-6 identifies the respective FSTs, and Figure 4-6-7 breaks down the time frame for each action point.

b. The FST reviews all deficiency reports for EI applicability, and if required, will initiate an EI in accordance with COMNAVAIRFORINST 4790.2 series.

c. Review all deficiency reports for accuracy and completeness.

d. Initiate follow-up action as soon as the action becomes overdue.

4.6.7.6 Organizational and Intermediate Level Activities. The Weapons/Ordnance Officer is responsible for the administration of PQDRs, CODRs, EMRs, and EERs as they relate to weapons/munitions. In the absence of a Weapons/Ordnance Officer the cognizance Division Officer is responsible. Targets will submit EIs for non-explosive items through the link provided on the JDRS website. When the JDRS website is not accessible, submit EIs in accordance with the COMNAVAIRFORINST 4790.2 series.

4.6.7.7 Support Point. The support point performs the following functions:

a. Assists, when requested by the action point, under the established time frames specified in this manual.

b. Furnishes a report of findings as requested by the action point.

c. Provides an information copy of PQDRs and subsequent correspondence to COMNAVAIR-SYSCOM, and the Fleet Readiness Center for organic and commercially reworked material and related components.

d. Receives deficiency reports from across component lines (source of supply action point) for appropriate action.

e. Returns or provides for the return of the equipment or material to the Navy supply system under the master repairable item list after completing the investigation unless otherwise directed or unless the material or equipment is beyond salvage.

ORIGINATOR	FST	SUPPORT POINT
1. Discover defects. Initiate PQDR. 2. Submit PQDR via AWIS DRWEB website at https://awis. navair.navy.mil. Report shall be submitted within 24 hours as operational tempo allows not to exceed 72 hours. 3. Certify validity, completeness, and accuracy of report. 4. Assigns RCN. 5. Finalizes report. 6. Provides copy of report to installation supply support activity for stock ID and provide holding instructions in case of exhibit investigation. 7. Receive FST replies.	1. Acknowledge receipt. a. Cat I - 24 hrs b. Cat II - 10 days 2. Determine if warranty applies take appropriate action. 3. Determine if credit applies take appropriate action. 4. Alert field/storage of suspect material(s). 5. Suspend/screen stock. a. Cat I - 24 hrs b. Cat II - 20 days 6. Determine cause (contractor/Government) and responsible support point. 7. When FST conducts independent investigation, provide interim or final reply after receipt of requested exhibit. a. Cat I - 20 days w/o exhibit or 20 days after receipt of requested exhibit. b. Cat II - 30 days w/o exhibit or 30 days after receipt of requested exhibit. 8. Forward PQDR to support Point. a. Cat I - 24 hrs b. Cat II - 10 days 9. Forward replies from support point. a. Cat I - 72 hours b. Cat II - 10 days	1. Acknowledge receipt. 2. Conduct investigation. 3. Provide final/interim responses after receipt of requested exhibit. a. Cat I - 20 days w/o exhibit or 20 days after receipt of requested exhibit. b. Cat II - 30 days w/o exhibit or 30 days after receipt of requested exhibit. 4. Prepare DLA Form 1227 and forward same to FST.

Figure 4-6-7. Processing of Reports (PQDR)

TYPE OF REPORT	ORIGINATOR	FST
CODR	1. Discover defect. 2. Submit CODR using AWIS DRWEB website https://awis.navair.navy.mil. 3. Forward report to FST. Report shall be submitted within 24 hours as operational tempo allows not to exceed 72 hours screening point.	1. If EI is applicable, initiate EI. 2. Provide final/supplemental report to originating point. a. Critical - 24 hours b. Routine - 5 days
EMR	1. Submit EMR after mishap using Safety Center website at: http://safetycenter.navy.mil 2. Forward report to FST. Report shall be submitted within 24 hours as operational tempo allows not to exceed 72 hours.	1. If EI is applicable initiate EI. 2. Provide final/supplemental report to originating point. a. Critical- 24 hours b. Routine - 72 hours
EER	1. Submit EER after mishap using AWIS DRWEB website at https://awis.navair.navy.mil. 2. Forward report to FST. Report shall be submitted within 24 hours as operational tempo allows not to exceed 72 hours.	1. If EI is applicable initiate EI. 2. Provide final/supplemental report to originating point. a. Critical- 24 hours b. Routine - 72 hours
EI (TARGETS ONLY)	1. Discover defect 2. Submit EI Request using JDRS website www.jdrs.mil. 3. Forward report to FST. Report shall be submitted within 24 hours as operational tempo allows not to exceed 72 hours	1. Provide final/supplemental report to originating point. a. Critical - 24 hours b. Routine - 5 days 2. Alert field/storage of suspect material. 3. Suspend/screen stock. a. Critical - 24 hours b. Routine - 5 days 4. When action point conducts independent investigation, provide interim, or final reply after receipt of requested exhibit. a. Critical - 20 days w/o exhibit or 20 days after receipt of requested exhibit. b. Routine - 30 days w/o exhibit or 30 days after receipt of requested exhibit.

NOTES:

1. All times are calendar days/hours.
2. All times begin with receipt of report.
3. If exhibit is required for investigation, request exhibit from originator or holding activity within 7 days of receipt of report.
4. Submission of an OPREP-3 Report or OPNAVINST 3750.6 series-generated report does not relieve the reporting command from the requirement for submitting an EMR or CODR.
5. Do not submit EI requests on ordnance items or explosives.

Figure 4-6-7. Processing of Reports (CODR, EMR, EER and EI) - contd.

The equipment or material may be inducted for rework if the item is extensively disassembled and salvageable. In the case of mishap investigations, the senior members of the mishap board or the assigned Naval Safety Center investigator have proprietary interest in equipment or material being investigated. No disposition shall be made until released under OPNAVINST 3750.6 series.

4.6.8 Report Numbering. A RCN will be obtained from QA and assigned to each weapon deficiency report. RCNs will be assigned sequentially throughout the calendar year without regard for the type of report. For example, “0001” may be the first report and is a CODR; “0002” may be the second report and is a CAT I PQDR; “0003” may be the third report and is a TPDR; and “0004” may be the fourth report and is a CODR. The report control number is composed of the following 12 elements:

a. Element (1) is the service designator code (N, V, or R) of the originating activity. N is for Navy and Marine Corps aviation non-deploying units, V is for Navy and Marine Corps Aviation Atlantic Fleet operating forces, and R is for Navy and Marine Corps Pacific Fleet operating forces.

b. Elements (2) through (6) are the Unit Identification Code (UIC) of the originating activity. For example, “54056,” followed by a dash (-).

c. Elements (7) and (8) are a two character identification of the calendar year, for example, 2005 would be written as “05” followed by a dash (-).

d. Elements (9) through (12) are the locally assigned control number. These numbers are sequential beginning with 0001 each calendar year.

CHAPTER 4.7

Technical Data

Table of Contents

Paragraph	Subject	Page
4.7.1	General	4-7-1
4.7.2	Technical Manuals	4-7-1
4.7.3	Technical Directives	4-7-1
4.7.4	Engineering Drawings	4-7-2
4.7.5	Integrated Logistics Support Plans	4-7-2
4.7.6	Operational Logistics Support Plans	4-7-2
4.7.7	Technical Data Management and Distribution Responsibilities	4-7-2
4.7.8	Procedures for Reporting Technical Manual Deficiencies	4-7-3
4.7.9	Industrial Standards Program	4-7-3

CHAPTER 4.7

Technical Data

4.7.1 General. General. Technical data are recorded information used to define a design and to produce, support, maintain, or operate items of defense material. The data may be recorded in written or picture form. When recorded, technical data becomes technical documentation. The methods used to record data for technical documentation are CD Rom, computers, publications, printouts, tapes, and manuals. Technical data is presented in varied forms. Data available to Fleet and weapons maintenance activities fall into four categories: technical manuals, technical directives, engineering drawings, and logistics documentation.

4.7.2 Technical Manuals. The technical manual is the primary tool that joins all elements of logistic support necessary for the operation and maintenance of weapons. Technological advancements in weapons, especially missiles, have changed the approach to writing technical manuals. The specific missile maintenance actions require that the maintenance technician has the technical information readily available to him/her. To make the manual more user oriented, the COMNAVAIRSYSCOM has directed that weapons technical manuals be work package formatted. The work package manual is considered an improvement over the conventionally formatted technical manuals for three reasons. They are:

a. Organization. Each work package manual is composed of separate work packages, compiled according to functional tasks, e.g., disassembly, test, assembly, etc.

b. Comprehensibility. The comprehensibility assurance criteria was developed for the work package manual by making it easier for the reader to understand.

c. Forms. Work package technical manuals include forms presenting applicable checklists, inspection lists, and maintenance requirements lists for each work package. To support the work package format policy, COMNAVAIRSYSCOM has instituted a management program that ensures technical manual in-process reviews, validation, and verification. Weapons technical manual updates are accomplished by revisions, changes, rapid action changes, and interim manual change releases.

4.7.3 Technical Directives. The Technical Directive System (TDS) is the authorized medium for directing the accomplishment and recording of modifications and one-time inspections of COMNAVAIRSYSCOM accepted weapons, support equipment and other associated equipment. “Technical Directive” is a collective term which includes four types of technical issuances. They are:

a. Change. A change directs the accomplishment and recording of a configuration change, that is, material change, a repositioning, a modification, or an alteration in the characteristics of the manual section or component.

b. Interim Change. Urgency sometimes dictates dissemination of a Technical Directive (TD) by message. The messages are designated an interim change. Interim changes do not replace the requirement for a formal change.

c. Bulletin. A bulletin directs a one-time inspection to determine whether a given condition exists and specifies what action is to be taken if the condition is found.

d. Rapid Action Minor Engineering Change (RAMEC). A RAMEC TD directs the accomplishment and recording of a configuration change within the limitations of the Rapid Action Minor Change Program in accordance with NAVAIR 00-25-300.

4.7.4 Engineering Drawings. Engineering drawings and associated data are developed as directed by COMNAVAIRSYSCOM. They are procured and issued to support the detailed maintenance and repair of missiles and support equipment. The primary purposes of engineering drawings are for procurement and to provide for Depot level maintenance.

4.7.5 Integrated Logistics Support Plans. Integrated Logistics Support Plans (ILSP) contain a composite of all support planning along with the considerations necessary to assure the effective and economical support of systems and equipment for their life cycle. The ILSP is used as a tool to acquire logistic support for a specific system or equipment.

4.7.6 Operational Logistics Support Plans. Operational Logistics Support Plans contain information and guidance for using and supporting activities to establish the logistic support of a system or equipment prior to the introduction to the Fleet

4.7.7 Technical Data Management and Distribution Responsibilities.

4.7.7.1 It is COMNAVAIRSYSCOM policy that all systems or equipment procured, developed, or intended for use by COMNAVAIRSYSCOM will include contractual requirements for accurate, comprehensible, and usable technical manuals suited to the intended user and matched to their environment and related integrated logistic support function. The policy provides for preparation of technical manuals which follow the approved maintenance plan and provisioning documentation for the end item covered.

4.7.7.2 The FST is the Naval activity having prime engineering cognizance over the weapons system or equipment for which a technical manual is being prepared. Technical manual assignments are made in accordance with engineering FST assignments. As members of the technical manual management team and the integrated logistics support management team, the FST is active in defining requirements in the technical manual contract and participates in the guidance review, quality planning review, quality program review, in-process and adequacy review, verification, and verification follow-up reviews. They also develop and update manuals for out-of-production systems and screen all reported technical manual deficiencies and assign corrective action. (See Chapter 4.6 for QDR procedures.)

4.7.7.3 The Naval Air Technical Data and Engineering Services Command (NAVAIRTECHDATAENGSERVCOM) is a COMNAVAIRSYSCOM activity responsible for implementing policy, managing, and coordinating the technical manual program. In the case of Joint Direct Attack Munition (JDAM), under acquisition reform, NAVAIRTECHDATAENGSERVCOM is responsible for procurement, distribution, and update of technical manuals. Primary management responsibilities include conducting product and procedure reviews, such as quality program reviews, in-process reviews, adequacy reviews, commercial manual reviews, and verification. NAVAIRTECHDATAENGSERVCOM ensures the management of all phases of technical documentation, including review and approval of contractor recommended selections and plans, specification

interpretations and recommended deviations, and the implementation of the quality assurance functions as defined in the Technical Manual Quality Assurance Program Guide. In the case of JDAM, under acquisition reform, NAVAIRTECHDATAENGSERVCOM will not be responsible for procurement, distribution, or update of technical manuals. This responsibility will be the prime contractor or Joint Program Office (JPO) at Eglin Air Force Base.

4.7.7.4 The Naval Air Warfare Center Weapons Division (NAVAIRWARCENWPNDIV), China Lake is the central repository for weapons engineering drawings. The Naval Air Warfare Center Aircraft Division, Indianapolis, is the central repository for chaff countermeasures and active expendable decoys engineering drawings. The Naval Surface Warfare Center Division, Crane, is the central repository for infrared decoy flare engineering drawings.

4.7.8 Procedures for Reporting Technical Manual Deficiencies. Technical manual deficiencies are reported through the TPDR Program, which is discussed in Chapter 4.6.

4.7.9 Industrial Standards Program. The Industrial Standards Program has been established within COMNAVAIRSYSCOM to manage the development, monitoring, and update of labor, material, and facility standards required to ensure that maintenance production operations provide effective maintenance support at the least cost. The Industrial Standards Program includes the following elements:

a. Industrial Processing Guide and Fixed Price Matrix (FPM) development and update.

b. Industrial Processing Standards Monitoring and Analysis. On a continuing basis, the NAVAIRWARCENWPNDIV, analyzes NWS production results for compliance.

c. Logistics Review. Chapter 4.2 provides information on integrated logistics support and logistics support analysis.

d. HMCM Program. This program is administered by NAVAIRWARCENWPNDIV and implements OPNAVINST 5090.1 series as it relates to the maintenance of weapons and associated equipment. Technical Manual NAVAIR 01-1A-75 is the primary controlling document. This manual contains instructions and requirements necessary for the determination and effective use of corrosion control/prevention materials and procedures, as well as all other hazardous materials. To minimize the variety and quantity of hazardous materials required in the maintenance of assigned commodities, the processes and materials specified in NAVAIR 01-1A-75 take precedence over those in commodity unique manuals. The materials authorized in NAVAIR 01-1A-75 constitute the hazardous material Authorized Use List for maintenance of applicable systems. Adherence to the materials in the Authorized Use List will:

(1) Preclude procurement and use of ozone depleting substances.

(2) Preclude procurement and use of materials that are not in compliance with environmental regulations.

(3) Reduce procurement and use of extremely hazardous and carcinogenic materials.

(4) Reduce the variety and quantity of hazardous materials procured, stored, and disposed of in any one weapons maintenance area.

e. NAVAIR 01-1A-75 is intended to be used during maintenance of all commodities except targets QF-4N and QF-4S. As commodity maintenance manuals are reviewed for compliance,

they are listed in NAVAIR 01-1A-75. Using hazardous materials and procedures from a maintenance manual that is not listed in NAVAIR 01-1A-75 puts the maintenance activity and the maintenance personnel at a much greater risk of violating environmental regulations.

f. Consumable Materials Standardization Program. The standardization of consumable materials used to maintain conventional weapons, air launched missiles, containers and launchers is established policy. The objectives of this standardization program are to reduce the number of consumable materials required by maintenance activities and to reduce the unnecessary procurement and stocking of proprietary items and potentially hazardous/toxic materials. The implementing document is NAVAIR 01-1A-75. Although use of the non-hazardous materials listed in NAVAIR 01-1A-75 is not mandated, adherence to those materials will reduce the variety and quantity of materials procured and stored in any weapons maintenance area.

g. Depot Rework Specification Implementation. End items undergoing depot repair are standardized and depot rework specifications are prepared.

h. Consolidated Facilities Management Planning Document for Missiles and Containers. This document contains facility development standards, maintenance and testing facility production analysis, and an overview of existing future weapons and container maintenance facilities.

SECTION 5

Management Information Systems

Table of Contents

Chapter	Subject	Page
5.1	All Weapons Information System	5-1-1
5.2	Optimized Performance Model	5-2-1
5.3	Airborne Weapons Analysis and Reporting System	5-3-1
5.4	Aircraft Armament Equipment	5-4-1
5.5	Automated Captive Carry Entry System	5-5-1
5.6	Air Launched Weapons Support Team	5-6-1
5.7	Core Data Management System	5-7-1
5.8	Engineering Management System	5-8-1
5.9	Firing Reporting System	5-9-1
5.10	Gun Inventory Tracking and Reporting System	5-10-1
5.11	Logbook Data Entry System	5-11-1
5.12	Notice of Ammunition Reclassification/Ammunition Information Notice Reporting System	5-12-1
5.13	Targets Performance Reporting Systems	5-13-1
5.14	Configuration and Data Management Support System	5-14-1
5.15	Technical Directives	5-15-1
5.16	Common Munitions Built-In-Test Reprogramming Equipment	5-16-1
5.17	Fleet Weapons Support Team	5-17-1
5.18	Global Naval Message	5-18-1
5.19	Mine Allowance Database	5-19-1

Table of Contents - contd.

Chapter	Subject	Page
5.20	Non Combat Expenditure Allowance	5-20-1
5.21	New Production Deliveries	5-21-1
5.22	Ordnance Load Out Planning Module	5-22-1

CHAPTER 5.1

All Weapons Information System

Table of Contents

Paragraph	Subject	Page
5.1.1	General	5-1-1
5.1.2	Purpose and Scope	5-1-1
5.1.3	All Weapons Information System Structure	5-1-3
5.1.4	Responsibilities	5-1-6
5.1.5	Functionality	5-1-8
5.1.6	Interfacing Systems	5-1-8

List of Illustrations

Figure	Title	Page
5-1-1	Up-line Information Systems Functional Organization	5-1-2
5-1-2	All Weapons Information System Architecture	5-1-4

CHAPTER 5.1

All Weapons Information System

5.1.1 General. The All Weapons Information System (AWIS) is the Naval Air Systems Command (NAVAIR) Information Technology (IT) system providing complete life cycle tracking for many NAVAIR ordnance systems. AWIS exists to support weapon systems management. The system provides comprehensive and timely information for the development, production, maintenance, follow-on engineering, acquisition and logistics to support Fleet readiness and help sustain sophisticated weapons systems and associated support equipment. AWIS is chartered as the centralized database for NAVAIR ordnance data and is currently comprised of numerous interrelated applications.

5.1.1.1 All Weapons Information System. AWIS supports the maintenance management of weapons and their support equipment. AWIS supports the basic maintenance doctrine for weapons and support equipment as prescribed by the Naval Ordnance Management Policy (NOMP). It will maximize the utilization and management of required information resources of existing and planned capabilities of the various weapons information systems. It will do this by consolidating these systems into the AWIS Portal.

5.1.1.2 AWIS Management Structure. The AWIS program was established by the Commander, Naval Air Systems Command (COMNAVAIRSYSCOM) and is sponsored by Chief of Naval Operations (CNO) (N411). COMNAVAIRSYSCOM Information Systems Branch is responsible for identifying and managing interfaces between the major aviation logistics information system. Functional management relationships for the development of AWIS are displayed in Figure 5-1-1. Detailed procedures governing action of the AWIS configuration control board are contained in the AWIS Configuration Control Board Document AWIS-OR-CCB-001.

5.1.1.3 Goal. The AWIS goal includes the optimization and integration of existing weapons information systems into a single information system capable of responding to the weapon manager's needs for weapon life cycle management. AWIS uses the Navy and Marine Corps Intranet (NMCI) as the communication network. AWIS links individual data and information systems located at field activities with defined procedures provides access to data and information products that are stored and maintained at those activities.

5.1.2 Purpose and Scope.

5.1.2.1 Purpose. The purpose of this section is to describe AWIS. This section provides guidance and instructions for the activities involved in weapon systems life cycle management. Finally, it presents an overview of the information systems that will network with AWIS to provide required maintenance management data.

5.1.2.2 Scope. AWIS has successfully created an AWIS portal with central log-in site access and integrating several standalone databases into AWIS. This section references the location in the NOMP where each of these applications are discussed:

a. Chapter 5.1 introduces AWIS.

b. Chapter 5.2 contains information regarding the Optimized Performance Model (OPOM).

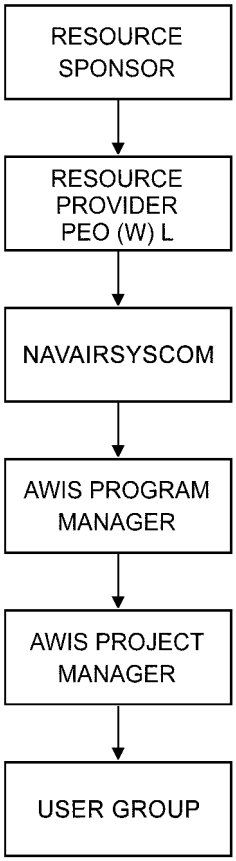

Figure 5-1-1. Up-line Information Systems Functional Organization

c. Chapter 5.3 describes the All Weapons Analysis and Reporting System (AWARS).

d. Chapter 5.4 contains information on the Aircraft Armament Equipment (AAE) application.

e. Chapter 5.5 describes the Automated Captive Carry Entry System (ACES).

f. Chapter 5.6 describes the Air Launched Weapons Support Team (ALWT) module.

g. Chapter 5.7 describes the Core Data Management System (CDMS).

h. Chapter 5.8 describes the Engineering Management System (EMS).

i. Chapter 5.9 describes the Firing Reporting System (FRS).

j. Chapter 5.10 describes Guns Inventory Tracking and Reporting (GITR) System.

k. Chapter 5.11 describes Logbooks Data Entry System.

l. Chapter 5.12 describes the Notice of Ammunition Reclassification (NAR)/Ammunition Information Notice (AIN) Reporting System.

m. Chapter 5.13 contains information regarding Targets Inventory and Performance Reporting System.

n. Chapter 5.14 describes the Configuration and Data Management Support System (CADMSS).

o. Chapter 5.15 describes the Technical Directive (TD) module.

p. Chapter 5.16 describes the Common Munitions Built-In-Test Reprogramming Equipment (CMBRE) module.

q. Chapter 5.17 describes the Fleet Weapons Support Team (FWST) module.

r. Chapter 5.18 describes the Global Naval Message (GNM) module.

s. Chapter 5.19 describes the Mine Allowance Database (MAD) module.

t. Chapter 5.20 describes the Non Combat Expenditure Allocations (NCEA) module.

u. Chapter 5.21 describes the Item New Production Deliveries System (NPDS) module.

v. Chapter 5.22 describes the Ordnance Load Out Planning Module (OLOM) module.

NOTE

Volume I, Chapter 4.6, describes the Deficiency Reporting Website (DRWEB).

5.1.3 All Weapons Information System Structure. Figure 5-1-2 illustrates the structure of the AWIS. The resource sponsors for AWIS are within the office of the CNO. The Naval Air Warfare Center Weapons Division, China Lake is designated as both the Project Manager (PM) and central design activity for AWIS. The functional components of AWIS consolidate the following information systems:

a. The OPOM allows managers and planners to develop requirements and resource allocations for Weapon System Support (WSS), Ordnance Assessment (OA), and Maintenance activities funded by Operations and Maintenance, Navy (O&M,N). The application also provides the capability to assess alternate options in response to budget, resource, capability or readiness objective changes.

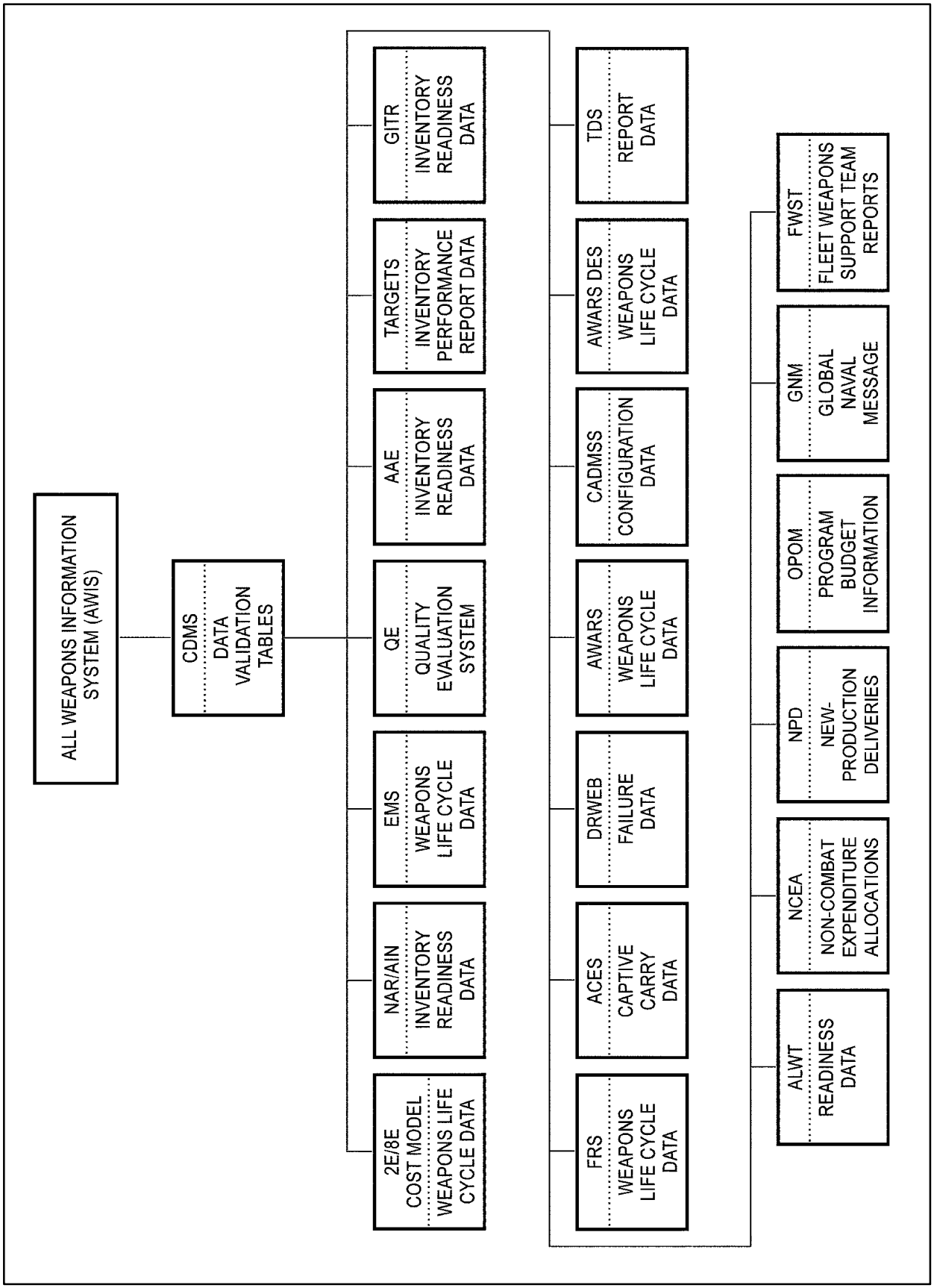

Figure 5-1-2. All Weapons Information System Architecture

b. The AWARS provides for the collection, processing, analysis, reporting, and modeling of performance, maintenance, logistics, and acquisition data.

c. AAE replaced the old paper system with a real time inventory system. Status of all assets is tracked so that operational availability is always known. AAE also tracks any transfers and the status of availability.

d. ACES is a web application used to capture and pass airborne weapons captive carry flight data to AWARS.

e. The ALWT module provides the capability to generate charts and graphs.

f. CDMS is an unclassified web application that provides a structured interface for viewing and maintaining data elements contained within the central repository. Data elements include descriptive data, and other elements reconciled from the Ordnance Information System (OIS) and Federal Logistics Information System (FLIS) databases.

g. EMS is a web application that gives the Naval community a consistent way to manage and track surveillance and other engineering test projects. The system allows users to create test projects, search for historical reports of complete projects, distribute finalized test reports and generate management reports.

h. The FRS is used by the Fleet to report the unclassified results of non-combat missile firings and unsuccessful combat missile firings for designated programs in accordance with Volume I, Section 3.2.

i. GITR module is a web application that provide the weapons community an automated way to track the location, quantity, and material condition of the GITR inventory. This tool also provides real-time readiness reports.

j. AWARS Data Entry System is a web based application that provides a method of capturing maintenance information, operations and tests performed, TDs applied, and links to configuration data tracked via Configuration Summary Form (CSF) in the AWARS system. These CSF sheets are printed out and accompany the missile when transferred.

k. The NAR/AIN Reporting System module has a searchable archive of issued NAR/AIN. AWIS is not the authoritative data source for NARS data. The data in AWIS is at least 24 hours old. To get the latest NARS data, please visit the OIS website at https://www.ois.disa.mil.

l. The Targets inventory data entry system provides a method of capturing real time inventory and performance tracking of target assets by location Fleet wide. Inventory tracking and summarization is available by location showing quantities and material readiness condition. Performance tracking captures target performance, TA/AS performance, shooter information, and includes reporting weather conditions affecting target operations. The Target Performance Report (TPR) provides an ADHOC query and fixed reports for both inventory and performance data.

m. The CADMSS was conceptually approved by the Chief of Naval Material in May 1977, and provides an information system used for managing engineering documentation, configuration baselines and for maintaining a history of engineering changes and contract data deliverables.

n. Technical Directive System (TDS) allows users to track compliance of technical directives by interacting with other AWIS systems, TDS provides real-time reports of compliance by part inventory levels, serialized items, and Personal Computer Memory Card International Association (PCMCIA) cards. The system also enables the initiation, verification, review and approval of new Technical Directives utilizing the item information and data relationships in the AWIS core database.

o. DRWEB. The database is utilized for failure, repair, and trend analysis on hardware problems performance deficiencies, and corrective actions throughout the life cycle of the weapons.

p. CMBRE allows the upload of CMBRE files.

q. The FWST data entry and reporting application allows Fleet support and field manager users to accurately and uniformly enter all data required to calculate and generate reports demonstrating Return on Investment (ROI) and Fleet savings that are a direct result of FWST implementation.

r. GNM module provides the capability to create generic Naval messages.

s. The Item Unique Identification (IUID) application will allow user to create a data matrix barcode for items and register the item in the IUID registry.

t. The purpose of the Mine Allowance Database (MAD) is to allow Mobile Mine Assembly Units (MOMAUs) to determine their mine material and support equipment allowances based on the Non-Nuclear Ordnance Requirement (NNOR) for service assets and the NCEA for Exercise & Training (E&T) assets.

u. NCEA provides the ability to store NCEA project information in a centralized location via their web browsers. The TTR which is a compilation of project data is then submitted automatically to NAVSUP GLS AMMO via email and the resulting Strawman file is loaded into NCEA for allocation of assets provided by OPNAV. It also supplies maintenance models with NCEA data.

v. The New Production Deliveries System provides APMLs the ability to store new production delivery data in a centralized location via their web browsers. NPDS accepts input of new production delivery data as it relates to NALC/DODICS per contract and supplies maintenance models with new production delivery data.

w. OLOM is a program office tool for predicting carrier loadout capability based on current Retail Ordnance Logistics Management System (ROLMS) inventory and projected new production.

5.1.4 Responsibilities. Each organization within the flow chart listed in Figure 5-1-1 has responsibilities. These responsibilities are outlined below:

5.1.4.1 Resource Sponsor. Coordinates funding requirements that are within identified weapons system appropriations.

5.1.4.2 Resource Provider. PEO (U&W) L provides funding for the core programs including AWIS.

5.1.4.3 COMNAVAIRSYSCOM. The command is broken down into several departments. The Logistics Support department is one of these departments. Within the Logistics Support department is the Information System division.

5.1.4.4 Program Manager. Ensures that AWIS architecture, standards, and procedures are consistent with parent systems, COMNAVAIRSYSCOM up-line information system requirements and that full compatibility is achieved with required external interfaces.

5.1.4.5 Project Manager. The project manager is responsible for:

a. Program execution in both management and technical areas.

b. Planning, coordination, review, and reporting of AWIS design, development, and operation activities.

c. Resource tracking for the resource sponsor, resource provider, and manager for AWIS.

d. Adherence to prescribed standards and requirements.

5.1.4.6 Central Design Activity. The central design activity is responsible for:

a. Design, development, implementation, maintenance, and life cycle support of application software.

b. Identification of new information system requirements and developing information system technical design.

c. Assisting in functional design, planning, and participating in technical/functional reviews.

d. Preparation of functional and technical documentation for all application software.

e. User support.

5.1.4.7 Sponsoring COMNAVAIRSYSCOM Divisions. Provide specific tasking to identify and develop individual member data system requirements and capabilities as well as tasking to support AWIS development, coordination, and operation. Divisions perform executive review to ensure that weapons system requirements are being adequately addressed by AWIS within appropriate field activity mission areas. In addition, divisions maintain the accuracy of the data in AWIS.

5.1.4.7.1 AWIS site managers located at COMNAVAIRSYSCOM divisions will adhere to guidelines in SECNAVINST 5000.2 series, Life Cycle Management Policy and Approval Requirements for Information System Projects.

5.1.4.8 User Groups. AWIS user groups are located at COMNAVAIRSYSCOM, field activities (government and commercial), and Naval Sea Systems Command sites supporting weapons. The AWIS user group members provide review and approval of system attributes such as content, processing standards, common procedures, system data quality requirements, and other characteristics all consistent with Department of Defense (DOD), and Navy requirements for automated data processing systems. The AWIS users group is the primary controlling body through which AWIS users determine critical system attributes, such as content requirements, processing standards, common procedures, data quality and system quality.

5.1.5 Functionality. AWIS supports all aspects of a weapons systems life cycle. Functions in the life cycle that are managed through AWIS are as follows:

a. Support of acquisition, production support, and integrated logistics support.

b. Assessments of in-service weapons includes:

(1) Ordnance assessments of the laboratory test program.

(2) RMA&Q - Reliability, Maintainability, Availability, and Quality (RMA&Q) analysis and reporting program.

(3) Rework assessment test program.

(4) Warranty analysis and reporting program.

(5) Flight performance and evaluation program.

5.1.6 Interfacing Systems. There are a number of systems that interface with AWIS in support of weapons logistics and maintenance. The following is a list of the most significant interfacing systems:

a. Naval Aviation Maintenance and Material Management (AV-3M) System. The AV-3M system is a subsystem of the Navy's 3M program. It provides the Navy, to the maximum extent possible, with a standardized set of procedures to simplify managing, recording, accumulating, storing, retrieving, analyzing, and reporting data concerning Fleet maintenance and its related material. For airborne weapons, this is primarily concerned with aircraft items, such as guns, launchers, and their related support equipment. AV-3M also provides procedures for training personnel in its operation and use. Standardization of forms, administrative paperwork, reports, and control documents have made planned maintenance and material management less time consuming and demanding at all echelons of Naval command from the CNO, down to Fleet organizational maintenance activities.

b. OIS. OIS is an automated Navy conventional ammunition inventory and control information system. OIS serves as the only inventory reporting system for conventional ammunition used by CNO. It is also the single point of reference within the Navy for the worldwide status and visibility of the Navy's conventional ammunition data, regardless of inventory management or ownership responsibility. In particular, the data includes requirements, assets, allowances, production and procurement, expenditures, financial, technical, renovation, foreign military sales program, budget, and Serialized Lot Item Tracking (SLIT) information. It provides the capability of tracking individual units by serial number or aggregate units by lot designation using the SLIT subsystem. It is important to note that OIS is for conventional ammunition.

c. Defense Standard Ammunition Computer System (DSACS). DSACS is a joint services automated data system for conventional ammunition. It will functionally operate to support the single manager for conventional ammunition and the military services in the acquisition, logistics, finance, and management of assigned items of conventional ammunition. The Army is leading the development effort of DSACS.

d. Joint Engineering Data Management Information and Control System (JEDMICS). JEDMICS is a Department of Defense system that is designed to fulfill the requirements of the

tri-services for the automation of engineering drawing data for storage and retrieval at engineering data repositories. JEDMICS replaces the manual and semi-automated storage of physical representations of technical data (hardcopy drawings and aperture cards) with storage of digital versions of the data with fully automated retrieval, update, and reproduction in a digital environment.

e. Naval Aviation Logistics Command Management Information System (NALCOMIS). NALCOMIS provides the Fleet ship and shore organizational maintenance activity, intermediate maintenance activity, and supply support center activities with a modern, real time, responsive, computer-based management information system. It assists managers in planning and executing their assigned functions in a more efficient and expeditious manner. It assists maintenance and supply management by furnishing current and accurate information needed for decision making. For airborne weapons, NALCOMIS is primarily concerned with installed aircraft items such as guns, launchers, and their related support equipment. Its four primary objectives have major impacts on the mission capability of aircraft and their installed airborne weapons. They also have major impacts on overall personnel effectiveness at the organization and intermediate maintenance levels and the supply support center in support of the Naval Aviation Maintenance Program (NAMP).

f. NALCOMIS. NALCOMIS provides the Fleet ship and shore organizational maintenance activity, intermediate maintenance activity, and supply support center activities with a modern, real time, responsive, computer-based management information system. It assists managers in planning and executing their assigned functions in a more efficient and expeditious manner. It assists maintenance and supply management by furnishing current and accurate information needed for decision making. For airborne weapons, NALCOMIS is primarily concerned with installed aircraft items such as guns, launchers, and their related support equipment. Its four primary objectives have major impacts on the mission capability of aircraft and their installed airborne weapons. They also have major impacts on overall personnel effectiveness at the organization and intermediate maintenance levels and the supply support center in support of the NAMP.

g. Naval Ordnance Management Information System (NOMIS) and Integrated Logistics Support Management Information System (ILSMIS). NOMIS is designed for the automated stock recording and reporting of ammunition stores at Naval Sea Systems Command (NAVSEASYSCOM) activities. The near term ILSMIS functional operations are basically those performed by supply department personnel. It provides enhancements to existing NOMIS that can be accomplished rapidly and economically, allowing temporary solutions to top priority material processing problems of the Navy ordnance activities. Its objective is to provide accurate, timely, and comprehensive reporting of assets and a document and material tracking status through a system that is integrated with NOMIS and other local program management systems.

h. Retail Ordnance Logistics Management System (ROLMS). ROLMS is an ordnance inventory and management system designed for use by all Navy shore and afloat activities.

(1) ROLMS is designed and centrally managed by Naval Surface Warfare Center, Crane to provide a multi-level automation tool to be used by any retail ordnance stock-point or user activity/unit. Due to the system being designed for an “open systems environment,” the computer hardware is no longer centrally managed. The system is tailored to best support each individ-

ual command's needs by loading only the modules and sub-modules that will be used. This flexibility improves the support to the Fleet and reduces system maintenance cost. As the individual command missions change, the system can change with it by adding or deleting modules as required. ROLMS stand-alone operates on a PC, with the ROLMS Client/Server version providing client/server networking capabilities for multi-user access to the database. The same software is available to all users, regardless of the equipment operating environment.

(2) ROLMS users are able to customize the system to best fit their activity needs. Standardized software for all configurations allow for selectable functionally. An activity can choose modules when it is available and if their system has enough memory, disk space and processor speed. The ROLMS application software can include the following functionality:

(a) Requisitions/receipts.

(b) Changing problem number status.

(c) Asset maintenance.

(d) Reporting.

(e) Issues/expenditures.

(f) Physical inventory.

(g) Inquiries.

(h) Bar code processing.

(i) Space management.

(j) History.

(k) System maintenance.

(l) Excess/disposal.

(m) Load plan.

(n) Special reports.

(o) Restow.

(p) NARs.

(q) File maintenance.

(r) Automated tutorial.

(3) ROLMS generates transaction reports to OIS, the Marine Corps Ammunition and Accounting Report System (MAARS-II), and other Inventory Control Point (ICP) systems as required. Depending upon the type of site and reporting requirements, Ammunition Transaction Report (ATR) messages, Defense Automatic Addressing System (DAAS) requisition and status messages, or Transaction Item Reporting (TIR) transactions are provided to the appropriate ICP via the local communication center and/or DAAS.

(4) By utilizing the same software for all Navy ordnance users, ROLMS improves connectivity between systems and with OIS. This system also greatly reduces training requirements

for the Fleet by eliminating multiple training and by installing training software modules (automated tutorials) on the systems. In addition, Computer Based Training (CBT) applications are available on the ROLMS and NAVSUPSYSCOM websites for related topics such as the browser adhoc report generator and automated identification technology equipment and process.

i. Support Equipment Resources Management Information System (SERMIS). SERMIS is a part of the Aircraft Maintenance Material Readiness List (AMMRL) program promulgated by COMNAVAIRSYSCOM. SERMIS is the replacement for the application data for material readiness list files of the AMMRL program and M007 files of the support equipment rework program. It provides the Support Equipment Controlling Authorities (SECA) with on-line visibility of source, allowance, inventory, and rework data to aid in inventory control.

CHAPTER 5.2

Optimized Performance Model

Table of Contents

Paragraph	Subject	Page
5.2.1	General	5-2-1
5.2.2	Optimized Performance Model	5-2-1
5.2.3	Maintenance Module	5-2-2
5.2.4	Ordnance Assessment Planning Module	5-2-3

CHAPTER 5.2

Optimized Performance Model

5.2.1 General. OPOM is an OPNAV N41 sponsored Performance/Pricing Model (PPM). NAVAIR is the designated SYSCOM to manage this web-based model that documents a program's operations and sustainment requirements and determines funded/unfunded capabilities and associated readiness levels from execution year through the Future Years Defense Plan (FYDP).

5.2.1.1 OPOM is used by the Assistant Program Manager, Logistics (APML) to identify out-year requirements, the resource sponsor, and management personnel for program reviews, and assists in the completion of NNOR projected Inventory Worksheets. OPOM is comprised of several modules to effectively model the three major O&M,N components which are maintenance, Ordnance Assessment (OA) and WSS.

5.2.2 Optimized Performance Model. OPOM is a fully accredited model. It was developed to comply with an OPNAVINST 5200.35, directing Level of Effort (LOE) programs to use a PPM for requirements determination and program budget defense. All ordnance programs that are resourced by OPNAV N41 shall use OPOM to manage their assigned O&M,N funding. It is highly recommended that Program Offices/Resource Sponsors take advantage of the OPOM model and utilize it to manage other designated LOE resources. Programs complying with this manual are modeled accounts and are no longer considered LOE.

5.2.2.1 OPOM is web accessible on both NIPRNET and SIPRNET systems with servers located at Naval Air Warfare Center Weapons Division (NAWCWD) China Lake, CA. The program provides semi-annual maintenance workload, OA All-Up-Round (AUR) and component tests to be performed, and weapons system support through the FYDP. The model has the capability to provide current and projected readiness levels on the SIPRNET system for individual weapon systems as well as an aggregate readiness level when more than one program is run at the same time. OPOM is a part of AWIS and contains several integrated support modules. These are the maintenance and OA planning modules.

5.2.2.1.1 Responsibilities. The responsibilities for OPOM are as follows:

5.2.2.1.1.1 OPNAV N41 Resource Sponsor. The resource sponsor has OPOM model oversight and is responsible for utilizing the OPOM PPM in defense of all Naval ordnance O&M,N funded programs.

5.2.2.1.1.2 Lead Assistant Program Managers for Logistics (LAPML)/PM/Integrated Product Team (IPT) Lead. Responsible for maintenance support through maintenance engineering and the integration/coordination of logistic support elements. In this role the manager within each program office is responsible for the following:

a. Validate program requirements.

b. Ensure compliance with published business rules.

c. Conduct comparative analysis between programs (LAPML only).

d. Conduct "what if" runs for single or multiple programs. (LAPML only).

e. Approve Program Objectives Memorandum (POM)/budget.

5.2.2.1.1.3 APMLs and weapon system maintenance planners. Responsible for budgeting, planning, and executing maintenance WSS and OA actions and for all aspects of logistics for one or more programs. In this role, the manager is responsible for:

a. Development, defense and risk assessment of program budget requirements.

b. Validation of maintenance and OA requirements from models.

c. Prioritization of program requirements and conducting of "what if" runs to assess impact of what will be funded/unfunded based on projected controls/budget cuts.

d. Promotion of recommended POM budget.

5.2.2.1.1.4 OPOM Business Process Lead. The business process lead is responsible to the OPNAV N41 resource sponsor and NAVAIR/NAVSEA senior management for standardization within the price performance model. Additional responsibilities include:

a. Annual review and updating of OPOM business rules.

b. Approval of minor software, policy and business rule changes.

c. Chairperson for OPOM Configuration Control Board (CCB)

5.2.2.1.1.5 AWIS Principal Analyst. The Principal Analyst is responsible to the AWIS Program Manager and OPOM Business Process Lead for the successful management and execution of the OPOM PPM. Specific responsibilities include:

a. Prioritization, management and tracking of all approved OPOM change requests.

b. Management of the OPOM Plan of Action and Milestones (POA&M).

c. Maintenance and submission of the OPOM Verification, Validation, and Accreditation (VV&A) documentation. To maintain accreditation, documentation must be submitted via OPNAV N41, to the OPNAV N81 review board every three years or on incorporation of changes to the model's existing functionality.

d. Participation as a voting member on the OPOM CCB.

5.2.3 Maintenance Module. The Maintenance Module consists of a web-based set of models that predict the required maintenance cost across the FYDP budget cycle. The model considers current mission readiness, new production deliveries, predicted repairs, projected usage and renovation site capacities in determining its predictions.

5.2.3.1 Description. Access to the models is through the AWIS SIPRNET portal. The Module consists of 2E/2T/4T/6T/ 8E/8T/8U COG items. Guns and AAE maintenance requirements are

unclassified and are modeled directly within OPOM. The primary users of these systems are the OPNAV Resource Sponsors, LAPML, IPT PM, APML, Maintenance Manager and weapon system maintenance planners who manage the specific commodity families.

5.2.3.1.1 The module is designed to achieve maximum mission readiness in order to meet Fleet requirements. The module includes requirements, resource allocations, and readiness performance levels. The module also provides the capability to assess alternate maintenance options in response to budget shortfalls and/or supplements, resource capacity constraints at maintenance facilities, and/or other factors. In addition, the module provides the capability to track expenditures during the execution year.

5.2.3.2 Responsibilities. The responsibilities for the Maintenance Module are as follows:

5.2.3.2.1 System Analyst, Staff personnel who perform baseline requirements runs (both funded and requirement) and variable operational scenario runs of the Maintenance Module.

5.2.3.2.2 AWIS Principal Analyst. The principal analyst assists APML/weapon system maintenance planners in the planning and allocation of O&M,N funding for all sponsored weapons systems. The principal analyst is responsible for preparation of all official maintenance plans and is required to perform the following:

a. Formulate current and out-year maintenance execution and budgeting plans.

b. Provide feedback to Program Manager Air (PMA)/PMS/APML and weapon system maintenance planner on model results versus actual execution.

c. Identify maintenance candidates for tracking within the maintenance module.

d. Provide recommendations to PMA/PMS/APML and weapon system maintenance planners for current and out-year budget requirements.

e. Validate model outputs in response to NNOR projected inventory data calls.

f. Authoritative source to update OPOM generated maintenance requirements.

5.2.3.2.3 Maintenance Manager. The maintenance manager is responsible for tracking execution of the maintenance plan and is required to perform the following:

a. Routinely assess worldwide asset posture.

b. Track planned execution versus actual execution to improve model forecasting abilities.

c. Provide PMA/PMS/APML and weapon system maintenance planners' assistance in response to all maintenance related data calls.

d. Annual coordination with repair facilities in determining out-year repair cost and workload capacities.

5.2.4 Ordnance Assessment Planning Module. The OA Planning Module is a web-based application that calculates annual OA cost and the associated impacts on system readiness, maintenance costs, and inventory stockpiles. The model is constrained by the system's defined Ordnance Assessment Benchmark (OAB).

5.2.4.1 Description. The model provides and links critical information for budget forecasting directly to OPOM and the appropriate maintenance model. The application provides OA requirements to OPOM, and provides projected failure data to the maintenance planning system.

a. AUR Model - (Reliability Centered Maintenance (RCM) AURs Only) Used by Program/OA engineers to create AUR subpopulations and degradation rates caused by varying performance levels. The model applies the subpopulation quantities and degradation rates to projected serviceable populations to determine the optimal test quantity required to maintain inventories at established readiness levels.

b. Out-Year Plans - Used by Program/OA engineers to enter component and Serviceable In-Service Time (SIST) AUR surveillance/inventory assessment testing schedules. Schedules are based on the items past performance and testing history. Users create projects for items tested, test quantity, test frequency, cost and reporting location. Out-year plans articulate the program's testing requirements to accurately predict stockpile reliability levels.

5.2.4.1.1 Additionally, the module is the source for inputting predicted AUR test failures, Fleet returns and predicted component failures to the maintenance module. The OA Planning Module encompasses all ordnance programs whether organically or commercially maintained.

5.2.4.1.2 The primary users of these systems are the LAPML, PM, APML, and weapon system maintenance planners who manage the specific commodity families, and the program's in service engineers. The module is designed to maintain testing levels to achieve established in service readiness goals. The module also provides the capability to assess alternate testing options in response to budget shortfalls and/or supplements or changes to readiness goals.

5.2.4.2 Responsibilities. The responsibilities for the module are as follows:

5.2.4.2.1 LAPML/PM/IPT Lead. Responsible for programmatic support through maintenance engineering and the integration/coordination of logistic support elements. In addition, they have the vested responsibility to budget and allocate funds for all weapons logistics programs, including OA.

5.2.4.2.2 APMLs and weapon system maintenance planners. Responsible for budgeting, planning, and executing WSS and OA actions, and for all aspects of logistics for one or more programs. In this role, managers are responsible for planning and executing predictive testing actions.

5.2.4.2.3 In-Service/OA Engineers or program designee who perform baseline requirements runs (both constrained and requirement) and variable operational scenario runs of the OA Planning Module. These personnel are to assist the APML and/or weapon system maintenance planners in the planning and allocation of O&M,N funding for all sponsored weapons systems. Cognizant personnel are responsible for preparation of all official out-year plans and are required to perform the following:

a. Routinely assess and update AUR strata subpopulations and degradation rates.

b. Assess and update predicted failure rates for the following:

(1) Fleet Returns - Number of unscheduled administratively coded serviceable assets expected to be removed from fleet use due to a deficiency in performance.

(2) Predicted Component Failure Rate - Percentage and type of component expected to contribute to an AUR failing certification testing.

c. Formulate current and out-year testing requirements and budgeting plans

d. Provide PMA/PMS/APML and weapon system maintenance planner assistance in response to all related data calls.

e. Provide recommendations to PMA/PMS/APML and weapon system maintenance planners for current and out-year budget requirements.

f. Provide Reliability charts in response to data calls.

g. Authoritative source to make program specific changes to the OPOM generated OA requirements.

CHAPTER 5.3

Airborne Weapons Analysis and Reporting System

Table of Contents

Paragraph	Subject	Page
5.3.1	General	5-3-1
5.3.2	AWARS System Description	5-3-1
5.3.3	Data Output from AWARS	5-3-3
5.3.4	Responsibilities	5-3-5

CHAPTER 5.3

Airborne Weapons Analysis and Reporting System

5.3.1 General. The COMNAVAIRSYSCOM has designated the Naval Air Warfare Center Weapons Division (NAVAIRWARCENWPNDIV), as the AWARS central repository and as the central data collection point for AWARS weapons information. All data referenced in this effort shall include both domestic and foreign military sales data. AWARS provides the capability for collecting, processing, analyzing, and reporting maintenance, performance, and logistics data. AWARS maintains a life cycle history of serialized AURs and performs serialized configuration accounting of each AUR. Specific functions supported by AWARS include:

a. Logistics support and maintenance performance assessments.

b. System RMA&Q.

c. Configuration control.

d. Maintenance planning and management.

e. Deficiency report investigation and quality control.

f. Warranty requirements.

g. Weapon performance assessment.

5.3.1.1 AWARS is comprised of what was previously termed the maintenance data collection system and its subsystems, the information consolidation service, performance monitoring system, explosive component tracking, and missile flight performance analysis.

5.3.1.2 Advanced Medium Range Air-to-Air Missile (AMRAAM) will use the Air Force Reliability Asset Monitoring (RAM) data base for collection of as-built and repair data.

5.3.1.3 Data collected from each airborne weapons maintenance program via the Data Entry System (DES). The maintenance facility uses DES to enter production data, maintenance data, performance data, and inventory management data.

5.3.2 AWARS System Description. Provides information, analysis, and trend reporting of maintenance actions and performance events through the four input and output subsystems described below. It allows the assessment of RMA&Q parameters, maintenance planning technical factors, system performance, supply effectiveness, and warranty implementation considerations. Data pertaining to each complete missile, section, component, and test equipment are collected, beginning with its development and ending with its final expenditure. AWARS provides periodic standard reports, structured adhoc reports, metrics report for maintenance, configuration and location data reports, captive carry summaries and history reports.

5.3.2.1 Production Data. The production data collection begins with the manufacture of a missile AUR, section, component, or test equipment. The data is checked to ensure compatibility, and then integrated into the appropriate production data file. The following data is collected from the manufacturer upon initial production and are provided in accordance with contract data requirements.

a. As-Built Configuration Data. The manufacturer of the missile, section, component, or test equipment provides the central data collection agency with the as-built configuration list which lists the individual serialized components installed in the missile, section, or component at the time of acceptance by the Navy.

b. Factory Test Variables Data. Variables data contain missile, section, component, and test equipment data which are generated by a series of tests performed on a missile, section, or component by the manufacturer prior to Navy acceptance of the end item.

c. Factory Acceptance and Shipping Data. Acceptance and shipping data (DD 250 and/or DD 1149C) are provided by the various manufacturers involved in the delivery of missiles, sections, components, or test equipment to the Navy.

d. Warranty Data. Warranty data is provided by contractual agreement between the NAVAIRSYSCOM and the manufacturer of the missile, section, component, or test equipment stating the conditions and terms of the warranty. Warranty data includes all data necessary to monitor contractor compliance with warranty requirements.

5.3.2.2 Maintenance Data. Collected for missiles, sections, components, and related test equipment. Data is collected at the Organizational, Intermediate, and Organic Depot levels of maintenance. This data is intended to provide the Navy and other government activities with the management and technical information necessary to facilitate and enhance the logistics support of missiles, sections, components, and support equipment. All maintenance data is entered into the DES at multiple depots via AWIS. Types of maintenance data currently being collected are described below:

a. Organizational and Intermediate level maintenance data involves receipt, inspection, limited test, and repairs including reconfiguration of weapons, sections, and components.

b. Depot level maintenance data involves testing, reconfiguration of missile sections or components, repairs on missiles, sections, components, or test equipment performed by a Commercial Depot or Organic Depot. For selected depots and missile systems maintenance data also includes the test variables data collected from the test equipment for each measured test parameter. The data is forwarded to the central data collection agency for processing. AWARS receives this data and incorporates it into existing data stores.

5.3.2.3 Inventory Management Data. Provides information regarding the location and availability of missiles, sections, and components. Inventory management data involves information on missile location, maintenance due date, expiration date, and SIST of missiles, sections, and components. The following data includes location and inventory of airborne weapon AURs, sections, and components:

a. Transfer Data. During the transfer of a missile or component from one location to another data is collected.

b. ROLMS/OIS and SLIT Data. Includes items such as Serial Number (S/N), lot number, location, type, and quantity of missiles and related components.

c. Configuration Summary Form. Data is collected on the major sections and components defining the existing configuration of a missile.

5.3.2.4 Performance Data. Collected during military exercises and test flights, and include both captive flight and firing data. This data is critical in providing the Navy with information regarding the effectiveness of airborne weapons.

5.3.3 Data Output from AWARS. The data retrieval function of the AWIS allows the user to access all data types from a single computer terminal via the AWARS data base. The user may retrieve the entire history of a missile, section, or component. The output process provides both the reported and analyzed data elements for all output reports. These output reports come in three basic formats: standard data displays; display individual database records, standard data products; formatted multi-record reports which can be printed in hardcopy format and formatted reports with graphical representations.

a. The following are the standard reports that are available in AWARS.

(1) Acceptance Detail Report. List most contractual information associated with acceptance data. Acceptance data is usually received by the government upon receipt of a missile from the manufacture. This report will have each S/N on a separate line. For summarized information based on the contract number, use the acceptance report.

(2) Acceptance Summary Report. This report summarizes acceptance data based on the contract and contract line item. Acceptance data is usually received by the government upon receipt of a missile from the manufacturer. If you need to see how individual S/Ns relate to contracts, then use the acceptance detail report.

(3) Captive Carry Detail Report. Displays information about a missile when it is captive flown on an aircraft. Every flight of the missile will be listed on a separate line. For the Navy, captive carry data usually shows data from the carrier when the missile is captive flown. Catapults are when the aircraft takes off from the ship and TRAPS are when the aircraft lands aboard ship.

(4) Captive Carry Summary Report. Displays information about a missile when it is captive flown on an aircraft. The difference between the above report is that the information is summarized by the serial number of the missile. For example, if a missile has been captive flown 10 different times, the totals of all these flights will appear on one line.

(5) Configuration Report. Displays the current configuration of the missile. The current configuration is based on all available information. The baseline information comes from the As-Built Configuration List (ABCL) data, and then is modified according to any Organizational level (O-level) repairs, Intermediate level (I-level) repairs, or CSF sheets.

(6) Depot Report. Displays information about the failed part as it came into the depot repair facility. It shows where the failed part came from, when it was received, when it was complete, and the fail code. This report is useful for seeing how much activity is taking place at the depot but it does not detail how the part was actually repaired.

(7) Depot Replacement Report. This report gives detailed information on what was done to repair the part. It will tell you parts were repaired, fail codes on why the part failed, and the operation that took place.

(8) Failure Rate Report. This report is both a report and a bar graph on failure information. The failure data is based on information coming from the I-level as the missile is being tested. The failure rate report can be based on Incoming Test (IT), Continuity Test (CT), or Retest (RT). The default value is IT since that best represents whether the missile first passes or fails on the test station. This report/graph is broken down into passes vs. fails per month.

(9) History Report. Displays any maintenance, movement, configuration, captive flight, acceptance, or I-level testing data that occurs to the missile. Essentially, this report summarizes all of the standard reports.

(10) Location Report. The location report will not display the location of a missile. The location will be displayed as an encrypted value. To view either the last known location of a missile or the entire location history of the missile depending on the option chosen the report must be viewed on a classified computer.

(11) Maintenance Data System (MDS) Report. Reproduces the MDS sheet used at the I-level while repairing the missile. As with the CSF report, if you choose to print the MDS sheet, the printed sheet should look exactly like the MDS sheet used by the technician on the I-level floor.

(12) Summary of Workload at Activity. Summarizes the maintenance actions that took place at the I-level. You can see when the missile entered the activity and every action that took place on the missile.

(13) SIST. Gives basic information associated with the Maintenance Due Date (MDD). With this report you can check the current MDD or view missiles with expired MDDs.

(14) Test and Failure Report. Shows what tests have been performed on a given missile.

(15) ACES Rollup Squadron Report. Shows flight hour totals over the last 45, 90 and 180 days by squadron, stations, missile system and use code. The data is based on captive carry reports entered into the AWARS ACES.

(16) Captive Carry Flight Hours by Section. Shows total flight hours for a serialized section in each configuration for which the database has a record. The data is based on captive carry reports entered into the AWARS ACES and configuration data entered into AWARS DES.

(17) CSF Report. Will recreate a CSF form for any CSF record, identifiable by S/N and date.

(18) Captive Carry Flight Hours by Aircraft. Both a report and a graph of flight hours for the missile system by aircraft type. The data is based on captive carry reports entered into the AWARS ACES.

(19) Captive Flight Hours by Squadron. Both a report and a graph of flight hours by squadron. The data is based on captive carry reports entered into the AWARS ACES.

(20) Failure Rate by Test Set. Both a report and a graph of total failures for each serialized test set used. The data is collected from variables data supplied by the testing facilities.

(21) Failure Rate of Incoming Missiles. Both a report and a graph of passes and failures by month for missile undergoing and Incoming Test. Data is based on information provided by MDS sheet entries in AWARS DES.

(22) Captive Carry Weapons Check. Both a report and a graph of weapons check passes and failures by month. . The data is based on captive carry reports entered into the AWARS ACES.

(23) Incoming Test per Month. Both a report and a graph of the number of Incoming Tests processes by month. The data is based on information provided by MDS sheet entries in AWARS DES.

(24) Reliability Over Time. Both a report and a graph of the percentage of all tests passed by year. The data is based on information by MDS sheet entries in AWARS DES.

5.3.4 Responsibilities.

5.3.4.1 NAVAIRWARCENWPNDIV. Assigned the lead in AWARS. The project manager for AWARS is responsible for the following:

a. Establishment/maintenance of the central repository for the AWARS database.

b. Development of input/output to the database.

c. Uploading of all tape electronic media, regardless of data type into the central repository database.

5.3.4.2 Naval Munitions Commands (NMCs). Each NMC enters their data into AWARS-DES during missile maintenance, testing, and logistics data collection. Major responsibilities include the data collection, data entry, validation techniques, and utilizing the DES.

CHAPTER 5.4

Aircraft Armament Equipment

Table of Contents

Paragraph	Subject	Page
5.4.1	General	5-4-1
5.4.2	System Description	5-4-1
5.4.3	Responsibilities	5-4-2

CHAPTER 5.4

Aircraft Armament Equipment

5.4.1 General. The COMNAVAIRSYSCOM has designated the NAVAIRWARCENWPNDIV as the central repository for electronic storage of all AAE inventory data. AAE user rights and profiles are constrained by program job responsibilities and location. The AAE application resides on a secure website. A username and password can be obtained by visiting the AWIS website at https://awis.navair.navy.mil.

5.4.2 System Description. AAE application provides the AAE community a method to track and manage the AAE inventory. The application allows users to add and edit the AAE inventories. The application is comprised of two sections:

5.4.2.1 Inventory. The user from this section is allowed to add/edit the current inventory, change the status of the current inventory, input issue/turn in transfers, in-transit transfers and fly-on/fly-off transfers.

5.4.2.2 Reports. The user has access to thirteen reports. These reports are provided below:

a. Summary. This report summarizes AAE inventory by part number, listing conditions status totals, Ready-For-Issue (RFI)/Not Ready-For-Issue (NRFI) for each part.

b. Detailed Summary. This report lists AAE inventory by serial number, listing the condition status RFI/NRFI for each part.

c. Consolidated. This report summarizes AAE inventory by nomenclature, National Stock Number (NSN), and part number, listing inventory totals and totals by condition status RFI/NRFI for each part.

d. Drill Down. This report gives top-level AAE inventory and condition status RFI/NRFI starting at the Type Commander (TYCOM) level with drill down to specific squadrons.

e. Historical. This report lists AAE inventory totals to the part number level with condition status totals RFI/NRFI for each part for the month and year you selected. You can also search item history to view dates and locations for a particular item.

f. Gain/Loss. This report lists AAE inventory gains and losses to the lowest part number level as compared to the inventory balance reported 90 days prior to the current date. Also lists condition status totals RFI/NRFI for inventory on hand. You can also search for an item history to see dates and locations for a particular item.

g. Critical Inventory Level. This report lists critical NRFI AAE inventory by condition status RFI/NRFI totals to the part number level and lists the percentage of parts that are NRFI. NRFI part totals are broken out by Awaiting Parts/Awaiting Maintenance (AWP/AWM) totals. Allows the user to set the critical NRFI percentage level (default=20%). Only those parts that meet or exceed the critical level NRFI percentage you set is listed.

h. In-Transit. This report lists AAE parts that have been transferred but not yet acknowledged.

i. Point of Contacts (POCs). This report list all POCs registered in the AAE system.

j. ADHOC. This report allows users with permission to pull customized reports by any field stored in the database.

k. Summary MDD/PDD. This reports allows users to check on when the next maintenance due date is required or get a listing of all gear that is currently in preservation.

l. Conventional Ordnance Deficiency Report (CODR) Report. This report allows users to see if any of the items listed in their inventory has a CODR. If the user has AWIS DRWEB access a link is available to view the CODR.

m. TYCOM Matrix. This report gives all users a look at how the units in the system are structured. It lists the TYCOM, WING, Prime Pool and then squadron.

5.4.3 Responsibilities.

5.4.3.1 The NAVAIRWARCENWPNDIV AWIS Project Team provides system administration for the module. User administration is through the common AWIS user administration process.

5.4.3.2 Prime Pool. Prime pool (I-level) maintains custody and accountability of AAE in the pool, issued to supported activities, and in transit until receipt is acknowledged. In addition, prime pool changes the part number on existing equipment when required.

5.4.3.3 Squadron. Squadron (O-level) maintains sub custody of AAE issued to squadron.

5.4.3.4 The Original Equipment Manufacturer (OEM)/Depot functions at the Prime pool level. The OEM/Depot requests serial number additions to the system via the AWIS Support Desk. The OEM then issues the items to the requiring units.

CHAPTER 5.5

Automated Captive Carry Entry System

Table of Contents

Paragraph	Subject	Page
5.5.1	General	5-5-1
5.5.2	System Description	5-5-1
5.5.3	Responsibilities	5-5-3

List of Illustrations

Figure	Title	Page
5-5-1	Automated Captive Carry Entry System Process Flow	5-5-2

CHAPTER 5.5

Automated Captive Carry Entry System

5.5.1 General. The COMNAVAIRSYSCOM has designated the NAVAIRWARCENWPNDIV as the central repository for electronic storage of air launched missile captive carry data. User rights and profiles are constrained by program job responsibilities and location. A username and password can be obtained by visiting the AWIS website at https://awis.navair.navy.mil.

5.5.2 System Description. ACES provides the ordnance community a method to track and manage missile captive carry. Figure 5-5-1 illustrates the ACES process flow and description.

5.5.2.1 This application is available via the web.

a. The web version of the application validates the list of weapons (by type, S/N, and Naval Ammunition Logistics Code (NALC)), the aircraft (by type and Bureau Number (BUNO)), the squadrons, and the users (by squadron) that will be participating in the captive carry data collection effort automatically using the core data maintenance system in AWIS.

5.5.2.2 The application is comprised of two sections:

a. Data Entry. The user is allowed in this section to add/edit the daily log of all captive carry events.

b. Reports. The user has access to six reports. These reports are provided below:

(1) Detail Report. This report shows the number of entries in the database for weapon system by total flight hours entered by squadron and flight date.

(2) Summary Report. This report summarizes all captive carry data on a weapons system by serial number.

(3) Roll Up Report. This report rolls up all captive carry data for Pacific Carrier Air Wings, Atlantic Carrier Air Wings, Marine Air Wings and Navy Air Wings.

(4) Totals Report. This report shows total hours loaded for a specified time period, for a specific missile S/N or a unit based on your search criteria.

(5) POC Report. This lists all users registered in the ACES system.

(6) Section Report. This report allows user to search for captive carry hours by control section, guidance section, Rocket Motor, Warhead or Target Detector S/Ns.

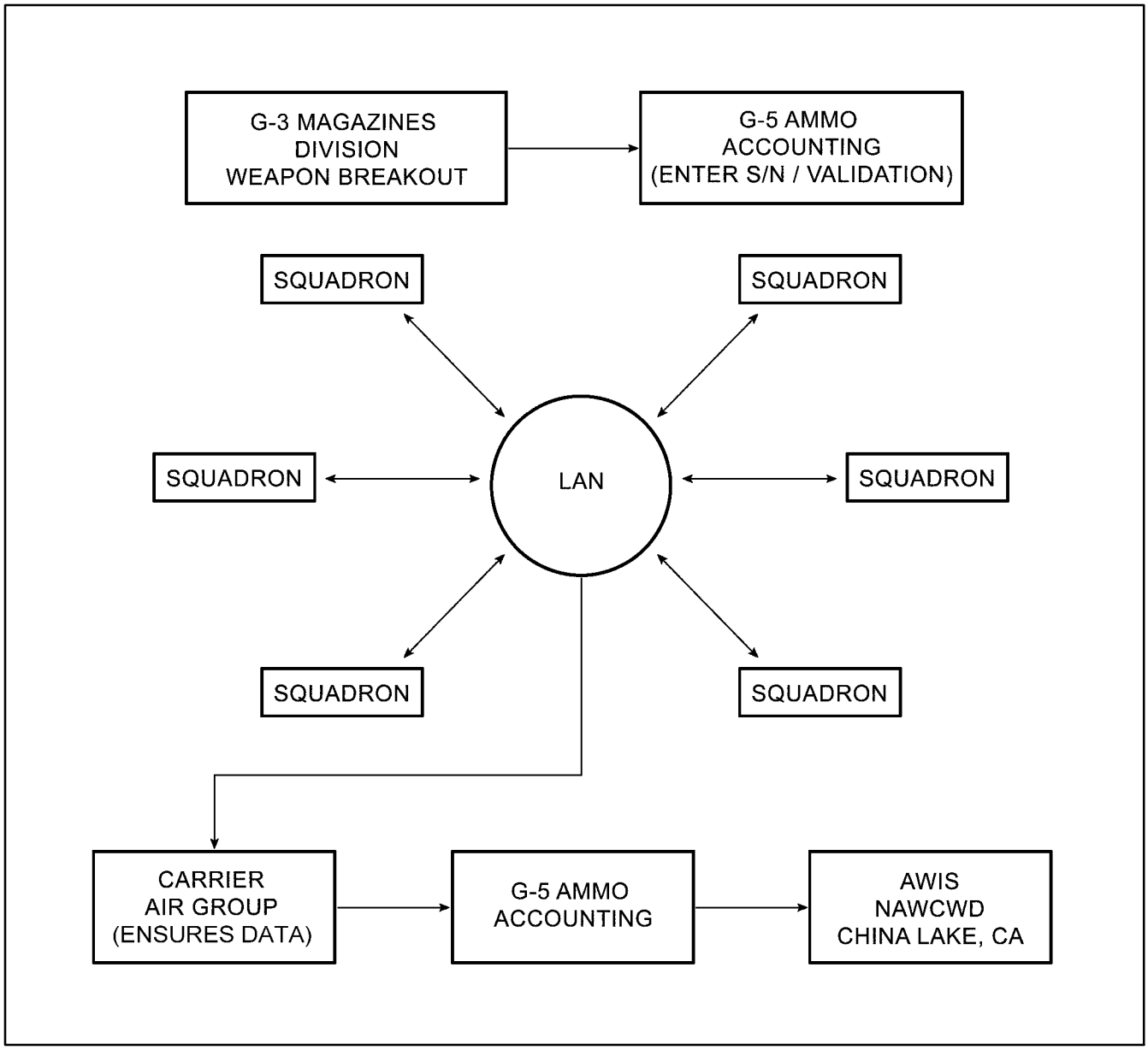

Figure 5-5-1. Automated Captive Carry Entry System Process Flow

5.5.3 Responsibilities.

5.5.3.1 The NAVAIRWARCENWPNDIV AWIS Project Team provides system administration for the module. User administration is through the common AWIS user administration process.

5.5.3.2 Squadron. The squadron is responsible for entry of the captive carry log information and validation of the data entered.

CHAPTER 5.6

Air Launched Weapons Support Team

Table of Contents

Paragraph	Subject	Page
5.6.1	General	5-6-1
5.6.2	System Description	5-6-1
5.6.3	Responsibilities	5-6-1

CHAPTER 5.6

Air Launched Weapons Support Team

5.6.1 General. The COMNAVAIRSYSCOM has designated the NAVAIRWARCENWPNDIV as the central repository for electronic storage of all Air launched Weapons Support Team (ALWT) charts. ALWT user rights and profiles are constrained by program job responsibilities. The ALWT application resides on a secure website. A username and password can be obtained by visiting the AWIS website at https://awis.navair.navy.mil.

5.6.2 System Description. The ALWT application generates metrics charts based on maintenance data from AWIS and external sources. Inventory data is imported to the application from the OIS/ROLMS list, new production and planned expenditure data from the New Production Delivery (NPD) and NCEA applications, and maintenance requirement data from 8E and 2E applications. This application is composed of three sections which are detailed below.

5.6.2.1 Metrics. This area allows a user to view various charts, and set up charts that will be emailed to PMA at predefined intervals. The currently available charts are outlined below.

5.6.2.1.1 Sufficiency and Availability. This chart will display inventory level for a selected inventory type for the current year, the historical inventory level for the past 2 years, and the predicted inventory level based on current inventory, new production and NCEA levels. It will also highlight where the current or predicted inventory levels either meet or fall short of required maintenance levels.

5.6.2.1.2 Production Due-Ins. This chart will display expected new production levels for the selected inventory item.

5.6.2.1.3 Maintenance Due-Ins. This chart will display the required maintenance levels to meet readiness goals.

5.6.2.1.4 8E Monthly Quicklook. This chart displays the number of usable and non usable inventory and compares them to the inventory goal for 8E assets.

5.6.2.1.5 2E Monthly Quicklook. This chart displays the numbers of usable and non usable inventory and compares them to the inventory goal for 2E assets.

5.6.2.2 Documents. This area allows a user search for, view, maintain and upload documents.

5.6.2.3 NNOR Worksheets. This area allows the user to view NNOR worksheets that were produced as a result of an 8E or 2E model run.

5.6.3 Responsibilities.

5.6.3.1 The NAWCWD AWIS Project Team provides system administration for the module. User administration is through the common AWIS user administration process.

5.6.3.2 Users with Read Only level access can view existing charts.

5.6.3.3 Users with Release level access are allowed to edit and release NNOR worksheets.

5.6.3.4 Users with Admin level access can add new Sufficiency and Availability charts, and generate email reports.

CHAPTER 5.7

Core Data Management System

Table of Contents

Paragraph	Subject	Page
5.7.1	General	5-7-1
5.7.2	Core Data Management System Description	5-7-1
5.7.3	Responsibilities	5-7-1

CHAPTER 5.7

Core Data Management System

5.7.1 General. CDMS is a web application that allows authorized personnel to add, archive or modify information on a Department of Defense Identification Code (DODIC), National Stock Number (NSN), or part number for missiles, bombs, missile sections or related components, Cartridge Actuated Device (CAD)/Propellant Actuated Device (PAD) or ancillary equipment. The CDMS database is the central repository for validated data. These validated data tables are used in every AWIS application. The collection of these validated data tables is called core data.

5.7.2 Core Data Management System Description. CDMS provides authorized users with an interface to add or update the asset information for the weapons systems assets. This data is centrally located in the core database which allows its use accross multiple applications. The core data elements that can be edited or entered include DODIC, Federal Supply Classification Code (FSC), National Item Identification Number (NIIN), part number, serial number, Commercial and Government Entity (CAGE), Cognizance (COG), unit of issue, unit pack, unit price, explosive components, functional description, and pictorial representations.

5.7.3 Responsibilities.

5.7.3.1 NAVAIRWARCENWPNCENDIV. Assigned the responsibility of administrative lead in the maintenance and development of CDMS. NAVAIRWARCENWPNCENDIV has the following responsibilities:

a. CDMS Administration.

b. Managing database content. This function consists of the following processes:

(1) Managing AWIS user rights and assignments.

(2) Archiving core data elements.

5.7.3.2 APML. The APML is responsible for the following:

a. Designating authorized personnel for maintenance and accuracy of CDMS data elements for their respective program.

b. Creating a catalog action in the event OIS and CDMS do not match.

CHAPTER 5.8

Engineering Management System

Table of Contents

Paragraph	Subject	Page
5.8.1	General	5-8-1
5.8.2	Engineering Management System Description	5-8-1
5.8.3	EMS Generated Data Reports	5-8-3
5.8.4	Functions	5-8-3
5.8.5	Responsibilities	5-8-3

CHAPTER 5.8

Engineering Management System

5.8.1 General. The COMNAVAIRSYSCOM has designated the NAVAIRWARCENWPNDIV as the central repository for electronic storage of all engineering test reports. All data referenced in this effort shall include both domestic and foreign military sales data. Engineering Management System (EMS) user rights and profiles are constrained by program job responsibilities and location. Primary data collection organizations are:

a. NAWCWD China Lake.

b. NSWC Crane.

c. MCPD Fallbrook.

d. NSWC Indian Head.

e. NSWC Indian Head, Yorktown Detachment.

f. NSWC Corona.

5.8.2 Engineering Management System Description. EMS provides the Naval community a method to manage and track surveillance test projects, baseline data input, Engineering Investigation (EI) tests, SIST, and AUR summary projects. The system allows users to select test items, determine system reliability and service life. EMS provides standard reports, online information and data exchange as required to support weapons engineering programs. The system is comprised of three major sections:

a. Projects. Provides engineers with the ability to set up and track a series of tests by program and test purpose. The project section identifies test item selected, test schedules and project results.

b. Technical Library. Provides keyword search entries to produce a short description and hyperlink to archived test reports and other source data.

c. Reports. Provides system generated user and management reports related to project management and item performance.

5.8.2.1 The data collected is divided into the following categories:

a. Inventory assessment testing.

b. Baseline/First Article Test Data.

c. Engineering investigation test data.

d. Service Life data.

e. Analytical reports.

f. Qualifications testing.

g. Conventional Ordnance Performance Evaluation (COPE).

h. Built-In-Test (BIT) assessment test.

i. AUR summary report.

j. Captive Carry reports.

k. Mean Time Between Failure (MTBF).

5.8.2.2 Surveillance Data. Surveillance data is collected for missiles, missile sections, bombs, CAD/PAD, and related components. The test engineer sets up a project within EMS and documents the test items, timeline, test method, test results, raw data as required, test conclusions, project reliability, recommended SIST/Service Life and Installed Life, next Ordnance Assessment (OA) and final test report. All surveillance data and test reports are entered, warehoused and distributed via the EMS module.

5.8.2.3 Baseline Data. Baseline data is collected for missiles, bombs, CAD/PAD, missile sections, and related components for their qualification and introduction into the Navy inventory. Each program is responsible for ensuring that at the time and item is delivered to the Navy that the parametric data collected for that item at final acceptance testing is uploaded to EMS via a common delimited file. This data will be used by the surveillance community for comparison to surveillance results.

5.8.2.4 Engineering Investigation Test Data. Engineering investigation test data is collected for missiles, bombs, CAD/PAD, missile sections, and related components. When directed by the Fleet Support Team (FST), the test engineer sets up a project within EMS and documents the test items, timeline, test method, test results, raw data as required, test conclusions and final test report.

5.8.2.5 Service Life Data. Quality engineers utilize EMS to document recommended changes to the usable life of an item.

5.8.2.6 Analytical Summaries. These reports provide assessment of performance, maintenance, surveillance, storage and engineering test conclusions affecting a systems reliability and usable life.

5.8.2.7 Qualification Testing. These reports are provided after the assessment of the performance of a new component or weapon system.

5.8.2.8 COPE. Cope is performed on bombs, cluster munitions, and bomb fuzes. At the end of each year a report is generate with the results of all COPE tests for that year.

5.8.2.9 BIT Assessment. This documentation is provided upon completion of a BIT in specific missile systems.

5.8.2.10 AUR Summary Report. This report is a review of the reliability of an AUR. This report is a compilation of all inventory assessment testing performed on an item, maintenance information, deficiency reports, and information logged into ACES.

5.8.2.11 Captive Carry. This report covers the number of CATS and TRAPS for a specified weapon. The data provided is flight hours, dates, BIT results, unit, aircraft type, aircraft S/N and a few other minor pieces.

5.8.2.12 MTBF. MTBF is essentially the number of hours, on average, you expect a component to be serviceable, before you encounter a failure.

5.8.3 EMS Generated Data Reports.

5.8.3.1 Baseline Data. The Navy on new purchase or rework, generates the baseline data report for the final acceptance testing on an item prior to acceptance. This report displays parametric data by serial or lot number.

5.8.3.2 Item Description. This report provides visibility into the cataloging data, physical description, explosive components, functional description and illustrations for an item.

5.8.3.3 Project timeline. The project timeline allows the user to view a milestone chart for the selected project. Managers and Program Executive Officers (PEOs) can view all projects under their cognizance.

5.8.3.4 Status Review Stoplight. The status review stoplight chart was developed by the OA manager to view the status of items by program element. The report displays performance of the item over time, and highlights those times that are marginal or problematic.

5.8.4 Functions. EMS provides the capability for collecting, processing, analyzing, and reporting surveillance data, baseline data, engineering investigation data, SIST data, and AUR summaries. EMS maintains a life cycle history of all test items by project purpose, DODIC, and serial or lot number as required. Specific functions supported by EMS include:

a. Logistics support and failure analysis assessments.

b. System RMA&Q.

c. SIST/service and installed life.

d. Surveillance planning and management.

e. Initial acceptance data repository.

f. Weapon performance assessment.

5.8.5 Responsibilities.

5.8.5.1 NAVAIRWARCENWPNDIV. Assigned the responsibility of administrative lead in EMS. The responsibilities include:

a. Establishment/maintenance of the central repository for the EMS database.

b. Development of input/output to the database.

c. Assigned as the weapon cost wise readiness project lead by COMNAVAIRSYSCOM PEO (W).

5.8.5.2 NSWC Indian Head, Yorktown Detachment. Designated to serve as the analytical authority for air launched missile maintenance, test and logistic data and has been assigned the following responsibilities:

a. Ensure data collection, data entry, validation techniques, entry/distribution of final reports and reporting of projects status is correctly entered into the EMS module.

b. Upload of all data pertaining surveillance/inventory assessment testing as well as EIs.

c. Ensure entry/distribution of final reports is accomplished using EMS.

d. Report project status using EMS.

e. Verify that all stoplight charts are up to date.

5.8.5.3 NSWC Crane. Designated to serve as the authority for surveillance testing bombs, bomb components, fuzes, rocket components, and some missile components. The following responsibilities have been assigned:

a. Upload of all data pertaining to surveillance/inventory assessment testing as well as EIs.

b. Ensure entry/distribution of final reports is accomplished using EMS

c. Report project status using EMS.

d. Verify that all stoplight charts are up to date.

5.8.5.4 NSWC Indian Head. Designated as the authority for surveillance testing of rocket motors, rockets, cartridge actuated devices and propellant actuated devices. The following responsibilities have been assigned:

a. Upload of all data pertaining to surveillance/inventory assessment testing as well as EIs.

b. Ensure entry/distribution of final reports is accomplished using EMS.

c. Report project status using EMS.

d. Verify that all stoplight charts are up to date.

5.8.5.5 Other. In the event that a program has assigned surveillance testing/inventory assessment to an organization outside of NSWC Crane, NSWC Indian Head, or NSWC Indian Head Yorktown Detachment, the organization responsible for the surveillance testing/inventory assessment or engineering investigation has the following responsibilities:

a. Upload of all data pertaining to surveillance/inventory assessment testing as well as EIs.

b. Ensure entry/distribution of final reports is accomplished using EMS.

c. Report project status using EMS.

d. Verify that all stoplight charts are up to date.

5.8.5.5.1 Examples of other organizations are NSWC Crane, Fallbrook Detachment, NAVAIRWARCENWPNDIV China Lake, or non-government agencies.

CHAPTER 5.9

Firing Reporting System

Table of Contents

Paragraph	Subject	Page
5.9.1	General	5-9-1
5.9.2	Firing Reporting System Description	5-9-1
5.9.3	Responsibilities	5-9-1

CHAPTER 5.9

Firing Reporting System

5.9.1 General. The Firing Reporting System (FRS) allows authorized users to prepare an unclassified Weapons System Firing Report (WSFR) creating an FRS on-line allows the user to utilize the item information and data relationships in the AWIS core database. FRS allows on-line searching for submitted firing reports via the internet. Access to the FRS module is through https://awis.navair.navy.mil on the NIPRNET and https://awis.nmci.navy.smil.mil on the SIPRNET. The FRS system does not collect or process classified reports on either site. In cases where supplemental classified information is required, program offices will contact reporting units directly via classified e-mail to request specific information. All FRS access requests will be processed through the common AWIS user administration process.

5.9.2 Firing Reporting System Description. FRS is a web-based application for the creation, submittal and search of WSFRS. Users are required to use the FRS website to initiate and submit a WSFR. The user can also search for a specific firing report or group of firing reports using a variety of search criteria.

5.9.2.1 The application provides on-line edits, pull-down lists and automatic inclusion of appropriate data from the core database to facilitate preparation of a firing report. The on-line search feature allows users to view a list of firing reports by ordnance system, BUNO, type, model, series, and a range of dates, impact result, or keywords in the report fields. The user can view the search results on the screen and scroll down to a copy of the specific report.

5.9.2.2 To prepare a WSFR, the user selects the ordnance system (program), impact result, date of firing and BUNO (for weapon firings). The user is then presented with a series of pull-down lists and input boxes appropriate for the ordnance system.

5.9.2.3 Outputs from the application include an approved WSFR for the unit and unit components and an on-line display of lists of drafted and submitted WSFRS for the unit. The user can also see the completed WSFR on-line, and print a hard copy version.

5.9.2.4 Downloadable templates. The system allows units to down load printable forms before going on a deployment. The downloadable excel file feature the same dropdown options as the on-line system. When web access is not available units may e-mail unclassified files directly to AWIS Support Desk at awis.helpdesk@navy.mil. For classified files please contact the AWIS Support Desk at awis.helpdesk@navy.mil for the current SIPR email address. E-mail must come from a user with submitter level access stating reason for web unavailability.

5.9.3 Responsibilities.

5.9.3.1 NAVAIRWARCENWPNDIV. The AWIS project team provides system administration for the FRS module. User administration is through the common AWIS user administration process.

5.9.3.2 TYCOM. Access approval is provided by the cognizant TYCOM designating authorized personnel for creating and submitting WSFRS for their respective unit.

CHAPTER 5.10

Gun Inventory Tracking and Reporting System

Table of Contents

Paragraph	Subject	Page
5.10.1	General	5-10-1
5.10.2	System Description	5-10-1
5.10.3	Responsibilities	5-10-3

CHAPTER 5.10

Gun Inventory Tracking and Reporting System

5.10.1 General. The COMNAVAIRSYSCOM has designated the NAVAIRWARCENWPNDIV as the central repository for electronic storage of all shipboard gun inventory data. GITR system user rights and profiles are constrained by program job responsibilities and location. The GITR application resides on a secured website. A username and password can be obtained by visiting the AWIS website at https://awis.navair.navy.mil. This application is used by all Navy and Marine Corp aviation gun activities.

5.10.2 System Description. GITR provides the gun community a method to track and manage gun inventory. The system allows users to add and edit these inventories and create reports based on the inventory. It also generates transfer messages for all crew served weapons, once the Crane registry gets a copy of both the transfer and acceptance messages they will change UIC ownership in the registry.

5.10.2.1 Reports. Provides the user with sixteen types of reports. These reports are:

a. Summary. Summarizes the gun systems inventory by Part Number (P/N), listing condition status totals for RFI/NRFI for each part.

b. Detailed Summary. Lists the gun systems inventory by serial number, listing the RFI/NRFI condition status of each item.

c. Consolidated. Summarizes the gun systems inventory by nomenclature, NSN, and P/N, listing inventory totals and totals by RFI/NRFI condition status for each part.

d. Drill Down. Gives top-level gun systems inventory and RFI/NRFI condition status at the type command code level to the serial number, RFI/NRFI condition status of specific squadrons, and nomenclature and/or P/N RFI/NRFI condition status at the top level for NAVAIRWAR-CENWPNDIV.

e. Historical. Lists the gun systems inventory totals to the P/N level with RFI/NRFI condition status totals for each part for the month and year you selected. You can also search item history to view dates and locations for a particular gun.

f. Gain/Loss. Lists the gun systems inventory gains and losses to the lowest part number level as compared to the inventory balance reported 90 days prior to the current date. Also lists RFI/NRFI condition status for inventory on hand.

g. Critical. List of critical NRFI gun systems inventory by RFI/NRFI condition status totals to the P/N level and list the percentage of parts that are NRFI. NRFI part totals are broken out by AWP/AWM totals. Allows you to set the critical NRFI percentage level (default=20%). Only those parts that meet or exceed the critical level NRFI percentage the user sets is listed.

h. In-Transit. Lists the gun parts that have been transferred but not yet acknowledged.

i. Rounds Fired-Gun System. Lists the gun systems by serial number showing the number of rounds fired through the gun with a total since reset and the cumulative totals for each gun. It also has a hyperlink that allows you to click on a serial number to get the details by date when the rounds were actually fired.

j. Round Fired-Crew-Served. Lists the crew served gun systems by serial number showing the number of rounds fired through the gun with a total since reset and the cumulative totals for each gun. It also has a hyperlink that allows you to click on a serial number to get the details by date when the rounds were actually fired.

k. Rounds Fired Summary. Lists each item/serial number (guns and how they are configured and other items) showing the current total number of rounds fired against the serial numbered item and the date it was last updated. It also has a hyperlink that allows you to click on a serial number to get the details by date when the rounds were actually fired.

l. POCs. Lists all POCs registered in the GITR system.

m. Crane Comparison. Compares all the crew served weapons Unit Identification Code (UIC) owners listed in GITR with the UIC owners listed in the Crane registry and gives a complete list of like UICs and mismatched UICs.

n. TYCOM Matrix. This report gives all users a look at how the units in the system are structured. It lists the TYCOM, WING, third level and then fourth level units.

o. Gun System Detail. This report gives a list by serial number of all the gun systems in a units inventory with the serial number of the gun configured inside the system. It also lists the asset location or current BUNO gun is loaded on with condition status RFI/NON-RFI.

p. Naval Message. This report is listed under the Historical menu option. This report allows users to search and print copies of the Naval messages that transferred or accepted crew served weapons.

5.10.2.2 Inventory. Provides user with five options for manipulating the gun inventory. These options are:

a. Add/Edit Inventory for the F-18/AV-8 Guns, All Others Serialized and All Others Non-Serialized. These gun screens allow you to edit the part numbers on any items in your inventory.

b. Rounds Fired. The rounds fired summary screen allows you to add and/or edit the rounds fired inventory list.

c. F-18/AV-8 Configuration. Allows you to add and/or edit the F-18/AV-8 gun configuration inventory list.

d. Edit Status. The F-18/AV-8 gun, All Other Serialized and All Others Non-Serialized screens allow you to edit the status of the guns in your inventory.

e. Transfers. The issue/turn-in inventory screen allows the user to initiate an issue a transfer between Third Level (I-level) and Fourth level (O-level). The types of transfers possible are: issue/turn-in, transfer, transfer/receipt inactive depot gear, transfer/receipt supply gear, in-transit, fly-on/fly-off, deploy, and redeploy.

5.10.3 Responsibilities.

5.10.3.1 The NAVAIRWARCENWPNDIV AWIS Project Team provides system administration for the module. User administration is through the common AWIS user administration process.

5.10.3.2 Third Level. The third level unit (I-level) maintains custody and accountability of gun systems in the pool, issued to supported activities, and in transit until receipt is acknowledged.

5.10.3.3 Fourth Level. The fourth level unit (O-level) maintains sub custody of existing equipment and loads the rounds fired against items in their inventory.

5.10.3.4 GITR Reporting Requirements. Refer to Volume II, Chapters 3.2 and 3.3, of this manual for reporting requirements.

CHAPTER 5.11

Logbook Data Entry System

Table of Contents

Paragraph	Subject	Page
5.11.1	General	5-11-1
5.11.2	System Description	5-11-1
5.11.3	Configuration Summary Forms/Missile Log Sheets	5-11-2
5.11.4	Maintenance Due Date Changes	5-11-2
5.11.5	Responsibilities	5-11-3

CHAPTER 5.11

Logbook Data Entry System

5.11.1 General. Missile logbooks and records are an integral part of Air Launched Missile (ALM) maintenance. Logbooks are the administrative means of providing baseline documentation on the ALM age, status, operational history, movement, modification, configuration, MDDs, maintenance actions, transfer history and receipt accounting data throughout the life cycle of the missile. Missile logbooks accompany each ALM and major missile section from location to location. The COMNAVAIRSYSCOM requires such information for missile system reliability analysis.

a. A username and password can be obtained for access to missile logbook data by visiting the AWIS website at https://awis.navair.navy.mil.

5.11.2 System Description. The COMNAVAIRSYSCOM has designated NAVAIRWARCENWPNDIV as the central repository for electronic storage of ALM logbook data. User rights and profiles are constrained by program job responsibilities and location.

5.11.2.1 Air launched missile logbook entries are required when:

a. Modification of the ALM has been accomplished.

b. TDs such as Airborne Weapons Bulletins (AWBs), Airborne Weapons Changes (AWCs) and Airborne Software Changes (ASCs) have been incorporated.

c. Any type of maintenance has been performed.

d. Air launched missile testing has been accomplished including BIT.

e. An age limited component has been replaced.

f. The extension of AUR MDD.

g. The ALM is captive carried.

h. The ALM is expended.

5.11.2.2 The missile logbook application is used by AARGM, HARM, Harpoon, Sidewinder, Sparrow, SLAM-ER, JSOW.

NOTE

AMRAAM is not required to report changes via automated logbooks.

5.11.2.3 The application is comprised of two sections:

a. Query window.

b. Data entry.

5.11.2.4 The missile logbooks are electronically generated at the AUR Depots and Naval Airborne Weapons Maintenance Unit (NAWMU) using the query window in the logbook application or by using AWARS-DES. The logbooks consist of a combined Missile CSF and missile log sheet, a logbook cover and any applicable safety tags. Hellfire and Tow are not required to have a missile logbook.

5.11.2.5 Upon expenditure of the ALM, the logbook will be forwarded by the Intermediate Maintenance Activity (IMA) or Weapons Department/NMC to the FST. In the event the missile is the subject of a deficiency report i.e. CODR, Explosive Mishap Report (EMR), Explosive Event Report (EER) the logbook will be retained until closing action is completed and the FST determines the logbook is not required.

5.11.3 Configuration Summary Forms/Missile Log Sheets. Remove the combined missile CSF/missile history log when missiles return for maintenance at either AUR Depots or NAWMUs. Provide this information to the AWARS representative at each site.

5.11.3.1 In the case of missiles that are not currently bar-coded. A replacement missile CSF/missile history log will be returned to the technician.

5.11.3.2 For bar-coded missiles the CSF portion of the combined form will be filled. The electronic generation of these combined forms will save printing and storage cost and provide an efficient means for collecting Fleet maintenance data.

5.11.3.3 Selected AUR Organic Intermediate, NAWMU and Commercial Depot Maintenance Activities that have proper access to the AWIS, have the capability to generate new CSF. When missiles are returned to the Fleet by maintenance facilities new forms are generated by technical personnel that capture the maintenance actions performed at each site. The new forms are placed in the missile container. The CSF and any applicable safety tags are combined with an automated missile logbook form also obtained from the AWIS web page.

5.11.3.4 Activities that receive incomplete or missing ALM logbooks and records, or receive an ALM without a logbook or records, should contact the originating NAWMU or the Naval Weapons Station (NWS) for the logbook.

NOTE

Hellfire, Tow and Maverick are not required to have a missile logbook.

5.11.3.5 Missing missile logbooks can be obtained by downloading them directly from the AWIS website by personnel with approved access for their type/model/series missile.

5.11.4 Maintenance Due Date Changes. If the MDD in the logbooks is different from the MDD on the container, the MDD marked on the container takes precedence over the logbook. The logbook should be changed to reflect the more current MDD on the container at the first available opportunity that does not create additional workload to remove the logbook.

5.11.4.1 It is not necessary to unpalletize a unit pack to mark the new MDD on all sides of the container when a MDD is changed, extended or reestablished.

a. Marking at least one end of the container and updating the material condition tag/label will be sufficient.

b. The complete marking of the container will be accomplished on the next occasion that the unit pack is broken.

5.11.4.2 If two MDDs are listed on a container, the latest MDD marking on the container will be used; provided that it matches the markings on the material condition tag/label.

5.11.5 Responsibilities. The NAVAIRWARCENWPNSDIV AWIS Project Team provides:

a. System administration for the module. User administration is through the common AWIS user administration process.

b. Periodic updates to permanent files using maintenance data system input.

5.11.5.1 Squadrons. The squadron is responsible for entry of the missile logbook information.

CHAPTER 5.12

Notice of Ammunition Reclassification/Ammunition Information Notice Reporting System

Table of Contents

Paragraph	Subject	Page
5.12.1	General	5-12-1
5.12.2	Notice of Ammunition Reclassification/Ammunition Information Notice System Description	5-12-1
5.12.3	Responsibilities	5-12-1

CHAPTER 5.12

Notice of Ammunition Reclassification/Ammunition Information Notice Reporting System

5.12.1 General. Users can prepare a NAR or AIN request using the All Weapons Information System (AWIS) module via https://awis.navair.navy.mil. This application allows on-line searching for issued NAR/AIN via the Internet.

5.12.2 Notice of Ammunition Reclassification/Ammunition Information Notice System Description. NAR/AIN is a web based application for the search of NARs and AINs. The NAR/AIN website allows the user to perform the following tasks:

a. Search for specific NAR or AIN using a variety of search criteria.

b. Retrieve contact list of the APML for each program element.

c. Retrieve or search a contact list of all authorized users.

5.12.2.1 The NAR/AIN database is updated to reflect NAR/AINs issued through the Ordnance Information System (OIS). This process ensures availability of all NAR/AINs through the search function.

5.12.2.2 This application has an on-line search feature that allows users to view a list of NARs and AINs that contain specified text. The user can view the search results on the screen.

5.12.3 Responsibilities.

5.12.3.1 NAVAIRWARCENWPNDIV. The following responsibilities have been assigned:

a. Provide administration for the NAR/AIN module including the interface to the OIS and the Naval message system.

b. User administration.

CHAPTER 5.13

Targets Performance Reporting Systems

Table of Contents

Paragraph	Subject	Page
5.13.1	General	5-13-1
5.13.2	System Description	5-13-1
5.13.3	Responsibilities	5-13-1

CHAPTER 5.13

Targets Performance Reporting Systems

5.13.1 General. The COMNAVAIRSYSCOM has designated the NAVAIRWARCENWPNDIV as the central repository for electronic storage of all targets inventory data. TPR system user rights and profiles are constrained by program job responsibilities and location. The target applications reside on a secured website. A username and password can be obtained by visiting the AWIS website at https://awis.navair.navy.mil. Primary data collection organizations are:

a. NAWCWD Pt. Mugu, CA.

b. NAWCWD China Lake, CA.

c. PMRF Kauai, Hawaii.

d. Others.

5.13.2 System Description. The TPR system will provide the target community a method to track and manage target inventory and performance. The system allows users to add and edit target, Target Ancillary/Auxiliary Systems (TA/AS), consumable inventories, and performance reports. The application is comprised of two sections.

5.13.2.1 Inventory. The section provides users a method to manage inventory at a location.

5.13.2.1.1 Data Update. Provides users with a method of adding , editing, or relocating the current target flight consumables, TA/AS and kit inventory.

5.13.2.1.2 Reports. The report section provides the user with thirteen types of reports. These reports are inventory report, inventory status summary, allocation/expenditure status, expend report, monthly report, and historical. Each report can be sorted to show targets, TA/AS equipment, consumables only or a combination of targets and TA/AS equipment data. Provides monthly report, kit status, kits status summary, TDU-32 status, TDU-32 status summary, flight consumable status, flight consumable status summary, and TOW target inventory status.

5.13.2.2 Performance. This section provides users a method to report target performance information,

5.13.2.2.1 Data Update. Provides user with a method of editing or adding target performance information including the current target, flight consumables, TA/AS, and kits used in the operation.

5.13.2.2.2 Report. There are three types of reports that can be obtained from TPR reports. These reports are: launch and retrieval summary report, launch and retrieval detail report, and TPR/inventory error report.

5.13.3 Responsibilities.

5.13.3.1 The NAVAIRWARCENWPNDIV AWIS Project Team provides system administration for the target reporting module. User administration is through the common AWIS user administration process.

5.13.3.2 Target Facilities. Each target facility has the responsibility for the following:

a. Updating inventories within the target reporting system.

b. Updating TPR with target performance data within 48 hours of expenditure, excluding weekends.

5.13.3.3 APML. The APML has the responsibility to ensure that each target facility is maintaining the inventory and performance databases within AWIS.

CHAPTER 5.14

Configuration and Data Management Support System

Table of Contents

Paragraph	Subject	Page
5.14.1	General	5-14-1
5.14.2	CADMSS System Description	5-14-1
5.14.3	CADMSS System Operation	5-14-2
5.14.4	Responsibilities	5-14-3

CHAPTER 5.14

Configuration and Data Management Support System

5.14.1 General.

5.14.1.1 The CADMSS is an on-line computerized system that provides a centralized master database with a basic capability to support configuration and data management functions imposed by SECNAVINST 5000.2 series. Configuration management and data management disciplines are employed in varying degrees throughout an entire weapons life cycle to control formalization of the weapons system design. Control is exercised through the establishment of a baseline. Each baseline is described by refined and more detailed technical documentation. The baselines (and associated documentation) serve as points of departure from which subsequent refinement and/or modification can be made. The end product of the configuration management and data management disciplines, prior to in-service use, is an operational system sufficiently documented to permit production and deployment. The function of CADMSS within the configuration management process is configuration identification and status accounting. Configuration identification is provided by system, by configuration item, and by contract. The CADMSS function within the data management process includes data identification, procurement specification, configuration audit, data storage, and maintenance of the established master data base. Types of data that are managed by using CADMSS include:

a. Technical data, which includes engineering drawings, technical manuals, and specifications.

b. Change data, which include engineering change proposals, deviations, and waivers and various contractor change types.

c. Baseline data, which include product and contract baseline lists (bills of material) and procurement lists.

d. Logistics data, which include parts lists, serialization, packaging, handling, shipping, and testing.

5.14.1.2 All of this data is maintained in CADMSS and updated as changes occur to provide the data tools to support data management disciplines.

5.14.2 CADMSS System Description. CADMSS is a centralized data system using versatile modularized software packages to provide management and engineering functional capabilities necessary to monitor, maintain, and control the effectiveness of weapons systems in the areas of in-service engineering, configuration data, and project management. CADMSS was designed so that each module satisfies the specific needs of a particular functional area. The modules interact with each other to provide a capability for meeting user total requirements. CADMSS consists of four interacting modules or subsystems. The following paragraphs describe some of the most commonly used on-line queries:

a. The Technical Documentation Accounting Module (TDAM-001) provides for indexing and accounting of technical data repository information. It contains the following sub-modules:

(1) Document status, which identifies each document, the current revision status, and the revision history.

(2) Action status which identifies the status of changes to publications and drawings.

(3) Relates part number to drawing.

b. Configuration item deliverables status, which tracks these by serial number.

c. The Baseline Accounting Module (BAM-007) provides for identification and indenture of parts by bill of material and storage for product baselines. Identifies components by serial/lot numbers. The following are its most commonly used on-line queries:

(1) Baseline Change Status identifies each engineering change, deviation, and waiver impacting any part, document, or contract for any given baseline.

(2) Baseline Total (where used) associates parts with each next higher assembly, identifying document, and weapons system per given baseline.

(3) Indenture breakdown displays all engineering drawing data in bill-of-material, top-down format for any given baseline.

(4) Identifies and indentures components by serial/lot number.

d. The Change Accounting Module (CAM-004) identifies engineering changes and tracks the change processing milestones. The following are its most commonly used on-line queries:

(1) Change milestones, which concern the engineering change proposal processing status.

(2) Change form description, which displays all or selected data entered on the change form.

(3) Change status by system or major component, which identifies all changes associated with a system or major component (system identification) by type, class, status, facility, or time frame.

5.14.3 CADMSS System Operation.

5.14.3.1 On-line queries and hard copy reports combine to provide a wide range of output products that enhance the utility of CADMSS. The on-line queries display data that is easily transmitted in a limited number of screens. Complex lengthy reports are prepared in a selected report format.

5.14.3.2 Identified below are the output reports from the CADMSS and their use:

a. Technical Documentation Status Report (TDSR). Used as a formal listing of all documents by one or more weapon systems and shows the commonality of each document.

b. Design Application Record/Equipment Indentured Report (DAR/EIR). Used to verify the content of Product Baseline Lists (PBLs) and Automated Data Lists (ADLs). Also provide identification of next higher assemblies and establish part commonality within a configuration item.

c. PBL. Used to establish contract baselines and identify the current design of a configuration.

d. ADL. Used a PBL for COMNAVSEASYSCOM requirements.

e. Open Action Report (OAR). Used for a variety of tasks to include:

(1) Providing a current listing to the drawing and specification manager of those changes which are awaiting incorporation into a drawing or specification.

(2) Providing a current listing to the Configuration Control Board (CCB) chairman of those changes which are in the review cycle awaiting a disposition.

(3) Providing a current listing to the component configuration manager to identify all open changes currently awaiting action and the frame of each.

f. Change Status by System Report (CSSR). Used to provide a list of all changes received against a weapon system to contractor, sponsors, and program engineers.

g. Contract Change Status Report (CCSR). Used to verify the contractor baseline reports, identify the current contractor baseline and contractor baseline audits.

h. Configuration Status Accounting Report (CSAR). Used to provide a list of changes, sorted by change type, written against a specific contract.

5.14.4 Responsibilities. The Chief of Naval Operations (CNO) is the Functional Sponsor. The COMNAVAIRSYSCOM Assistant Commander of Systems and Engineering is the Functional Manager, COMNAVAIRSYSCOM is the Project Manager, and NAVAIRWARCENWPNDIV is the Automated Data System and Telecommunication Manager.

CHAPTER 5.15

Technical Directives

Table of Contents

Paragraph	Subject	Page
5.15.1	General	5-15-1
5.15.2	Technical Directive Systems (TDS)	5-15-1
5.15.3	Roles and Responsibilities	5-15-1
5.15.4	TDS Compliance Reports	5-15-3

CHAPTER 5.15

Technical Directives

5.15.1 General. The AWIS TDS is the preferred method for the issuing and compliance tracking of all NAVAIR Ordnance Systems and ancillary equipment TDs including AAE, Targets, and Guns. The TDS application resides within the AWIS suite of tools at https://awis.navair.navy.mil.

5.15.2 Technical Directive Systems (TDS). TDS provides a method to draft technical directives (TD), and track TD compliance for all NAVAIR ordnance systems and other systems as outlined in the NA 00-25-300. The application enforces standardization of the technical directive creation process while insuring data accuracy and validation. Additionally provides a work flow for verification, validation and approval of the technical directive. Compliance is tracked and automatically updated from various data sources. The TDS provides for:

a. Maximum use of existing data collection systems.

b. Production of compliance summary reports, active TD lists, and personal computer memory card international association (PCMCIA) card return status.

c. Production of special reports, as required (available reports are listed in Figure 4-1).

d. Daily compliance data updates.

e. Annual purge of completed TD data from the active files.

f. Monthly TD rescission reports sent to Naval Air Technical Data and Engineering Service Command (NATEC) and Technical Directive Status Accounting System (TDSA).

5.15.3 Roles and Responsibilities. This system shall be used for TD initiation and compliance tracking for all COMNAVAIRSYSCOM ordnance and ancillary items to include AAE, Guns, and Targets.

5.15.3.1 The NAVAIRWARCENWPNDIV AWIS Project Team shall be the system administrator for the TDS module. Responsibilities include:

a. System administration to include monitoring of external data interfaces with the TDS application.

b. Central liaison with TDS users including TYCOMs/controlling custodians, NALCOMIS, Optimized Organizational Maintenance Activity (OOMA)/Configuation Management Information System (CMIS) BLM, functional wings, FSTs, reporting custodians, NAVAIR system team members, NATEC, and repair facilities.

c. Provide training and assistance.

5.15.3.2 PMA.

a. Approve a technical directive for accuracy and dissemination to the activities responsible for completing this technical directive.

b. Record all technical directive disapproval comments in TDS at https://awis.navair.navy.mil.

5.15.3.3 Assistant Program Manager (APML). The APML shall initiate TDs for their programs. Responsibilities are:

a. Validate incorporated and unincorporated compliance totals.

b. Initiate and track TD through approval process.

c. Rescind TD on compliance completion.

d. Resolve all compliance deficiencies using the TD deficiency screens in TDS.

5.15.3.4 TYCOM.

a. Determine verification facility for TDs with a maintenance level of organizational or intermediate.

b. Approve technical directive for accuracy, address TDs, and dissemination to the Fleet in TDS at https://awis.navair.navy.mil.

c. Monitor TD compliance facilities for return of rescinded PCMCIA software cards on receipt of new PCMCIA cards.

5.15.3.5 Verification Facilities. Verify TD accuracy.

a. Approve or reject TDs in TDS at https://awis.navair.navy.mil.

b. Record all verification comments in TDS at https://awis.navair.navy.mil.

5.15.3.6 TD Compliance Facilities. Each TD compliance facility is responsible for reporting accurate compliance to TDS. Reporting shall be accomplished by recording results in TDS, OOMA/NALCOMIS, AWARS-DES, Automated Logbooks, Common Munitions Bit/Re-programming Equipment (CMBRE) upload module, AAE inventory, or GITR as specified in the TD under “records Affected” (paragraph 12). The responsibilities of each of the compliance facilities are as follows:

a. Report compliance in accordance with the technical direction section “records affected” (paragraph 12).

b. Report all Aviation Armament Change (AAC) or Aviation Armament Bulletin (AAB) using a transaction code 41or 47 as specified in the TD section “records affected”.

c. Upload all camber files to the AWIS website to ensure accurate TD compliance.

d. Return old PCMCIA cards in a timely manner as specified in the TD.

e. Record PCMCIA return dates in https://awis.navair.navy.mil.

5.15.4 TDS Compliance Reports. The compliance records in TDS are generated from multiple sources. These sources include the following applications: AWARS-DES, OOMA/NALCOMIS, GITR, AAE inventory, and CMBRE data files.

NOTE

To ensure accurate and timely compliance data it is important that all activities maintain correct data in each of these modules.

CHAPTER 5.16

Common Munitions Built-In-Test Reprogramming Equipment

Table of Contents

Paragraph	Subject	Page
5.16.1	General	5-16-1
5.16.2	System Description	5-16-1
5.16.3	Responsibilities	5-16-1

CHAPTER 5.16

Common Munitions Built-In-Test Reprogramming Equipment

5.16.1 General. The COMNAVAIRSYSCOM has designated the NAVAIRWARCENWPNDIV as a repository for electronic storage of CMBRE information. CMBRE user rights and profiles are constrained by program job responsibilities. The CMBRE application resides on a secure website. A username and password can be obtained by visiting the AWIS website at https://awis.navair.navy.mil.

5.16.2 System Description. The CMBRE application provides the weapons community a method to upload and report on data from the CMBRE equipment. The application is comprised of two sections:

5.16.2.1 Upload - In this section the user is allowed to add new CMBRE files to the archive.

5.16.2.2 Reports - The user has access to four reports. These reports are provided below:

a. CMBRE. This reports the latest test information for each serial number and allows download of the actual CMBRE file.

b. Elapsed Time Indicator (ETI). This report will display ETI totals by NALC.

c. Missile Event Data Files (MEDF). This report displays data from MDEF files and allows download of the file.

d. History. This report will display all the test information available in the application.

5.16.3 Responsibilities.

5.16.3.1 The NAWCWD AWIS Project Team provides system administration for the module. User administration is through the common AWIS user administration process.

5.16.3.2 Users with Upload level access can both upload new CMBRE files and run reports.

5.16.3.3 Users with Read Only level access can view reports.

CHAPTER 5.17

Fleet Weapons Support Team

Table of Contents

Paragraph	Subject	Page
5.17.1	General	5-17-1
5.17.2	System Description	5-17-1
5.17.3	Responsibilities	5-17-1

CHAPTER 5.17

Fleet Weapons Support Team

5.17.1 General. The COMNAVAIRSYSCOM has designated the NAVAIRWARCENWPNDIV as a repository for electronic storage of Fleet Weapons Support Team (FWST) information. FWST user rights and profiles are constrained by program job responsibilities. The FWST application resides on a secure website. A username and password can be obtained by visiting the AWIS website at https://awis.navair.navy.mil.

5.17.2 System Description. The FWST application allows Fleet support and field manager users to accurately and uniformly enter all data required to calculate and generate reports demonstrating Return on Investment (ROI) and Fleet Savings that are a direct result of FWST implementation. The application consists of three main sections, as described below:

5.17.2.1 Data Entry. In this section the user is allowed to record a new or modify an existing un-submitted support event, and enter certification and qualification information for them.

5.17.2.2 Reports. The user has access to one report. The narrative report will display a count of the User Reports covering the period specified in the search, two pie charts displaying the percentage of reports by general category, and the narrative for each report.

5.17.2.3 Administration. In this section the program manager is allowed to enter allowable values for fields in the user reports, such as FWST units, equipment, ABC codes.

5.17.3 Responsibilities.

5.17.3.1 The NAWCWD AWIS Project Team provides system administration for the module. User administration is through the common AWIS user administration process.

5.17.3.2 Users with Program Manager can enter and modify user reports and qualification and certification information, approve submitted reports, view the Narrative report, and control allowable field values.

5.17.3.3 Users with NAVAIR level access can view the narrative report only.

5.17.3.4 Users with Field Representative level access can enter new user reports and qualification and certification information, and view submitted and approved reports.

5.17.3.5 Users with Field Manager level access can enter new user reports and qualification and certification information, edit qualification and certification for other users, view submitted and approved reports, and access the narrative report.

CHAPTER 5.18

Global Naval Message

Table of Contents

Paragraph	Subject	Page
5.18.1	General	5-18-1
5.18.2	System Description	5-18-1
5.18.3	Responsibilities	5-18-1

CHAPTER 5.18

Global Naval Message (GNM)

5.18.1 General. The COMNAVAIRSYSCOM has permitted the NAVAIRWARCENWPNDIV to host the GNM module. GNM user rights and profiles are constrained by program job responsibilities. The GNM application resides on a secure website. A username and password can be obtained by visiting the AWIS website at https://awis.navair.navy.mil.

5.18.2 System Description. The GNM application permits users to compose and release Naval messages. The application currently allows two types of message, a generic message, and a message specifically requesting support from the Weapon Assist Team (WAT). The application consists of three main sections, as described below:

5.18.2.1 Create Message. In this section the user creates or edits a message of the GENADMIN class, either in a generic format, or in a format specifically requested. An example of this is the Naval message format created for requesting support from the WAT. The generated message will conform to the Naval Message guidelines as specified in the Naval Telecommunications Procedure 3 document.

5.18.2.2 Search Message. The user may search for messages generated by the application.

5.18.2.3 View Message. The user may view or print formatted messages generated by the application.

5.18.3 Responsibilities.

5.18.3.1 The NAWCWD AWIS Project Team provides system administration for the module. User administration is through the common AWIS user administration process.

5.18.3.2 Users with Message Reader level access can search for and view messages created by the application.

5.18.3.3 Users with Message Writer level access can search for messages, and create new message and submit them to a release authority.

5.18.3.4 All users with Message Release Authority shall have a Message Release Authority Letter on file signed by the CO (for civilians the letter shall be signed by the activities department head) with the AWIS Project Team, and can both create and release messages, as well as search for and view messages created through the application.

NOTE

Contractors will not be granted Message Release Authority.

CHAPTER 5.19

Mine Allowance Database

Table of Contents

Paragraph	Subject	Page
5.19.1	General	5-19-1
5.19.2	System Description	5-19-1
5.19.3	Responsibilities	5-19-1

CHAPTER 5.19

Mine Allowance Database

5.19.1 General. The COMNAVAIRSYSCOM has designated the NAVAIRWARCENWPNDIV as a repository for electronic storage of MAD information. MAD user rights and profiles are constrained by program job responsibilities. The MAD application resides on a secure website. A username and password can be obtained by visiting the AWIS website at https://awis.navair.navy.mil.

5.19.2 System Description. The MAD application permits MOMAUs to determine their mine material and support equipment assets required to build up mines. This application is composed of three basic functions which are detailed below.

5.19.2.1 View Items. This function allows a user to search for and view basic information, uses, acceptable alternates, and sub components of All-Up Mines, Mine Components, Mine Handling Equipment, Test Sets, Tools and Publications.

5.19.2.2 Build Up Mine. This function allows the user to specify a quantity of each particular mine to be built, and the application will generate a list of all the components, test sets, handling equipment, tools and publications required in order to build up the specified quantity of mines.

5.19.2.3 Administration. This function allows a user with administration privilege to add new mines, components and configurations to the database.

5.19.3 Responsibilities.

5.19.3.1 The NAWCWD AWIS Project Team provides system administration for the module. User administration is through the common AWIS user administration process.

5.19.3.2 User with Reader level access can view mine components, configurations and support equipment, and can generate a list of all the components and support equipment required to assemble a mine.

5.19.3.3 Users with Administrator level access can view and update mine components, configurations and support equipment.

CHAPTER 5.20

Non Combat Expenditure Allowance

Table of Contents

Paragraph	Subject	Page
5.20.1	General	5-20-1
5.20.2	System Description	5-20-1
5.20.3	Responsibilities	5-20-2

CHAPTER 5.20

Non Combat Expenditure Allocations

5.20.1 General. The COMNAVAIRSYSCOM has designated the NAVAIRWARCENWPNDIV as a repository for electronic storage of Non Combat Expenditure Allocations (NCEA) information. NCEA is a web application that allows authorized personnel to develop submit and track NAVAIR sponsored Testing and Training Requirements (TTR). The application allows the NAVAIR claimant to balance annual TTR submissions against the authorized NCEA and provides a mechanism for submitting and allocating augment requests.

5.20.2 System Description. NCEA is a web application that allows authorized personnel to develop submit and track NAVAIR sponsored TTR. The application allows the NAVAIR claimant to balance annual TTR submissions against the authorized NCEA and provides a mechanism for submitting and allocating augment requests. NCEA provides the ability to develop, track and archive NCEA project information for NAVAIR test activities in a central repository. TTRs are developed based on Test and Evaluation Mater Plans (TEMP) and aircrew proficiency requirements. Each requirement is entered into the application in the form of a test project. Each project contains one or more DODICs and the quantity required for each year of the project. Once the project is approved by the Claimant a TTR is created. The NAVAIR TTR, which is a compilation of all project data, is automatically submitted via email to the NAVSUP GLS AMMO. OPNAV/NAVSUP GLS AMMO approved quantities are loaded into the application and allocated by the Claimant. NCEA is composed of three areas which are detailed below.

5.20.2.1 Projects. This area allows users to search, create, edit and delete test projects. This section also provides the ability to submit augmentation requests. Once a project is created it is available for inclusion in each subsequent fiscal year.

5.20.2.2 TTR. This area permits claimants to approve projects and submit the NAVAIR TTR to NAVSUP GLS AMMO.

5.20.2.3 NCEA This area permits the Claimant to upload the approved NCEA quantities into the application. The application provides a recommended distribution of assets for Claimant approval. The Claimant may adjust recommended quantities based on emerging requirements. Claimant approved quantities are assigned to each project for Project Owner review and usage.

5.20.2.4 Reports Application generated reports include the following:

5.20.2.4.1 All Projects NCEA Report. This report summarized all projects entered into the application, compares requested totals with the allocated totals and reports whether an augmentation request has been filled.

5.20.2.4.2 PMA Asset Report. This report provides a summary of projects entered by project owner, project name and lead NALC/DODIC, including the requested quantity for each Lead NALC/DODIC for the specified fiscal year.

5.20.3 Responsibilities.

5.20.3.1 NAVAIRWARCENWPNDIV China Lake serves as the central repository for electronic storage of all NAVAIR sponsored weapon systems new production information. The AWIS Project Team provides system administration for the module. User administration is through the common AWIS user administration process. NAVAIRWARCENWPNCENDIV is assigned the responsibility of administrative lead in the maintenance and improvement of the NCEA application.

5.20.3.2 NAVAIR Claimant level access is the single point of contact with NAVSUP GLS AMMO and OPNAV. Responsible for Consolidation of and endorsement of the NAVAIR approved TTR submission. Distribution of OPNAV/NAVSUP GLS AMMO approved Allocations, and Review/Mitigation/Endorsement of Augmentation Request.

5.20.3.3 Project Owner level access (Sub claimant) develops initial requirement and subsequent impact for TTR and coordinates requirements and usage between user activities and Claimant.

5.20.3.4 Test Activity level access reports on actual expenditure of the allocation.

CHAPTER 5.21

New Production Deliveries

Table of Contents

Paragraph	Subject	Page
5.21.1	General	5-21-1
5.21.2	System Description	5-21-1
5.21.3	Responsibilities	5-21-1

CHAPTER 5.21

New Production Deliveries

5.21.1 General. The COMNAVAIRSYSCOM has designated the NAVAIRWARCENWPNDIV as the repository for electronic storage of New Production Delivery (NPD) information.

5.21.2 System Description. The NPD is a web application that provides program personnel the ability to store new production delivery quantities and maintenance due-ins in a centralized location via their web browser. NPD accepts input of new production delivery data as it relates to NALC/DODICs and supplies maintenance models with new production delivery data. The application provides on-line edits, dropdown lists and automatic inclusion of appropriate data from the core database to facilitate the entry of each line item. The line item contains a single DODIC which the new production and/or maintenance dues-ins quantities are entered against. Data entered into the application is used to feed directly into the maintenance models, Ordnance Assessment (OA) planning, and ALWT applications. Additionally data is used to feed NAVAIR Management New Production Delivery Metric reports. This application is composed of three basic areas which are detailed below.

5.21.2.1 Line Items. This area allows users to add new items for which to track new production and maintenance due in quantities.

5.21.2.2 Deliveries. This area allows users to update planned and actual new production and maintenance due-in quantities. by year and month. Quantities are entered in months for the current and subsequent fiscal year and annually for the remaining out-years.

5.21.2.3 Reports. There are four reports available, as detailed below.

5.21.2.3.1 POC Report. This report lists application users and their associated titles.

5.21.2.3.2 Production Delivery Comments. This report displays any explanatory comments entered for planned or actual delivery quantities.

5.21.2.3.3 New Production Deliveries Report. This report displays planned and/or actual delivery quantities for each line item, by weapon system. Data is displayed quarterly for the current and next fiscal year, and annually for the remaining out-years. This report is delivered automatically on the 7th of each month to requesting users.

5.21.2.3.4 Maintenance Due-Ins Report. This report displays planned and actual quantities for scheduled maintenance renovations. The report displays information by quarter for the current and next fiscal year, and annually for the remaining out-years.

5.21.3 Responsibilities.

5.21.3.1 The NAWCWD AWIS Project Team provides system administration for the module. User administration is through the common AWIS user administration process.

5.21.3.2 User with Read-Only level access can view reports only.

5.21.3.3 Users with Read Write level access can view reports, update new production and maintenance due-in quantities, and enter new line items.

CHAPTER 5.22

Ordnance Load Out Planning Module

Table of Contents

Paragraph	Subject	Page
5.22.1	General	5-22-1
5.22.2	System Description	5-22-1
5.22.3	Responsibilities	5-22-2

CHAPTER 5.22

Ordnance Load Out Planning Module

5.22.1 General. COMNAVAIRSYSCOM has designated NAVAIRWARCENWPNDIV to develop and maintain a module to be utilized for the Load Out Planning for CVN's. OLOM user rights and profiles are constrained by program job responsibilities. The OLOM application resides on a secure website. A username and password can be obtained by visiting the AWIS website at https://awis.navair.navy.mil.

5.22.2 System Description. The OLOM application permits users to forecast load out capability of ordnance equipment for CVN's. To accomplish this forecasting, it uses information from ROLMS/OIS inventory list, NCEA application, and New Production Database application. The application uses a defined set of rules to distribute the available assets among the carriers specified by the user, varied by the specifications set by the user for a particular run. This application is composed of three basic functions which are detailed below.

5.22.2.1 Set Up. This area allows an administration level user to define the default values to use for a newly created run. These values include a prioritized list of carriers, a list of condition codes to be considered serviceable, a list or priority codes to be considered available for load out, lists of Maintenance Planning System (MPS) and Beddown locations from which ordnance should not be removed, a list of CONUS locations to use when the run specifies that ordnance should only come from CONUS locations, a list of acceptable substitute NALCs when a lead NALC is unavailable, and the default number of each NALC to be loaded for each ship type.

5.22.2.2 Run Model. This allows a user to create a new load out run, to modify any of the default lists to specify specific conditions for the run, and run the model to produce reports.

5.22.2.3 Reports. This allows the user to view reports from any of the load out runs. There are 5 reports produced for each run, as specified below.

5.22.2.3.1 Short Report. This report specifies any NALCs for each ship which would be short of the specified load out quantity based on the selected run conditions.

5.22.2.3.2 Ship Loadout. This reports produces a color coded display showing which ships would be at least 90% loaded out (green), at least 80% loaded out (yellow) or less than 80% loaded out (red) based on the selected run conditions.

5.22.2.3.3 Total Loadout. This report will display the actual forecasted loadout quantities by NALC for each ship based on the selected run conditions.

5.22.2.3.4 Condition Codes. This report is not specific to a run; it is merely a list of conditions codes and their definitions, to be used when selecting condition codes to be included as serviceable assets.

5.22.2.3.5 Purpose Codes. This report is not specific to a run, it is a list of purpose codes and their definitions, to be used when selecting purpose codes to be included as selectable assets.

5.22.3 Responsibilities.

5.22.3.1 The NAWCWD AWIS Project Team provides system administration for the module. User administration is through the common AWIS user administration process.

5.22.3.2 User with Model level access can modify existing or create new model runs, and view reports.

5.22.3.3 Users with Administrator level access can modify existing or create new model runs, view reports, and modify the default model set up lists.

SECTION 6

Training

Table of Contents

Chapter	Subject	Page
6.1	Introduction	6-1-1
6.2	Weapon System Acquisition and Training	6-2-1
6.3	Ordnance Training/Qualification/Certification	6-3-1
6.4	Systems Acquisition Training	6-4-1
6.5	Ordnance Specialty Training	6-5-1

CHAPTER 6.1

Introduction

Table of Contents

Paragraph	Subject	Page
6.1.1	General	6-1-1
6.1.2	Purpose and Scope	6-1-1
6.1.3	Training Concept	6-1-1
6.1.4	Training Evaluation. Navy Feedback Program	6-1-2

CHAPTER 6.1

Introduction

6.1.1 General. Early planning for training is mandated by Department of Defense Instruction (DODI) 5000.2, the Defense Acquisition System. As an element of Integrated Logistics Support (ILS), weapon system training includes the processes, procedures, techniques, training devices, and equipment used to train civilian and active duty and reserve military personnel to operate, maintain, and support the system. This chapter describes the origin and development of Naval Ordnance Management Policy (NOMP) training requirements, and the methodology used to satisfy those requirements. In essence, NOMP training is a component of the Naval Aviation Training Program. Accordingly the NOMP training process reflects the policies, responsibilities, and procedures prescribed therein regarding initial and continuation training.

6.1.2 Purpose and Scope. This section establishes NOMP training doctrine and procedures designed to attain the degree of personnel expertise necessary to realize maximum weapon system effectiveness. It is applicable to all levels of weapons maintenance and supporting activities assigned responsibilities under this manual.

a. Maintenance training maintains and increases technical knowledge and proficiency.

b. Formal training is any training with an approved course curriculum.

c. Lectures, Computer Base Training (CBT), videotapes/films, Personnel Qualification Standards (PQS), required reading, and On-the-Job Training (OJT) are integral components and must be coordinated to satisfy each individuals activity's particular requirements.

d. OJT consist of personnel performing maintenance tasks by demonstration and simulation, under the supervision of designated, qualified personnel. A well-defined and comprehensive OJT syllabus will ensure maintenance personnel receive the training and acquire the skills necessary to meet the commands operational commitments.

e. Navy and Marine Corps training records will be maintained in accordance with the TYCOM Directives.

6.1.3 Training Concept. As an element of the ILS process, weapon system training is a product of concurrent engineering efforts which begin in the earliest acquisition phases and is interactively modified as the system design matures. Training requirements are derived from weapon system life cycle ILS planning and the assessment of projected force structures which include considerations such as number and type of units to be equipped, quantity and quality (skill level) of each occupational specialty or job series of personnel in each manpower category, and required manning levels per site. Maintenance and support manpower requirements must be consistent with the weapon system's maintenance concept expressed in the respective ILS documentation. The NOMP training concept is a disciplined evaluation of educational requirements based on Organizational, Intermediate, and Depot level support objectives from initial to

full operational capability. To that end, all initial training shall have been identified, programmed, budgeted, and accomplished by not later than Fleet introduction of the weapon system. Subsequent training shall be conducted to maintain skill currency necessitated by weapon system design modifications and to sustain steady state occupational specialty manning levels.

6.1.4 Training Evaluation. Navy Feedback Program. Training feedback from the Fleet customer is crucial to the assessment and validation of training. Naval Education and Training Command (NETC) wants to hear from our customers on any training issues and concerns. The goal is to ensure training is relevant and responsive to the actual job performance skills required of our graduates transitioning to the Fleet. The Navy Training Feedback Program is one avenue for active-duty and Reserve military, and civilian personnel to communicate training issues directly to NETC, the NETC Learning Centers, the NETC Training Support Centers (TSC) and the Center Elements at specific sites (schoolhouse or a training command) where the training was conducted.

CHAPTER 6.2

Weapon System Acquisition and Training

Table of Contents

Paragraph	Subject	Page
6.2.1	Weapon System Acquisition	6-2-1
6.2.2	Training System Development	6-2-1
6.2.3	Training System Funding Support	6-2-1
6.2.4	Training System	6-2-3
6.2.5	Post Production Management of Naval Weapons Training System	6-2-7

List of Illustrations

Figure	Title	Page
6-2-1	Naval Aviation Acquisition Structure	6-2-2
6-2-2	ALW Training Equipment Summary	6-2-5
6-2-3	AO E-Learning Course Listing	6-2-6
6-2-4	Mediatrax Course Listing	6-2-8

CHAPTER 6.2

Weapon System Acquisition and Training

6.2.1 Weapon System Acquisition. The procurement of new weapon systems is accomplished by a comprehensive and methodical procedure known as the acquisition process. Department of Defense Directive (DODD) 5000.1, Defense Acquisition, establishes a disciplined management approach for acquiring systems and material that satisfy the operational users needs. Mission needs are first assessed to determine if they can be satisfied by nonmaterial solutions (e.g., changes in doctrine, operational concepts, tactics, training, or organization). If approved as a "new start" acquisition program, operational performance requirements are progressively evolved from broad capability needs to system-specific performance and support requirements (e.g., range, speed, weight, reliability, maintainability, availability, and interoperability). The acquisition process is structured in discrete phases separated by major decision points (i.e., milestones). One element of the milestone decision review is to verify that training requirements have been assessed to influence weapon system design, optimize the selection of training alternatives, and ensure that system source data is available for the timely development of training system equipment and courseware. Concurrent engineering provides the means for ensuring that manpower, personnel, health hazard, safety, and training concerns identified under ILS endeavors are translated into man-machine interface issues that are addressed during system design efforts.

6.2.2 Training System Development. A Program Executive Officer (PEO) is assigned responsibility for the conduct of each approved acquisition. Figure 6-2-1 illustrates basic organizational relationships within the Department of the Navy (DON). The Commander, Naval Air Systems Command (COMNAVAIRSYSCOM) Training Systems Program Manager-Aviation (PMA-205) is tasked to provide life cycle training support for COMNAVAIRSYSCOM sponsored weapon systems. Through close collaboration with the respective PEO, PMA-205 participates in the various acquisition program reviews, ILS meetings, and planning conferences which may influence training. Existing training resources are evaluated to determine their ability to support identified training needs. Requirements for new or additional training resources based on peacetime operating tempos, as well as surge and mobilization, are identified.

6.2.3 Training System Funding Support. Acquisition programs are categorized in terms of their total dollar costs and other criteria established by the Secretary of Defense (SECDEF). Budgetary requirements for training system acquisition programs are developed by PMA-205 through use of the Department of Defense (DOD) Planning, Programming, and Budgeting System (PPBS). The data used by the Defense Planning and Resources Board to develop budgetary requirements for "new start" programs and for continued financial support of on-going, multiyear procurements is provided to the respective PMAs for inclusion in the overall ILS funding requirements. The three-phased PPBS process prescribed by DODD 5000.1 is used to allocate limited resources between many competing DOD requirements. Its products provide the basis for making informed affordability assessments and resource allocation decisions on defense acquisition programs. The planning phase results in the development of broad, long-range

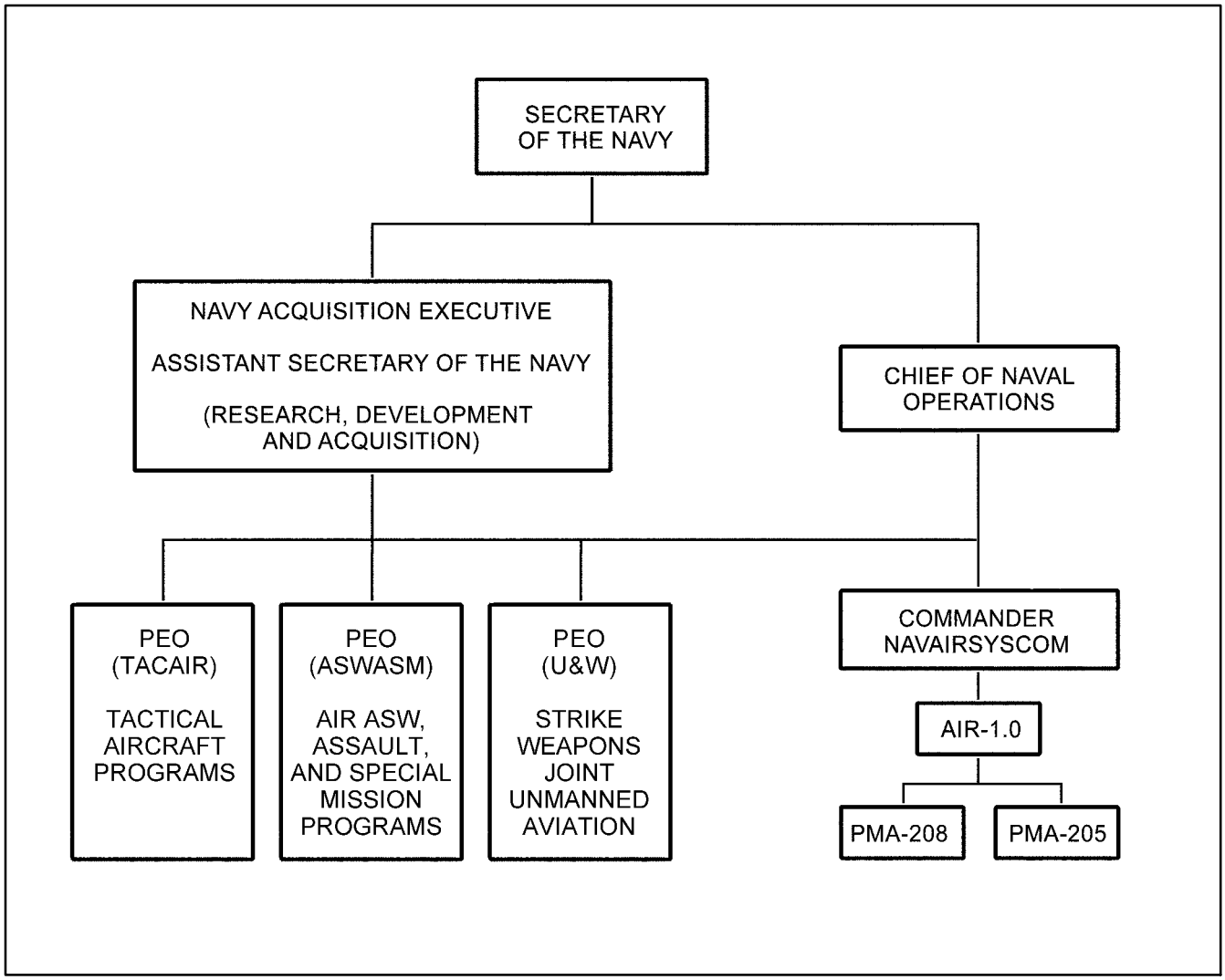

Figure 6-2-1. Naval Aviation Acquisition Structure

investment plans for each DOD component. Defense planning guidance that identifies priority operational objectives and required resources is used during the programming phase to develop a 6-year Defense Program for each DOD component and the DOD as a whole. The 6-year Defense Program integrates national policies, strategy, and objectives to specific forces and major programs, including acquisitions. The 6-year program proposal of each DOD component are incorporated into the Program Objectives Memorandum (POM) described earlier in Volume I, Chapter 1.2. The budgeting phase results in development of the SECDEFs recommendations to the President for the administration's biennial budget request for the DOD. The POM is the primary document used by PMA-205 for training system funding support.

6.2.4 Training System. The Weapons/Ordnance Training System incorporates all aspects of training necessary for the employment of the parent weapon system. This includes materials required for conducting classroom training, media presentation equipment, practical training equipment, (e.g., shapes, trainers, and drones), instructors and administrative personnel, training facilities (e.g., schools, ranges, and targets), and related support services.

6.2.4.1 The total training system is designed to support all training necessary for the effective employment of the parent weapon system throughout its life cycle. This includes weapon system operation, maintenance, handling, evaluation, certification, and disposal. A training system may be tailored to satisfy the needs if a particular user such as an authorized Foreign Military Sales (FMS) case, joint service use, or to support operational evaluation and certification efforts.

6.2.4.2 Training program materials are developed under a systematic process referred to as Instructional System Design (ISD). The initial ISD phase provides for an analysis of the mission and jobs to be accomplished. A resulting task inventory is then further developed to identify knowledge and skills requirements, and to specify those personnel requiring training. The products of this analysis include a program development and management plan, an implementation plan, a situation analysis report, a weapon system-unique training plan, and a media selection model. In the second phase of ISD, training tasks are converted into learning objectives, sequenced training, course outlines, instructional media, trainee test and evaluation criteria, facilities, and support resources requirements.

6.2.4.3 System life-cycle training serves to fulfill the following requirements:

a. Technical Evaluation (TECHEVAL). Typically, the contractor provides training to selected training team members 30 days prior to TECHEVAL commencement. This normally includes training for system and peculiar support equipment operators, Organizational and Intermediate level maintenance personnel, Fleet Weapons Support Team (FWST), and Explosive Ordnance Disposal (EOD) team members.

b. Operational Evaluation (OPEVAL). Thirty days prior to commencement, training is provided by FWST to personnel designated to participate in the OPEVAL (e.g., flight crew, ground crew, and maintenance personnel).

c. Initial Training. Provided by FWST instructors 6 months prior to Initial Operating Capability (IOC), initial training includes operator and maintenance training described above with the addition of Depot level maintenance, if appropriate.

d. Follow-on Training. To sustain adequate levels of qualified personnel, Fleet instructors at formal training activities provide follow-on training for weapon system operators, maintenance personnel, and EOD team members.

e. OJT. Operator, maintenance, and EOD personnel OJT is conducted by user activities on a continuing basis.

6.2.4.4 Training system equipment is identified and developed as an adjunct to a Work Breakdown Structure (WBS) generated during acquisition development and production phase engineering studies. Training equipment products addressed by the WBS process include training shapes, simulators, emulators, audio/video/film media equipment, and associated hardware and software. Figure 6-2-2 provides a summary of weapons trainer configurations described below:

a. The Dummy Air Training Missile (DATM) is an inert training device that replicates tactical missile external configuration in weight, size, and Center of Gravity (CG) characteristics. The DATM is used to train weapon assembly and loading personnel in the proper procedures for canning, decanning, handling, assembly, and loading. For the case of Joint Direct Attack Munition (JDAM) and Laser JDAM, a DATM is referred to as a D-2 or Load Trainer.

b. The Captive Air Training Missile (CATM) replicates the tactical missile configuration and typically has a tactical guidance and control section, inert propulsion section, inert warhead, and a training or tactical target detector (depending on the specific missile system). The CATM is used for aircrew tactical flight training consisting of cockpit switchology, targeting, and combat air training against simulated enemy targets. CATMs are also used to train test equipment operators and limited numbers are equipped with in-flight data recorders to support test and evaluation exercises.

c. The Special Test Air Training Missile (NATM)/Air Training Missile (ATM) is a firing version of the missile with the warhead replaced by a telemetry section. The NATM/ATM is used for test, evaluation, and specialized aircrew tactical training on instrumented firing ranges. Telemetered data is analyzed to determine captive flight, target acquisition/tracking, missile launch, and target intercept missile performance characteristics.

d. The Classroom EOD Systems Trainer (CEST) is a full-scale tactical weapon mock-up that is cut away to expose those areas requiring performance of Render-Safe Procedures. The CEST provides realistic training through access to and removal of explosive, hazardous, and classified components. External markings are identical to those used on the tactical weapon.

e. The Practical EOD System Trainer (PEST) is a full-scale mock-up that approximates the weight, CG, external markings, and physical characteristics of the respective tactical weapon. Areas relevant to RSP have the same internal configuration as the tactical weapon. The PEST is used to train EOD technicians the disarming and safing procedures for fuzes, warheads, propulsion sections, detonators, safe/arm devices, pyrotechnics, and other hazardous components.

f. “Navy E-Learning is the preferred method to access Interactive Courseware (ICW) so usage can be documented in the Electronic Training Jacket through Navy Training Management Planning System (NTMPS). Figure 6-2-3 provides a listing of Aviation Ordnance (AO) E-Learning Courses.

PMA	NOM.	WEAPON SYSTEM	ATM/N ATM	CATM	DATM/ LDT	PEST	CEST	CMBRE TMAP
A	AIM-120	AMRAAM	X	X	X			X
C	AGM-88	HARM	X	X	X		X	
C	AGM-88E	AARGM		X	X			X
B	AGM-84C	HARPOON	X	X	X	X	X	
C	AGM-114	HELLFIRE		X	X	X	X	
C	AGM-65E	MAVERICK		X	X	X	X	
C	AGM-65F	MAVERICK		X	X	X	X	
A	AIM-9M	SIDEWINDER	X	X	X			
A	AIM-9X	SIDEWINDER	X	X	X	X	X	X
B	AGM-84K	SLAM-ER	X	X	X	X	X	X
A	AIM-7M/P	SPARROW	X	X				
C	BGM-71	TOW			X			
B	GBU-31(V)4	JDAM 109			X	X		
B	GBU-31(V)2	JDAM 84			X	X		
B	GBU-32(V)2	JDAM 83			X	X		
B	GBU-38(V)2	JDAM 82			X	X		
B	GBU-54(V)2	LJDAM			X	X		
B	GBU-12F/53	DMLGB			X			X
B	GBU-10	PAVEWAY II						
B	GBU-12	PAVEWAY II						
B	GBU-16	PAVEWAY II						
B	GBU-24	PAVEWAY III			X			
B	AGM-154	JSOW		X	X			
B	GBU-TBD	SDB II			X	X	X	X
C	HYDRA	2.75”Rockets						
C	ZUNI	5”Rockets			X			
	MK20	Rockeye			X			
	CBU-78	GATOR			X			
	CBU-99	Rockeye II						
	CBU-100	Rockeye II						

NOTES:

A = PMA 259
B = PMA 201
C = PMA 242
Gray = Planned

Figure 6-2-2. ALW Training Equipment Summary

TITLE	ILE CATALOG CODE
AH-1 20mm Gun Boresight	CNATT-020-075-010-042-A0
AH-1 20mm Gun System Arm and De-Arm	CNATT-020-075-008-023-A0
AH-1 AIM-9 System Arm and De-Arm	CNATT-020-075-010-039-A0
AH-1 ALE-47 System Load and Test	CNATT-020-076-010-038-A0
AH-1 Countermeasures Systems Operation, Test, Troubleshooting	CNATT-020-076-010-015-A0
AH-1 Hellfire System Arm and De-Arm	CNATT-020-075-010-036-A0
AH-1 Rocket System Arm and De-Arm And Jettison System Test	CNATT-020-075-010-037-A0
AH-1 TOW Boresight With TOW System Evaluation Missile (TSEM)	CNATT-020-075-010-040-A0
AH-1 TOW System Arm and De-Arm	CNATT-020-075-008-024-A0
AH-1 Weapons Boresight Verification Device	CNATT-020-075-010-041-A0
Airborne Expendable Countermeasures (AECM)	CNATT-002-ACM-503-001-B0
AMTCS UH-1N .50 Caliber Machine Gun	CNATT-020-075-011-025-A0
AMTCS UH-1N AN/ALE-39 Countermeasures Dispensing System (CMDS)	CNATT-020-076-011-021-A0
AMTCS UH-1N AN/ALE-39 Countermeasures Dispensing System (CMDS)	CNATT-020-076-011-024-A0
AMTCS UH-1N GAU-17/A Aircraft Machine Gun	CNATT-020-075-011-023-A0
AMTCS UH-1N M240 Machine Gun	CNATT-020-075-011-022-A0
AV8B DMLGB O-Level Maintenance Training Course	CNATT-002-LGB-505-001-A0
F/A-18 DMLGB O-Level Maintenance Training Course	CNATT-002-LGB-505-003-A0
F18AB Maintenance M61A1 20mm Gun System Loading and Downloading	CNATT-015-075-008-036-A0
FA-18 E/F ALE-47 Countermeasures Dispensing System	CNATT-044-076-501-088-A0
FA-18 E/F ALE-50 Countermeasures Dispensing Decoy System	CNATT-044-076-501-077-A0
H60 Maintenance AMTCS AGM-114 Hellfire Loading/Unloading Training	CNATT-022-075-014-032-A0
H60 Maintenance AMTCS M-60D Training	CNATT-022-075-014-025-A0
H60 Maintenance CHAFF/FLARES Loading	CNATT-022-076-014-030-A0
H60 Maintenance GAU-16/A Aircraft Machine Gun	CNATT-022-075-014-026-A0
H60 Maintenance M-240 Machine Gun (MG)	CNATT-022-075-014-033-A0
Hazardous Material / Explosives Driver	CNATT-HMED-010
Joint Direct Attack Munitions (JDAM) Intermediate-Level Maintenance	CNATT-002-ATG-501-002-AO
LAU-7C/A and LAU-7D/A Guided Missile Launcher (Intermediate Level) Maintenance	NAVAIR-LAU7I-0001.2
LAU-7C/A and LAU-7D/A Guided Missile Launcher (Organizational Level) Maintenance	NAVAIR-LAU7O-0001.2
Linkless Ammunition Loading System (LALS) III Loading on the F/A-18 Aircraft	CNATT-002-ALM-508-002-AO
Linkless Ammunition Loading System (LALS) II O-Level Maintenance Training Course	CNATT-002-ALM-502-002-A0
Linkless Ammunition Loading System (LALS) II I-Level Maintenance Training Course	CNATT-002-ALM-502-001-A0
Linkless Ammuntion Loading System (LALS) III Intermediate-Level Maintenance	CNATT-002-ALM-508-001-AO
Receipt, Segregation, Storage, and Issue - RSSI	NAVAIR-SASM-2.0
Receipt, Segregation, Storage, and Issue - RSSI	NAVAIR-SASM-2.0
Sidewinder AIM-9X Intermediate Maintenance Training	NAVAIR-AIM9X-1.0

NOTES:

The link for all courses is: https://ile-deers.nko.navy.mil/nel

Figure 6-2-3. AO E-Learning Course Listing

g. Media Trax is an on-line Interactive Multimedia Instruction (IMI) repository for aviation maintenance content designed for NAVAIRSYSCOM in support of CNATT. MediaTrax provides one stop shopping for Naval Aviation Maintenance IMI Training courses. MediaTrax CBT tracking number is CBT. They can be ordered and shipped to your Ship, Squadron, or Unit to be used for scheduled or unscheduled training. Figure 6-2-4 provides a listing of MediaTrax Courses.

6.2.5 Post Production Management of Naval Weapons Training Systems. Post production management is implemented following the final procurement of the prime weapon system and when no further procurement is planned. Training post production support planning is based upon the requirements and concepts established by the ILS process and contained in the respective weapon system's Support planning document. Planning elements presented at ILS reviews and updated thought the system's entire life cycle include post production management of trainers, training weapons, technical support, maintenance, and advisory services for operational and training activities. An updated support plan is prepared before the production phase-out contract is awarded and funding for post production support will be a separate line item.

TITLE	CTN
2.75 Inch Rocket System	002-R-001-001-1.0-R
A-6E Armament System	002-R-002-001-1.0-R
Airborne Expendable countermeasures (AECM)	002-R-011-001-1.0-R
Airborne Expendable countermeasures (AECM)	002-R-503-001-1.0-R
AMRAAM AIM-120 A/B/C/C-4/C-5/C-6/C-7 Loading and Handling Training	002-R-009-003-1.0-R
AMRAAM AIM-20 Loading and Handling	002-R-501-003-1.0-R
AMTCS I-Level Ordnance - CRALTS	002-R-013-001-1.2-R
AMTCS I-Level Ordnance 20 MM Gun	002-R-013-002-1.1-R
AMTCS Ordnance and Test Front End Analysis	002-S-013-008-1.0-R
AN/AWM-103 Familiarization	002-R-500-001-1.0-R
Basics of Naval Explosives Hazard control, AMMO-18 and Naval Explosives Safety Supervisors/Managers Orientation, AMM	002-R-014-001-1.0-R
Basics of Naval Explosives Hazard Control, AMMO-C-21 and Naval Explosives Safety/Supervisors/Managers Orientation, AMMO-C-25	002-R-009-001-1.0-R
Dual Mode Laser Guided Bomb (DMLGB) Organizational and Intermediate Training Course	002-R-505-001-1.0-R
FLIR/HELLFIRE System	002-R-006-008-1.1-R
H-1 Ordnance (AO Phase)	002-R-010-001-1.0-R
HH-60H FLIR/HELLFIRE System	002-R-006-007-1.1-R
HH-60H Seahawk FLIR/HELLFIRE System	002-R-006-005-1.0-R
HH-60H Seahawk FLIR/HELLFIRE System	002-R-006-006-1.0-R
JDAM Intermediate Maintenance Training	002-R-501-002-1.0-R
Joint Standoff Weapon (JSOW) Common Munitions Reprogramming Equipment (CMBRE) Testing/Reprogramming Procedures	002-R-504-001-1.0-R
LALS II Intermediate (I-Level) Maintenance	002-R-502-001-1.0-R
LALS II Organizational (O-Level) Maintenance	002-R-502-002-1.0-R
LAU-138A/A Guided Missile Launcher Set	002-R-004-001-1.0-R
Ordnance Assembly of the BRU-32 Ejector Breech Assembly	002-R-015-010-1.0-R
Ordnance Assembly of the BRU-32 Ejector Housing Assembly	002-R-015-008-1.0-R
Ordnance Assembly of the BRU-32 Ejector Rack Assembly	002-R-015-005-1.0-R
Ordnance BRU-32 Cleaning, Inspection and Preparation for Shipment	002-R-015-013-1.0-R
Ordnance BRU-32 Ejector Rack Assembly Adjustment	002-R-015-006-1.0-R
Ordnance BRU-32 Testing and Troubleshooting Part I	002-R-015-014-1.0-R
Ordnance BRU-32 Testing and Troubleshooting Part II	002-R-015-015-1.0-R
Ordnance disassembly & Assembly of the BRU-32 Auxiliary Release Breech Assembly	002-R-015-012-1.0-R
Ordnance disassembly & Assembly of the BRU-32 Ejector Rack Swaybrace Assembly	002-R-015-011-1.0-R
Ordnance disassembly of the BRU-32 Ejector Breech Assembly	002-R-015-009-1.0-R
Ordnance disassembly of the BRU-32 Ejector Housing Assembly	002-R-015-007-1.0-R
Ordnance disassembly of the BRU-32 Ejector Rack Assembly Part I	002-R-015-003-1.0-R
Ordnance disassembly of the BRU-32 Ejector Rack Assembly Part II	002-R-015-004-1.0-R
Ordnance Introduction to the CRALTS	002-R-015-001-1.0-R
Ordnance Principles of Operation for the BRU-32	002-R-015-002-1.0-R
Precision Guided Weapons I Level Maintenance	002-R-008-001-1.0-R
Quickstrike Mines AECM	002-R-012-001-1.0-R
SH-60B FLIR/HELLFIRE Run time Lessons, 4 and 5	002-R-007-002-1.0-R
SH-60B Seahawk FLIR/HELLFIRE System	002-R-007-001-1.0-R
Sidewinder AIM-9X Intermediate Maintenance	002-R-501-001-1.0-R
Standoff Land Attack Missile Expanded Response (SLAM-ER) AGM-84K	002-R-504-002-1.0-R

Figure 6-2-4. MediaTrax Course Listing

CHAPTER 6.3

Ordnance Training/Qualification/Certification

Table of Contents

Paragraph	Subject	Page
6.3.1	General	6-3-1
6.3.2	Purpose and Scope	6-3-1
6.3.3	Personnel Training and Qualification	6-3-1
6.3.4	The Navy Training System Plan	6-3-1
6.3.5	Training Tracks	6-3-1
6.3.6	Training Requirements	6-3-2
6.3.7	Personnel Classification Systems	6-3-4
6.3.8	Funding	6-3-7
6.3.9	Aircraft/Aircraft Systems Engineering Technical Services Program	6-3-7
6.3.10	Weapons/Weapon Systems ETS Program	6-3-9
6.3.11	Center for Naval Aviation Technical Training	6-3-11
6.3.12	Training Publications	6-3-12
6.3.13	Training Program Evaluation and Improvement	6-3-12
6.3.14	Purpose	6-3-13

List of Illustrations

Figure	Title	Page
6-3-1	Ordnance Handlers Listing of Schools	6-3-5
6-3-2	Weapons Maintenance Related Specialty Skills	6-3-8
6-3-3	U.S. Marine Corps Aviation Ordnance Military Occupational Specialties	6-3-8
6-3-4	Navy Officer Billet Codes	6-3-8

CHAPTER 6.3

Ordnance Training/Qualification/Certification

6.3.1 General. The DON Explosives Safety Policy Manual, OPNAVINST 8020.14/MCO P8020.11, promulgates the Explosives Handling Personnel Qualification and Certification (QUAL/CERT) program. It directs Fleet Commanders (FLTCOMs) to implement and coordinate the program among the various Type and Operational Commanders.

6.3.2 Purpose and Scope. The QUAL/CERT program is designed to ensure that all Navy, Marine Corps, and civilians required to handle explosives or explosive actuated devices are fully trained and qualified to perform all functions and tasks safely. Prior to performing said functions and tasks, each person within the scope of the program shall be certified by the command or organizational unit to which assigned.

6.3.3 Personnel Training and Qualification. Formal training provides the requisite knowledge and Practical Job Training (PJT) that form the basis for the qualification phase. When formal training is not available for weapons subject to this manual, a training shortfall shall be identified. The parent activity is responsible for subsequent inservice OJT and certification. Final certification is dependent upon the commands QUAL/CERT Board recommendation for approval based on a review of the candidate's training record, an examination of the individual's technical knowledge, and observation of satisfactorily demonstrated skills. Except as authorized by OPNAVINST 8020.14/MCO P8020.11 only inert devices shall be used for QUAL/CERT training and examination. Supplementary information is provided by NAVEDTRA 43202, Nonnuclear Explosive Ordnance Shipboard Handling and Stowage Personnel Qualification Standards (PQS).

6.3.4 The Navy Training System Plan. A product of the acquisition process described in Chapter 6.2, the Navy Training System Plan (NTSP) is an official statement of billets, personnel, and training resource requirements needed to support the introduction and life cycle operational use of a weapon system. New and revised NTSPs are provided to affected Type Commanders (TYCOMs) for review and identification of training shortfalls early in the weapon acquisition/upgrade process. The OPNAV Training Management System (OTMS) serves as the single point of reference for NTSP status. The NTSP assigns responsibilities for planning, programming, and implementing actions necessary to:

a. Ensure coordination of billets, personnel, military construction, training support, and training planning concurrently with hardware/software development and production.

b. Provide efficient and adequate training programs phased with initial weapon system introduction and subsequent modifications.

c. Support higher authority policies established for Naval weapon system acquisition.

6.3.5 Training Tracks. The Chief of Naval Education and Training (CNET) provides formal Navy Training School instruction for officer and enlisted personnel. Fleet training begins with

a person's service entry and continues through various training courses with eventual assignment to a Naval activity. Course content, scope, depth, and length are tailored to provide the technical knowledge and skills required to meet the respective weapon system's handling and maintenance requirements. Training is accomplished sequentially with basic courses providing knowledge and skills required for subsequent training that establishes a proper foundation for final QUAL/CERT endorsement by the parent command. Formal classroom training is enhanced by the practical application of learned skills in a structured work environment (i.e., PJT).

6.3.6 Training Requirements. Training is tailored to the specific functions performed by the designated activity. With respect to the NOMP, personnel are trained, qualified, and certified commensurate with their assigned maintenance level. As a minimum, all personnel tasked to perform or support weapons maintenance shall be instructed in the general provisions of the NOMP, and segments relevant to their duties shall be directed as required reading. In general, the following operational and maintenance requirements derived from acquisition program task analysis pertain.

a. Organizational Level. Aircraft and weapon system inspections, release/control system checks, weapon uploading, testing, arming/dearming, downloading, deficiency reporting, TDs, and logbook maintenance. The Center for Naval Aviation Technical Training Unit provides aircraft armament systems skills through course presented by detachment personnel. Fleet Aviation Specialized Operational Training Group (FASOTRAGRU), under aircraft controlling custodian and/or TYCOM direction, provides training in operational and tactical employment of specific equipment and systems, as well as maintenance related administration and management. Classroom instruction is augmented by hands-on reinforcement on specialized training devices and equipment which realistically simulate the actual weapon system without unduly hazarding the trainees, instructors, or equipment. F/A-18 aircraft loading courses provided by Strike Fighter Weapons School Atlantic/Pacific (STRKFIGHTWPNSCOLANT/PAC) for Navy personnel. Marine Corps personnel receive weapons familiarization and loading training from Center for Naval Aviation Technical Training (CNATT) for the AH-1, AV-8B, F/A-18, and UH-1 aircraft. This structured training process relieves the unit Commanding Officer of the responsibility for creating a local training program to achieve the basic qualifications for final QUAL/CERT.

b. Intermediate Level. Weapon system and support equipment requisitioning, receipt inspection, storage and handling, unpackaging, cleaning, preservation and touchup painting, installation/removal of wings and fins, ready-service inspection, built-in-test, deficiency reporting, logbook maintenance, packaging, shipping, technical directive implementation, and record keeping/reporting. Naval weapons maintenance unit functions include All-Up-Round (AUR) inspection and diagnostic testing, disassembly, replacement of failed sections and external components, assembly, missile refurbishment, and recertification. In addition to the maintenance training available via CNATT, Intermediate level training is augmented through the use of FWST personnel provided by the Naval Air Warfare Center Weapons Division (NAVAIRWARCENWPNDIV), on request/demand.

c. Depot Level.

(1) Naval Weapons Support Facility-AUR and support equipment inspection, fault isolation test, disassembly, repair by replacement of failed sections and external components, preservation

and painting, decals/markings, modifications, technical directive implementation, assembly, re-certification, record keeping/reporting, and minor container repair as prescribed by the respective weapon system's Industrial Processing Guide. Training availability is similar to that described above.

(2) Designated Overhaul Point (DOP) component receipt inspection, unpackaging, fault verification testing, fault isolation testing, complete overhaul and major repair using recognized and industrially approved methods, technical directive implementation, modifications, painting, packaging, preservation, and record keeping/reporting. Normally, Fleet Readiness Center (FRC) training is initially provided on-site by qualified Contractor Engineering Technical Services (CETS) personnel in conjunction with new weapon system contractual requirements. Alternatively, NCTS personnel who have received factory training at the manufacturer's location provide on-site training for FRC personnel. Subsequent training is usually provided by experienced and qualified FRC maintenance personnel. The respective DOP is responsible for maintaining a skilled work force, including initial training of new personnel. On request, FRCs also conduct short duration training for Fleet and shore activities with respect to troubleshooting, alignment, specialized procedures, and bench work on various accessories and components.

6.3.6.1 The Aviation Ordnance Officer Career Progression (AOOCP) instruction creates a training path which begins immediately following accession training and culminates in specialized training in preparation for increased levels of responsibility and authority associated with Aviation Ordnance management. Training is intended to build incrementally on previously acquired skills and to provide graduated educational and professional career paths for Aviation Ordnance Officers. This training is also available to senior enlisted ordnance personnel Navy/Marine Corps (E6, E7, E8, and E9) and EOD personnel. The AOOCP training is conducted in three levels, commencing with specialized training commensurate with increased levels of responsibilities and authority associated with career progression. Level I training is designed for newly commissioned ordnance limited duty and Chief Warrant Officers. Newly commissioned or designated Ordnance Officers shall en-route to their first billet assignment be ordered to attend AOOCP Level I training. Level II instruction is targeted at Ordnance Officers and senior enlisted ordnance personnel who are at their mid-career point. Level III is intended for Ordnance Officers and senior enlisted ordnance personnel who are at their upper career point. The AOOCP instruction is structured, comprehensive training program to standardize and expand upon the level of expertise of Ordnance Officers and senior enlisted ordnance personnel. Refer to the Catalog of Navy Training Courses (CANTRAC), for additional course information, including course numbers, convening schedules.

6.3.6.2 Other formal and locally developed training courses related to the weapons QUAL/CERT program include the following:

a. Personnel assigned responsibilities for the requisitioning and accounting of ammunition should attend the ordnance logistics management course.

b. Personnel designated to be on/off-station explosives drivers will successfully complete a local station course as defined in NAVSEA SW020-AF-ABK-010.

c. Mobile crane and forklift operator training per NAVFAC P-300 is conducted ashore by public works departments.

d. Personnel designated to direct the off-station transportation of ammunition and those selected to inspect/certify motor vehicles or rail cars for transporting explosives shall be trained in accordance with NAVSEA SW020-AC-SAF-010.

e. Operators of mobile ground support equipment used to load aircraft shall be trained and licensed in accordance with COMNAVAIRFORINST 4790.2 series.

f. Ordnance personnel assigned flight deck duties shall attend the shipboard air launched weapons general course.

g. See Figure 6-3-1 Ordnance Handlers Listing of Schools.

6.3.6.3 Underway training for Aircraft Carrier Battle Group (CVBG) and Maritime Amphibious Readiness Group (MARG) ordnance, weapons, deck, and combat systems personnel is unique because of significant differences from shore activity environments. Afloat duties are driven by operational demands that vary in scope and intensity with the prevailing phase of workup training or the actual combat scenario. Therefore, OJT for CVBG/MARG personnel can be sporadic and somewhat unpredictable. Carrier Air Wings (CVW) and Air Combat Elements (ACE) embarked on L-form ships (e.g., LHA/LHD) begin their training efforts subsequent to the respective squadrons' post-deployment stand-downs. The ship, on the other hand, undergoes modernization and repair at an industrial activity prior to commencing workup leaving little opportunity for the ship's company to conduct significant weapons training. Since the CVBG and MARG must fight as a team, they must also train as a team to achieve and maintain combat readiness. A predeployment workup plan provides for individual ship/squadron efforts to complete basic qualifications with follow-on underway periods of ever increasing intensity and complexity to integrate the team's diverse components. Underway weapons training is coordinated through the Commander, Afloat Training Group Atlantic/Pacific (COMATGLANT/PAC) and major Fleet exercises are conducted to simulate deployed contingency scenarios and enhance combat readiness. The COMLANTFLT Ordnance Handling Safety Assistance Team (OHSAT) and the COMNAVAIRPAC Weapon Safety Assistance Team (WSAT) can be made available for underway training under the provisions of CINCLANTFLTINST 8020.3 series and COMNAVAIRPACINST 8020.3 series, respectively. Support is also provided for surface force activities via COMNAVSURFLANTINST 8023.4 series and COMNAVSURFPACINST 8023.1 series.

NOTE

In addition to the training requirements listed above, all Marine Corps MOSs and Navy NECs that deal with handling, transportation, or storage of ammunition and explosives will complete the AMMO-18 and/or AMMO-49 Defense Ammunition Center (DAC) computer based training courses as described in the NAVSEA OP5.

6.3.7 Personnel Classification Systems. There are several methods of identifying skill, knowledge, and aptitude characteristics for effective manpower management.

6.3.7.1 The Navy Enlisted Classification (NEC) structure, of which the NEC coding system is a part, identifies active and inactive duty Navy personnel best suited to fill specified weapons billets. In cases where NECs reflect special training, inventories of coded billets and qualified candidates are the bases for planning and controlling the assignment of personnel to formal courses leading to initial and progressive NEC code designations. NEC types typically related to airborne weapons are:

COURSE/ TITLE	CIN	LOCATION	TRACK/ UMBRELLA
P-3 ARMAMENT/ ORDNANCE SYSTEM O-LEVEL	C-646-9571	CNATTU JACKSONVILLE, WHIDBEY ISLAND	C-646-1140
P-3 CONVENTIONAL WEAPONS LOADING	C-646-3573	CNATTU JACKSONVILLE, WHIDBEY ISLAND	C-646-1140
P-3 CONVENTIONAL WEAPONS REFRESHER	C-646-1144	PATRECONFOR ATL JACKSONVILLE	NONE
H-60 ARMAMENT AND RELATED SYSTEMS ORGANIZATION MAINTENANCE	C-646-9407	CNATTU JACKSONVILLE, WHIDBEY ISLAND	C-646-0840
H-60 CONVENTIONAL WEAPONS LOADING	C-646-9412	CNATTU JACKSONVILLE, WHIDBEY ISLAND	C-646-0840
MH-60S CONVENTIONAL WEAPONS LOADING	C-646-9413	CNATTU NORFOLK, NORTH ISLAND	C-646-9400
MH-60S ARMAMENT ORGINIZATIONAL MAINTE-NANCE	C-646-0002	CNATTU NORFOLK, NORTH ISLAND	C-646-9400
AVIATION ORDNANCE SYSTEM TECH COURSE CORE	C-646-3111	CNATTMARU/DET CHERRY PT NC	M-646-7027/ M-646-7028
AVIATION ORDNANCE SYSTEM TECH COURSE MEU STRAND	C-646-3112	CNATTMARU/DET CHERRY PT NC	M-646-7027
AVIATION ORDNANCE SYSTEM TECH COURSE F-18 STRAND	C-646-3867	CNATTMARU/DET CHERRY PT NC	M-646-7028
HAZARDOUS MATERIALS/ EXPLOSIVE DRIVER	C-646-3890	CNATTMARU/DET CHERRY PT NC	M-646-7027/ M-646-7028
ARMAMENT WEAPON SUPPORT EQUIPMENT MGR	C-646-3108	CNATTU NORFOLK, NORTH ISLAND	NONE
ARMAMENT WEAPON SUPPORT EQUIPMENT TECH	C-646-3109	CNATTU NORFOLK, NORTH ISLAND	NONE
AIR LAUNCHED WEAPONS ORDNANCE SUPERVI-SOR COURSE	C-646-4108	CNATTU NORFOLK, NORTH ISLAND, WHIDBEY ISLAND	C-646-7007
AIR LAUNCHED GUIDED MISSILES INTERMEDIATE MAINTENANCE	C-122-3111	CNATTU NORFOLK, NORTH ISLAND, WHIDBEY ISLAND	C-646-7007
PRECISION GUIDED WEAPONS INTERMEDIATE MAINTENANCE	C-122-3113	CNATTU NORFOLK, NORTH ISLAND, WHIDBEY ISLAND	C-646-7007
QUICKSTRIKE MINES INTERMEDIATE MAINTE-NANCE	C-646-4106	CNATTU NORFOLK, NORTH ISLAND, WHIDBEY ISLAND	C-646-7007
MOBILE ORDNANCE TRAINING	D-500-2007	CNAF NORFOLK	MOTT
FLEET (ORDNANCE) SENTENCING	D-500-2012	CNAF NORFOLK	MOTT
AV-8B CONVENTIONAL WEAPONS LOADING ORGANIZATION COURSE	C-646-3893	CNATTMARU/DET CHERRY PT NC	M-646-0143
AV-8B AIRCRAFT ORDNANCE TECHNICIAN ORGANIZATION MAINTENANCE	C-646-9888	CNATTMARU/DET CHERRY PT NC	M-646-0143
EA-6B CONVENTIONAL WEAPONS LOADING COURSE	E-646-1842	ELATKWEPSCOL, MATKWEPSCOL WI	NONE
EA-6B ARMAMENT SYSTEMS ORGANIZATIONAL MAINTENANCE	C-646-9741	CNATTU WHIDBEY ISLAND	NONE
F/A-18 STORES MANAGEMENT SYSTEM (CAREER) O-LEVEL MAINTENANCE	C-646-9974	CNATTU LEMOORE, OCEANA	C-646-0641
F/A-18 STORES MANAGEMENT SYSTEM (INITIAL) O-LEVEL MAINTENANCE	C-646-9973	CNATTU LEMOORE, OCEANA	C-646-0654 (C-646-0653 USMC ONLY)

Figure 6-3-1. Ordnance Handlers Listing of Schools

COURSE/ TITLE	CIN	LOCATION	TRACK/ UMBRELLA
F/A-18 CONVENTIONAL RELEASE SYSTEM TEST	D/E-646-0647	STRKFITWPNSCLANT OCEANA STRKFITWPNSCLPAC LEMOORE	C-646-0654 (C-646-0653 USMC ONLY)
F/A-18 CONVENTIONALWEAPONS RELEASE AND LOADING	D/E-646-0640	STRKFITWPNSCLANT OCEANA STRKFITWPNSCLPAC LEMOORE	C-646-0654 (C-646-0653 USMC ONLY)
F/A-18 E/F STORES MANAGEMENT SYSTEM (CAREER) O-LEVEL MAINTENANCE	C-646-9975	CNATTU LEMOORE, OCEANA	NONE
F/A-18 E/F STORES MANAGEMENT SYSTEM (INITIAL) O-LEVEL MAINTENANCE	C-646-9976	CNATTU LEMOORE, OCEANA	C-646-0642
F/A-18 E/F CONVENTIONAL WEAPONS RELEASE AND LOADING	D/E-646-0018	STRKFITWPNSCLANT OCEANA STRKFITWPNSCLPAC LEMOORE	C-646-0642/0655
F/A-18 E/F ARMAMENT SYSTEMS DIFFERENCE DATA O-LEVEL MAINTENANCE	C-646-9977	CNATTU LEMOORE, OCEANA	C-646-0655
UH-1N ARMAMENT O-LEVEL MAINTENANCE	C-646-3341	CNATT MARU CAMP PENDLETON	M-646-2044
H-1 CONVENTIONAL WEAPONS LOADING	C-646-3342	CNATTMARU/DET CAMP PENDLETON	M-646-2044
AH-1W ARMAMENT REPAIR O-LEVEL MAINTENANCE	C-646-3363	CNATTMARU/DET CAMP PENDLETON	M-646-2044
AH-1W TURRET/M197/M89/ 20MM FEED SYSTEMS O-LEVEL MAINTENANCE	C-646-3364	CNATTMARU/DET CAMP PENDLETON	M-646-2044
H-1 AIRCRAFT FAMILIARIZATION AND INTEGRATED ARMAMENT MAINTENCE	C-646-3311	CNATTMARU/DET CAMP PENDLETON	M-646-3300
AH-1Z ARMAMENT SYSTEM ORGANIZATIONAL MAINTENANCE	C-646-3320	CNATTMARU/DET CAMP PENDLETON	M-646-3300
AH-1Z M197 GUN, M89 FEEDER, TURRET, AND 20MM FEED SYSTEMS	C-646-3330	CNATTMARU/DET CAMP PENDLETON	M-646-3300
UH-1Y ARMAMENT SYSTEMS ORGANIZATIONAL MAINTENANCE	C-646-3340	CNATTMARU/DET CAMP PENDLETON	M-646-3300
H-1 Y/Z CONVENTIONAL LOADING	C-646-3350	CNATTMARU/DET CAMP PENDLETON	M-646-3300
H-1 UPGRADE ARMAMENT SYSTEMS ORGANIZATIONAL LEVEL MAINTENANCE	C-646-3310	CNATTMARU/DET CAMP PENDLETON	NONE
EXPLOSIVE ORDNANCE DISPOSAL BASIC (NAVY)	A-431-0011	NAVSCOLEOD EGLIN	NONE
AVIATION ORDNANCEMAN	C-646-2011	NATTC PENSACOLA	NONE
AVIATION ORDNANCE NAVY DIFFERENCE TRAINING	C-646-2012	NATTC PENSACOLA	NONE
AVIATION ORDNANCE OFFICER CAREER PROGRESSION LEVEL I	C-4E-0010	CNATT DET MILTON FL	NONE
AVIATION ORDNANCE OFFICER CAREER PROGRESSION LEVEL II	C-4E-0011	CNATT DET MILTON FL	NONE
AVIATION ORDNANCE OFFICER CAREER PROGRESSION LEVEL III	C-4E-0012	CNATT DET MILTON FL	NONE
CARGO/WEAPONS ELEV MAINT (MECHANICAL TRACK)	A-690-0100	SERVSCHCOM GREAT LAKES	NONE
CARGO/WEAPONS ELEV MAINT (ELECTRICAL TRACK)	A-690-0100	SERVSCHCOM GREAT LAKES	NONE
STRIKE ARMAMENT EQUIPMENT INTERMEDIATE MAINTENANCE REPAIR	C-646-3118	CNATTU NORFOLK, NORTH ISLAND	NONE

Figure 6-3-1. Ordnance Handlers Listing of Schools - contd.

a. Entry Series-AO-6899 and DG-9760.

b. Rating Series-see Figure 6-3-2.

c. Special Series-GM-0812 and EOD related 5300. Refer to the Manual of Navy Enlisted Manpower and Personnel Classifications and Occupational Standards/Navy Enlisted Classifications (NAVPERS 18068E) for further details.

6.3.7.2 Similar to the NEC, the U.S. Marine Corps Military Occupational Specialty (MOS) applies to both officer and enlisted personnel for purposes of effective and efficient classification, assignment, career planning, and promotion. See Figure 6-3-3 for MOSs associated with weapons. The MOS Manual, MCO P1200.7 series, provides further details.

6.3.7.3 The Navy Officer Billet Code (NOBC) is used to identify officer billet requirements and occupational qualifications acquired through billet experience or through a combination of education and experience. An NOBC provides a general description of duties performed in a specified billet. Not all duties are covered, nor is every duty that is listed an absolute requirement of that billet. The NOBC also identifies a group of officer billets that are similar, but not necessarily identical in scope and nature of duties. See Figure 6-3-4 for NOBCs that are frequently assigned to ordnance billets.

6.3.7.4 The Navy officer designator identifies an individual's professional training and military experience category (e.g., Naval aviation, aviation ordnance, surface warfare, medical corps, supply corps, etc.). The two most often assigned to airborne weapons duties are 636X (Aviation Limited Duty Officer, Ordnance) and 736X (Chief Warrant Officer, Aviation Ordnance Technician).

6.3.8 Funding. Initial instructor training for weapons is funded by Naval Air Systems Command (PMA-205). En-route training related to a permanent change of duty station (PCS) is funded by BUPERS. Temporary additional duty (TEMADD), including travel costs, for follow-on training may be funded by aircraft controlling custodians, TYCOMs, or BUPERS. Requests shall be submitted in accordance with type/functional Commander Directives and the CANTRAC, NAVEDTRA 10500. Training for U.S. Marine Corps personnel shall be requested in accordance with Commandant of the Marine Corps, Commanding General, Fleet Marine Force, or Wing Directives and the CANTRAC. Funding shall be requested prior to obligation of operational target funds.

6.3.9 Aircraft/Aircraft Systems Engineering Technical Services Program. Both Navy Civilian Technical Specialist (NCTS) and Contractor Technical Specialist (CTS) are employed to support aircraft and aircraft systems. Engineering Technical Services (ETS) personnel provide logistical, engineering and real time feed-back for the COMNAVAIRSYSCOM Program Managers and Engineering personnel as well as providing engineering, logistical and training support to operating forces. The primary source of aircraft/aircraft systems ETS is through the Naval Air Technical Data & Engineering Service Command (NATEC) Headquarters San Diego.

6.3.9.1 NATEC functions and responsibilities include:

a. Provide tailored on-site training on all aspects of aircraft systems equipment and aircraft wiring (formal, informal and OJT).

BILLET SPECIALTY	NEC	TRAINING TRACK
Air Launched Weapons Technician	6801	C-646-7007
Strike Intermediate Armament Maintenanceman	6802	C-646-3118
Armament Weapons Support Equipment (AWSE) Maintenance Manager	6810	C-646-3108
Armament Weapons Support Equipment Technician	6811	C-646-3109
Airborne Weapons Technical Manager	6813	C-4E-0010
P-3 Armament Systems Organizational Maintenance Technician	8319	C-646-1140
EA-6B Armament Systems Maintenance Technician	8332	C-646-1840
F/A-18 E/F Armament Systems Maintenance Technician (Career)	8341	C-646-9975
F/A-18 E/F Armament Systems Maintenance Technician (Initial)	8842	C-646-0642
F/A-18 Armament Systems Maintenance Technician (Career)	8342	C-646-0641
F/A-18 Armament Systems Maintenance Technician (Initial)	8842	C-646-0653
H-60 Armament Systems Maintenance Technician	8378	C-646-0840
MH-60S Electronics System Organizational Career Maintenance Technician	8389	C-646-9400
Ammunition Inventory Management Specialist	9525	A-041-0040
Small Arms Marksmanship Instructor	0812	J-041-0148
Shipboard Elevator Hydraulic/Mechanical System Mechanic	4296	A-690-0100
Shipboard Elevator Hydraulic/Electrical System Mechanic	4671	A-690-0099
Advanced Undersea Mk 46 Maintenance Weaponsman	0746	A-123-0174

Figure 6-3-2. Weapons Maintenance Related Specialty Skills

SPECIALTY (OCCUPATIONAL FIELD 6500)	MOS	COURSE
Aviation Ordnance Officer	6502	Q-4E-0010
Aviation Ordnance Trainee	6511	C-646-2011
Aviation Ordnance Technician	6531	M-646-0143 for AV-8B M-646-2044 for Helicopters C-646-0653 for F/A-18 R-646-1840 for EA-6B
Aviation Ordnance Systems Technician	6541	M 646-7027 M-646-7028
Aviation Ordnance Chief	6591	Q-4E-0010

Figure 6-3-3. U.S. Marine Corps Aviation Ordnance Military Occupational Specialties

NOBC	BILLET
6942	Weapons Logistics Officer
6960	Weapons Officer, Naval Activity
6990	Weapons Safety Officer
7360	Aviation Ordnance Technician
9053	Staff Weapons Officer
9096	Staff Readiness Officer (Weapons)
9202	Gunnery/Ordnance Officer
9250	Division Officer, Weapons Department (General)
9252	Division Officer, Weapons Department (Gunnery)
9254	Division Officer, Weapons Department (Guided Missiles)
9258	Weapons Officer (General)

Figure 6-3-4. Navy Officer Billet Codes

b. Providing expertise, information, and assistance on the application, use, theory, troubleshooting, and repair of systems/equipment.

c. Developing work-around procedures, and methods for maintenance of systems/equipment.

d. Identifying system deficiencies and recommending solutions.

e. Reviewing, evaluating, and contributing to new and updated technical publications.

f. Assisting, evaluating, and reporting on installation of and/or modifications to systems/equipment.

g. Providing technical assists to operating forces in response to maintenance difficulties.

h. Participating in logistics meetings and conferences.

i. Assisting the Fleet in identifying training needs.

Request for NATEC support should be made through NATEC Headquarters, San Diego CA, and requires formal identification of logistics shortfalls to the sponsor for funding justification.

6.3.10 Weapons/Weapon Systems ETS Program. Both NCTS and CTS are employed to support weapons, weapons systems integration. ETS personnel provide logistical, engineering support and provide real time feed-back for the COMNAVAIRSYSCOM Program Managers and Engineering personnel. ETS also provide engineering, logistical and training support to operating forces. The primary source of weapon/weapon system ETS is through the NAVAIRWARCENWPNDIV FWST, Code: 674000D. NAVAIRWARCENWPNDIV FWST functions and responsibilities include:

a. Providing on-site/on-call personnel specializing in missiles, conventional ordnance, aircraft Stores Management Systems (SMS), targets, tactical air launched decoys, and their associated racks, launchers, and support equipment, to include providing Tech. Assist for forward deployed units ashore and afloat.

b. Providing Weapons Assist Team (WAT) personnel, coordination and leadership services in accordance with Volume I, Section 3.

c. Provide support, within prevailing manning constraints, to Fleet squadrons in support of wing-sponsored Integrated Weapons Systems Review (IWSR) or similar formal training programs for missile, conventional ordnance, and gunnery exercises.

d. Provide classroom, PJT, OJT, and refresher training and identify Fleet training requirements.

e. Perform trend analysis of weapon system maintenance performance and generate reports on status and recommendations.

f. Providing personnel to Fleet and composite squadrons and numbered Fleet Commanders to assist in surface/air launched targets and associated launching devices.

g. Provide technical support while conducting Aviation Ordnance Readiness Reviews (AORRs) and Aviation Ordnance Safety Assessment (AOSA) in accordance with Volume I, Section 3.

h. Provide support during performance of deployed Missile Sentencing Inspection (MSI) and training for Fleet personnel performing MSI.

i. Providing support, as requested, to Organizational and Intermediate level maintenance activities for technical, logistical and training issues related to weapon upgrades, variants, and associated aircraft fire control system.

j. Providing personnel, as requested, for underway training of deploying wings, squadrons, and aircraft capable ships.

k. Providing weapons/test equipment training curricula and on-site training for Naval Weapons Station personnel.

l. Developing and maintain training aids/curricula, as tasked, and distributing audio visual devices/material used by FWST field personnel.

m. Support the weapons handling damage assessments and recommending corrective action.

n. Provide support in the Deficiency Reporting Program described in Volume I, Section 4.6 and identifying weapon/weapon system deficiencies and recommend solutions.

o. Providing technical support for Consolidated Operability Test (COT) and Shipboard Installation Assurance Test (SIAT).

p. Provide personnel at all levels of weapons maintenance with training in hazardous materials control and management, as well as in the use of NAVAIR 01-1A-75.

q. Provide support for all weapons handling and transporting equipment associated with airborne weapons.

6.3.10.1 Responsibilities:

6.3.10.1.1 Command or Station will perform the following actions:

a. Provide adequate office space, with phone service for requested FWST personnel.

b. Request training, technical support, and weapons assistance with local FWST personnel.

c. Request FWST travel requirement via Naval message to TYCOMs and info NAVAIRWARCENWPNSDIV (Code 674200E).

d. If TYCOM/FWST program travel funds are not available to support requested travel, local commands will provide travel funding and coordinate effort with TYCOM and FWST Program Office.

6.3.10.1.2 TYCOMs will perform the following:

a. Ensure commands/stations provide adequate office space, with phone service, for requested FWST personnel.

b. Coordinate Fleet operational requirements with FWST Program Office (Code 674200E).

c. Establish, practice, and request FWST travel requirements with FWST Program Office.

6.3.10.1.3 FWST Program Office (Code 674200E) will perform the following:

a. Provide trained NCTS and CTS personnel to support Fleet approved requests/requirements for FWST support.

b. Manage the FWST program in accordance with COMNAVAIRSYSCOM work unit assignment.

c. Provide quarterly travel expenditure reports to TYCOMs for assigned FWST personnel.

d. Provide annual budget requirements to COMNAVAIRSYSCOM based on Fleet requirement.

e. Coordinate all FWST effects with TYCOMs,

f. Inform COMNAVAIRSYSCOM on FWST program status as required.

6.3.10.1.4 COMNAVAIRSYSCOM will perform the following actions:

a. Coordinate with the TYCOMs and FWST Program Office to determine the annual FWST personnel requirements.

b. Provide work unit assignment and funding required to the FWST Program Office for program execution.

6.3.11 Center for Naval Aviation Technical Training. The mission of CNATT is to provide technical training for officer and enlisted personnel in the operation, maintenance, and repair of weapon systems and associated equipment in response to the Chief of Naval Operations (CNO) requirements. Additionally, CNATT provides technical support to COMNAVAIRSYSCOM in the maintenance training acquisition process. As a technical advisor, CNATT provides the most cost effective training, monitors contracted curriculum development, recommends maintenance trainer design and procurement, provides training standardization and develops near and long term requirements recommendations for CNO and COMNAVAIRSYSCOM. Other functions include:

a. Providing tailored, on site training on intermediate maintenance level aspects for weapons.

b. Reviewing, evaluating, and contributing to new and updated publications.

c. Participating in logistics meetings/conferences.

d. Providing Initial and career course training.

e. Providing on site/on call personnel specializing in missiles, conventional ordnance, targets, remotely piloted vehicles, tactical air launched decoys, and their associated racks, launchers, and support equipment.

f. Supporting Fleet Organizational and Intermediate level activities tasked with handling, preparing, and launching remotely piloted vehicles.

g. Providing on-demand personnel for underway training of deploying wings, squadrons, and aircraft capable ships.

h. Developing and maintaining training aids/curricula as tasked.

i. Developing domestic and foreign military sales special site training.

j. Providing technical support for initial shipboard installation of weapons.

k. Providing Fleet Introduction Assistance Training (FIAT) as required for new weapon support equipment test equipment.

6.3.12 Training Publications. The CANTRAC contains information on schools and courses under the purview of CNET and other Navy training commands. In addition to the CANTRAC and NEC/MOS documents discussed above, the following are also available for related training information:

a. The automated Navy Integrated Training Resources and Administration System (NITRAS) is responsive to demands for training data required by the CNET, BUPERS, the Navy Recruiting Command, and other high level authorities.

b. The List of Training Manuals and Correspondence Courses (NAVEDTRA 10061) is a catalog of professional subjects training manuals and self-study courses for both officer and enlisted personnel. The list is revised and distributed to all ships and stations annually.

c. The Index to the Directory of Navy Training Devices prepared by the NAVSUP WSS is a listing of training devices, training aids, accessories, and modification kits that are under Naval Training Equipment Center inventory control. Listed items are cross-referenced to a multi-volume directory that contains descriptive data for each device.

6.3.13 Training Program Evaluation and Improvement. To assure the continued currency, relevance, technical accuracy, and adequacy of weapons training courses, various means of measuring their effectiveness have been implemented. The CNET maintains a training appraisal program based on external feedback from all Naval activities to improve the quality of school graduates and, thus, enhance Fleet readiness. The CNET maintains an internal feedback program via CNATT contact with Fleet activities concerning the validity and effectiveness of assigned training courses. COMNAVAIRSYSCOM is responsible for providing policy direction, controlling and coordinating the Training Audit Program, assigning audit team leaders, monitoring training data reviews, and serving as the central point of contact for technical audits/reviews of specialized training schools. Other systems commanders, TYCOMs, and aircraft controlling custodians are responsible for supporting training audits at schools which have courses under their cognizance, providing audit team leaders/members as requested, and for arranging Fleet participation as may be required.

6.3.13.1 The Maintenance Training Improvement Program (MTIP) provides diagnostic testing of personnel performing organizational and intermediate level maintenance functions. A qualitative assessment of training courses, training materials, and weapon system skill levels is made by evaluation of the technical knowledge displayed by the respective personnel at any point in the training sequence. When appropriate, remedial actions are taken to upgrade any training program deficiencies. Under policies established by CNO, COMNAVAIRSYSCOM provides technical assistance in the development, implementation, and support of software requirements and training materials. TYCOMs and aircraft controlling custodians issue implementing directives, provide guidance, and ensure adequate planning to support the MTIP.

6.3.13.2 The Maintenance Training Requirements Review (MTRR) is sponsored by CNO for designated weapon systems training courses. To promote sustained training excellence, the

MTRR program objectives are to review formal and practical school curricula, identify training deficiencies, and initiate program actions to achieve effective, coordinated and standardized training. Review process also ensures planned skill progression between "A" schools, pipeline training and Fleet follow-on training. The Navy Training Requirements Review (NTRR) Instruction OPNAVINST 1500.69 series, provides detailed review objectives.

6.3.13.3 The Standard Training Activity Support System (STASS) is a computerized system used to facilitate management of the CNATT training program. The STASS provides student scheduling into various courses, generates student reports, performs diagnostic testing and grading, and maintains individual and unit statistical data. This system is also used to manage MTIP question banks, provide automatic test grading capability, generate reports, and schedules classes for personnel in the MTIP program.

6.3.13.4 The Aviation Training Improvement Program (ATIP) identifies Naval Air Reserve personnel training deficiencies and is compatible with MTIP. COMNAVAIRESFORINST 1500.5 provides further ATIP details and program guidance.

6.3.13.5 The Individual Training Standards System/Maintenance Training Management and Evaluation System (ITSS/MATMEP) is an evaluation program unique to Marine Corps enlisted aviation MOS. It identifies the tasks skills and knowledge requirements of each MOS and incorporates the MTIP testing for evaluating an individual's "hands-on" performance capability and technical knowledge. MCO P4790.20 establishes ITSS/MATMEP policy, procedures, and responsibilities.

6.3.13.6 Under the auspices of aircraft controlling custodians, Aviation Maintenance Management Teams evaluate performance, advise, train, and assist Fleet activities in matters related to weapons procedures, logistic support, QUAL/CERT, and human resources. The teams are available to both Navy and Marine Corps activities on request. COMNAVAIRLANTINST 13020.1 series and COMNAVAIRPACINST 4790.44 are the implementing directives for Aviation Maintenance Management Teams.

6.3.14 Purpose. In accordance with the policy set forth in OPNAVINST 8020.14/MCO P8020.11, activities shall conduct tasks involving ordnance in the safest manner possible. To minimize the probability of a mishap, the potential for personnel errors must be controlled through documented experience and training (qualifications) coupled with a management process designed to prevent inadequately trained personnel from performing Ammunition and Explosive (A&E) jobs/tasks. Collectively, the following references administer the Department of the Navy's (DON's) Qualification/Certification (QUAL/CERT) Programs and shall take precedence over what is mentioned herein:

a. OPNAVINST 8023.24 Navy Personnel Explosives Handling QUAL/CERT Program,

b. MCO 8023.3 Personnel QUAL/CERT Program for Class V Ammunition and Explosives,

c. NAVSEAINST 8020.9 Ammunition and Explosives Personnel QUAL/CERT Program for Research, Development, Test and Evaluation Activities, and

d. SSPINST 8023.1 Strategic Systems Programs Personnel QUAL/CERT Program.

6.3.14.1 The emphasis of the QUAL/CERT Program is designed to maximize explosives safety adherence while meeting mission requirements. Facts, findings and opinions of most ordnance mishap investigations indicate that the incident might have been avoided if the personnel were properly trained, qualified and certified to perform an assigned ordnance related task. This section does not replace the existing OPNAVINST or MCO. All personnel, tasked to handle A&E at each level of maintenance, military or civilian, shall comply with References a through d.

CHAPTER 6.4

Systems Acquisition Training

Table of Contents

Paragraph	Subject	Page
6.4.1	Training Requirements for Acquisition Managers	6-4-1
6.4.2	DAU Mission Operations	6-4-1
6.4.3	Training Requirements Identified During Acquisition	6-4-1

CHAPTER 6.4

Systems Acquisition Training

6.4.1 Training Requirements for Acquisition Managers.

6.4.1.1 General. Acquisition management is governed by laws and regulations. It has been determined that to reasonably hold one accountable for complying with these laws and regulations, there needed to be formal training provided specifically targeted to each function within acquisition management. This requirement led to the creation of the Defense Acquisition University (DAU) by Department of Defense Directive (DODD) 5000.57. Their website is http://www.dau.mil/. The DAU is headquartered at Fort Belvoir, VA. The mission of the DAU is to educate and train professionals for effective service in the defense acquisition system; to achieve more efficient and effective use of available acquisition resources by coordinating Department of Defense (DOD) acquisition education and training programs and tailoring them to support the careers of personnel in acquisition positions; and to develop education, training, personnel, and publication capabilities in the area of acquisition.

6.4.2 DAU Mission Operations. As explained in DODD 5000.52, the primary objective of the Defense Acquisition Technology and Logistics (AT&L) Workforce Education, Training, and Career Development Program is to create a professional, agile, and motivated workforce that consistently makes smart business decisions, acts in an ethical manner, and delivers timely and affordable capabilities to the warfighter. The DAU is part of the career development programs. It has five regions for Level I, II, and III certification training. They are the west region at San Diego, CA, the midwest region at Kettering, OH, the south region at Huntsville, AL, the mid-Atlantic region at California, MD and the capital and northeast Region at Ft. Belvoir, VA. The Defense Systems Management College (DSMC), at Ft. Belvoir, VA is also part of the DAU providing both Program Manager (PM) and Executive PM courses. Completion of these courses meets the statutory requirement for Program Executive Officer (PEO)/Acquisition Category (ACAT) I/II PM and Deputy PM positions (10 USC 1735).

6.4.3 Training Requirements Identified During Acquisition.

6.4.3.1 Navy Training Plan (NTP). The NTP is a product of the acquisition process. It is an official statement of billets, personnel, and training resource requirements needed to support the introduction and life-cycle operational use of an ordnance item or weapons system. The NTP assigns responsibilities for planning, programming, and implementing actions necessary to accomplish the following:

a. Ensure coordination of billets, personnel, military construction, training support, and training planning concurrently with the ordnance item or weapons system development and production.

b. Provide efficient and adequate training programs phased with initial ordnance item or weapons system introduction and subsequent modifications.

6.4.3.2 Training Aids. Another important training issue during the acquisition phase is identifying training aid requirements and including them in the acquisition plan. Training aids are

covered in the NTP. However, occasionally an ordnance item or weapons system will be introduced into the system, or an existing one modified, which does not result in the development or update of an NTP. In these cases the need for new training aids must still be considered.

6.4.3.3 Training Aid Users. While developing an acquisition plan for a new ordnance item or weapons system, the following schools at a minimum need to be consulted to determine if any training aid requirements exist to provide proper training to the Fleet on the new item:

a. Gunners Mate (GM) School, Service Schools Command (SERVSCOLCOM), Great lakes, IL 60088-5400

b. Fleet Combat Training Center Atlantic (FCTCL), Dam Neck, 1912 Regulus Ave., Virginia Beach, VA 23461-2098

c. Navy School, Explosive Ordnance Disposal (NAVSCOLEOD) Eglin AFB, FL 32542-6009, Phone Commercial (850) 882-9080, https://www.npdc.navy.mil/ceneoddive/eods/

d. Defense Ammunition Center, Attn: SJMAC-AS, 1 C Tree Road, McAlester, OK 74501-9054, https://www3.dac.army.mil

CHAPTER 6.5

Ordnance Specialty Training

Table of Contents

Paragraph	Subject	Page
6.5.1	Training Requirements	6-5-1
6.5.2	Training Sources	6-5-1
6.5.3	Schoolhouses	6-5-1

CHAPTER 6.5

Ordnance Specialty Training

6.5.1 Training Requirements.

6.5.1.1 General. Training requirements for individuals and groups involved directly or indirectly in ordnance or explosives handling can be found in many different instructions. Most process governing instructions contain a section which identifies required training. Naval Sea (NAVSEA) OP 5, Appendix D covers a broad spectrum of training requirements and training sources. Each Type Commander (TYCOM) has ordnance training courses listed in their training requirements manual. There are many technical training courses available to cover training requirements in the following:

a. Ordnance management.

b. Explosives safety.

c. Ordnance transportation.

d. Ordnance handling.

e. Ordnance automated management systems.

6.5.2 Training Sources. For many, identifying all of the available training is as difficult as determining all of the training requirements. No one document exists that identifies all of the available ordnance training. One good source is the Catalog of Navy Training Courses (CANTRAC). CANTRAC is accessible through the Corporate Enterprise and Training Activity Resource System (CETARS) at https://cetarsweb.cnet.navy.mil/pls/cetars/main.cac_message. In this era of joint training, there are many formal ordnance training courses offered by the Army that are available to the Navy, and informal ordnance training courses within the Navy, that do not have an assigned Navy Course Identification Number. The Catalog of Nonresident Training Courses, Naval Education and Training (NAVEDTRA) 12061, provides information on available correspondence courses.

6.5.3 Schoolhouses. The following schoolhouses provide the majority of the formal training or training materials for informal training:

a. Defense Ammunition Center (DAC) McAlester, OK. As directed in DOD 5160.65-M, DAC provides training in ordnance management, explosives safety, and ordnance transportation to all DOD military and civilian personnel. Navy related training is available through Computer Based Training (CBT), CD-ROM media and conducted both at DAC and on site at the requesting activity. Further information can be obtained by calling DAC at DSN 956-8036 or commercial (918) 420-8036, FAX: DSN 956-8944 or commercial (918) 420-8944. Their website is: http://ammo.okstate.edu.

b. Fleet Combat Training Center (FCTCL), Dam Neck, VA. FCTCL provides training in ordnance management and ordnance handling for military personnel on the east coast. Further information can be obtained by calling FCTCL at Defense Switch Network (DSN) 492-6234 or commercial (757) 492-6234. Their website is: http://www.pcsdamneck.net/.

c. Fleet Training Center (FTC), San Diego, CA. FTC provides training in ordnance management and ordnance handling for military personnel on the west coast. Further information can be obtained by calling FTC at DSN 526-7559 or commercial (619) 556-7559.

d. Naval Surface Warfare Center Division (NSWC-DIV) Indian Head. Indian Head provides standardized training materials for informal ordnance handling, and ordnance transportation courses. Training materials or further information can be obtained by calling Indian Head Code 044 at DSN 354-4504 or commercial (301) 743-6748.

e. Surface Warfare Officer's School (SWOS), Newport, RI. SWOS provides ordnance management training for surface warfare officers. Further information can be obtained by calling SWOS at DSN 948-4957/4958 or commercial (401) 841-4957/4958. Their website is: http://www.swos.navy.mil/.

SECTION 7

Surface Ordnance

Table of Contents

Chapter	Subject	Page
7.1	Introduction	7-1-1
7.2	Department of Defense Interfaces	7-2-1
7.3	Management Information System Links	7-3-1

CHAPTER 7.1

Introduction

Table of Contents

Paragraph	Subject	Page
7.1.1	General	7-1-1
7.1.2	Objective	7-1-1
7.1.3	Background	7-1-2
7.1.4	Terminology	7-1-2
7.1.5	Scope	7-1-3
7.1.6	Policy	7-1-3
7.1.7	Command Relationships	7-1-4

List of Illustrations

Figure	Title	Page
7-1-1	Command Relationships	7-1-5

CHAPTER 7.1

Introduction

7.1.1 General. This chapter addresses functional areas of inventory management. This includes the distribution and stocking of non-nuclear ordnance; requisitioning, returning, issuing, receiving, and storing of ordnance items; the reporting of physical assets; the logistics support interfaces between the U.S. Navy and the U.S. Marine Corps, U.S. Coast Guard, U.S. Air Force and the Single Manager for Conventional Ammunition (SMCA), respectively; and the management responsibilities for mobilization planning in support of contingencies.

7.1.1.1 Asset Allocation. The inventory management functions pertain to the management of a multi-billion dollar inventory consisting of a wide range of end items and components. These items represent the aggregate material on hand, or due in, needed to satisfy the combat War Reserve Material Requirement (WRMR) and Non-Combat Expenditure Allocation (NCEA) non-nuclear ordnance stocking objectives, afloat and ashore. Total Fleet requirements are allocated in accordance with the Office of the Chief of Naval Operations (CNO) (OPNAV) allocation letters, and within budget constraints. Shortages to these allocation goals are satisfied mainly through new production or maintenance actions. Assets due in from production are consigned on a "fair share" basis to satisfy claimant WRMR/NCEA shortfalls. Non-nuclear ordnance is allocated and distributed to the afloat forces to fill allowances of combat and auxiliary ships. A distinctive feature of the ordnance material management system is the positioning of retail replenishment stocks at tidewater locations to facilitate over-the-dock accessibility for on-loading and off-loading of combatants and auxiliary ships.

7.1.2 Objective. The objective of this section is to consolidate the existing policies and procedures governing surface ammunition 2T Cognizance (COG) management. These policies and procedures are designed to provide and maintain logistics support of the operating forces and ensure the maximum readiness of the in-service surface ammunition stockpile. As a corollary to its overall objective, this information in this section is intended to fulfill the following objectives and uses:

a. To serve as a convenient guide and reference document for operational and support personnel who are concerned with, and responsible for, directing and implementing surface ammunition policies and procedures;

b. To depict the relationship of the surface ammunition functional areas to the logistic lifecycle;

c. To highlight the responsibilities and relationships among the shore activities and Fleet units in achieving and maintaining the maximum level of surface ammunition support required by the Naval forces, ashore and afloat; and

d. To provide reference, where appropriate, to official publications and detailed documents concerning subject matter areas. This section is broadly focused and presents an overview of the significant management processes and functional areas applicable to surface ammunition. As such, it is not intended to take the place of current instructions, but to provide a general understanding and reference based on these authoritative sources.

7.1.3 Background.

7.1.3.1 Authority. This Surface Ammunition Management policy is published and distributed by direction and authority of Program Executive Officer Integrated Warfare Systems (PEO IWS), Naval Gunnery Project Office (PEO IWS3C), Conventional Ammunition Acquisition Project Manager (APM) under its assigned responsibilities for program management of 2T surface ammunition.

7.1.3.2 The development of this information has proceeded from guidance addressing the management of surface ammunition being dispersed in a wide and diversified array of instructions, technical directives, handbooks, correspondence, and other documents. Guidance has emanated from numerous sources and levels within the surface ammunition community and is usually concerned with distinct and specialized functional areas of surface ammunition management without reference to its impact on the overall logistic support process. By gathering these dispersed statements of policy and procedures and integrating them within a single publication, it is intended to present herein the diversified world of surface ammunition in a manner that relates its parts to the whole. Attention has been directed, where appropriate, to functional areas where specific written guidance is not available.

7.1.3.3 Subject Areas. The subject areas addressed in the narrative are functionally organized and arranged to ensure continuity and facilitate ready reference. The coverage ranges from the point of higher command providing guidance and direction, through systems command implementation of guidance and each supporting activity's responsibilities and execution, to implementation by the Fleet. At each level, the directives, responsibility assignments, and the chronology of the procedural steps are indicated.

7.1.4 Terminology. Information in this section primarily addresses surface ammunition specifically identified by COG symbol "2T" (except underwater mine components and countermeasures) and subject to the program management of PEO IWS3C Naval Gunnery Project Offices, Conventional Ammunition APM and the inventory management of the Naval Supply Systems Command Global Logistics Support (NAVSUP GLS AMMO). Where policies and procedures are not COG-specific, the material contained in this section may be used to understand the management of other non-nuclear ordnance items. Each ordnance COG is defined in NAVSUP P-724. Although references provided for portions of this section are the same references for the other ordnance COGs, specific directions contained in this section cannot be applied as authoritative to management of other ordnance. To assist in determining if the guidance provided is specific to surface ammunition or is generic to non-nuclear ordnance, the following terms derived from the Department of Defense (DOD) dictionary will be used throughout this section (except when included in a published name/title).

a. Non-Nuclear Ordnance. All munitions containing non-nuclear explosives, and biological and chemical agents. This includes bombs, and non-nuclear warheads; guided missiles, and ballistic missile components; artillery, mortar, rocket, and small arms ammunition; all mines, torpedoes, and dept h charges; demolition charges; pyrotechnics; clusters and dispensers; cartridge and propellant actuated devices; electro-explosive devices; clandestine and improvised explosive devices; and all similar or related items or components. Any time the term ordnance is used it is referring to non-nuclear ordnance.

b. Ammunition. Non-nuclear ordnance COGs (2E, 2T, and 0T) assigned to the SMCA that are charged with non-nuclear explosives, propellants, pyrotechnics, initiating composition, bio-

logical, or chemical material for use in military operations, including demolitions; and all similar or related items or components. Certain suitably modified ammunition can be used for training, ceremonial, or non-operational purposes.

c. Weapons. Non-nuclear ordnance COGs (all others) not assigned to the SMCA that are charged with non-nuclear explosives, propellants, pyrotechnics, initiating composition, biological, or chemical material for use in military operations, including demolitions; and all similar or related items or components. Certain suitably modified weapons can be used for training, ceremonial, or non-operational purposes.

7.1.5 Scope. Information contained within the following section is designed to support CNO readiness objectives by ensuring timely and effective Fleet logistics support. It describes the standard operating policies and procedures for program, acquisition, in-service, maintenance, inventory, and demilitarization/disposal management; logistics management support; security assistance program; and training functions. This information applies to all Navy and Marine Corps activities concerned with Naval surface ammunition and associated equipment. The following types of surface ammunition are covered:

a. 2T COG Ammunition.

(1) Surface gun ammunition 20mm to 16 inch service and training rounds including cartridges, projectiles, cases, fuzes, primers, propelling charges and miscellaneous subassemblies.

(2) Small arms and Landing Party ammunition for shotguns, rifles, pistols, revolvers, machine guns and landing force ammunition including hand grenades, and rifle grenades.

(3) Pyrotechnics including surface flares, dye markers, location markers, illuminating (ground and marine) signals, smoke (ground and marine) signals, signal kits, color burst units, etc.

(4) Demolition explosives and materials including blasting caps, demolition charges and containers, detonating cord, demolition kits, firing devices, igniters, primers, cryptographic equipment destroyers, charges
and impulse cartridges.

(5) Cartridges and cartridge actuated devices.

(6) Miscellaneous ammunition components and ammunition details including pallets, pallet adapters, pallet crates, and shipping and storage containers specifically designed for conventional ammunition items other than air ammunition items.

b. Ammunition and logistics support equipment associated with the above listed 2T COG ammunition.

7.1.6 Policy.

7.1.6.1 The CNO provides the basis for this information and sets policy for the assignment of management responsibilities to all activities of the Naval establishment concerned with the acquisition, maintenance, inventory, logistics support, or demilitarization/disposal of surface ammunition and equipment.

7.1.6.2 Conventional Ammunition APM. The PEO IWS3C Conventional Ammunition APM, a subordinate to PEO IWS is assigned the APM responsibilities for surface ammunition (2T COG)

by Charter. The Charter assigns specific responsibilities and provides policy concerned with the acquisition and maintenance of surface ammunition and equipment.

a. APM Background: Because the management of the 2T COG Ammunition Program was stable and NAVSEA was required to reduce headquarters staff the program was identified for transfer of ammunition acquisition and maintenance management to a field activity. In May 1988, 2T COG conventional ammunition program management was transferred from the Weapons and Combat Systems Directorate (SEA-06) to NSWC Crane Division. 2T COG Ammo Program Management Office (PM4), was established at Crane with program oversight remaining in SEA-06. In 1993, program oversight was transferred to SEA-91W2, Gun Weapons Systems (GWS). In 1995, the Program Manager Office for Naval Surface Fire Support Program, PMS-429, was established in SEA-91. Shortly thereafter, in 1996, both PMS-429 and GWS were transferred to the Program Executive Officer for Theater Surface Combatants, PEO-TSC, and joined together. Oversight then began by PMS-429. In 1999, oversight was discontinued, as PM4 became a division within PMS-429. In 2000, another reorganization moved PMS-429 from PEO-TSC and joined it to the Program Executive Officer for Surface Strike, PEO-(S). The office designation changed from PMS-429 to PMS-529. In November 2002, PMS-529 was migrated to the newly formed PEO IWS. In January 2003, PMS-529 was redesignated to PEO IWS3C, the Naval Surface Fire Support Office. In July 2004, it renamed the Naval Gunnery Project Office. In August 2007, the Program Management Office for Conventional Ammunition was transitioned from PM4 at Naval Surface Warfare Center (NSWC) Crane to PEO IWS3C at Washington Navy Yard with a contingent located at Picatinny Arsenal, NJ. This decision was part of an alignment to the BRAC 2005 decision to consolidate Navy Research, Development and Acquisition to Picatinny Arsenal, NJ. The Program Office was renamed to PM NCAS, the Office of the Program Manager for Navy Conventional Ammunition.

7.1.6.3 Fleet Support. The APM (PEO IWS3C/PM NCAS) is assigned responsibilities and provides policy for maintenance support for 2T COG conventional ammunition. NAVSUP GLS AMMO is assigned responsibilities and provides policy for inventory management, ordnance information systems, and logistics support of nonnuclear ordnance and equipment.

7.1.6.4 Lifecycle Management. The APM (PEO IWS3C/PM NCAS) is responsible for lifecycle management of 2T surface ammunition.

7.1.7 Command Relationships. Figure 7-1-1 depicts the chain of command relationships of the commands and activities involved in the processes of surface ammunition management. As each management area is explained in the following sections, the commands involved will be identified and their responsibilities listed.

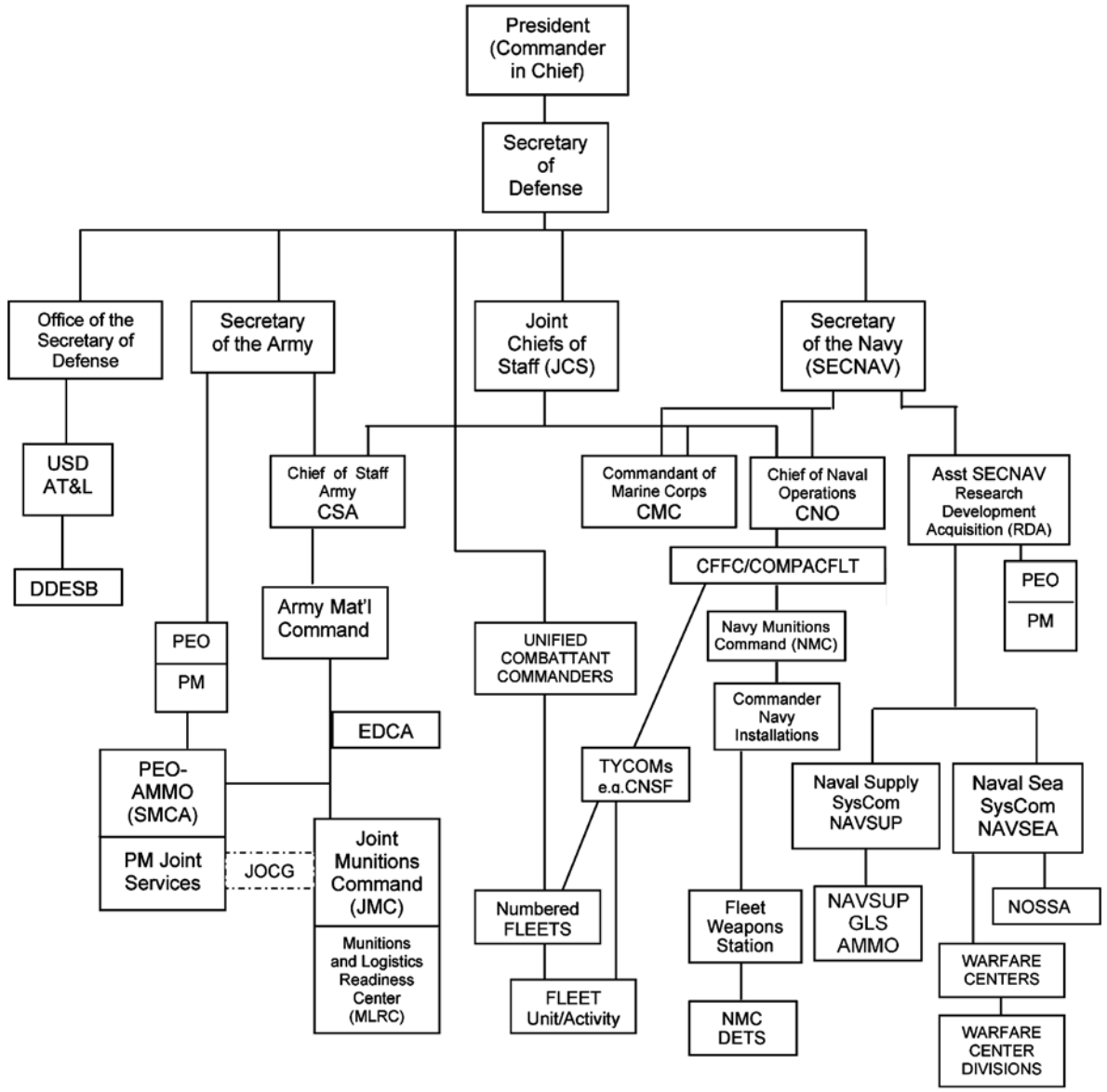

NOTES:

AMC	Army Material Command
ASN (RDA)	Assistant Secretary of the Navy for Research Development and Acquisition
CFFC	Commander Fleet Forces Command
CMC	Commandant of the Marine Corps
CNO	Chief of Naval Operations
CNSF	Commander Naval Surface Forces
CSA	Chief of Staff of the Army
DDESB	Department of Defense Explosive Safety Board
EDCA	Executive Director for Conventional Ammunition
JCS	Joint Chief of Staff
JMC	Joint Munition Command
JOCG	Joint Ordnance Commanders Group
MLRC	Munitions and Logistics Readiness Center
NAVSEA	Naval Sea Systems Command
NMC	Navy Munitions Command
NAVSUP GLS AMMO	Naval Supply Systems Command Global Logistics Support
NOSSA	Naval Ordnance Safety and Security Activity
PEO	Program Executive Officer
PM	Program Manager
SECNAV	Secretary of the Navy
SMCA	Single Manager for Conventional Ammunition
TYCOM	Type Commanders
USD (AT&L)	Under Secretary of Defense for Acquisition Technology and Logistics
WPNSTA	Weapons Station

Figure 7-1-1. Command Relationships

CHAPTER 7.2

Department of Defense Interfaces

Table of Contents

Paragraph	Subject	Page
7.2.1	General	7-2-1
7.2.2	Single Manager for Conventional Ammunition	7-2-1
7.2.3	Joint Ordnance Commanders Group	7-2-5
7.2.4	Department of Defense Explosive Safety Board	7-2-7

List of Illustrations

Figure	Title	Page
7-2-1	JOCG Organizational Structure	7-2-8

CHAPTER 7.2

Department of Defense Interfaces

7.2.1 General. To fully understand how the Navy manages surface ammunition, an understanding of essential groups and organizations that have been formed at the DOD level is required. This chapter will identify those groups and organizations and explain their role in ammunition management.

7.2.2 Single Manager for Conventional Ammunition.

7.2.2.1 Background. The origin of the single manager concept was the perceived need to achieve significant economies by consolidating duplicative management within the supply systems of the military services. Each service independently procured, stocked, and disposed of common support items (nuts, bolts, screws, etc.), as well as the more sophisticated and expensive commonly used items. Duplication of functions also extended to principal items, such as non-nuclear ordnance. The problem of duplicate item management became even more pronounced as items increased in number and complexity. Long-standing conditions of item dispersal and misdistribution, multiple procurements, lack of standardization, and poorly coordinated production base planning, among other things, highlighted the need to place such items under a single manager organization. This was the Defense Supply Agency (DSA) and its network of commodity-oriented support centers. DSA became the Defense Logistics Agency (DLA) in 1977. To streamline ordnance management, DOD 5160.65-M designates the Secretary of the Army as the SMCA. The Secretary of the Army has the power to delegate, within the Army, those authorities for the performance of the functions outlined in DODD and DODI. Today's SMCA objectives specified in DODD 5160.65 include the following:

a. Achieve the highest possible degree of efficiency and effectiveness in the DOD operations required to acquire top quality conventional ammunition for U.S. Forces.

b. Integrate the wholesale conventional ammunition logistics functions of the Military Departments to the maximum extent practicable, thereby eliminating unwarranted duplication and increasing the efficiency and effectiveness of the overall conventional ammunition program. Manage and invest in an integrated logistics base supporting assigned conventional ammunition requirements.

c. Use acquisition strategies that stabilize the business environment and provide incentives for private investment in the production base. Rely on the private sector to create and sustain ammunition production assets in response to production contracts and justify for contingency readiness expanded production capability. To the maximum extent feasible, transition government owned ammunition production assets to the private sector while preserving the ability to conduct explosives handling operations safety.

7.2.2.2 Charter. The Charter of the SMCA, 16 August 2004, states "The SMCA mission, as outlined in DODD 5160.65, is to perform DOD conventional ammunition mission functions, as defined in DODI 5160.68." Mission functions include: Acquisition (including research, develop-

ment, test and evaluation; Technical Data/Configuration Management; production base), wholesale logistics integration (including supply, distribution, transportation and handling, storage, quality assurance, maintenance, safety, security, renovation), demilitarization and disposal, financial management (planning, programming, budgeting, and execution), personnel and unit training, and implementing regulations and assessment. DODI 5160.68 states that for wholesale inventories, the single manager would do the following:

a. Provide the specific inventory management functions defined below for assigned conventional ammunition stored at SMCA facilities. These functions may be provided for Military Service-retained items on a cost reimbursable basis, as allowed by DODI 4000.19.

(1) Responsibility for custodial accountability for assigned conventional ammunition. The SMCA is relieved of custodial accountability on receipt by the Military Service-accountable officer at the first retail point or consumer level.

(2) Report, as required by the Military Services, the status of assigned Military Service-owned assets.

(3) Perform physical inventories per DOD 5100-76-M.

b. Operate SMCA installations and facilities to support the Military Services' conventional ammunition stockpile.

c. Maintain a wholesale distribution system for meeting projected needs of the Military Services.

d. Issue wholesale stocks based on documentation transmitted by the Military Services.

7.2.2.3 SMCA-Assigned Ammunition. Department of Defense Instruction (DODI) 5160.68 assigns the following conventional ammunition items to the SMCA: small arms, mortar, automatic cannon, artillery and ship gun ammunition; bombs; unguided rockets, projectiles, and submunitions; chemical ammunition with various fillers; land mines; demolition material; grenades; flares and pyrotechnics; all component items such as explosives, propellants, warheads (with various fillers, such as high explosive, illuminating, incendiary, anti-material, and anti-personnel), fuzes, boosters, and safe and arm devices in bulk, combinations, or separately packaged items of issue for complete round assembly; and related ammunition containers, packing and packaging materials.

7.2.2.4 Service-Retained Ammunition. Certain ordnance items are specifically excluded from the SMCA assignment and are retained for service management. The non-SMCA items are: guided projectiles, rockets, missiles, and submunitions; Naval mines, torpedoes, depth charges; nuclear ammunition and included items such as warhead, warhead sections, projectiles, demolition munitions, and nuclear training ammunition; cartridge and propellant actuated devices; chaff and chaff dispensers; guidance kits for bombs and other ammunition; swimmer weapons; explosive ordnance disposal tools and equipment; and their related ammunition containers, packing and packaging materials.

7.2.2.5 SMCA Responsibilities. The Secretary of the Army delegated authorities conferred by DODI 5160.68 and Section 806 of the Strom Thurmond National Defense Authorization Act for Fiscal Year 1999 to the Assistant Secretary of the Army Acquisition Logistics and Technology (ASAALT) https://webportal.saalt.army.mil. The execution of these responsibilities is further

delegated to the U.S. Army Program Executive Office, Ammunition (PEO-Ammo) as the SMCA Executor. ASAALT delegated the mission of monitoring and assessing the execution of the SMCA mission function to the Executive Director for Conventional Ammunition (EDCA) http://www.amc.army.mil/edca. The EDCA monitors and assesses the execution of the SMCA mission as it relates to joint service activities. The Commanding General (CG), Joint Munitions Command (JMC), is delegated the responsibility for the conduct of SMCA field operations. Field Activities supporting the SMCA consist of ammunition arsenals, activities, depots, and plants under the control of JMC.

7.2.2.6 SMCA Executor. The SMCA Executor (PEO Ammo) is responsible for the overall execution of the Army's SMCA mission. The SMCA Executor will integrate and execute the SMCA functions outlined in DODI 5160.68 for the Services to include:

a. Provide support for the Military Services required in planning, programming, and budgeting for resources necessary to accomplish their responsibilities as specified in DODI 5150.68.

b. Develop and implement processes for integrated planning and prioritization of Services SMCA assigned ammunition requirements.

c. Ensuring that the Military Services interests are fairly and appropriately represented in SMCA activities (e.g. Configuration Control Boards, Source Selection, Quality Reviews, etc.).

d. Providing the mechanisms and processes to link all stakeholders participating in SMCA activities into a single enterprise to support and improve the Military Services needs in wartime and peacetime operations.

e. Managing and executing the authority conferred by Section 806.

7.2.2.7 Executive Director for Conventional Ammunition. The ASAALT has designated the U.S. Army Materiel Command (AMC) Deputy Commanding General as the EDCA. Responsibilities include oversight and assessment of the SMCA Executor in the execution of the mission responsibilities. The EDCA shall be supported by a joint-staffed office of senior service military and civilian ammunition management specialists. The office of the EDCA assists in the execution of the assigned mission to include:

a. Monitor and assess the performance of the SMCA Executor in the execution of mission responsibilities to include reporting findings and providing recommendations to the appropriate stakeholders.

b. Review and assist in resolution of Military Service issues and concerns that cannot be resolved by the SMCA Executor.

c. Participate as a Military Service advocate as required to accomplish the SMCA mission.

d. Coordinate with the Military Services and secretaries, as well as Office of the Secretary of Defense (OSD) staff members, in matters relating to the SMCA mission.

e. Participate as a Military Service advocate in joint service and OSD activities related to SMCA policy and business practices for both peacetime and wartime to include supporting the Joint Logistics Commanders through the Joint Ordnance Commanders Group (JOCG).

f. The EDCA will furnish an annual fiscal year report to the Military Services and OSD staff on execution of the SMCA mission, with emphasis on measurable accomplishments, problem areas and required actions. The report is due by the last day of January of each year.

7.2.2.8 SMCA Field Operating Activity (FOA). The SMCA FOA is responsible for providing logistics and sustainment support to the SMCA Executor and Military Services.

a. Munitions and Logistics Readiness Center (MLRC). The MLRC is responsible to the CG, JMC for execution and management of the SMCA mission for producing, storing, maintaining, and demilitarizing ammunition for all Military Services. The MLRC has the following responsibilities for the execution of SMCA operations:

(1) Act as principal advisor to the CG for all matters pertaining to ammunition supply, maintenance, transportation, customer support, SMCA management, and to ensure execution of the Command ammunition mission.

(2) Coordinate actions for the execution of the SMCA program with all subordinate organizations.

(3) Act as ammunition management and transportation manager for the JMC.

(4) Monitor the progress of critical and high priority armament programs to assure an orderly and timely transfer of procurement and production programs to assure uninterrupted support to the field.

b. Security Assistance Directorate. The JMC Security Assistance Directorate serves as the focal point for the Security Assistance Program for selected countries/international organizations. The directorate also intensively manages, plans, schedules, directs, coordinates, monitors and controls all Foreign Military Sales (FMS) ammunition programs.

7.2.2.9 SMCA Navy Liaison Office (NVLNO). The MLRC and Security Assistance Directorate are supported by joint Service liaison offices staffed by U.S. Air Force, U.S. Marine Corps, and U.S. Navy officer and enlisted personnel. The NVLNO, a Detachment of the Naval Supply Systems Command Global Logistics Support (NAVSUP GLS AMMO), Ammunition is the on-site representative for ammunition and weapons material. The NVLNO is the principal point of contact for all Navy activities, Fleet and shore-based, for oversight and issue resolution with the JMC. It is also the principal support office in assisting the JMC in communicating with and resolving issues concerning Navy activities dealing with the SMCA. The NVLNO is responsible for the following:

a. Participating in JOCG and SMCA policy formulation and directives, instruction, and Joint Conventional Ammunition Policies and Procedures (JCAPP) development; providing liaison for action by Navy representatives to the various JOCG/SMCA action groups; and attending JOCG/SMCA meetings, as necessary, to comment on and track changes in SMCA operating policies and procedures. This includes the following:

(1) Acting as the focal point between the JMC and NAVSUP GLS AMMO on the development and implementation of Joint Service Support Agreements.

(2) Ensuring provision of Navy representatives for all Joint Committees and Groups operating under or in support of SMCA operations.

b. Monitoring the execution of Navy requirements by the JMC/SMCA, and facilitating the solution to any problems thereto.

c. Acting as the JMC on-site Navy representative on all matters in the development, facilitization, modernization, procurement, production, distribution, maintenance, and demilitarization of non-nuclear ordnance which impact the Navy.

d. Representing the Navy in all JMC/SMCA allocation actions affecting Navy items and providing the interface with Navy customers of the SMCA to identify Surge Planning and Industrial Preparedness Planning (IPP). This includes the following:

(1) Coordinating, planning, and executing joint service exercises involving JMC/SMCA and Navy activities.

(2) Maintaining liaison for problem resolution with U.S. Navy storage activities regarding pending and actual shipments of Navy material from or to Army activities. Coordinating priority movement of ordnance items when requested by Navy inventory or Program Managers (PMs). Monitoring and providing recommendations on all requests for disposition of Navy material.

(3) Assisting JMC personnel in the establishment of and monitoring Electronic Data Transfer of information between the JMC and Navy activities and organizations.

7.2.3 Joint Ordnance Commanders Group. https://www6.osc.army.mil/jg/jdmenu.asp.

7.2.3.1 Purpose. The JOCG is chartered by the Joint Logistics Commanders (JLC) to maintain awareness, influence and guide management and execution of conventional ammunition programs including the munitions/weapons interface. The JOCG's responsibilities cover the entire spectrum of conventional ammunition life cycle management, including matters pertaining to the operations of the SMCA. The JOCG identifies, recommends, and/or directs implementation of joint sponsorship or management to reduce cost, increase effectiveness, and ensure interoperability and/or interchangeability of conventional ammunition systems, and to develop and continuously improve joint processes and procedures. The definition of conventional ammunition is as defined in Department of Defense Directive (DODD) 5160.65, Subject: Single Manager for Conventional Ammunition.

7.2.3.2 Mission. The JOCG provides a forum where all conventional ammunition life cycle stakeholders, including the top process owners from its member commands and associated or related organizations, jointly define and improve munitions systems. The underlying objective is to identify, implement or recommend for implementation joint opportunities to reduce cost, increase effectiveness and ensure interoperability and/or interchangeability of munitions systems. The JOCG will:

a. Advocate for jointness in conventional ammunition.

b. Develop and implement a transformation strategy that encompasses plans and actions that have the aim of inducing, sustaining and exploiting revolutionary change required to acquire and equip the collective DOD stakeholders with quality conventional ammunition.

c. Function as conventional ammunition strategic planning forum for transformation of joint policy, procedures and projects.

d. Strive for information dominance by providing an essential forum for conventional ammunition information and decision processing.

e. Provide senior ordnance leaders a source for analysis and planning in concert with Service/joint/combined forces requirements.

f. Scrutinize the conventional ammunition environment throughout DOD for forces of change and transformation opportunities.

g. Coordinate Service and joint developments in doctrine and systems, subsystems and components, and increase its role in influencing and shaping policy.

h. Identify programs and projects for joint sponsorship or management, and implement or recommend for implementation those in which a common need exists, where differing requirements can be reconciled, or where economies and/or improvements can be obtained.

i. Coordinate and reconcile Service, OSD and Combatant Command policies.

j. Advocate effective use of the National Technology Industrial Base.

k. Advocate the transition of conventional ammunition to the SMCA.

7.2.3.3 Responsibilities. To accomplish its objectives the JOCG does the following:

a. The JOCG will develop and implement a transformation strategy that encompasses plans and actions, which have the aim of inducing, sustaining, and exploiting revolutionary change required to acquire and equip the collective DOD stakeholders with quality conventional ordnance. The JOCG will jointly review all development, acquisition and production, or support activities of military munitions systems, subsystems, and components identified in DODD 5160.65. The JOCG will function as a joint Service munitions strategic planning cell identifying programs and projects for joint sponsorship or management and implement, or recommend for implementation, those in which a common need exists, where differing requirements can be reconciled, or where economies and/or improvements can be identified. When all of the preceding criteria cannot be satisfied, the JOCG will not recommend joint program operation, but will ensure that inter-Service coordination and exchange of information is optimized and duplication of effort is minimized.

b. The JOCG will develop uniform and standard conventional ammunition policies and procedures for the missions, functions, and responsibilities assigned to the SMCA and Military Services in DODD 5160.65 and DODI 5160.68. The JOCG is the approval authority for all JCAPPs and will coordinate and take action on matters pertaining to the operations of the SMCA. The JOCG will develop and provide to the JLC standardized practices of munitions management for the Services adoption, as they deem appropriate.

(1) In January 2006 the JOCG JCAPPs have been approved by the Office of the Under Secretary of Defense (Acquisition, Technology and Logistics) as an alternative to the corresponding chapters of the DOD 5160.65-M, SMCA (Implementing JCAPPs). Approved JCAPPs are available on the JOCG web site at: https://www6.osc.army.mil/jg/jdmenu.asp.

c. The JOCG will coordinate activities with other JLC groups, as appropriate.

d. The JOCG, as directed by the JLC will assume responsibility for the operation of certain JLC panels and coordinating groups. The JOCG will manage to completion these subgroups and take appropriate action to disestablish subgroup(s) or place continuing tasks on a staff-to-staff basis. The JOCG may also charter groups and panels as necessary to execute its mission.

e. The JOCG may enter into Memoranda of Agreement with Non-JLC chartered groups and panels, where appropriate, to support assigned munitions related activities.

7.2.3.4 Membership. The Principal JOCG members are the commanders or their designated representatives of the following:

a. Army:

(1) Commander, US Army Joint Munitions Command

(2) PEO-Ammo

b. Marine Corps: Commanding General, Marine Corps Systems Command

c. Navy:

(1) Director, Supply, Ordnance and Logistics Division, CNO (Logistics)

(2) Deputy Commander, Warfare Engineering, Naval Sea Systems Command

d. Air Force: Commander Air Armament Center, Air Force Material Command

7.2.3.5 U.S. APM for Joint Services. Staff to the SMCA Executor, U.S. Army PEO-Ammo, PM Joint Services is the principal customer advocate between the SMCA FOA (JMC) and the Military Services. His direct interfaces include JMC Deputy for Support Operations (G-3) and Chief, Navy Gun 5 Inch Bombs and Energetics. Other direct interfaces include the EDCA, PM Demilitarization (DEMIL), Business Management and the Military Service Liaison positions located at the JMC. PM Joint Services also performs duties as the JOCG Executive Committee Secretariat.

7.2.3.6 Organizational Structure. The organizational structure of the JOCG including subgroups and adhoc groups is shown in Figure 7-2-1.

7.2.4 Department of Defense Explosive Safety Board

7.2.4.1 The Office of Secretary of Defense (OSD) is responsible, by law, for explosives safety within the Department of Defense (DOD) as directed in Title 10, Subtitle A, Part I, Chapter 7, Section 172 of the United States Code (USC). This law directs that the OSD is responsible for the establishment of the Department of Defense Explosives Safety Board (DDESB). To comply with this law, the OSD published DOD Directive 6055.9, which gives the DDESB the authority to dictate Explosives Safety Policy and set uniform standards in explosives safety within DOD. Detailed information on DDESB processes can be found in NAVSEA OP 5 Volume 1 and DODI 6055.16.

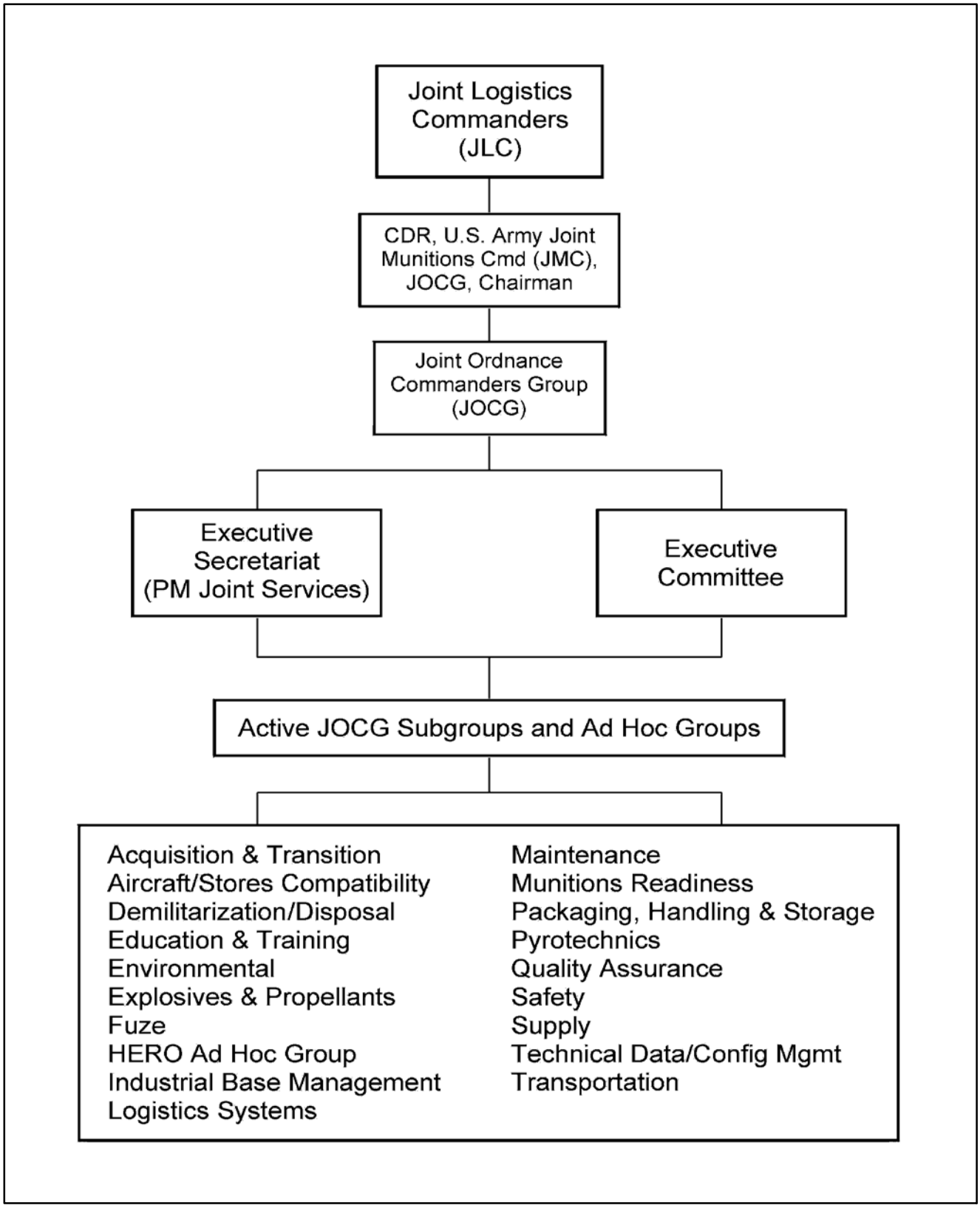

Figure 7-2-1. JOCG Organizational Structure

CHAPTER 7.3

Management Information System Links

Table of Contents

Paragraph	Subject	Page
7.3.1	Ordnance Information System	7-3-1
7.3.2	OIS-W Links	7-3-2

List of Illustrations

Figure	Title	Page
7-3-1	OIS-W Links	7-3-3

CHAPTER 7.3

Management Information System Links

7.3.1 Ordnance Information System.

7.3.1.1 General. As discussed in NAVSUP P-724, the OIS is an integration of ordnance logistics systems used by Navy and Marine Corps for ordnance asset management and accountability. The OIS is comprised of integrated applications and distributed databases providing controlled global access, wherein a single action results in system-wide update. OIS is managed by NAVSUP GLS AMMO.

7.3.1.2 OIS-W. Classified OIS-W is the single repository for worldwide status of Navy expendable non-nuclear ordnance requirements, assets, production, expenditures, costs, and technical inventory management data, regardless of inventory management or ownership responsibilities. OIS-W supports the ammunition management information needs of the stockpile managers, Acquisition/Program Managers, OPNAV, Systems Commands (SYSCOMS), Marine Corps (Aviation), Fleet Commanders (FLTCOMs), Type Commanders (TYCOMs), and other Major Claimants.

7.3.1.3 OIS-W provides the capabilities to:

a. Maintain a central record of stock status information (including serviceable and non-serviceable assets) updated daily by transaction reports from all holders of Navy-owned assets.

b. Maintain a central record of worldwide asset positions and expenditures updated at appropriate intervals in accordance with current requirements.

c. Maintain a central record of material in-transit between contractors and Naval activities, and in-transit among Naval activities, updated daily.

d. Maintain a central record of material in production, procurement, or under renovation, updated daily.

e. Maintain a central technical data file for inventory management functions as a source for Navy Stock Lists; change notice cards; packaging, safety and transportation management publications; and for use in stratification, budgeting, readiness determinations, and component requirement computations, and as a basis for selecting or recommending substitutions or alternate items for requisitioning, stratification, or budgeting process.

f. Maintain a central record of ammunition storage capabilities for use in measuring storage capabilities against requirements.

g. Maintain a central record of actual and potential production capabilities of Navy and selected commercial producers.

h. Provide for adequate protection of data against such contingencies as fire, inadvertent file destruction, loss of power, etc.

7.3.1.4 Information available in OIS-W:

a. New stock number, Navy Ammunition Logistics Code (NALC) and Department of Defense Identification Code (DODIC) assignments, Change Notice Bulletins, and technical characteristics.

b. Quantity on hand, location (including in-transit) due-in, condition, receipts, issues, serial number and configuration data for serialized weapons/components, reservations, or restrictions, etc.

c. Tracking of due-ins based on scheduled delivery dates, generates Prepositioned Material Receipt Cards, processes shipment/performance notification, and computes administrative and production lead-time.

d. Tracking of requisitions, modifications, referrals, follow-ups, shipping status, issues, receipts, cancellations, Material Release Orders (MROs), and results of the cross-decking of assets.

e. Financial inventory accounting and billing functions.

f. Receipt transactions from commercial procurement, receipt from storage locations, issue of material from stock, increase/decrease adjustments, dual adjustment transactions, re-identification of stock, asset status cards, for further transfer, material.

g. History of items, segments or lots of explosive, ordnance/material declared as a safety hazard, unsuitable for use or suspended for any reason.

h. Identification and document transfer of unserviceable or excess/surplus material from inventory to disposal account.

i. Identification and tracking ammunition loads to support ship and organizational mission.

j. Distribution of major Continental United States (CONUS) assets based on requirements and the assets held by the Major Commands.

k. Monthly reporting of OIS-W assets by Lot Number.

l. Tracks and budgets Outside Continental United States (OCONUS) transportation requirements/shipments.

m. Comparison of ammunition to inventory assets requirements to determine excess inventory.

n. Provides for the processing, monitoring, reconciliation and generation of physical inventory transactions for current stock records.

o. Tracks requirements and allows users to group similar NALCs for asset and expenditure retrievals/reports through Control Number processing.

p. Tracks training requirements, allocations and expenditures.

7.3.2 OIS-W Links. OIS-W, as the central, single-point reference for Navy ordnance, is the major automated system linking all of the other automated systems being used by the Navy for ordnance management functions. The other automated systems and their type of link to OIS-W is identified in Figure 7-3-1.

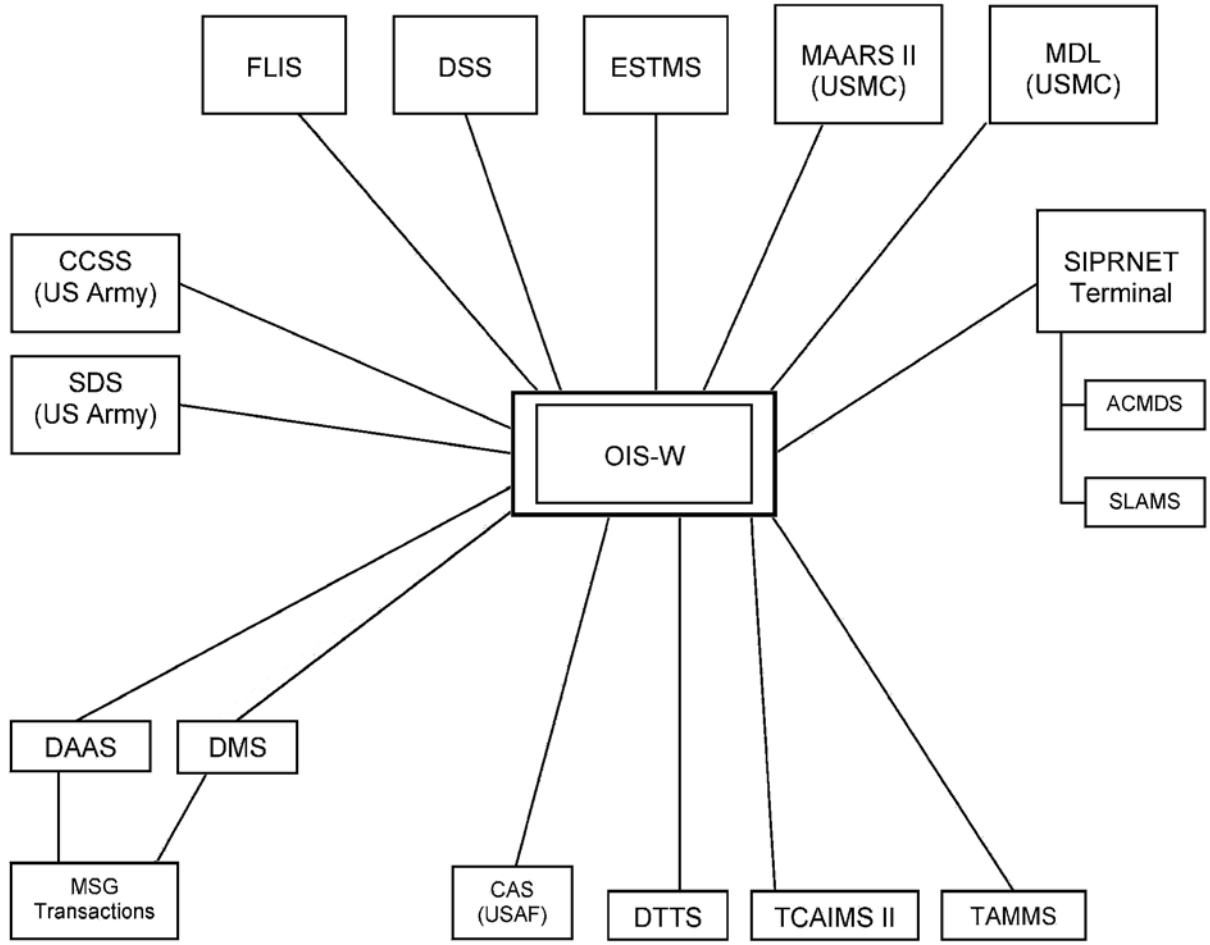

NOTES:

ACMDS	Automated Configuration Management Data System
CAS	(US Air Force) Combat Ammunition System
CCSS	(US Army) Commodity Command Standard System
DAAS	Defense Automatic Addressing System
DMS	Defense Messaging System
DSS	Distribution Standard System
DTTS	Defense Transportation Tracking System
ESTMS	Explosives Safety Technical Manual System
FLIS	Federal Logistics Information System
MAARS II	(USMC) Marine Corps Ammunition Accounting/Reporting System
MDL	(USMC) Marine Air Ground Task Force (MAGTF) Data Library
OIS-W	Ordnance Information System-Wholsale
SDS	(US Army) Standard Depot System
SLAMS	Surveillance, Lot Acceptance & MAERU (Test Database) System
TAMMS	Total Ammunition Movement Management System
TCAIMS II	Transportation Coordinator's Automated Information for Movement System II

Figure 7-3-1. OIS-W Links

a. When available, OIS is the method to link with OIS-W for all ship and shore activity asset management and reporting requirements. Reporting activities can also link with OIS-W by transmission of data via Naval Message from local communications centers through the Defense Automatic Addressing System (DAAS) https://www.daas.dla.mil/daashome. DAAS acts as a redirector for non-OIS activity message Ammunition Transaction Reports (ATRs), sending them to their appropriate destination(s). DAAS receives other message ordnance data (i.e. requisitions), processes them, and then forwards them to the appropriate destination(s) as well. OIS equipped activities can process either Transaction Item Reports (TIRs) or ATRs. The status of Military Standard Requisitioning and Issue Procedures (MILSTRIP) requisitions that have been processed through DAAS can additionally be tracked using a web-based tool developed by the Defense Automatic Addressing System Center (DAASC). Contact DAAS to determine the best account for your activity.

b. Most activities have transitioned to the Defense Messaging System (DMS). NAVSUP P-724 includes guidance regarding interface with DMS.

7.3.2.1 OIS-W System Interfaces. OIS-W interfaces with other information systems to receive and exchange inventory and technical data and related information. These systems are:

a. Distribution Standard System (DSS)

b. Federal Logistics Information System (FLIS)

c. U.S. Army Commodity Command Standard System (CCSS)

d. U.S. Army Standard Depot System (SDS)

e. OIS

f. Marine Corps Ammunition Accounting/Reporting System (MAARS-II)

g. Explosive Safety Technical Manual System (ESTMS)

h. Marine Air Ground Task Force (MAGTF) Data Library (MDL)

SECTION 8

Program Management

Table of Contents

Chapter	Subject	Page
8.1	General	8-1-1
8.2	Requirements Determination	8-2-1
8.3	Industrial Preparedness Planning	8-3-1
8.4	Non-Combat Expenditure Program	8-4-1
8.5	The Planning, Programming, Budgeting and Execution System	8-5-1

CHAPTER 8.1

General

Table of Contents

Paragraph	Subject	Page
8.1.1	Perspective	8-1-1
8.1.2	Public Laws	8-1-1
8.1.3	Organizational Relationships	8-1-2
8.1.4	Types and Purposes of Appropriations	8-1-2
8.1.5	Direct and Reimbursable Budget Plans	8-1-5

List of Illustrations

Figure	Title	Page
8-1-1	Program Management Organizational Relationships	8-1-3

CHAPTER 8.1

General

8.1.1 Perspective. There are many facets to managing the ammunition program for the Navy. Each of the following chapters in this manual covers a different facet of ammunition management (acquisition, maintenance, logistics, disposal, etc.). This chapter on program management is the aggregation of the financial management portion of each of the different facets. The primary focus of program management is to define a balanced program of acquisition, maintenance, and expenditure for each assigned ammunition item. The personnel responsible for program management are responsible for supporting the defined program through the levels of budget reviews resulting in annual Congressional authorization and appropriation acts.

8.1.1.1 Regulation. The Financial Management Regulation, Department of Defense (DOD) 7000.14R, is the governing regulation for all financial management policies and procedures. The DOD regulation should be referred to for clarification and ensuring you have the latest guidance and requirements. The following are general policies and excerpts from this regulation for information purposes.

8.1.1.2 Program Issues. Many issues are faced by those responsible for program management, some of which are outside their scope of control. The defined program must be continually adjusted from year to year to compensate for these external issues. A few of the biggest issues faced on a recurring basis include the following:

a. Undistributed Budget Cuts. A program's share of an undistributed budget cut passed down from the Navy's Financial Manager must be absorbed and changes made to the program in the out years to make up for the cut.

b. Congressional Budget Changes. A program is often changed by Congressional action for reasons other than those used to determine program requirements. Programs must be adjusted to account for these pluses or minuses, or shifts from one part of the program to another.

c. Production Problems. Funds budgeted for procurement of an item, which is in production and experiencing problems affecting the delivery schedule, are usually cut or deferred to later years during the budget review process. The managers get the opportunity to reclaim these cuts or deferments. If they are not successful in getting the funds restored, they must adjust their defined program accordingly.

8.1.1.3 Issue Impact. These issues listed above, and many more, greatly impact the Program Managers (PMs) ability to prudently manage the assigned program. The impact of these changes is often the inability to achieve or maintain a defined inventory objective to support Fleet requirements.

8.1.2 Public Laws. Laws and requirements have been passed by the U.S. Congress affecting accounting and financial management practices. The following Acts have a direct bearing on the processes used in ordnance program management.

8.1.2.1 Federal Managers Financial Integrity Act of 1982 (FMFIA). The FMFIA requires that each Executive Agency conduct annual evaluations to determine the adequacy of its systems of internal accounting and administrative controls. See: http://www.dod.mil/comptroller/fmfia/index.html.

8.1.2.2 Chief Financial Officers Act of 1990 (CFO Act). The CFO Act focuses attention on the need for a strong financial management function. The Department of the Navy (DON) is required to prepare financial statements for its trust and revolving funds according to generally accepted accounting principles established by the Federal Accounting Standards Advisory Board. See: http://www.cfoc.gov/documents/doc_cfo_act1990.htm and http://www.cfoc.gov/.

8.1.2.3 Government Performance and Results Act of 1993 (GPRA). GPRA requires the systematic identification of output and outcome measurement in budget formulation and management. It also requires federal agencies to set performance goals and to relate those goals to budget requests and to actual results. See: http://www.whitehouse.gov/omb/mgmt-gpra/gplaw2m.html.

8.1.3 Organizational Relationships. The organizations involved in program management are somewhat static from year to year. However, many of the personnel involved in the funding chain processes in the Financial Manager and Congressional offices change from year to year. This continual turnover of personnel provides a significant challenge to the PM. The PM must ensure that the surface ammunition programs are adequately defined to preclude changes during the review process, based on a lack of understanding. Figure 8-1-1 identifies the organizations involved in the program management processes and their relationship to each other. The following sections will describe the program management processes and identify the organizational responsibilities for those processes.

8.1.4 Types and Purposes of Appropriations. The Navy receives appropriations included in the DOD Appropriations Act. These appropriations are annual, multiple year, or no-year. The language of each appropriation has evolved over the years to express precisely the purposes for which the funds are legally available, in accordance with the intent of Congress regarding the use of appropriated funds. Despite the wide variety of naval programs, the text for each appropriation is relatively brief. Such brevity is possible due to the statutory references to basic authorizing legislation and because of the cumulative history of legal interpretation of the words and phrases. The ammunition programs are programmed, budgeted, and executed within the structure of the following appropriations as defined by Congress. The appropriations involved in ordnance management include the following:

8.1.4.1 Research, Development, Test, and Evaluation, Navy (RDT&E,N). The term "Research and Development (R&D)" is intended broadly to include the work performed by a government agency or by private individuals or organizations under a contractual or grant arrangement with the government.

a. Research is systematic study directed toward fuller scientific knowledge or understanding of the subject studied.

b. Development is the systematic use of the knowledge and understanding gained from research, for the production of useful materials, devices, systems, or methods, including the design and development of prototypes and processes. RDT&E,N appropriation is defined as follows:

> "RDT&E will finance research, development, test and evaluation efforts performed by contractors and government installations, including procurement of end items, weapons, equipment, components, materials and services required for development of equipment or material."

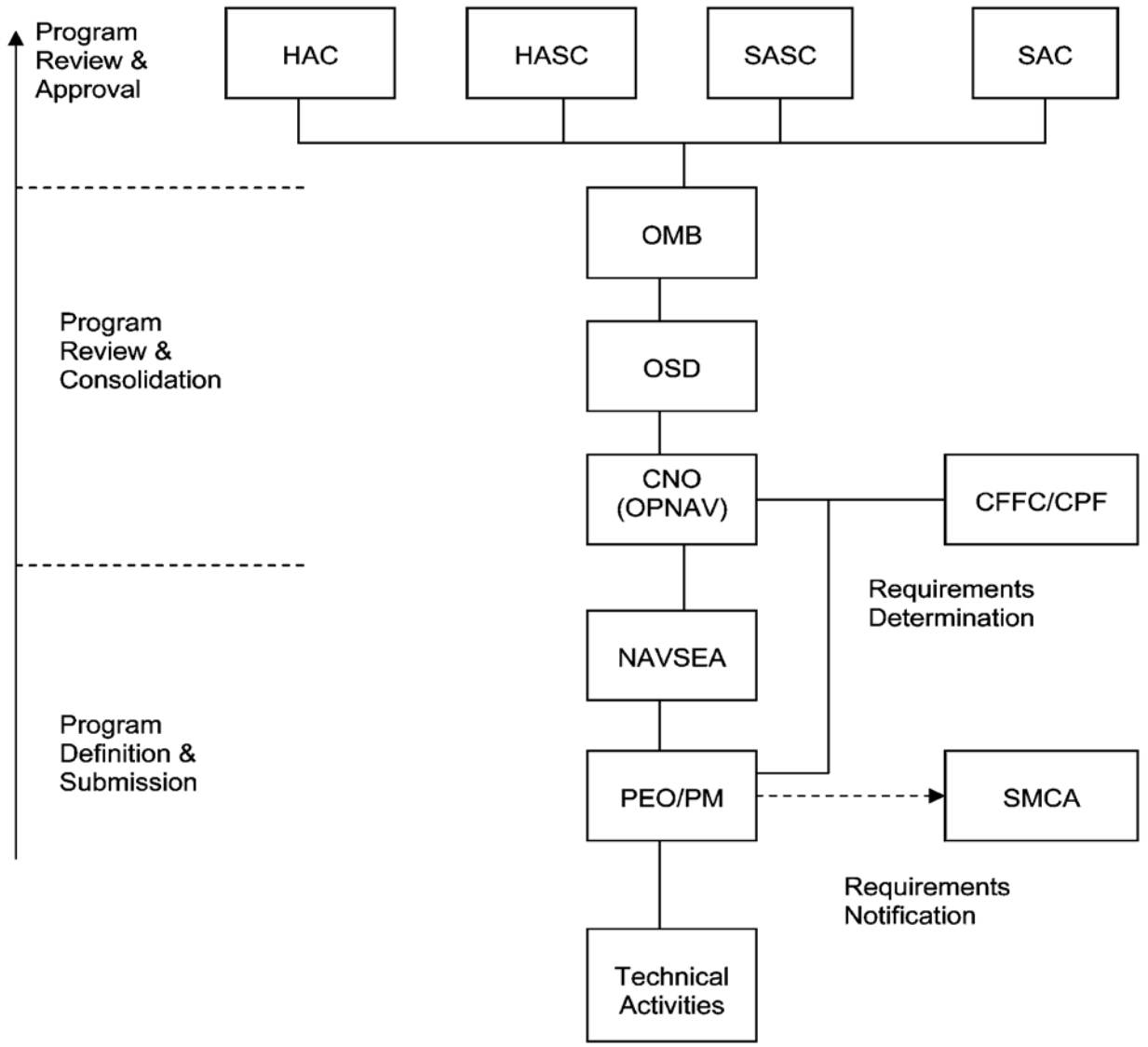

NOTES:

CNO	Chief of Naval Operations
HAC	(Congressional) House Appropriations Committee
HASC	(Congressional) House Armed Services Committee
NAVSEA	Naval Sea Systems Command
OMB	(Executive) Office of Management and Budget
OSD	Office of the Secretary of Defense
PEO/PM	Program Executive Officer/Program Manager
SAC	(Congressional) Senate Appropriations Committee
SASC	(Congressional) Senate Armed Services Committee
SMCA	Single Manager for Conventional Ammunition

Figure 8-1-1. Program Management Organizational Relationships

(1) Time Limitations:

Approp	New Obligation Unexpired	Years For Obligation Adjust & Disburse. Expired	Closed End of Year Cancelled
RDT&E	2	3 to 7	7

(2) Funding Coverage. Funding under the RDT&E,N appropriation is required for developing new ordnance items or components which are not currently in the programmed procurement plan.

8.1.4.2 Procurement, Ammunition Navy, Marine Corps (PAN-MC). The DOD Appropriation Act provided language for the PAN-MC appropriation commencing in FY 95. Per the DOD Financial Management Regulation, the criteria for cost definitions consider the intrinsic or innate qualities of the item such as durability in the case of an investment cost. Investments are the costs that result in the acquisition of, or addition to end items. These costs benefit future periods and generally are of a long-term character. Investments are costs to acquire capital assets. All items of equipment, including assemblies, ammunition and explosives are classified as investments. The PAN-MC appropriation is used for ammunition procurement.

a. Time Limitations:

Approp	New Obligation Unexpired	Years For Obligation Adjust & Disburse. Expired	Closed End of Year Cancelled
PAN-MC	3	4 to 8	8

b. Funding Coverage. Funding under the PAN-MC appropriation covers the following ammunition management areas.

(1) Ammunition Procurement.

(2) Related Support Equipment Procurement.

(3) Acquisition Engineering.

(4) Product Improvement Programs.

8.1.4.3 Operation and Maintenance, Navy (O&M,N) Appropriation. The criteria for cost definitions consider the intrinsic or innate qualities of the item such as consumability in the case of an operating cost. Expenses are the costs incurred to operate and maintain the organization, such as personal services, supplies, and utilities. Expenses are costs of resources consumed in operating and maintaining the Department of Defense. The following guidelines shall be used to determine expense costs:

(1) Food, clothing and fuel

(2) Maintenance, repair, overhaul, rework of equipment.

a. Time Limitations:

Approp	New Obligation Unexpired	Years For Obligation Adjust & Disburse. Expired	Closed End of Year Cancelled
O&M,N	1	2 to 6	6

b. Funding Coverage. Funding under the O&M,N appropriation Budget Activity 7 covers the following ammunition management areas.

(1) Ordnance In-Service Management.

(2) Ordnance Inventory Management.

(3) Ordnance Logistics Management Support.

(4) Surface Wide Transportation (SWT).

(5) Ordnance Demilitarization/Disposal Management.

(6) Training.

8.1.5 Direct and Reimbursable Budget Plans.

8.1.5.1 Direct Budget Plan. Per DOD Financial Management Regulation this plan includes those items of material to be purchased for delivery to service inventory and those procurement programs that support the acquisition of material for U.S. forces. Financing for the direct budget plan is derived from: new budget authority provided by the Congress, the transfer of resources from other appropriations, and reimbursements. When dealing with reimbursements involving the sale of material, three situations can arise:

a. Replacement-in-Kind. In this situation an item of material is sold and will require replacement with an item of the identical type, model, and series or modified version of the same basic model. In this situation the reimbursement from the sale will be included in reimbursable financing and the buy-back of the item in the reimbursable program. There will be no reflection of this transaction in the Direct Budget Plan. For an ammunition item, the replacement-in-kind policy permits replacement of a round with any round that provides the same warfighting mission capability, providing the round to be purchased has been previously approved by the Congress for procurement, and the inventory objective presented to the Congress is not exceeded.

b. Replacement. In this situation an item of material is sold and will require replacement to compensate DOD inventories for the resultant loss of capability or readiness. Because of one or more circumstances, the replacement item will not be identical to the item sold. It must, however, be a later series or modified version of the same basic model, or an acceptable substitute item used in the requirements computations. In this situation the reimbursement for the sale will be

included under reimbursable financing but the buy-back of the replacement item must be shown under the Direct Budget Plan and must comply with reprogramming requirements.

(1) Items sold from inventory with a unit cost less than $5,000 will be treated as a replacement-in-kind if an improved model of the same end item is being procured, it provides the same warfighting capability, and the inventory objective being presented to Congress is not exceeded.

(2) If an item is eligible for replacement or replacement-in-kind and is not replaced, the reimbursement should be treated as a "free asset."

c. Free Assets. In this situation an item of material is sold and will not require replacement. All free assets from FMS transactions are required to be deposited into the Miscellaneous Receipts of the U.S. Treasury in accordance with 10 U.S.C. 114(c)(2).

8.1.5.2 Reimbursable Budget Plan. Per the DOD Financial Management Regulation, this plan includes those items of material to be purchased for delivery to and use by customers. Financing for the reimbursable budget plan is derived from:

a. Anticipated reimbursement based upon customer orders received for items (not stocked by or purchased for procuring service use) to be purchased for direct delivery to a customer. (Direct citation of customer funds for procurement against this type of order is encouraged where common components and/or common assemble with service production of similar items are not involved.)

b. Anticipated reimbursement based upon customer orders received or to be received for items common to the procuring service and customer, for direct delivery to the customer.

c. Where the materiel item is to be made available from on-order quantities under an existing contract, the sales transactions will be reflected as reimbursable transactions. The quantities and costs of the replacement procurement will be included in the reimbursable program.

d. Where the material item is to be made available directly from a contract awarded after the date of the sales agreement and the contract includes a particular quantity of the item to fulfill the sales agreement, the transaction will be reflected as a direct cite transaction.

e. In "Replacement-in-Kind" situations, the proceeds from the sale will be included under reimbursable financing and the buyback program will be included in the Reimbursable Budget Plan.

f. In "Replacement" situations, the proceeds from the sale will be included under reimbursable financing but the buy-back program will be included under the Direct Budget Plan (not the Reimbursable Budget Plan).

8.1.5.3 Funding Coverage. Funding under the Reimbursable program covers the following ammunition management areas.

a. Security Assistance Program.

b. Other Service use of Navy ordnance during joint exercises.

CHAPTER 8.2

Requirements Determination

Table of Contents

Paragraph	Subject	Page
8.2.1	General	8-2-1
8.2.2	Non-Nuclear Ordnance Requirements Process	8-2-1
8.2.3	Requirements Determination Responsibilities	8-2-5
8.2.4	Program Development	8-2-8

CHAPTER 8.2

Requirements Determination

8.2.1 General.

8.2.1.1 Characteristics and Principles. The requirements determination process is separate from the Planning, Programming, Budgeting and Execution System (PPBES) process, yet directly linked to the programming phase of the PPBES. To better understand the requirements determination process for non-nuclear ordnance, it is useful to bear in mind the following distinguishing characteristics and principles.

a. As the customer, the Chief of Naval Operations (CNO) and the Fleet define their respective needs in terms of the specific items, their quantities, the time frame they are needed, and their general distribution. As producers, the Program Executive Officers (PEOs) and PMs respond by providing the required items in a timely manner and ensuring their suitability and reliability for meeting intended needs. In this relationship, "service to the customer" and "support of the Fleet" is synonymous. To carry the analogy a step further, a service warranty exists between producer and user, in that the former maintains continuing responsibility for reliability, configuration control, and maintenance.

b. Requirements for surface ordnance are calculated on a principal-item basis. Threat and Level-of-Effort (LOE) war reserve material munitions requirements shall be computed to achieve targeting, kill, and post combat posture objectives approved in the Secretary of Defense (SECDEF) Defense Planning Guidance (DPG), as directed in Department of Defense Directive (DODD) 3110.06. This is in contrast to the requirements computation in other commodity areas where support levels are not directly prescribed. Other commodity requirements are computed by an Inventory Control Point (ICP) on a secondary item basis considering past demand, or the relationship of the support item to the end-item program data. In surface ordnance it is the user who specifies the requirement.

c. Programming, budgeting, and procurement requirements are calculated in terms of principal line items organized and summarized under control numbers (see Paragraph 12.3.2.3), grouping interchangeable Department of Defense Identification Codes (DODICs) or Navy Ammunition Logistics Codes (NALCs). Secondary item requirements (related subassemblies, components, etc.) are aggregated and included in the requirement for the principal item to which they relate.

d. Unlike other commodity areas, stratification does not have a significant role in computing individual item requirements for surface ordnance. Its primary use is to compare assets to requirements in order to isolate candidates for excess or disposal. The stratification process is described in Chapter 12-7.

8.2.2 Non-Nuclear Ordnance Requirements Process.

8.2.2.1 Development. The Navy's Non-Nuclear Ordnance Requirements (NNOR) process implements the DOD Munitions Requirements Process (MRP) described in Department of Defense Instruction (DODI) 3000.4. The NNOR is developed in accordance with OPNAVINST 8011.9A. The DOD MRP is initiated when Defense Intelligence Agency (DIA) publishes Threat Reports (TRs) for the operations specified in the current DPG and Contingency Planning Guidance

(CPG). The NNOR Study is developed by CNO, and coordinated with the operational plans of the respective Commander's PACFLT/LANTFLT and with the ordnance PEOs and Direct Reporting Program Managers (DRPMs). The NNOR, when approved and issued by CNO, is the Navy's basic planning guidance for developing the Program Objective Memorandum (POM) and for programming the planned support requirements. The NNOR displays by geographic area the forces, planning factors, and requirements for selected items.

8.2.2.2 Alterations. Requirements determination is a dynamic on-going process, complicated by the incidence of changes inherent in the PPBES. Consequently, the Navy must frequently recalculate and adjust its program requirements. These alterations involve changes in forces, factors, asset and procurement status, guidance, etc., or are incurred by the introduction of special projects. This state of flux begins with the generation of the POM and continues through the apportionment review, 15 to 18 months in the future.

8.2.2.3 DOD MRP. Per DODI 3000.4, the Secretary of the Navy will:

a. Collaborate with other Military Department Secretaries to develop standard target templates. Provide the target templates to DIA prior to the release of the Contingency Planning Guidance (CPG).

b. Review the TRs for completeness and accuracy of the near- and out-year threat data, including both quantitative and qualitative capabilities for each theater, and provide comments to the DIA.

c. Review the Combatant Commanders' near-year Phased Threat Distribution (PTDs) to ensure that they are aligned with the Operations Plan (OPLAN) concept (e.g. whether PTD percentages match operations concept).

d. Review the Chairman of the Joint Chiefs of Staff's (JCS) out-year PTDs to ensure that the out-year PTD is aligned with Navy modernization requirements.

e. Work directly with Office of the CNO (OPNAV) and the Combatant Commands to develop near- and out-year munitions requirements according to current DPG, CPG and the PTDs.

f. Provide near-year munitions requirements data according to prescribed formats, and a detailed description of the methodology used to compute those requirements, to the Chairman of the JCS, the Combatant Commanders, and OPNAV by March 15, annually. Total munitions inventory shall be included.

g. Provide out-year munitions requirements data according to prescribed formats and a detailed description of the methodology used to compute those requirements to the USD(AT&L), and D,PA&E, by March 15, annually. Total munitions inventory shall be included.

h. Use out-year munitions requirements as input to Navy POM munition investments.

i. Conduct a two-phase assessment of risk to overall warfighting success due to any differences between computed requirements and both current and programmed munition inventories. Use the risk assessment measures of effectiveness.

j. Provide munitions inventory projections to the Chairman of the JCS and USD(AT&L) 30 days after the POM is submitted.

8.2.2.4 Objectives. The objectives of the NNOR process are to determine ordnance requirements for combat and noncombat expenditures, and to provide for the allocation and positioning of assets in accordance with Fleet plans. The objectives include the following concepts.

a. The DPG directs implementation of this process.

b. The NNOR process allows Navy planners to base munitions requirements on the following concepts:

(1) A given force structure, armed to its designed military capability.

(2) The estimated quantity of munitions to defeat a specified threat with that force structure.

(3) The program objectives, for threat ordnance combat requirements are the war reserve requirements.

(4) The program objectives, for LOE ordnance combat requirements, are the war reserve requirements. LOE ordnance computations sustain a specific number of Days of Combat (DOC) as defined in Defense Planning Guidance. LOE ordnance computations take into considerations shipping losses.

c. These concepts are consistent with the national military strategy of flexible and selective engagement to protect U.S. interests throughout the world and to help meet the security needs of U.S. partners in key regions. This strategy requires a ready U.S. military force capable of responding quickly and decisively to protect U.S. security. The NNOR process addresses the following key issues.

(1) Involves the Combatant Commander's early in the process and ensures operational flexibility in their theater.

(2) Establishes a common estimate of outyear enemy capabilities.

(3) Offers a common architecture to describe munitions requirements.

(4) Recognizes Navy-unique perspectives.

(5) Facilitates readiness and sustainability of a decisive Naval force.

(6) Ensures coordination between Combatant Commander's and PEO/PM different perspective on requirements.

8.2.2.5 NNOR Process.

a. Combat requirements for those weapons included in the NNOR process are computed annually, based upon inputs from the Navy and Marine Corps Headquarters and field staffs.

b. Non-combat requirements are computed by the Non-Combat Expenditure Requirements (NCER) process.

c. OPNAVINST 8011.9 series applies to the computation of combat (i.e. war reserve) requirements for selected Threat and LOE non-nuclear ordnance under the purview of the NNOR process. Only Department of the Navy Threat and LOE ordnance, which the Non-Nuclear Ordnance Planning (NNOP) Board has agreed to include in the NNOR process, are within the scope of this manual. The membership of the NNOP is detailed in the manual.

(1) Threat ordnance is used against a finite enemy target base or enemy targets not easily reconstituted. The combat requirement (program and planning objectives) is based on the percentage of targets that must be destroyed.

(2) LOE ordnance is composed of air-delivered ordnance used against unlimited enemy targets such as personnel, bridges, factories and tanks. LOE ordnance is also composed of ship gun ammunition, countermeasures devices and sonobuoys which are used according to a specified expenditure rate. LOE ordnance currently includes 5-inch ship gun ammunition. The combat requirement is based on either the physical ability to deliver the weapons (number of aircraft sorties) or an expenditure rate (rounds per day).

(3) The NNOR process does not currently compute a combat requirement for small arms ammunition currently excluded from the NNOR ordnance list together with ship gun ammunition under 5-inches. OPNAVINST 3591.1D governs how small arms requirements for training and qualification are developed.

d. Combat requirements. The determinations of quantities of Threat and LOE ordnance is based on the combat requirements, which are defined as the war reserve inventory necessary to achieve the objectives established by Defense Planning Guidance.

e. Annual NNOR update. The purpose of the NNOR process is to establish combat requirements of designated ordnance for use in the POM development. This is accomplished through a family of computer models utilizing an approved database. The key milestones are amplified below:

(1) Database update. The annual NNOR process is initiated with the issuance, for update, of the approved database. Participants submit revised data, for their area of responsibility, under flag, division director, or commanding officer signature.

(2) Issue submission. During the call for the database update, any participant may submit issues relating to any aspect of the update. Issues should reflect an adequate discussion of concerns, together with suggested alternatives and impacts and, whenever possible, a specific recommendation to correct the problem or deficiency identified in the issue paper.

(3) NNOR Working Group. The NNOR Working Group reviews the database update and all proposed issues and formulates a staff program proposal for presentation to the NNOP Board Review Group. All significant issues in the database update cycle are presented to the NNOP Board Review Group.

(4) Database validation and approval. Changes proposed to the database must be consistent with programmatic data and related warfighting data. The NNOP Board Review Group may validate and approve all changes and revise combat requirements proposed during the update cycle. Issues that cannot be resolved by the NNOP Board Review Group will be forwarded to the NNOP Board for final determination. If data are not changed during the update cycle, the current data will be used for model computations.

(5) Model computations and evaluation. After the database is revised, requirements are computed and compared with both the predicted results and previous computation.

(6) Output approval. Revised requirements, computed from the updated database, are subject to the approval of the NNOR Board Review Group. The NNOR Board Review Group may validate and approve NNOP output data.

(7) Unusual circumstances. Under rare conditions the NNOP Board may override model computations.

(8) Requirements documentation. The approved requirements will be promulgated for use in the DON budget cycle development.

f. Addition/Deletion of Ordnance.

(1) The NNOR process encompasses a variety of ordnance. Theoretically, any item of non-nuclear ordnance can be introduced into the NNOR process. Historically, ordnance has been included to focus attention on high unit cost, to ensure maximum readiness and sustainability of its service life and due to DON, Office of the Secretary of Defense (OSD), or Congressional interest. Other critical warfighting factors are considered by the NNOP Board when an issue to add a weapon to the process is deliberated. Proposals to introduce in-service weapons to the NNOR process should be forwarded (as issues) during the database update cycle.

(2) New ordnance may be proposed for inclusion in the NNOR process when it has an approved Operational Requirement (OR) and an Initial Operating Capability (IOC) within the Future Years Defense Plan (FYDP). The addition of a new weapon is initiated by the appropriate resource sponsor during the data update phase. In addition to the above criteria, new ordnance proposals must contain information on platforms, ship-fills, effectiveness and utilization. The NNOR will compute a combat requirement for a new weapon only when the NNOP Board (or the NNOP Board Review Group acting within its charter) approves the new weapon for inclusion in the process.

(3) The list of weapons for which the NNOR process computes a combat requirement will be reviewed and validated annually. A weapon is normally deleted from the NNOR process when it is superceded by a more current weapon. However, an issue to delete a weapon may be initiated at any time during the data update cycle.

8.2.3 Requirements Determination Responsibilities. Requirements development for Navy surface ordnance requires interaction and coordination across the echelons of CNO, Commander Fleet Forces Command (CFFC), other major claimants, and COMNAVSEASYSCOM.

8.2.3.1 CNO.

a. Provides ordnance logistics guidance and policy to CFFC in support of the respective Unified Commander's during the deliberated planning process (N4).

b. Coordinates with CFFC and other major claimants to obtain accurate inputs to the NNOR and ensure Training, Testing and Current Operational Requirements (TTCOR) are submitted.

c. Passes TTCOR inputs to the Naval Supply Systems Command Global Logistics Support (NAVSUP GLS AMMO) and resource sponsors for development of the CNO approved Non-Combat Expenditure Allocation (NCEA) (N70M10).

d. Annually approves and promulgates the NCEA to the CFFC and other major claimants for further distribution to the Naval forces (N411).

e. In the event of crisis, stands-up the Crisis Response Center and publishes the Letter of Instruction.

8.2.3.2 CFFC and Marine Forces (MARFORs).

a. Participate in annual Global Naval Ordnance Positioning Plan (GNOPP) update conferences to:

(1) Coordinate within the GNOPP charter and with NAVSUP GLS AMMO to develop positioning actions to meet OPLAN requirements, minimize risks associated with ordnance shortfalls, and facilitate Time Phased Force and Deployment Data (TPFDD) execution.

(2) Develop, or revise as necessary, business rules for the GNOPP based on precise planning factors including: shipfill, OPLAN and training requirements; storage activities and capacity; and resupply lead times.

(3) Resolve deliberate planning, crisis action planning, positioning plan development, load planning and ordnance positioning strategy issues. If unable to do so, address problem areas to CNO/CMC for resolution.

b. Obtain validated OPLAN ordnance requirements from the respective service components. Coordinate with service components and NAVSUP GLS AMMO regarding ammunition sourcing, identification of shortfalls, and completion of the TPFDD during the deliberate planning process.

c. Conduct periodic assessments of Unified Commanders, and CFFC requirements in support of Major Theater War (MTW), Small Scale Contingencies (SSC) and Military Operations Other Than War (MOOTW).

d. Submit to the Commanding Officer, NAVSUP GLS AMMO:

(1) Space Utilization and Storage of Explosive/Inert Ammunition Report and Magazine Hazard Class Capacity Report to support new production and rework allocations (including NCEA stocks).

(2) Proposed changes to 30,000 series allowance lists for shipfill, mission loads, and cargo loads based on CNO approved combat requirements with a copy to CNO (N815).

(3) Inputs (revisions to business rules/planning factors) for the GNOPP in support of Unified Commander and CFFC OPLANs/Contingency Plans (CONPLANs) and other contingency requirements. Submit copies to NAVSUP GLS AMMO via CNO (N411).

e. Develop tailored allowance lists from which afloat activities will submit requisitions to meet Unified Commander's and CFFC requirements.

f. Submit training requirement component of the TTCOR to CNO (N70M10) by 1 October each year for development of the NCEA.

g. Manage load plans for all storage activities in respective area of responsibilities and coordinate replenishment/redistribution required to correct load plan deficiencies (shortages/excess) with NAVSUP GLS AMMO.

h. Coordinate with NAVSUP GLS AMMO when attempting to satisfy U.S. Marine Corps Naval ammunition shortfalls that cannot be filled from assets held at primary or secondary Naval stock-point within the area of responsibility.

8.2.3.3 Commander, NAVSUP GLS AMMO. https://www.ois.disa.mil

a. Develop, update and manage the GNOPP model utilizing inputs from CFFC. Identify ordnance requiring positioning and publish a 2-year positioning plan. The plan will be updated annually when changes are identified via positioning conference and the GNOPP Memorandum of Agreement (MOA).

b. Compute and publish load plans for all Naval ammunition storage activities.

c. Publish and issue shipfill, mission and cargo load allowance lists.

d. Schedule and coordinate annual GNOPP Update Conferences.

e. Coordinate and assist CFFC and Major Claimants in developing 30,000 series allowance lists.

f. Coordinate development of ordnance distribution plans, based on GNOPP positioning/load plans, with CFFC. Identify ordnance positioned in support of GNOPP by specific mission and priority.

g. Develop metric to measure ordnance distribution compliance relative to the GNOPP allocation and magazine utilization. Incorporate metrics into the NAVSUP GLS AMMO Ordnance Assessment Profile (OAP).

h. Incorporate ordnance inventory readiness metrics into the NAVSUP GLS AMMO OAP based on standardized readiness definitions and assumptions provided by CFFC and coordinated/reviewed by the Naval Ordnance Readiness Improvement Program.

i. Assist CFFC in the management of load plans by coordinating the ordnance replenishment and redistribution.

j. Act as Department of the Navy single point of contact for coordination with the Joint Munitions Transportation Coordinating Agency (JMTCA) for the Single Manager of Conventional Ammunition (SMCA) and non-SMCA common-user ammunition movement requirements other than Class V(W) (USMC) ground ammunition. Provide data required to complete deliberate planning, crisis actions planning used to facilitate United States Transportation Command (USTRANSCOM) feasibility analysis.

k. Coordinate sourcing for SMCA-held assets.

l. Advise CNO (N411) of changes or impending changes in ashore ordnance storage capabilities.

m. Provide new production and rework schedules and allocation summaries to CFFC. Provide copy to CNO (N411).

n. Ensure ordnance automated management systems are kept current with industry technology standards and are able to accommodate changes in a timely manner.

o. When directed, stand up a Crisis Response Center (CRC) to enable timely sourcing, distribution and accurate expenditure reporting of Naval ordnance.

8.2.3.4 Commandant of the Marine Corps.

a. Provide ordnance and policy to MARFORs in support of the respective Unified Commanders and CFFC during the deliberate planning process.

b. Coordinates with MARFORs to obtain accurate input to NNOR and ensure TTCOR are submitted.

c. Pass TTCOR inputs to NAVSUP GLS AMMO for development of the CMC-approved NCEA.

d. Annually approve and promulgate NCEA to the MARFORs.

e. Resolve U.S. Marine Corps material shortfalls identified during the deliberate planning process.

8.2.4 Program Development.

8.2.4.1 Procurement and Maintenance Requirements. The PEOs and PMs translate the Total Munitions Requirements into specific principal item procurement and maintenance requirements for the POM presentation and budget submittal. The programming of these requirements considers many variables. These include asset inventories, expenditures, due-ins, allowances, ship off-loads, SMCA and Navy maintenance capabilities, production data, pricing data, numbers and types of missile launchers/gun barrels not listed in the NNOR, research and development requirements, etc. These variables are analyzed, interpreted, and used to develop a procurement plan. The presentation is formally structured by the PMs to produce documents such as the Material Planning Studies (MPS), Budget Exhibits, and Munitions Procurements and Inventories Studies (MP&IS). Collectively, these documents enable analysis and assessment of current and projected levels of the Total Munitions Requirements asset readiness, help identify assets and deficiencies, provide detailed backup documentation for POM and budget submittals, and present information useful to management and higher level planning and funding authorities. Program execution is constrained by factors such as asset availability, production shortfalls, changes in force levels and priorities, and resource and fiscal limitations. The DPG and supporting NNOR define the total threat, allocate the Navy's share of targets, and compute the level of ordnance required to eliminate these threats. The PEOs and PMs role is to interpret and translate this guidance into specific requirements, develop the POM, formulate the budget, and monitor the allocation of material resources.

8.2.4.2 Budget Exhibit. The Exhibit P-20. (Requirements Study) is prepared in connection with each budget submission to show the program procurement quantities for the fiscal year. Each exhibit is organized for selected DODICs and displays the following:

a. Assets on hand.

b. Assets due-in from previous fiscal year funds.

c. Projected usage based on NCEA allocation reports and letters.

d. Acquisition objective.

e. Budget fiscal year procurement quantities.

f. Programming objective by element (Shipfill, combat consumption, pipelines, etc.).

g. Historical usage data.

h. Procurement lead time.

The budget exhibit computations also provide input to portions of the MPS and the MP&IS.

8.2.4.3 Munitions Procurement and Inventories Study. The MP&IS (Table IV) is developed to outline the programming objective and extend the coverage contained in the budget exhibit through the POM period (e.g., for POM 06, this would encompass fiscal years 2005-2011). The MP&IS procurement projections display alternative buy programs as well as the current approved FYDP procurement. These alternatives do not represent constraints based on dollars or priorities, but reflect what is required to reach alternative procurement strategies within a given time frame. In addition to its primary use to assist the Resource Sponsors in development of the Sponsor's Proposed Program and the Assessment Sponsors in program assessment, the MP&IS provides major input to the procurement shopping list portion of the POM.

CHAPTER 8.3

Industrial Preparedness Planning

Table of Contents

Paragraph	Subject	Page
8.3.1	Responsibilities Per DODI 5160.68 (NOTAL)	8-3-1
8.3.2	Purpose and Scope	8-3-1
8.3.3	Industrial Preparedness Planning Concepts	8-3-2
8.3.4	SMCA Responsibilities	8-3-3
8.3.5	Section 806	8-3-4
8.3.6	Program Executive Officer for Integrated Warfare Systems (PEO IWS3C), Naval Gunnery Project Office Conventional Ammunition Program Office Responsibilities	8-3-5
8.3.7	Integrating IPP with Current Procurement	8-3-5

CHAPTER 8.3

Industrial Preparedness Planning

8.3.1 Responsibilities Per DODI 5160.68 (NOTAL).

a. The SMCA:

(1) Is responsible to take the lead in development and publication of an overarching conventional ammunition industrial base strategic plan that supports the Military Services' conventional ammunition requirements.

(2) Will manage and invest in a production base that supports SMCA-assigned conventional ammunition and components to:

(a) Ensure an adequate production base to meet the Military Services' conventional ammunition requirements.

(b) Identify and incorporate new and more efficient production technologies.

(c) Conduct industrial preparedness planning and biennially report production base information and results to the Military Services.

(d) Coordinate with the Military Services on the status of the production base as significant changes are planned or occur.

(e) Maintain an industry advisory panel in accordance with the Federal Advisory Committee Act, consisting of conventional ammunition producers and the Military Services.

(f) Serve as the technical advisor to the Joint Material Priorities and Allocation Board on matters related to assigned conventional ammunition.

b. The Military Services will:

(1) Retain responsibility for determination of FYDP conventional ammunition requirements, and ensure such requirements are conveyed to the SMCA. The requirements should include, non-SMCA-managed items using the same industrial capabilities as SMCA items.

(2) Provide necessary industrial preparedness planning information to the SMCA relative to facilities retained by the Military Services for ensuring that the SMCA has adequate data upon seeking the best balance and assisting in the conduct of industrial preparedness planning and developing an overarching industrial base strategic plan.

(3) Use facilities within the SMCA production base when they meet the Military Services' requirements.

(4) Provide support in development of the overarching conventional ammunition industrial base strategic plan.

8.3.2 Purpose and Scope. DOD 5160.65-M contains joint policies and procedures for the SMCA Industrial Preparedness Planning (IPP) program in detail. The purpose of the joint policies and procedures is to provide the principles of IPP and the aggregation of replenishment requirements for ammunition. Industrial preparedness planning and aggregation of the replen-

ishment production needs of all DOD Components for ammunition assigned to the SMCA shall be integrated with the overall acquisition strategy of ammunition programs. The SECDEF outlines the goals and objectives of the industrial preparedness program through material support planning guidance and other related DOD policy guidance. From the Navy surface ammunition perspective, IPP is a product of the requirements determination process which is provided to the SMCA, not part of the requirements determination process itself. Since the majority of surface ammunition items are acquired by the SMCA, only the SMCA IPP process will be discussed.

8.3.3 Industrial Preparedness Planning Concepts.

a. The SMCA Industrial Preparedness Planning (IPP) planners need enough information from the Services to accomplish meaningful planning of the industrial base to support replenishment. To fill this need, the Services shall provide valid near-year information and realistic out-year projections to the SMCA. This information will be used to determine the production capacity required to establish and maintain the production base, or dispose of capacity no longer required.

b. Industrial preparedness planning shall be limited to military end items or components essential to operational effectiveness under combat or combat training conditions, or for the safety and survival of personnel; and meet at least one of the following criteria:

(1) Requires a long lead-time.

(2) Requires development of, or additional, capacity to meet replenishment production needs.

(3) Requires continuous surveillance to ensure preservation of an adequate base to support replenishment production needs.

(4) Requires critical skills and/or specialized, unique and/or critical production equipment or facilities.

c. Items shall not be selected for planning if they:

(1) Are solely for comfort, convenience, or morale.

(2) Will become obsolete within 12 months.

(3) Can normally be acquired from commercial sources in enough quantities in sufficient time for MTW replenishment requirements.

d. The following assumptions will be used for planning the industrial base to support replenishment:

(1) Replenishment will be done in peacetime conditions. Replenishment will be in addition to the ongoing FYDP production. Environmental and safety restraints will be in effect.

(2) The existing provisions of the Defense Production Act (SOAppUSC Section 2077) will be strictly enforced and used to direct increased output of current production and to resolve/alleviate material conflicts between civilian and military production through use of the Defense Priorities and Allocation System (DPAS) Regulation.

(3) Distribution from the strategic stockpile will be available based upon sufficient justification and DOD and Federal priorities.

(4) Production equipment, identified and available in the unassigned DOD industrial reserve, will be provided to the requiring activity for installation based on priority of need.

(5) The U.S. industrial base is undamaged.

(6) Foreign producers (other than Canadian) will not be considered as a source of supply.

(7) Usable Foreign Military Sales (FMS) items under U.S. control will be diverted to U.S. forces.

e. If the SMCA determines that an item does not require formal detail planning due to asset posture, insignificant quantities or commercial availability, the requiring Service will be advised prior to finalization of planning.

f. The Services and the SMCA shall plan for transitioning of items according to chapter 2 and subsection A.5. of DOD 5160.65-M.

g. Special actions may be needed to qualify or preserve the industrial base for items from foreign sources. In cases where dependency on foreign sources exist, the SMCA and the Services shall take alternative industrial preparedness measures as appropriate, including the qualifying of standby domestic production capability.

h. The true production capability of planned producers must be ascertained by the SMCA. To do so, SMCA review teams will make periodic on-site reviews of selected industrial base activities.

(1) A schedule of visits to planned producers shall be prepared and provided annually by the industrial preparedness activities of the SMCA. Changes and results from the survey are then used to update the SMCA Production Base Plan (PBP) database and subsequently support the Armament Systems Automated Production Plan (ASAPP).

(2) The SMCA review team coordinates the on-site review with the Industrial Analysis Support (IAS) Manager. The IAS Manager is the DOD designee, within the Defense Logistics Agency (DLA), responsible for performing IPP in plants under his or her cognizance. The IOC Deputy Chief of Staff (DCS) for Industrial Readiness serves as the IAS Manager for the organic ammunition production base. (This includes the Government-Owned, Contractor-Operated (GOCO) and Government-Owned, Government-Operated (GOGO) plants.)

(3) The IAS Manager becomes a member of the team and, as such, should advise the team leader of any shortfalls experienced by the contractors prior to the inspections of their plants.

(4) After review and evaluation, the SMCA review team shall determine the reliability of the overall planned producers' production capability.

(5) In case of capacity differences or shortages to meet total service requirements, the findings shall be reviewed by the SMCA IPP activity for resolution and corrective action.

(6) The SMCA shall provide the highest caliber of industrial expertise consisting of design, production, and scheduling experience.

8.3.4 SMCA Responsibilities. The SMCA shall perform the following functions:

a. Aggregate DOD component replenishment requirements as described in DOD 5160.65-M.

b. Establish and maintain production capability under current DOD Instructions to supplement private capacity enough to support demand rates. Justify exceptions on a case-by-case basis.

c. Fund for base retention costs, including layaway and maintenance. Relate these costs to the levels of readiness needed for replenishment.

d. Ensure that all SMCA replenishment requirements are planned against the production base. Before making major changes in requirements or production base capability, promptly notify the concerned service(s).

e. Ensure full munitions support for the Military Services and selected allied forces to support replenishment by:

(1) Establishing and maintaining a conventional ammunition production base that meets assigned peacetime and replenishment needs.

(2) Establishing and maintaining enough storage and handling capability to meet assigned replenishment requirements.

f. Improve planning with contractors, including separate funding and planning to the second and third tiers when necessary. Develop industrial preparedness plans for replenishment by one of several methods:

(1) Using the DD Form 2575, "DOD Industrial Preparedness Program Production Planning Schedule," (or approved replacement form) under which the contractor takes part voluntarily.

(2) Using contract clauses or similar methods. These methods may be used when funding is available.

g. Retain conventional ammunition capacity in the highest possible state of readiness commensurate with DOD policy and the economic tradeoff between maintenance and item inventory.

h. When appropriate, recommend that peacetime contracts be negotiated with planned producers for acquisition of planned items under Federal Acquisition Regulation (FAR) Section 6.302-3 to encourage more active and effective industry participation in IPP.

i. Provide data back to the Military Services concerning the status of IPP for SMCA items by means of the SMCA PBP and other reports. Such data and reports shall be based on an all-up-round analysis.

8.3.5 Section 806.

a. Section 806 of the Strom Thrumond National Defense Authorization Act for Fiscal Year 1999 states that the official designated as the SMCA in the Department of Defense shall limit a specific procurement of ammunition to sources within the national technology and industrial base in accordance with section 2304(c)(3) of Title 10, United States Code (U.S.C.), if that manager determines that such limitation is necessary to maintain a facility, producer, manufacturer, or other supplier available for furnishing an essential item of ammunition or ammunition component in cases of national emergency or to achieve industrial mobilization. Section 806 specifies that the term conventional ammunition has the meaning given that term in DODD 5160.65.

(1) The SMCA, U.S. Army, Program Executive Officer for Ammunition (PEO-Ammo), is responsible for annually publishing the "Conventional Ammunition End Item/Component at Risk List". This list will identify ammunition or components that potentially qualify for restricted competition. DOD 5000.60-H, Assessing Defense Industrial Capabilities, provides guidance in preparing the list.

(2) The SMCA PEO-Ammo will review all acquisition plans and strategies that include "Conventional Ammunition" prior to approval. The purpose of the review is to determine if the

planned approach to competition is consistent with retaining the national technology and industrial base capabilities required for national security, considering all risk factors.

(3) If the SMCA agrees with the competitive approach, that official signs the "Section 806 Determination."

(4) If the SMCA disagrees with the competitive approach, the program manager and the DCS for Ammo will need to work together to resolve the differences.

b. The Defense Federal Acquisition Regulations Supplement (DFARS) SubPart 207.1, Acquisition Plans, contains guidance regarding acquisition plans and their review by the SMCA. See: http://www.acq.osd.mil/dpap/dfars/html/current/207_1.htm

8.3.6 Program Executive Officer for Integrated Warfare Systems (PEO IWS3C), Naval Gunnery Project Office Conventional Ammunition Program Office Responsibilities. As the Navy's surface ammunition representative in the IPP process, the PM will perform the following.

a. Provide replenishment requirements to the SMCA based on force structure, weapons systems, and common scenario latest defense planning guidance.

(1) Replenishment requirements. Focuses on replacing losses of the most demanding of two nearly simultaneous MTWs.

(2) Asset Posture. This information is requested to allow the SMCA to determine base retention and sizing requirements.

(3) Critical Items Watch List (CIL). A CIL of replenishment items.

(4) Other Contingencies. Requirements for other contingencies as they become known.

b. Coordinate with the SMCA to ensure that adequate Ammunition Data Lists (ADLs)/Technical Data Packages (TDPs) are available for IPP.

c. Use Navy procedures for item selection and requirements determination.

d. Coordinate with SMCA IPP planners to ensure that production base planning is accomplished early in the life cycle of items still in R&D and not yet transitioned.

e. Provide Service requirements for common components of threat-oriented and other non-SMCA items so they can be reviewed jointly with other replenishment needs.

f. Will develop written acquisition plans and strategies for their commodities, to at least the ammunition family/caliber level. The acquisition plan must be submitted to the SMCA for a Section 806 review and approval, prior to issuance of a solicitation. This requirement is applicable for all new purchases of conventional ammunition including new procurements of conventional ammunition covered by previously approved acquisition plans.

8.3.7 Integrating IPP with Current Procurement. To ensure maximum coordination between the planning process and current procurement plans, integration must take place early in the procurement plans. Planners shall make optimum use of the FARs and DOD directives to keep the production base in a high state of readiness while meeting planning requirements and

objectives. The Data Item Description (DID) is a contractual document that may be included in solicitations and contracts for selected systems and items designated for the IPP. The acquisition activity may conduct IPP by direct discussion with a selected prime contractor. The appropriate IAS Manager will be notified of the "direct planning" choice and be invited to participate. In certain instances, the acquisition activity may award a special study contract to a contractor to accomplish planning. IAS Managers will be kept informed of all special studies that may affect their function. Whichever of these planning alternatives is used by the acquisition activity, close coordination must be accomplished between the Industrial Preparedness planner, the procurement planner, and the IAS Manager.

CHAPTER 8.4

Non-Combat Expenditure Program

Table of Contents

Paragraph	Subject	Page
8.4.1	Non-Combat Expenditure Requirements	8-4-1
8.4.2	Non-Combat Expenditure Allocation	8-4-1
8.4.3	Testing, Training and Current Operational Requirements/NCEA Processes	8-4-2
8.4.4	TTCOR/NCEA Control	8-4-3

CHAPTER 8.4

Non-Combat Expenditure Program

8.4.1 Non-Combat Expenditure Requirements.

8.4.1.1 General. Non-Combat expenditure is the term for all expenditures of ordnance other than for use in combat operations. TTCOR serves as the baseline for the development of NCEA. NCEA supports the following:

a. Training/Exercises - afloat and ashore to maintain a proficiency level of readiness for combat.

b. Test expenditures, including RDT&E for out of production ordnance items, ordnance evaluation and structural firings.

c. Current Operational Requirements (COR) is defined as the quantity of munitions encompassing peace-time operational requirements and supports the following:

(1) Natural disasters.

(2) Riot control.

(3) Saluting rounds.

(4) Explosive ordnance disposal.

(5) Operations other than war.

(6) Competitive marksmanship training and competitions.

(7) Force Protection and physical security.

(8) Requirements for small scale contingencies are not to be COR.

8.4.1.2 Projection Source. Generally, requirements for a and b are predictable and can be projected for the upcoming fiscal year and 9 out-years. For the other expenditures, prior year actual expenditure data should be analyzed to provide the basis for projecting out-year requirements.

8.4.1.3 TTCOR Major Claimants. Activity requirements are submitted via the chain of command by 1 October. Those requirements are consolidated by major claimants for submission to the CNO (due on 1 January annually for the upcoming fiscal year and 2 out-years). The major claimants are listed in the current NAVSUP P-724, Appendix A along with their authorized sub-claimants.

8.4.2 Non-Combat Expenditure Allocation.

8.4.2.1 NAVSUP GLS AMMO develops a proposed NCEA based on an assessment of the TTCOR, the NNOR, past expenditures, current inventory posture, projected deliveries, tracks

requirements and acquisition/program managers inputs. The proposed allocations are submitted to CNO (N7) resource sponsors for concurrence/revision.

a. NAVSUP GLS AMMO consolidates and distributes the proposed NCEA to major claimants for review prior to the annual NCEA conference. The NCEA conference is the forum for major claimants and CNO (N7) resource sponsors to have the opportunity to discuss current issues, concerns and readiness impacts of the proposed allocations. Revisions to the proposed allocations can only be authorized by the CNO (N7) resource sponsors.

b. The annual NCEA forum results in finalization of the next year initial allocations which NAVSUP GLS AMMO forwards, with the promulgation letter, to the NCEA policy sponsor CNO (N411) for approval.

c. Major claimants are notified by NAVSUP GLS AMMO when the approved NCEA has been loaded into the Ordnance Information System-Wholesale (OIS-W) for their subsequent sub-allocations by Naval message. The NCEA is effective 1 October annually.

8.4.2.2 Sub-Allocation. Upon receipt of their annual total NCEA, major claimants sub-allocate ordnance to their authorized subordinate commands and activities to meet their submitted requirements. Major claimants establish and maintain sub-allocations in OIS-W. OIS-W registration provides a means for verifying NCEA requisitions and monitoring over-expenditures versus allocations. Only major claimants and Type Commanders (TYCOMs) are authorized to make sub-allocations to their subclaimants.

8.4.3 Testing, Training and Current Operational Requirements/NCEA Processes.

8.4.3.1 NCEA Augment Procedures:

a. All augment requests originated from subordinate commands shall be submitted via the chain of command to the major claimant. Prior to submitting an augment request to the next higher headquarters in the chain of command, every effort should be made to reallocate assets from within at each command level. If reallocation is not possible, and the augment request reaches the major claimant, the major claimant shall first attempt to reallocate from within. If sufficient assets are not available, the major claimant should coordinate with other major claimants for possible reallocation. If this option is not feasible either, the major claimant may submit an augment request to NAVSUP GLS AMMO.

b. When new requirements or additional justification on original requirements are identified, major claimants can submit augment/decrement requests to NAVSUP GLS AMMO. See NAVSUP P-724 for guidance in submitting.

c. NAVSUP GLS AMMO assesses the inventory posture to determine asset availability for augment approval and obtains CNO (N7) resource sponsor concurrence. NAVSUP GLS AMMO processes augments to the NCEA and updates OIS-W with changes.

d. Major claimants conduct an annual mid-year review by 15 May of year-to-date NCEA expenditures and anticipated expenditures for the balance of the fiscal year. This review will assess NCEA posture and form the basis for augment/excess turn-in requests.

8.4.3.2 Sub-Allocation Process. Commands under TYCOM level, on a case-by-case basis, may obtain authorization for sub-allocation to their sub-claimants via the TYCOM and major clai-

mants. Under major claimant approval, the duly appointed command must notify NAVSUP GLS AMMO, for further instruction on becoming an authorized sub-allocator in OIS-W.

8.4.3.3 User Activity Processing. Once the user activities receive their allocation letter, they prepare their TTCOR submission in accordance with CNO NNOR, and training and readiness requirements listed in applicable instructions. The resulting TTCOR submissions are submitted back up the TTCOR chain of command, being consolidated at each level, reaching NAVSUP GLS AMMO, by the 1 October deadline.

8.4.3.4 Requisition Submittals. Once each level down to the end user has entered their sub-allocation into OIS-W, the using activities can submit requisitions against their NCEA for the current fiscal year. Any requisitions submitted prior to the allocation being registered in OIS-W will be backordered.

8.4.4 TTCOR/NCEA Control.

8.4.4.1 CNO and Major Claimants. It is the responsibility of each major claimant to ensure that all subordinate commands and using activities are aware that noncombat requirement submissions must be timely and contain valid/credible requirements for the ordnance needed during the upcoming year and out-years. Expenditures of allocated quantities are closely monitored by CNO, PMs, and NAVSUP GLS AMMO, not only as a check for over-expenditure, but also for chronic over-estimation of requirements. As each annual submission is prepared, previous out-year projected requirements should be adjusted to reflect real world environments for annual usage. Since unexpended annual allocations are not authorized for carry-over beyond 30 September, justification or rationale for major increases over prior year expenditures should be annotated on requirement submissions.

8.4.4.2 User Registration. End user registration in OIS-W provides a means for verifying NCEA requisitions and monitoring expenditures versus allocation data. To avoid delays in obtaining required ordnance and to enhance justification for future allocations it is essential that:

a. End user NCEA registration in OIS-W be accurate and timely.

b. Changes in allocations and reallocations be registered.

c. End user Unit Identification Codes (UICs) be specified as the second UIC in requisitions requiring For Further Transfer (FFT) via shore activity or Mobile Logistics Support Fleet (MLSF) ship, and in reporting on Ammunition Transaction Reports (ATRs).

CHAPTER 8.5

The Planning, Programming, Budgeting and Execution System

Table of Contents

Paragraph	Subject	Page
8.5.1	General	8-5-1
8.5.2	Planning Phase	8-5-2
8.5.3	Programming Phase	8-5-4
8.5.4	Budgeting Phase	8-5-9
8.5.5	Future Years Defense Plan	8-5-11
8.5.6	Budget Execution	8-5-12
8.5.7	Standard Accounting and Reporting System	8-5-15

List of Illustrations

Figure	Title	Page
8-5-1	The PPBES Process	8-5-3
8-5-2	PPBES Calendar	8-5-8

CHAPTER 8.5

The Planning, Programming, Budgeting and Execution System

8.5.1 General.

8.5.1.1 Purpose. Per DOD 7000.14R the PPBES is a cyclic process containing 3 distinct but interrelated phases: planning, programming, and budgeting. In addition to establishing the framework and process for decision making on future programs, the process permits prior decisions to be examined and analyzed from the viewpoint of the current environment (threat, political, economic, technological, and resources) and for the time period being addressed. The decisions are based on and consistent with a set of objectives, policies, priorities, and strategies derived from National Security Decision Directives. The ultimate objective of the PPBES is to provide the operational commanders the best mix of forces, equipment, and support attainable within fiscal constraints. Throughout the PPBES, the SECDEF provides centralized policy direction while placing program execution authority and responsibilities with the DOD Components. The DOD Components provide advice and information as requested by the Secretary of Defense and his staff so that execution and accountability may be assessed properly. The purpose of the PPBES is to produce a plan, a program, and finally, a budget for the Department of Defense. The budget is forwarded in summary to the President for his approval. The President's budget is then submitted to Congress for authorization and appropriation.

8.5.1.2 Instructions. DODI 7045.7 describes the DOD Planning, Programming, Budgeting System (PPBS) in detail.

8.5.1.3 Cyclical Process. The DOD internal 2-year PPBES process will guide the Department's strategy development, identification of needs for military capabilities, program planning, resource estimation and allocation, acquisition, and other decision processes. The Quadrennial Defense Review (QDR) will continue to serve as the department's major statement of defense strategy and business policy. It also will continue to be the single link throughout DOD that integrates and influences all internal decision processes.

a. The first year of the 2-year cycle will include the Strategic Planning Guidance (SPG), a Joint Programming Guidance (JPG), a Program Objective Memorandum (POM), and a Budget Estimate Submission (BES). Program Decision Memoranda (PDM) will implement POM decisions; Program Budget Decisions (PBDs) will implement BES decisions.

b. The second year of the internal Defense Department 2-year cycle, or the off-year, will include an SPG, if the SECDEF decides an SPG is necessary. If an off-year SPG is issued, it will not introduce major changes to the defense program, except as specifically directed by the Secretary or Deputy SECDEF. Rather than a POM during the off-year, the components will submit Program Change Proposals (PCPs) to accommodate real world changes, and as part of the continuing need to align the defense program with the defense strategy. The components will submit Budget Change Proposals (BCPs) instead of a BES during the off-year. BCPs will accommodate fact-of-life changes resulting from confessional actions. The off-year also includes

execution reviews that will provide the opportunity to make assessments concerning current and previous resource allocations and whether the Department achieved its planned performance goals. Performance metrics will be the analytical underpinning to ascertain whether an appropriate allocation of resources exits in current budgets.

8.5.1.4 Publication. Timely publication of the PPBS documents is critical since they represent a coordinated effort among many participants within the Services. To achieve timeliness, the Defense Resources Board (DRB) annually develops and issues a schedule of significant events for the upcoming calendar year. The DRB schedule specifies the time for the following:

a. Submission by the JCS of a recommended national military policy and related military advice.

b. Submission and review of the POM.

c. Issuance of the DPG.

d. Submission by the JCS of the Joint Program Assessment Memorandum (JPAM).

e. Development and processing of Issue Books (IBs).

f. Issuance of the SECDEF PDMs.

g. Budget estimates.

h. PBDs.

i. Management Initiative Decision (MID).

8.5.1.5 PPBS Process. Figure 8-5-1 illustrates the sequence of the three PPBS phases.

8.5.2 Planning Phase. The planning phase of the PPBS is primarily an OSD level evolution with inputs from the JCS, the Joint Commands, and the Military Departments. The Defense planning process starts with the Joint Strategic Planning Document (JSPD) which is developed from the Joint Long Range Strategic Appraisal (JLRSA). The OSD staff takes the JSPD and inputs from the Commander's, PACFLT/LANTFLT and Military Departments and develops the Defense Guidance (DG). The JCS strategic planning process is unconstrained by resources, and develops minimum risk force levels. OSD attempts to define a fiscally attainable planning force in the DG.

8.5.2.1 JLRSA. The JLRSA is prepared by the JCS to provide transition from long-range to mid-range strategic planning and to stimulate focus on strategic studies. Additionally the JLRSA influences the development of the JSPD.

8.5.2.2 JSPD. The JSPD is submitted by the JCS to SECDEF. It is the product of inter-Service coordination and contains the military strategic concepts and recommendations of the Military Services for attaining the national security objectives. It includes a summary of the JCS planning force levels required to execute the approved national military strategy with a reasonable assurance of success. It also contains views on the attainability of these forces in consideration of fiscal responsibility, manpower resources, material availability, technology, industrial capacity, and interoperability in joint and cross-Service programs. The JSPD shall also provide an appraisal of the capabilities and risks associated with the programmed force levels. Recommended changes to current force planning and program guidance are included. The JSPD is the basic statement that provides a vehicle for an exchange of views on defense policy among the President, SECDEF, JCS, and the National Security Council.

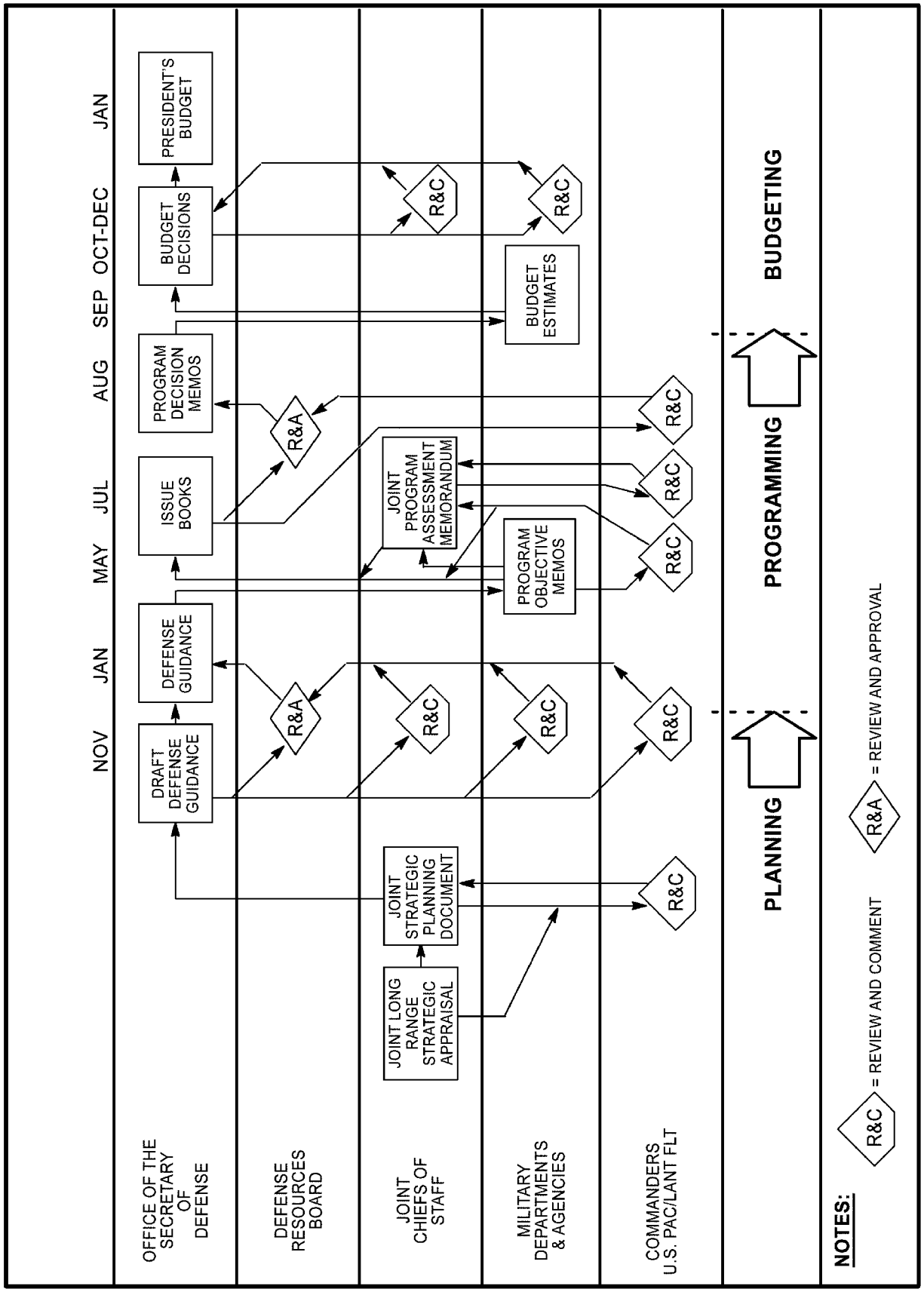

Figure 8-5-1. The PPBES Process

8.5.2.3 DPG. After consideration of the views and recommendations expressed in the JLRSA and JSPD, a draft DPG is issued to solicit comments of all DOD Components, including the Commander's, PACFLT/LANTFLT, on the major issues, problems, and resource constraints in developing and programming forces to execute the policy, strategy, and management direction. The approved version of the DPG is subsequently promulgated and constitutes the authoritative statement directing defense fiscal and planning guidance for development of the POM. The DPG will consist of the following elements:

a. Near and long-term threat assessment and opportunities.

b. Policy and strategy guidance.

c. Force planning guidance.

d. Resource planning guidance.

e. Fiscal guidance.

f. Unresolved issues requiring further study.

8.5.3 Programming Phase. During the PPBS programming phase, DON assesses the status of its programs as they evolved from the previous cycle of PPBS, identifies unresolved issues, and translates the DPG into achievable packages recognizing fiscal and resource constraints. The product of the DON programming process is the DON POM. The POM is a comprehensive and detailed expression of the total requirements affordable within fiscal constraints associated with the mission and commitments of the DON. The POM is presented as changes to the President's Budget to update the OSD FYDP database.

8.5.3.1 Integrated Warfare Architectures (IWARS):

a. Background: The IWARS process starts the Navy programming cycle and serves as a road map to identify alternative paths to achieve warfare and support area objectives based on cost versus capability analysis of options. IWARS focuses on capabilities vice systems and provides linkage between the Navy's strategic vision, threat assessment, and guidance for the acquisition community.

b. Description:

(1) The IWARS is a capabilities-based statement of Navy status and needs by functional area base on architectural plans. The architecture is designed to integrate warfare capabilities and resources across specific platforms and support areas. Analysis is intended to provide warfare focus across capability elements (end-to-end), link to other warfighting and support IWARS, and provide synchronization across the IWARS functional areas.

(2) The IWARS process replaced the Investment Balance Review and Joint Mission Area studies of the past. IWARS teams are chaired by OPNAV and composed of representatives from the Secretary of the Navy's Office, Commander's, PACFLT/LANTFLT, CNO, resource sponsors, acquisition community, Naval Warfare Development Command (NWDC), Joint Warfare Capability Assessment (JWCA) teams, and the Marine Corps. The IWARS teams use data from Congressional Guidance, current POM, Studies and Analysis War Games, DON Chief Information Officer (CIO), Threat Assessments, Defense Planning Guidance, Chairman of the Joint Chiefs of Staff Program Recommendation (CPR)/Program Assessment (CPA), and other IWARS Teams. The intent is to look at capabilities 10 to 15 years in the future from a PM and industry perspective.

(3) The goal of the IWARS process is to provide an analytic basis for programmatic decisions. Each IWARS team will identify shortfalls and redundancies, integrate and synchronize issues, and identify cost alternatives and options at system, engagement, and campaign levels. The end product of each IWARS team is a CNO Program Analysis Memorandum (CPAM), which balances programs across capability areas. The CPAM describes the impact on warfare capability, assesses current programs, and recommends trade-offs to link the Navy's strategic vision, threat assessment, and programs to maintain a balance between warfare capability and current FYDP programs within the overall Navy funding limitations. This leads to a summary CPAM, the formal recommendation for programming and fiscal guidance for resource Sponsor Program Proposals (SPPs).

c. The 12 IWARS functional areas are:

(1) Maritime Dominance includes undersea warfare superiority, anti-submarine warfare, mine warfare and surface warfare superiority.

(2) Deterrence includes strategic deterrence, counter weapons of mass destruction forward presence and engagement.

(3) Power Projection includes strike warfare, littoral/expeditionary warfare, and Naval fire support and USMC ship-to-objective maneuver.

(4) Air Dominance includes air superiority, theater ballistic missile defense and cruise missile defense.

(5) Information Superiority/Sensors includes command, control, communications, computers, intelligence, surveillance, and reconnaissance. Also includes information processing exploitation and dissemination and information warfare/information management.

(6) Sustainment includes Combat Logistics Force (CLF), Military Sealift Command (MSC), and SWT.

(7) Infrastructure includes base operations support, force protection, Military Construction (MILCON), environment, base realignment and closure and administrative support.

(8) Manpower and Personnel includes military pay, Navy, quality of life, recruiting, manpower support and health affairs.

(9) Readiness includes operations tempo, maintenance, spares, operational & training support.

(10) Training and Education includes individual training, ranges and targets, and Naval Post Graduate school.

(11) Technology includes research, development, test, and evaluation.

(12) Force Structure includes ship procurement Navy, aircraft procurement Navy and associated RDT&E.

8.5.3.2 OPNAVINST 3050.23 explains alignment and responsibility of Navy requirements generation and resource planning, modifying the Department of the Navy's PPBS to focus on capability-driven warfighting requirements to include:

a. Increased emphasis on capabilities required for delivery on a Battle Force vice platform level.

b. Enhanced ability to better communicate a long-term warfighting vision with attendant procurement, force structure, and capability to counter threats and achieve mission success via application of analysis both within and beyond programming FYDPs.

c. Establishing the Battle Force Capability Assessment and Programming Process (BCAPP) (formerly referred to as the ”Mission Capability Packages Process”) as the tool to accomplish the modification and purpose as described.

d. Establishing the need for the development of an affordable long range Naval warfare Integrated Strategic Capability Plan (ISCP) (formerly referred to as the ”ISBP”) and an Integrated Sponsor’s Program Proposal (ISPP) for warfare systems that meet Commander’s PACFLT/LANTFLT requirements.

e. Establishing Capability Sponsors (CS) within the Office of the CNO responsible for developing Mission Capability Packages (MCPs) within designated domains and coordinating these packages with the Resource Sponsors, Commander’s PACFLT/LANTFLT, and acquisition community.

f. Implementation. Programs will be defined in terms of application to mission capabilities and grouped into associated MCPs. MCPs will:

(1) Serve as the primary mechanism used to identify the current baseline of capabilities and to accurately forecast capability evolution based on defined assumption.

(2) Constitute the elements to assist in planning and programming integrated systems capabilities as identified in Joint and Navy strategies.

(3) Fuse validated and approved architectures and interoperability requirements per CJCSI 3170.01 and DOD 5000.2-R and reflect milestones and program decisions.

g. Integration across MCPs will be assessed through the development of an ISCP that will become Navy’s ”warfare investment strategy” for programming operational capabilities.

h. The product of the ISCP and resource sponsor programming, input and analysis will be an ISPP. It will be approved and presented as a consolidated programming proposal that will integrate all warfare areas within a specific Program Review (PR) or POM built with incorporation of guidance issued and balanced within controls.

8.5.3.3 POM. Annually, each service submits to SECDEF a POM or PR that is consistent with the strategy and guidance, both programmatic and fiscal, as stated in the DPG. The POM is associated with the even years and a PR with the odd years. PRs are minor adjustments to the prior POM NNOR database and cover the same fiscal years. Major issues that are required to be resolved during the year of submission must be identified in the POM. The programs presented reflect an analysis of the missions to be achieved, the alternatives to accomplish them, and the required resources. In addition to the budget year, the program period is 4 years beyond the budget year for costs and manpower and 7 years beyond the budget year for forces. The POM represents the recommended changes to the current FYDP and specifies, by program element, the Navy’s force requirements, manpower costs, material recommendations, and the

rationale for the proposed changes to the FYDP base. Backup documents are included with the POM for new procurements. As directed by the annual schedule disseminated by the DRB, the Navy initiates and submits its POM to SECDEF for approval. Generally, the Navy's POM cycle commences 3 years prior to program execution and is successively reviewed and changed during the course of the budget cycle. The POM that was formulated in October of the current even FY covers the planned requirements from the FY thru FY +7 of the FY +2 POM. In October of the following year (odd year), FY +1, the PR cycle begins and it covers the same years as the prior year POM. Components of the Navy's POM and the supporting documents for surface ordnance are initiated by the PEOs, DRPMs, and Logistics Commands and submitted to COMNAVSEASYSCOM for review, consolidation, and forwarding through the review process. Figure 8-5-2 illustrates the multiple budget databases that are maintained during a calendar year.

8.5.3.4 Integrated Readiness Capability Assessment (IRCA). Ordnance logistics is within current readiness, one of the CNOs Top Five Priorities to increase the operational availability of our forces. That requires OPNAV N411 to determine, accurately articulate, and validate Navy ordnance readiness requirements to optimize operational ordnance logistics support capabilities and to find the right balance between future and current ordnance readiness.

a. Responsibilities:

(1) NAVSUP GLS AMMO provide baseline inventory data to OPNAV N411.

(2) Naval Air Systems Command and Naval Sea Systems Command (NAVAIR/NAVSEA) Ordnance PMs provide procurement and maintenance funding data and inventory gain/loss data for ach weapon/ordnance item under their cognizance to OPNAV N411.

(3) CFFC will provide to OPNAV N411:

(a) The Fleet Response Plan (FRP) ordnance requirements methodology for Naval ordnance that will be used to determine required FRP inventory levels.

(b) Funding requirements and supporting rationale for Fleet ordnance support.

(4) Naval Ordnance Safety and Security Activity (NOSSA) provides funding requirements and supporting rationale for Explosive Safety Programs.

8.5.3.5 JPAM. The JPAM is submitted by the JCS to SECDEF to facilitate OSD decisions relative to the POM submittal. The JPAM provides a risk assessment based on the composite of the POM force recommendations. It also includes the views of the JCS as to the balance and capabilities of the overall POM force and support levels. In conjunction with the POM, the JPAM provides the basis for issue by the SECDBF of the IBs and PDMs.

8.5.3.6 IB. Based on review of the POM in relation to the JPAM and the DPG, OSD prepares IBs on matters having broad policy, program, or resource implications. These IBs address broad categories and constitute an evaluation of how well the POMs reflect the strategy, and the risks and shortcomings involved. The IBs are reviewed by the Services, the Office of Management and Budget (OMB), and finally, by the DRB. The major issues that are raised during the program review will be measured against the DPG, available budgetary resources, and the management initiatives. These reviews should produce a program that demonstrates a maximum degree of policy implementation consistent with national resource limitations. There are eight IBs with the following titles:

Calendar Year (Odd Year)	Current FY	FY + 1 Budget Year	FY + 2 Budget Year + 1	FY + 3 Budget Year + 2
January	● Current Execution	● Prepare Tentative Technical Operating Budget ▲ Prepare President's Budget	■ Issue paper continuance	
February	● Mid-Year Review Guidance ● Submit Mid-Year Review ● Current Execution	▲ Submit President's Budget ● Apportionment Review Guidance ● Submit Apportionment Review		
March	● NAVSEA Mid-Year Review Questions ● Current Execution	▲ Congressional Hearings	■ PR Update Guidance Submit PR Update	
April	● Current Execution	▲ Congressional Hearings		■ POM Baseline Updates
May	● Current Execution		▶ NAVCOMPT Guidance	
June	● Current Execution		▶ Submit NAVCOMPT Budget	■ POM DBF Review
July	● Current Execution		▶ NAVCOMPT Hearings ▶ NAVCOMPT Mark-up ▶ Submit RECLAMA	
August	● Current Execution		◀ OSD/OMB Guidance	■ Initial POM Review
September	● Balance Spending Authorization/Plan ● Preparation for Funding Closeout ● Current Execution	▲ Congress Submit Approved Appropriation Bills to President for Signature	◀ Submit OSD/OMB Budget	■ OPNAV Program Review Guidance ■ Submit Program Review Briefs
October		● Execute Budget ● Current Execution	◀ Draft PBD/MID ◀ Submit RECLAMA ◀ OSD/OMB Hearing ◀ Final PBD/MID	■ POM Guidance ■ Submit POM ■ NAVSEA POM Review
November		● Current Execution		■ CNO Issue Paper Guidance ■ Submit Issue Papers
December		● Current Execution	▲ Congressional Guidance for President's Budget	■ POM Assessment Guidance ■ Submit POM Assessment

NOTES:
● = Execution
▶ = NAVCOMPT
◀ = OSD/OMB
▲ = Congressional
■ = POM/PR

Figure 8-5-2. PPBES Calendar

a. Book 1: Policy and Risk Assessment Book. Focuses attention on broad DOD-wide policy, strategy and resource allocation issues, and estimates the risk associated with the proposed programs submitted by the DOD components.

b. Book 2: Nuclear Force Book. Focuses on both strategic and theater nuclear force issues.

c. Book 3: Conventional Force Book. Focuses on general purpose force issues.

d. Book 4: Modernization and Investment Book. Focuses on all issues which are predominantly of a modernization and investment nature that are not appropriate to include in the nuclear and conventional force books.

e. Book 5: Readiness and Other Logistics Book. Focuses on readiness and logistics issues.

f. Book 6: Manpower Book. Focuses on manpower related issues.

g. Book 7: Intelligence Book. Focuses on defense elements of the National Foreign Intelligence Program, the Defense Reconnaissance Support Program, and other compartmented tactical intelligence and related activities.

h. Book 8: Management Initiatives Book. Reviews the application in the POMs of the principles enunciated in the acquisition management initiatives, and reviews and summarizes the economies and efficiencies in the submissions.

8.5.3.7 PDM. DRB program review decisions are recorded in a set of PDMs signed by SECDEF and distributed to the services and OMB. The PDMs conclude the programming phase of the PPBS and represent the basis for the budget submissions.

8.5.4 Budgeting Phase. During the budgeting phase of PPBS, DON prepares budget estimates and submits them to OSD for review. DON starts with the first year of the POM FYDP, as modified by the PDM, as a baseline and reviews all aspects of the program in detail. The review is conducted through the Assistant Secretary of the Navy (ASN) Financial Management and Comptroller (FM&C) budget process. The PM is required to submit a program budget to the ASN FM&C through the chain of command in accordance with the current ASN FM&C guidance. This is done to ensure that the program is both executable and properly priced. It also ensures refection of congressional actions, late arriving policy guidance, or other data affecting program composition. The resulting budget estimates are forwarded to OSD/OMB as the DON budget request supported by a large variety of summary and detailed budget exhibits. The estimates include the following budget documents:

a. Exhibit P-1. Procurement Program. A five year summary by budget project/activity will be prepared for each appropriation, showing the amount for each project/activity and total program for each appropriation. The detail of the consolidated line items in this entry should be available upon request. There should be no consolidation into a less than $2 million line item for any line item requiring specific quantity authorization and for any Code B item.

b. Exhibit P-1R. Procurement Program Reserve Components. Provides two sub-line items for each line item listed on the P-1. One is for the National Guard and one is for the Reserve. The total for the Reserve components cannot exceed the amount of funding included in the P-1 line item.

c. Exhibit P-5. Cost Analysis. Provides detailed cost information in support of Exhibit P-1 line items. It is essential that this exhibit be complete and accurate as it is the most important exhibit in the backup book. The budget estimate submission will include P-5 exhibits containing information for all fiscal years from prior years through to complete years for all Acquisition Category 1 (ACAT 1) programs.

d. Exhibit P-5a. Procurement History and Planning. Provides detailed information on the P-5 entries regarding all prior years having contracts with undelivered assets, Current Year (CY), BY1.

e. Exhibit P-20. Requirements Study. Provides detailed information with regard to the determination of asset availability and requirements. A P-20 will be prepared for all items being procured, even if the Item is included in a rolled, aggregated P-1 item, such as ”items less than $2 million”.

f. Exhibit P-21. Production Schedule. Provides detailed information with regard to the monthly production of all applicable items.

g. Exhibit P-32. Procurement Purchases from Defense Working Capital Fund (DWCF). Estimates the amount of new orders planned to be sent to the DWCF business areas.

h. Exhibit P-40. Budget Item Justification. Provides overall narrative justification covering each P-1 item including all advance procurement and spare and repair part P-1 lines.

i. Exhibit P-40a. Budget Item Justification for Aggregated Items. Provides the quantities and funding covering the procurement programs included in rolled P-1 line items.

8.5.4.1 Budget Estimates. With the establishment of program levels in the POM, as modified by PDMs, the budgeting phase begins with the military services developing detailed estimates for the budget year of the approved program. Annually, the Navy submits its budget estimate to SECDEF in accordance with DOD 7000.14-R. The budget estimates include the prior, current, and budget fiscal years. The estimates are prepared and submitted based on the program approved in the PDMs. Modifications may be necessary to remain consistent with changes in national policy.

8.5.4.2 Budget Decisions. After initial review of the budget estimates submitted by the services to OSD, draft PBDs are distributed. The budget estimates and draft PBDs are reviewed jointly by OSD and OMB with participation and input by the services. This review is iterative and decisions are made which include the current year, budget year, and the authorization year (budget year plus one), including an estimate of the resource impact on the three succeeding program years. Budget estimate and change decisions are reflected in final SECDEF approved and published PBDs. PBDs that are approved by the Secretary or Deputy Secretary of Defense are translated into the automated budget review system to reflect changes in the submissions. Periodic summary status reports will be provided by the OSD(C) to the Secretary and Deputy Secretary, the OSD managers and staff, OMB, and the submitting DOD components. Status will be in terms of total obligational authority, budget authority, outlays, and military/civilian end-strengths. After review of the Budget Decisions, DOD components may identify issues that warrant a major issue meeting with the SECDEF. Later decisions made by the Secretary are announced in revisions to issued PBDs.

8.5.4.3 President's Budget. The end result of each PPBS cycle is the President's budget which is sent to Congress along with appropriate OSD justification exhibits for use during the Congressional authorization and appropriation processes.

8.5.5 Future Years Defense Plan.

8.5.5.1 General. The FYDP, DOD 7045.7-H, is the official document which summarizes for each of the services, the force and resource requirements associated with the programs approved by SECDEF in PDMs, program change decisions, and budget decisions. The FYDP is composed of 11 major defense programs. In its first dimension, it is used as a basis for internal DOD program review. In its second dimension, by the input-oriented appropriation structure, it is used by Congress in reviewing budget requests and enacting appropriations. Hence, it serves a purpose of cross-walking the internal review structure with the congressional review structure. This two-dimensional structure and attendant review methodology provides a comprehensive approach to accounting for, estimating, identifying, and allocating resources to individual or logical groups of organizational entities, major combat force or support programs referred to as program elements.

8.5.5.2 FYDP Defense Programs. To make meaningful decisions, provisions for accumulating and controlling information, for planning and programming, and in execution, categories called programs are used. The 11 programs used by the military services are as follows.

a. Program I: Strategic Forces.*

b. Program II: General Purpose Forces.*

c. Program III: Command, Communications, Intelligence and Space.*

d. Program IV: Mobility Forces.*

e. Program V: Guard and Reserve Forces.*

f. Program VI: Research and Development, Test and Evaluation.

g. Program VII: Central Supply and Maintenance.

h. Program VIII: Training, Medical, and Other General Personnel Activities.

i. Program IX: Administration and Associated Activities.

j. Program X: Support of Other Nations.

k. Program XI: Special Operations Forces.

8.5.5.3 Program Elements. Each of the 11 FYDP programs are divided into program elements. All Navy departmental organizations, field activities, and operating forces are assigned to one or more program elements. The account structure of program elements within the FYDP programs is designed to display total costs in two formats:

a. Organizational. Oriented for management use.

b. Mission. Oriented for planning and programming use.

*Combat Forces Programs.

8.5.5.4 FYDP Publication. The FYDP is published three times a year (excluding the historical FYDP which is published following the POM update). It reflects the total resources programmed by DOD by fiscal year. Force structures are presented in the FYDP for the prior fiscal year, current fiscal year, budget year, and the seven succeeding years. Cost and manpower data are shown for the prior fiscal year, current fiscal year, budget year, and the four succeeding years. DOD 7045.7 provides specific guidance and procedures for processing changes or adding new programs to the FYDP.

8.5.5.5 New Approved Program Base. During the budget process, the receipt of PDM, PBD, or SECDEF memoranda reflecting the decisions of SECDEF constitutes a new approved program base when entered into the FYDP by the Navy.

8.5.6 Budget Execution. Budget execution is that phase of the budget process which encompasses all the actions required to accomplish effectively, efficiently, and economically the programs for which funds were requested and approved by competent authority. The budget execution phase overlaps the PPBS budgeting phase and continues throughout the period of availability of the appropriations for obligation or expenditure. Effective budget execution requires procedures for control and evaluation which will ensure compliance with regulations and limitations established by Congress, the General Accounting Office (GAO), the Treasury Department, OMB, and SECDEF, as well as by all echelons of responsibility and command within the DON.

8.5.6.1 Appropriation Enactment. Provisions of the Congressional Budget and Impoundment Control Act of 1974 (P.L. 94-344) require Congress to pass the DOD Appropriations Act by 1 October of each year. In the event the Act has not been passed by this time, Congress provides funding authority through a Continuing Resolution Authority (CRA) making interim appropriations available. The intent of the CRA is to provide funds to maintain operations at a rate necessary for the orderly continuation of activities until regular appropriations are enacted. The CRA language normally provides for the amounts Congress deems necessary to continue operations in support of projects or activities until appropriation bills can be enacted. Based on the CRA and the DON request, the Treasury Department prepares temporary appropriation warrants which, after being counter-signed by the GAO, are forwarded to the DON as certification that the specified amounts are available for commitment, obligation, and expenditure against the direct budget programs.

8.5.6.2 Apportionment. After Congressional enactment of the budget into authorization and appropriation acts, the services are responsible for accountability and execution. Obtaining appropriated funds is the initial step in the budget execution phase. Funds are annually apportioned to the services after review of resource requirements. Apportionment is defined in DOD 7000.14-R as ”A distribution by the OMB of amounts available for obligation in appropriation or fund accounts of the Executive Branch. The distribution makes amounts available on the basis of specified time periods, programs, activities, projects, or combinations thereof. The apportionment system is intended to achieve an effective and orderly use of funds. The amounts so apportioned limit the obligations that may be incurred.”

8.5.6.3 Allocation. An allocation is an authorization by a designated official of a DOD component, which makes funds available to an operating agency. DON allocations are made by the ASN FM&C to the head of the responsible office for the appropriation or, if the Financial

Manager is the responsible office, to the head of the administering office. A sub-allocation is a transfer or delegation to the head of another office, bureau, or command of some portion of the authorization granted to an allocation holder. When the administration of an appropriation is divided, the allocation holder sub-allocates the entire amount of a budget activity, or other subdivision of the appropriation to the head of another office, bureau, or command when that organization has been designated as administering office for the budget activity. The sub-allocation document states that all financial control of jurisdiction of and responsibility for, and amounts allocated are passed to the recipient. Generally, sub-allocation is made to an official who exercises overall administrative responsibility for the execution of the programs funded by the applicable subdivision. The sub-allocation holder issues allotments to the official who exercises immediate supervision of the specified portion of the program. Sub-allocations are used only in the instances of appropriations which are not administered under the Resource Management Systems (RMS) concept of operating budgets.

a. Purpose. Allocations establish responsibility for fund administration and ensure compliance with Congressional intent and OSD constraints in the use of funds for programs below the appropriation level. The amounts allocated, within the program/budget distributions applicable to each appropriation, provide dollar limitations for use in administration, accounting, and control. They are subject to reprogramming limitations established by OSD and the ASD FM.

b. Documentation. The document used to convey authority from the ASN FM&C to the head of the responsible office is the Program/Fund Allocation Form ASN FM&C 2058. These allocations establish availability based on the budget as submitted to Congress and modified by Congressional action on the budget request, by apportionment action of OMB and OSD, and by approved reprogramming actions. Prior to enactment of the annual Appropriations Act, the Form ASN FM&C 2058 establishes the level of programs authorized under the continuing resolution and provides interim funding for DON general fund appropriations. Amounts are established within the authority of the restrictive limitations as stated on the ASN FM&C memorandum appropriations; RDT&E Program/Fund Authorization Form (SD 440); Procurement Program/Fund Approval for Direct Obligation Form (SD 487); and other schedules issued by OSD in the fund authorization process. Upon enactment of the appropriations, amounts established as limitations subject to 31 U.S. Code 1512 through the interim funding procedures are rescinded and replaced by the amounts newly authorized. Distribution of availability within an appropriation is made by budget activity, procurement line item, construction category, program element or other program category as appropriate.

c. Scope. The allocation includes both appropriated funds and anticipated reimbursements, other than those for work and service orders which are subject to automatic apportionment, and therefore, automatically increase the allocation. It specifies the amounts that are available for obligation and the amounts that are not available for obligation. The amounts not available for obligation are categorized by OMB, OSD, and the Office of ASN FM&C. Statutory or other limitations are indicated by footnotes. The amount of reimbursable work or service orders received and accepted is automatically allocated when apportionment is enacted and as a result is not part of the amount allocated on the ASN FM&C Form 2058. However, in the second and subsequent years of availability, the unobligated balance apportioned reflects the unobligated balance of reimbursable work and service orders from the prior year, and becomes a part of the allocated amount. While operating under the authority of a continuing resolution, a reserve

is established in Section IA and II of the ASN FM&C Form 2058 to balance authorized program amounts with financial resources contained in temporary warrants. Obligations and commitments may be incurred by procurement line item or other appropriation subdivision in the program amounts indicated on the ASN FM&C Form 2058, provided that the appropriation level limitations are not exceeded.

d. Preparation and Approval. The ASN FM&C Forms 2058 and 2058-CT are prepared and approved by the Office of Budget and Reports, on behalf of the ASN FM. After approval, they are forwarded to the responsible office for the appropriation for implementation.

e. Constraints. Generally, the ASN FM&C Form 2058 establishes distributions for each program/budget category as applicable and indicates, by footnotes, the quarterly limitations at the overall appropriation level for quarterly apportionments. The recipient is responsible for distributing the quarterly limitations as appropriate below the appropriation level, ensuring that the cumulative total of quarterly limitations does not exceed the quarterly apportionment. The recipient is also responsible for establishing controls to ensure that any further subdivisions of allocated funds, as well as allotments, commitments, obligations, and expenditures, do not exceed the quarterly and annual limitations established by the ASN FM&C Form 2058. Subsidiary constraints are shown as footnotes to the ASN FM&C Form 2058 to reflect statutory and/or administrative requirements. Administration of these constraints is the allocation recipient's responsibility.

8.5.6.4 Allotment. An allotment is an authorization granted within and pursuant to an allocation or sub-allocation for the purpose of incurring commitments, obligations, and expenditures. An allotment may be made to a subordinate of a headquarters component by name or to the Commanding Officer of a shore activity by title. Allotments are used only for appropriations which are not administered under the RMS concept of operating budgets. Sub-allotments may be issued by an allotment holder to transfer responsibility for administration of some portion of the funds to another activity. In such cases, the sub-allotment is in a fixed amount and carries the same responsibility for administrative control as a primary allotment.

a. General. Allotments convey the authority to incur commitments and obligations and to make expenditures from the allocation or sub-allocation holder to an official who is charged with a specific function or mission. The allotment, prepared on the Allotment/Sub-allotment Authorization ASN FM&C Form 372, provides the basis for establishment of the accounts against which obligation and expenditure documents are charged.

b. Limitations. Since an allotment is an administrative subdivision of funds, the total amount is limited by 31 U.S. Code 1512. However, in the case of allotments from appropriations for which OMB has granted automatic apportionment of anticipated reimbursements for work or service orders accepted, such orders provide an automatic increase to the allotment. Although an allottee is issued only one allotment from a given budget activity, the allotment may provide information as to further subdivisions at lower levels with stated degrees of flexibility as to adjustments between those subdivisions.

c. Centrally Managed Allotments. A centrally managed allotment is a specific amount made available by the holder of an allocation or sub-allocation for charges for specified purposes by designated officials, without specific limitations as to any individual official. Such allotments are established subject to the approval of the Comptroller when regular allotments are impracti-

cal. Charges to the centrally managed allotments must be limited to those for the specific functions for which the allotment is designated and must be restricted to transactions which fall within one budget activity. An allocation or sub-allocation holder may establish no more than one centrally managed allotment under a given budget activity. Adequate systems of control must be employed to prevent over obligation or over expenditure. If absolute controls are not available, there must be a system of frequent accounting and reporting that will provide sufficient notice of the need for increasing the allotment or for imposing restrictions.

8.5.6.5 Reprogramming. Reprogramming encompasses changes in the application of financial resources from the purposes originally contemplated and budgeted for. The term ”reprogramming,” however, has been extended to include actions at any level within DOD to reallocate or redistribute resources among program/budget categories. These reprogramming decisions are subject to constraints involving thresholds which establish the level of approval according to the scope of the proposed change. Limitations were imposed on the authority granted to DOD for reprogramming funds, effective with the FY 74 DOD Appropriations Act. Two general provisions of the 1974 and subsequent Appropriations Acts have had an impact on the reprogramming of funds. The first states that ”No part of the funds in this Act shall be available to prepare or present a request to the Committees on Appropriations for the reprogramming of funds, unless for higher priority items, based on unforeseen military requirements, than those for which originally appropriated and in no case where the item for which reprogramming is requested has been denied by the Congress.” Under the general provision covering the transfer authority granted to SECDEF there is also a provision... ”that such authority may not be used unless for higher priority items, based on unforeseen military requirements, than those for which originally appropriated and in no case where the items for which funds are requested has been denied by the Congress...” As an outgrowth of these provisions, DOD modified the formal system governing reprogramming of funds after consultation with the Congressional committees.

8.5.7 Standard Accounting and Reporting System.

8.5.7.1 General. The Standard Accounting and Reporting System (STARS) is used to classify and record financial transactions from the Chart of Accounts through the allocation, distribution, initiation, commitment, and obligation stages. The Commander, Naval Supply Systems Command (COMNAVSUPSYSCOM) has the responsibility for the overall maintenance of the STARS in accordance with the Memorandum of Understanding (MOU) of 1 May 1985. The management of STARS is accomplished by the STARS Steering Committee under the MOU guidelines. The Steering Committee is composed of all principal STARS user Commands.

8.5.7.2 STARS Users. Users are responsible for performing the following:

a. Classifying and recording financial transactions into STARS, including reimbursable transactions, from the Chart of Accounts through the allocation, distribution of funds, commitment, and obligation stages.

b. Controlling and monitoring all input data to the various dictionaries and Chart of Accounts.

c. Monitoring the correction of undistributed disbursements.

8.5.7.3 STARS Teleprocessing System. Certain management and accounting decisions require real time data entry and/or retrieval. The teleprocessing portion of STARS provides the capabili-

ty to meet this demand. System users may perform queries, request special reports, and update planning data over remote terminals. Each transaction is subjected to security and validation checks. If valid, it is processed and a response is output on the user's terminal. If an error is detected during validation or processing, the transaction is immediately canceled and an appropriate error message is written. STARS teleprocessing programs are designed to enhance entry and retrieval of data from the STARS database. To best fulfill management needs, an on-line processing capability is supplied for reports (queries) and planning updates that appear to be most suitable for teleprocessing. These include low-volume, high-frequency reports and those planning updates which do not affect fund availability, but which aid the managers in financial decisions. Accounting documents which establish and reduce fund availability are entered by the user community, and procedures that address these updates are provided in the Fleet Material Support Office Document No. P-104, UM-02. STARS query programs provide real time retrieval of current information. This capability ensures the accuracy of reports and the ability for system users to make decisions with speed and confidence. In most cases, users are able to employ the entire range of queries to extract all types of data. The following are general descriptions of groups of queries to provide an overview of the information available:

a. Status of Funds Queries. The Status of Funds Query Program provides various methods of accessing the Major Claimant, Appropriation, Subhead Requiring/Financial Manager, Branch/Program Manager, Cognizant Manager, Participating Manager, Job Order, Project Directive Line Item (PDLI), Task, PDLI Suffix and Accounts Payable Code Levels of the STARS General Ledger Database. In addition, it allows access to the Document Status Database records related to a given PDLI, or Task and PDLI Suffix, or Accounts Payable Code. These queries provide managers with a rapid response to queries concerning the status of those funds for which they have been assigned responsibility.

b. Gross Obligation Planning Queries. These queries access a Special Planning Segment of the General Ledger Database and provide the user with a comparison of planned versus actual gross obligations for a specific subhead.

c. Document Status Queries. These queries provide current status of a total document or of an individual line of accounting within a document. It can be accessed rapidly with various methods.

d. Transaction History Queries. These queries provide users with the capability of obtaining current month transaction change information subsequent to the last month-end report. Each amount that is output by the History Queries is identified by an Amount Type Code.

e. Reimbursable Queries. These queries give the manager the capability to monitor the entire reimbursable program from orders received to collection. The program provides various outputs summarized by Major Claimant, Appropriation, Subhead, Project Unit/Research/CAN/POM-SLI and Reimbursable Source Code.

f. Trial Balance Queries. These queries provide the users with cumulative general ledger balances for Major Claimant, Appropriation, and Subhead Levels.

g. Dictionary Table and Chart of Accounts Queries. These queries access the Dictionary Table and Chart of Accounts Database and provide the user with formatted responses from the particular database and segments requested.

h. Foreign Military Sales Dictionary Queries. These queries access the FMS segments of the Dictionary Database and provide the user with case management information.

i. Trial Balance Queries. These queries access the right side of the General Ledger Database and provide the user with a trial balance of general ledger accounts at various levels.

j. Payroll/Cost Accounting Dictionary Database Queries. These queries access the STARS Payroll or Cost Accounting Dictionary databases to provide the user with formatted responses illustrating the contents of the selected database.

k. 2199 Transaction Queries. These queries display transactions from the Transaction Database by line item/input type of the entire operating budget.

l. Status of Funds for Budget Activity Queries. Status of Funds Queries access the General Ledger Database and provide the user with the current status of a specified Budget Activity.

m. Billing Queries. These queries access the Invoice/Billing Segments and the Billing/Collections Segments of the Table Database and are intended to aid managers in determining the status of those bills for which they are responsible.

n. Miscellaneous Queries. Queries in this subsection access the various STARS databases. However, they cannot be categorized in one of the subsections above, inasmuch as they are no consistent with the other programs available.

o. Special Request Reports. Various report programs permit the users to request hard copy reports via terminal during regular working hours. All requests are placed on the database and processed at night. The report will be distributed the following morning to the requester.

SECTION 9

Acquisition Management

Table of Contents

Chapter	Subject	Page
9.1	Introduction	9-1-1
9.2	Acquisition Engineering	9-2-1
9.3	Procurement	9-3-1
9.4	Configuration Management	9-4-1
9.5	Product Improvement Program	9-5-1

CHAPTER 9.1

Introduction

Table of Contents

Paragraph	Subject	Page
9.1.1	Scope	9-1-1
9.1.2	Perspective	9-1-1
9.1.3	Organizational Relationships	9-1-1
9.1.4	Secretary of the Navy Support	9-1-1
9.1.5	Acquisition Reform	9-1-1

List of Illustrations

Figure	Title	Page
9-1-1	Acquisition Management Organizational Relationships	9-1-2
9-1-2	Office of the Assistant Secretary of the Navy (Research, Development and Acquisition)	9-1-3

CHAPTER 9.1

Introduction

9.1.1 Scope. DOD 5000 directives describe acquisition policy, process and requirements. No attempt will be made to restate those program or acquisition requirements up to Milestone C in this document. Some references will be made to Research, Development, Test, and Evaluation (RDT&E) to describe relationships, but the emphasis and purpose of this manual is to define life cycle management of an ammunition item after successful passage through acquisition Milestone C.

9.1.2 Perspective. The primary focus of acquisition management is to manage the acquisition of those ammunition items identified in the Congressionally approved program within the funded delivery period. Many acquisition issues are being addressed concurrently with program issues which have significant impact on each other. In the surface ammunition world, the personnel addressing the acquisition issues within the program office are the same personnel addressing the related program issues.

9.1.3 Organizational Relationships. The organizations involved in acquisition management are predominantly spread throughout the Naval Sea Systems Command (NAVSEASYSCOM), Single Manager for Conventional Ammunition (SMCA), and contractor organizational structures. Figure 9-1-1 identifies the organizations involved in the acquisition processes and their relationships to each other. The following sections in this chapter will describe the acquisition processes and identify the organizational responsibilities for those processes.

9.1.4 Secretary of the Navy Support. The Navy's Acquisition Executive, Assistant Secretary of the Navy (Research, Development and Acquisition) (ASN-RDA), http://www.hq.navy.mil/RDA/default.asp, has provided Secretary of the Navy (SECNAV) Instruction 5000.2C, Subj: Implementation and Operation of the Defense Acquisition System and the Joint Capabilities Integration and Development System, to issue mandatory procedures for Department of Navy (DON) implementation of Department of Defense (DOD) acquisition guidance and Chairman of the Joint Chiefs of Staff (JCS) Joint Capabilities Integration and Development System.

a. An organization chart of the Office ASN-RDA is provided as Figure 9-1-2.

b. A comprehensive DON acquisition support website titled "ASN RDA Information System" is available at https://asnrda.hq.navy.mil/. Users must be military or government civilian and request an account for access.

9.1.5 Acquisition Reform. Secretary of Defense (SECDEF) policy memo of 29 June 1994 promulgated principals of specification and standards reform. An Assistant Secretary of the Navy (RD&A) memorandum dated 27 July 1994 implemented the above SECDEF policy memo. The initiatives of acquisition reform that apply to ordnance acquisition include:

a. Performance Based Business Environment. Performance specifications shall be used for the acquisition of all new systems, major modifications, upgrades to current systems, and non-developmental and commercial items, for programs in any acquisition category. Performance or

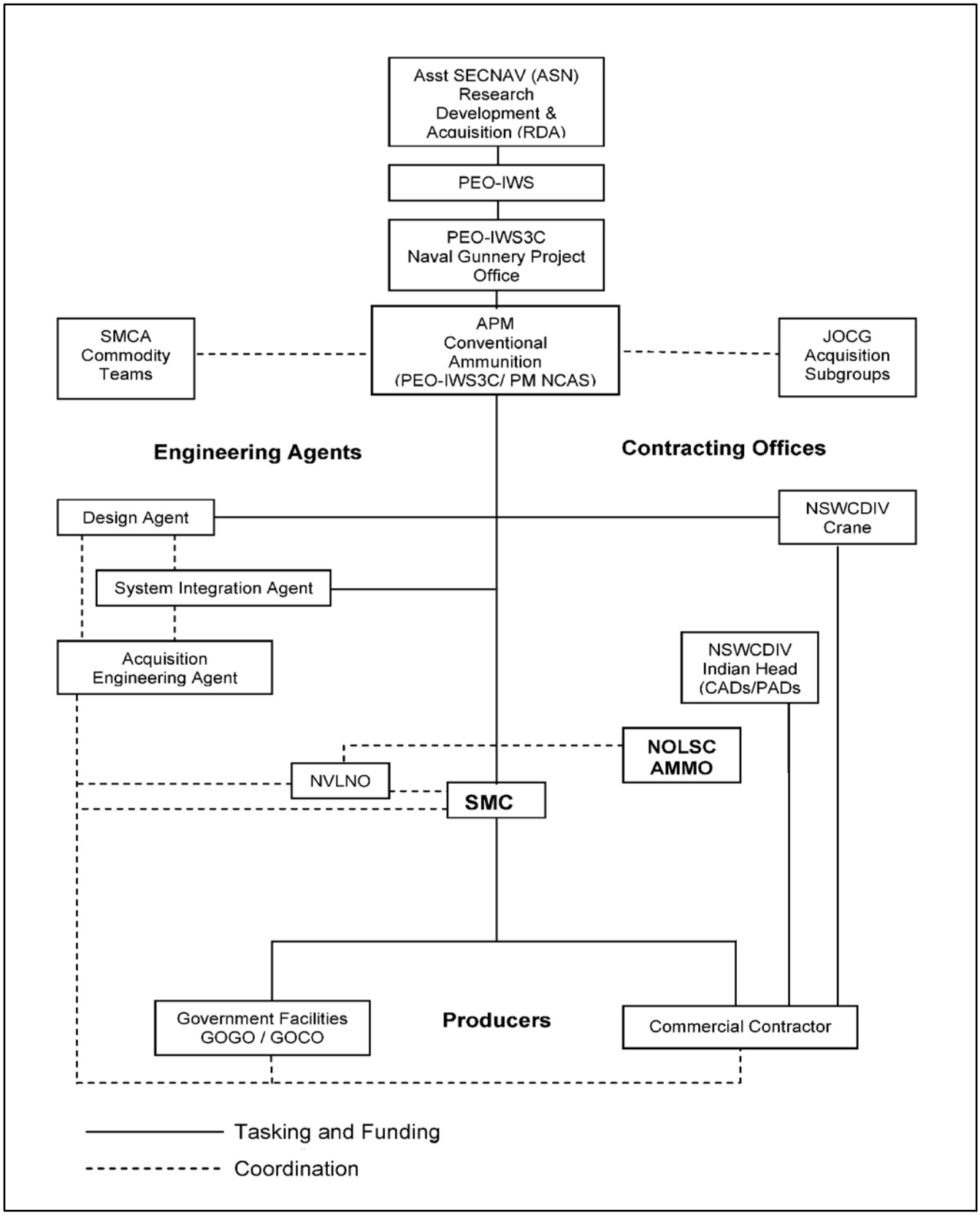

Figure 9-1-1. Acquisition Management Organizational Relationships

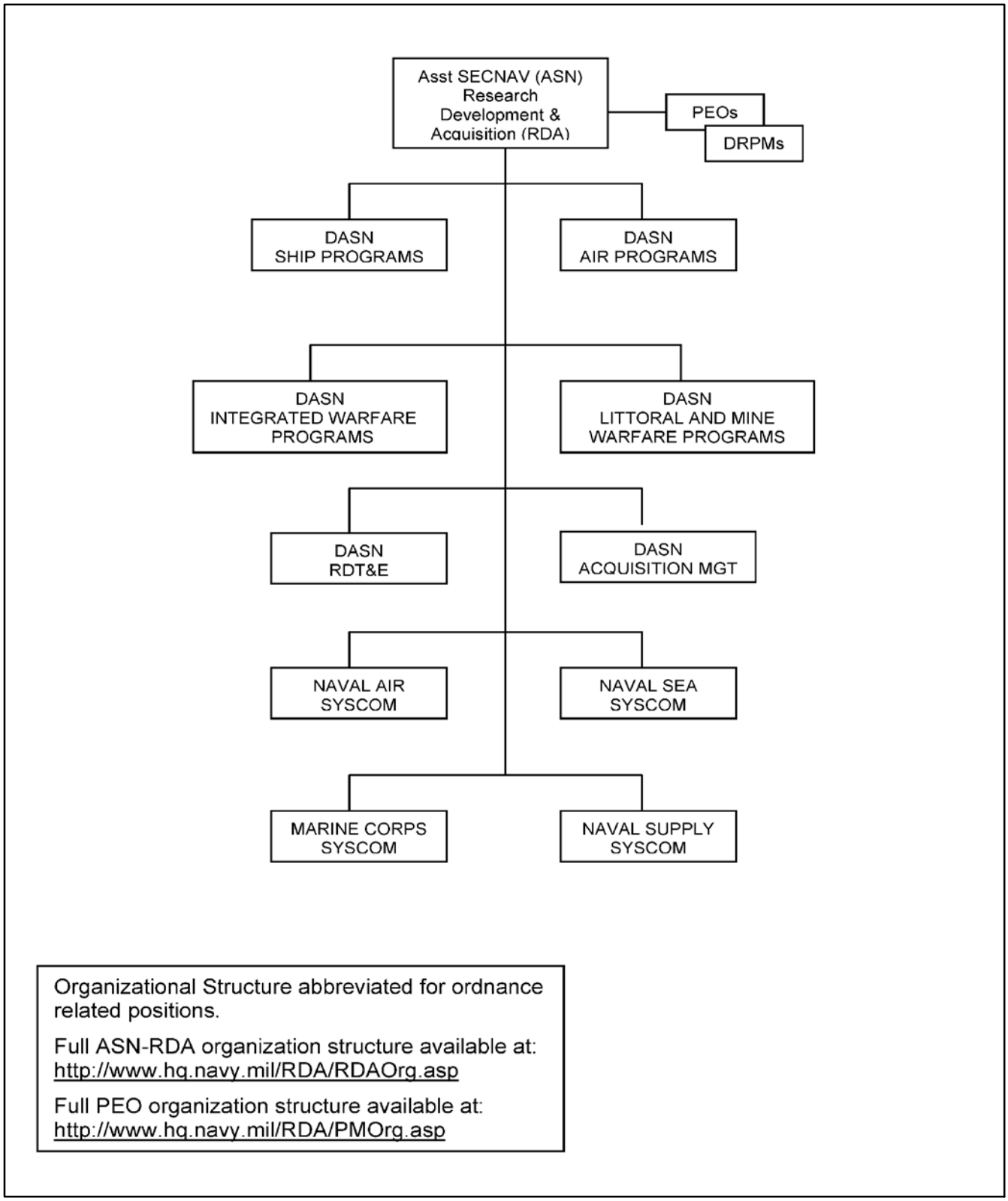

Figure 9-1-2. Office of the Assistant Secretary of the Navy (Research, Development and Acquisition)

performance-based specifications are those specifications that define equipment or systems in terms of observable and measurable operational and support characteristics and interfaces that allow the product to effectively and efficiently perform its mission. In cases where a performance specification is not practical, a non-government standard shall be used (non-government standards are those which are industry standards developed to fulfill other than a military need). The use of military specifications and standards is authorized as a last resort, with an appropriate waiver. Considerable progress has been accomplished in reducing the reliance on military specification and standards since the initiation of acquisition reform.

b. Contracting. All solicitations for $100,000 or greater shall contain language encouraging contractors to submit alternatives to specifications and standards cited in the solicitations. Only those data requirements which are required by law or add value shall be included in a contract. Program Managers (PMs) shall have final responsibility for the data required by the program.

c. Configuration Management. To the extent practical, PMs shall maintain configuration control of functional and performance requirements only, giving contractors responsibility for the detailed design. Configuration requirements shall be prudently tailored to the material item being procured, whether it is developed at government expense or privately developed and offered for government use. Such requirements will be used to control form, fit, and functional characteristics while minimizing design constraints on the contractor.

d. Single Process Initiative. Because it is generally not efficient to operate multiple, government-unique management and manufacturing systems within a given facility, there is an urgent need to shift to facility-wide common systems on existing contracts. The single point of contact for this effort will be the Administrative Contracting Officer (ACO) assigned to a facility. ACOs are directed to encourage contractors to prepare and submit concept papers describing practices that will permit uniform, efficient facility-wide management and manufacturing systems and a method for moving to such systems.

CHAPTER 9.2

Acquisition Engineering

Table of Contents

Paragraph	Subject	Page
9.2.1	Acquisition Engineering	9-2-1
9.2.2	Engineering Responsibilities	9-2-1

CHAPTER 9.2

Acquisition Engineering

9.2.1 Acquisition Engineering

9.2.1.1 General. The origin of an ordnance item begins with adapting a basic research breakthrough to an application that meets a military requirement or by a state-of-the-art development that enhances or fulfills a military requirement. An ordnance subsystem concept is prototyped by the fabrication of test models. If tests are successful, models are refined to achieve maximum effectiveness and are stabilized for pilot plant production. Pilot plant production provides sufficient quantities for Technical Evaluation (TECHEVAL) and Operational Evaluation (OPEVAL) under all possible conditions. Upon completion of such evaluations, and upon demonstration that operational safety and general performance parameters have been met, the configuration is Approved for Limited Production (ALP) or Approved for Full Production (AFP). Follow-on Low Rate Initial Production (LRIP) serves to prove out the production capability. Under certain circumstances, when safety is not a factor and only minor design improvements are necessary, LRIP may be initiated and AFP granted during or upon completion of LRIP. When a military requirement is established for a new ordnance subsystem concept, the Commander, Naval Sea (NAVSEA) assigns functions and responsibilities to managers and agents as described in NAVSEAINST 5400.57. The engineering assignments fall under the following titles.

a. Technical Direction Agent (TDA). A Naval activity responsible for direction and development during the conceptual phase and the advanced development stage.

b. Design Agent (DA). Usually the same activity as the TDA, responsible for the final development of a configuration for prototype, LRIP, and full production.

c. Acquisition Engineering Agent (AEA). A Naval activity responsible for technical and engineering support during development, initial production, and production after AFP.

d. System Integration Agent (SIA). A Naval activity responsible for systems interface compatibility matters.

Since the TDA and DA assignments are usually to the same activity, combined TDA and DA functions and responsibilities are discussed in this section under the inclusive term of DA.

9.2.2 Engineering Responsibilities. Annually the PM assigns engineering responsibilities for specific ammunition items to specific commands in a Tasking Statement. Within the Naval Sea Systems community these Tasking Statements are called SEA TASKS. This Tasking Statement accompanies the annual funding document specifying the authorized use(s) of the funds being provided. Recurring engineering responsibilities are listed under the appropriate title as follows:

9.2.2.1 Design Agent.

a. DAs are responsible for all aspects of development from the conceptual phase to ALP or AFP. During production, DAs assist in production and testing problem areas and participate in

production audits, surveys, and conferences. During the in-service and operational phases, DAs review Fleet performance and ordnance assessment feedback reports to verify reliability, performance, effectiveness, and maintainability of the original design. DA engineering support responsibilities for the basic design continue throughout the life cycle.

b. In addition to having primary responsibility for development of an ordnance item, DAs are responsible for performance of the basic design throughout the remaining life cycle, including effectiveness upon expenditure. Upon receipt of negative findings to the basic design, the DA is responsible for corrective redesign of existing and future configurations of the item.

c. DAs are generally responsible for product improvement or value engineering design changes, either corrective in nature, or as a result of state-of-the-art advancements.

d. U.S. Naval ammunition is designed to be as safe and reliable as possible. Many items contain "fail-safe" or redundant safety features and backup functioning systems. Prior to AFP, extensive tests are conducted at all stages of development and Fleet evaluation. In spite of safety features and extensive testing, ammunition is inherently dangerous and is capable of major malfunctions under certain conditions. Major malfunctions which result in, or have potential for causing, injury to personnel or damage to equipment are a primary concern to all engineering support activities.

e. The DA's objectives are to attain a zero incidence of major malfunctions. Incidents that occur must be investigated and the cause(s) isolated beyond doubt as not attributable to a defective basic design.

f. Specific DA Engineering Responsibilities.

(1) Design ammunition items or components as directed by the PM to take advantage of new technologies or meet new threats assigned to surface ammunition.

(2) Prepare and update Technical Data Packages (TDPs) for the configuration identification of all assigned ordnance items.

(3) Review and make technical recommendations on producer requested deviations.

(4) Review engineering change proposals incident to production or procurement.

(5) Participate in pre-award surveys, post-award conferences, and product oriented surveys.

(6) Participate in production line assessment at the producer's plant.

(7) Develop standard test procedures applicable to first article and acceptance tests.

(8) Participate in analyses and investigations of malfunctions as directed by the PM, and recommend corrective actions.

(9) Develop Product Improvement Programs (PIPs) as directed by the PM to correct design deficiencies or reduce cost for ammunition items contained in the procurement plan.

(10) Develop appropriate disposal procedures for ammunition items under their development and for assigned ammunition items in the inventory whose presently documented disposal procedure is no longer environmentally acceptable.

(11) DAs are expected to update the Item Qualification database with documentation associated with cataloging, final type qualification, insensitive munitions, and other safety/environmental documents.

Access to the Item Qualification database is available thru the Conventional Ordnance Resource Portal (CORP) website at https://ammoeng. crane.navy.mil/MainPage.cfm. The new user registration at http://www.crane.navy.mil/ammoeng/scripts/UsersRegistrationForm.cfm.

g. DA Budgeting and Funding.

(1) Budgeted and funded by the PM for production engineering and for product improvement support. Procurement of Ammunition Navy and Marine Corps (PAN-MC) funds are programmed annually for production engineering for each type subhead scheduled for procurement. Product improvement funds are included only for specific items as appropriate (e.g. 5”/54 ammunition). Upon Congressional budget approval, funds are allocated by the PM to each DA on Work Request (WR) documents.

(2) Budgeted and funded by the PM for malfunction investigations, including the costs of special tests for determination of failure modes. Operations and Maintenance, Navy (O&M,N) funds under the budget line entitled In-Service Engineering Agent (ISEA) Support are budgeted annually based on PM-projected requirements/historical costs. Upon Congressional budget approval, funds are allocated by the PM to each DA on WR documents.

(3) Research and development functions of DAs for ammunition prior to ALP/AFP are budgeted and funded by the PM using RDT&E funds.

9.2.2.2 Acquisition Engineering Agent.

a. Upon AFP, engineering responsibility shifts from the DA to the AEA. AEAs provide configuration control and production engineering support for manufacturing, loading, and assembly.

b. The AEA is the primary engineering activity for ammunition after AFP. General responsibilities include identifying and controlling ammunition item configuration, and maintaining safety and quality during production.

c. Specific AEA Engineering Responsibilities.

(1) Maintain current technical data for the configuration identification of all assigned ammunition items in the Automated Configuration Management Data System (ACMDS) described in Section 9-4.

(2) Act as the focal point for coordinating and negotiating with regard to production engineering, product assurance, and configuration management.

(3) Prepare and issue Automated Data Lists (ADLs) for items requiring procurement.

(4) Review and approve, based on DA concurrence, contractor-requested minor deviations.

(5) Refer major and critical deviations to the PM and maintain a record of all deviations for assigned ammunition.

(6) Develop a TDP priority list for DA preparation, and review TDPs prepared by the DA.

(7) Review and record engineering change proposals incident to production or procurement.

(8) Participate in production line assessment at the producer's plant.

(9) Help develop and coordinate standard test procedures applicable to first article and acceptance tests.

(10) Coordinate the development of the schedule identifying the planned procurement of items for Navy and Foreign Military Sales (FMS) which will require DA design and engineering support in the out-years.

(11) Approve and assign numbers to DA prepared Hazardous Component Safety Data Statements relating to new items.

(12) Provide operations research and statistical analysis services, including requirements determination, to support the PM's acquisition process.

(13) Furnish the Contracting Office with accurate and current data required for the preparation of procurement documents.

(14) Review all procurement technical data from DAs for uniformity, adequacy, completeness, and continuity.

(15) Provide engineering services incident to production, including preproduction design review for producibility, value engineering studies, and technical guidance on pilot production design validation.

(16) Provide Procurement Data Packages (PDPs) to the Contracting Office for component procurement.

(17) Develop the Configuration Identification Procurement Planning Sheets (CIPPS).

(18) Perform configuration audits of items under procurement.

(19) Prepare listings of equipment used during acceptance inspections and review gage designs for accuracy in accordance with internal requirements.

(20) Manage configuration control of new items in the low rate initial production program in order to validate accuracy of technical data prior to full production.

(21) Participate in pre-award surveys, post-award conferences, and product oriented surveys.

(22) Participate with the DAs in analyses and investigations of major malfunctions, and recommend corrective actions to the PM.

(23) Manage and maintain the ordnance gage program.

(24) Ensure that MIL-STD-1168B standards are complied with for ammunition lot numbering and in preparation of ADCs by all activities engaged in future acquisition and maintenance of surface ammunition.

(25) Provide detailed instructions for the correct use of interfix numbers, sizes of ammunition lots, data card content, and distribution to all activities concerned for new procurement and maintenance of surface ammunition.

d. AEA Budgeting and Funding.

(1) Budget and funded by the PM for production engineering. PAN-MC funds are programmed annually for production engineering for each type subhead scheduled for procurement. Upon Congressional budget approval, funds are allocated by the PM to the AEA on WR documents.

(2) Budgeted and funded by the PM for malfunction investigations. O&M,N funds under the budget line entitled Maintenance Support are budgeted annually based on AEA projected requirements. Upon Congressional budget approval, funds are allocated by the PM to the AEA on WR documents.

9.2.2.3 System Integration Agent.

a. The SIA is the primary engineering activity responsible for coordinating the engineering efforts in one area with the other two, to ensure compatibility and interoperability. The three areas are:

(1) Gun ammunition.

(2) Gun systems, including ammunition handling system.

(3) Fire control system.

b. Specific SIA Engineering Responsibilities.

(1) Identify and ensure ballistic compatibility between ammunition sub-assemblies.

(2) Determine interface requirements to provide ballistic compatibility between the ammunition, gun, and fire control systems.

(3) Advise the PMs of interface problems and recommend solutions.

(4) Review all gun ammunition lot acceptance and First Article Tests (FAT) to quantify the contribution of ammunition related errors to total gun weapons system performance.

(5) Review gun ammunition deviations, and engineering change proposals for their impact on ballistic compatibility and system performance.

c. SIA Budgeting and Funding. Budgeted and funded by the PM for production engineering and for product improvement support. PAN-MC funds are programmed annually for production engineering for each type subhead scheduled for procurement. Product improvement funds are included only for specific items as appropriate (e.g. 5”/54 ammunition). Upon Congressional budget approval, funds are allocated by the PM to the SIA on WR documents.

CHAPTER 9.3

Procurement

Table of Contents

Paragraph	Subject	Page
9.3.1	Procurement	9-3-1
9.3.2	Procurement Responsibilities	9-3-1
9.3.3	Full Scale Production/Limited Production	9-3-3
9.3.4	Procurement Plan	9-3-4
9.3.5	Military Inter-Departmental Purchase Requests	9-3-6
9.3.6	Procurement Ammunition Army Appropriation	9-3-7
9.3.7	Contract Award	9-3-7
9.3.8	Procurement Status	9-3-8

CHAPTER 9.3

Procurement

9.3.1 Procurement.

9.3.1.1 General. Procurement is under the management control and policy guidance of the PMs, and is a product of the planning, programming and budgeting cycle, and the requirements determination process.

9.3.1.2 Line Item Requirements. The surface ammunition line item requirements incorporated into the Program Objectives Memorandum (POM)/Program Review (PR) process and into the subsequent phases of the budget evolve from the acquisition objectives mandated by the annual Office of the Secretary of Defense (OSD) and Chief of Naval Operations (CNO) guidance. These requirements are qualified by constraints in funding, production capabilities, altered priorities, or other changes. Also, the computed buy quantities are sometimes spread over a longer period of time than initially planned in order to maintain a "warm production base." They may also be deferred to take advantage of economical buy opportunities through consolidation of procurements. Because of these and other inhibitors, a variance often exists between the acquisition objectives and the objectives resulting from the budget cycle for which funding ultimately is approved and allocated.

9.3.1.3 Programmed Procurement. The programmed procurement is the "buy" quantity of items required to:

a. Introduce new or replacement items.

b. Fill combat material requirements in support of mobilization scenarios in the SECDEF guidance.

c. Secure component support of end item maintenance.

d. Support the Major Claimants' projected peacetime expenditures.

9.3.1.4 Buy Quantity Resolution. During the period from POM initiation through Congressional approval and the final allocation of funds, funding requirements for material support undergo changes before the procurement buy quantity is resolved. The approved and funded procurement quantity represents that portion of the total item requirement which cannot be satisfied from existing assets by maintenance actions or reclamation.

9.3.2 Procurement Responsibilities.

9.3.2.1 Resource Sponsor.

a. Provides resource management, policy, overall monitoring, and direction for the use of funds in procuring ammunition.

b. Provides coordination with other resource sponsors in developing a consolidated budget submittal to best meet the needs of the Fleet.

c. Oversees the development, coordination, and justification of the requirements stated in the POM and budget submittals.

9.3.2.2 Program/Project Manager.

a. Provides program management, policy, overall monitoring, and direction for the procurement of ammunition.

b. Develops, coordinates, and justifies the requirements stated in the POM and budget submittals.

c. Provides peacetime, surge, and mobilization requirements and priorities to the SMCA.

d. Approves and submits to the SMCA, the Navy's Conventional Ammunition Plan (CAP) three times (May, July, December) annually for items, to coincide with the Services and SMCA budget development. Also submits an updated execution year requirements for generation of a one-year execution price list (September). Due to the length of time required for the SMCA to process a CAP submit and return an updated price list the CAP submits are actually used for the following budget. For example, the May CAP submit is about the same time the program office is preparing the Navy Comptroller (NAVCOMPT) services budget. However, the prices used are from the CAP submitted in the previous December because the May CAP prices won't arrive until after the NAVCOMPT budget is due. The May CAP prices are actually used for the Budget Estimate Submission (BES) (also known as the OSD Budget) in the September timeframe. Similarly, the July CAP submit results in prices that will be used for the President's Budget (PRESBUD).

e. Develops a procurement shopping list based on requirements and asset data.

f. Allocates, as appropriate, Procurement of Ammunition Navy and Marine Corps (PAN-MC) funding for procurement and production.

g. Provides funds by Military Interdepartmental Purchase Requests (MIPRs) to support requirements for supply, purchase, production, and first destination transportation of ammunition.

h. Allocates, as appropriate, Operations and Maintenance, Navy (O&M,N) funding and work request orders to accomplish engineering functions incident to procurement.

i. Reviews, and when appropriate, approves contractor requested or recommended deviations which are classified as major or critical.

j. Makes decisions as to procurement of economical buy quantities.

k. Provides guidance to the AEA and DA concerning their engineering responsibilities for production items.

l. Arbitrates and resolves engineering and technical disagreements between the AEA and the cognizant DA.

m. Reviews critical or interfacing Engineering Change Proposals (ECPs) affecting items in production.

n. Initiates LRIP buys for new or improved ammunition prior to full production procurement.

o. Procures some Navy developed items such as specialized small arms ammunition on commercial contracts through Naval Surface Warfare Center (NSWC) Division, Crane or elsewhere within the Navy.

9.3.2.3 Design Agent. DAs are assigned engineering and design responsibilities. This includes development and maintenance of design documentation for new or modified ammunition items (including support equipment) under their respective cognizance's. Specific responsibilities and assignments are in Section 9-2.

9.3.2.4 Acquisition Engineering Agent. The AEA is assigned engineering responsibilities for procurement and production. Specific responsibilities and assignments are in Section 9-2.

9.3.2.5 Systems Integration Agent. The SIA is assigned engineering compatibility responsibilities. Specific responsibilities and assignments are in Section 9-2.

9.3.2.6 Naval Supply Systems Command Global Logistics Support (NAVSUP GLS AMMO), Mechanicsburg, PA.

a. Upon request from the PM provides destinations and Military Standard Requisition and Issue Procedures (MILSTRIPs) for PM MIPRs to the SMCA.

b. Collects, records, and maintains the supply data essential to the procurement process.

c. Tracks and monitors procurement deliveries to inventory in Ordnance Information System-Wholesale (OIS-W) Procurement, Renovation, and Production (PRP) module.

d. Generates MILSTRIP prepositioned material receipt cards to alert consignee activities of shipments due-in from military and contractor production facilities.

9.3.3 Full Scale Production/Limited Production.

9.3.3.1 Transition to the SMCA. Much of the Navy's ordnance is developed by the Navy and procured by the SMCA. Because of the user/SMCA relationship, DODI 5160.68 requires close collaboration between the PM and the SMCA throughout the development stages of an ammunition item. The purpose of such collaboration is to establish the groundwork for the transitioning of the item to SMCA for full scale production after development and completion of TECHEVAL and OPEVAL. Transition Plans are developed in accordance with DOD 5160.65-M. New items, which achieve baseline stability and which can be supported by fully developed technical and configuration documentation, are certified by the Milestone Decision Authority (MDA) as AFP. AFP is provisionally assigned as a means of obtaining an approval for a limited quantity of items when all operational or performance requirements have not yet been achieved. Pending such, these items are not transitioned to the SMCA. In some instances after AFP, the PM may elect for technical reasons, or in consideration of budget constraints, not to enter immediately into full scale production. In such cases the item is procured on a LRIP basis to verify producibility. LRIP can be initiated either prior to or after transition to the single manager, based on PM judgement. When the new item is transferred and SMCA institutes LRIP on behalf of the Navy, close collaboration between the SMCA and Navy is maintained.

9.3.3.2 Other Procurement Sources. Although procurement of the Navy's ammunition needs for items is the responsibility of the SMCA, the PM will arrange for procurement of limited quantities of Navy developed items at Navy activities on occasion. This usually occurs in cases where small quantity procurement by SMCA is not cost-effective. These procurements will be executed by a NSWC Division, Crane or other Navy activity commercial contract as directed by the PM.

9.3.4 Procurement Plan.

9.3.4.1 Conventional Ammunition Plan. The Navy must provide the SMCA their planned requirements for the Future Years Defense Program (FYDP) and their updated execution year requirements for generation of the one-year Execution Price List. This planning information will be submitted by the PM via email to the Joint Munitions Command (JMC). Requirements include prior year, current year budget year 1, budget year 2 and the following four years.

9.3.4.1.1 Timing of CAP Submission. CAP submissions for all fiscal years are provided three times annually. The Navy's requirements information (other than execution requirements) will agree with their budget line submissions to OSD Comptroller (OSD(C)). Since there is a two-year budget cycle or biennial budget, the fiscal years to be entered changes with every other May submission. In order to avoid confusion, for each cycle a call letter will be disseminated to the Services, with guidance showing the cycle name, the fiscal years for which planned requirements are needed and the due date of the Services' requirements. The Navy must also provide an updated execution year requirements in September for development of the one year Execution Price List.

a. The May submission reflects the Services' initial requirements for the next budget year. The prices received from this submit will be applied to the BES (August/September timeframe).

b. The July submission reflects changes to the Services' budget requirements and is the basis for preparation of the PRESBUD in the December/January timeframe which is forwarded to Congress.

c. The September submission. Reflects updated one year requirements for the upcoming execution year. These requirements are the basis for the Execution Price List, which is used in the generation of funded requirements forwarded to the JMC.

d. The December submission. Reflects changes to the Services' budget after OSD review. These changes will be included in the PRESBUD submission in the January/February timeframe. The results of this submission are used as part of the President's Budget Back-up, which is forwarded to Congress.

9.3.4.2 Procurement Planning Meeting. Typically in April each year, prior to the May CAP submittal, the AEA convenes a procurement planning meeting with the SMCA, PM, and NAVSUP GLS AMMO. The purpose of this meeting is to review and analyze each line item projected for procurement, define the technical data required, identify potential problem areas, develop and finalize the CIPPS, and achieve consensus on procurement strategy. In times of declining numbers of procurements, this process has been completed by exchanging and commenting on the CIPPS rather than holding a formal meeting.

9.3.4.3 Funding Risk Assessment. The PM's submittal of the May CAP represents the programmed quantities currently identified in the POM or PR. It reflects the pricing information and other data provided earlier to the PM by the SMCA or obtained during the procurement planning meeting. The May CAP also indicates by item the level of risk associated with the funding proposed for the budget and following two fiscal years. These levels are:

a. Low risk - the item is a requirement for which there is little or no doubt funding will be received.

b. Moderate risk - the item is a requirement for which there is an even chance of receiving funds.

c. High risk - the item is a requirement for which there is doubt that funding will be received.

9.3.4.4 CAP Supplemental Documents. Two important documents are provided to the SMCA to supplement the information in the May CAP: the CIPPS for end item related components, and the PDP. Both the CIPPS and PDP are submitted to the SMCA early in the procurement process to enable timely solicitation, leading to formal award of contract the following fiscal year.

9.3.4.5 SMCA CAP Response. The May submission requires all pricing information and support cost requirements and the CAP from the customer. The August submission requires the CAP from the customer and the call letter. The September submission requires an updated CAP from the customer or direction to use the August submission as a baseline. The December submission requires the CAP from the customer, the call letter and incorporates directed Program Budget Decisions (PBDs) to include inflation indices. The SMCA response includes:

a. Aggregating all Service requirements. A consolidated price list will show levels of risk assigned by the Services, the prices for the current fiscal year, budget year 1 and budget year 2. A price list will be published each cycle. The Price List will also reflect dollars for support cost only requirements.

b. Customer impacts. Provide, in writing as soon as possible, any information that may impact the PM's planned acquisitions or deliveries. Examples of these impacts include: production problems affecting deliveries; product improvement programs that may cause delays; development of a backlog in deliveries that could prevent delivery within the funded delivery period; decisions affecting the production base, such as closing a line or a one time or final buy of components; or any other situation that impacts the customers' delivery dates, funding or budgeting.

c. Budget Support Documents. Develop budget support documents (P-5, P-5a, and P-21) and furnish them to the customer via the Internet Protocol using the Non-classified Internet Protocol Router Network (NIPRNET) (encrypted and password protected address) https://www3.osc.army.mil/sm/icapp or electronically, within 30 days of the date all required information is received. The customer should expect delivery as shown on the P-21 delivery schedule. If this is unsatisfactory, the customer can request a change by separate correspondence.

9.3.4.6 Production Schedule (P-21). This exhibit is produced by the JMC. Primary point of contact is the production manager for the commodity team in the JMC. The P-21 is published on a password protected website. It displays the monthly delivery schedule for all undelivered prior year orders, and current year, budget years and first program year orders. Also shown are procurement lead times and manufacturer's data. Lead times vary from item to item and are based on the developing contractor, engineering, like item procurement, history and expected date of funding (normally 1 October of the fiscal year). The delivery order schedule is normally based on the component having the longest procurement lead time. This item is called the pacing component. The manufacturer's data includes the name, location and production rates for current and planned manufactures.

9.3.4.7 Procurement History and Planning (P-5a). Input for this exhibit is provided by the production manager and completed by the pricing analysts in the commodity teams. It is

checked and published on a password protected website by the Operations and Assessment Team of the JMC. The Procurement History and Planning breakout is modeled after the Four Year Ammunition Cost Analysis and requires the prior year (or last actual procurement year), current year, biennial budget year 1 and biennial budget year 2 data. The prior year can differ between the Ammunition Cost Analysis and the Procurement History and Planning. If there is no requirement for the prior year on the Ammunition Cost Analysis, that column will be blank. If the column is blank, the prior year on the Procurement History and Planning may reflect a previous year's program information not to exceed three years prior.

9.3.4.8 Cost Analysis (P-5). This exhibit displays the program cost breakdown and is submitted to the Services. It is also published on the same password protected website as the P-21 and P-5a. It consists of a local use cost analysis worksheet and a four-year cost analysis. The local use worksheet provides a cost analysis for all elements of the end item for the eight-year period shown in blocks a-h of the CAP form. The cost categories on the ammunition Cost Analysis exhibit represent a number of elements that must be tailored to adequately depict the ammunition item. The categories include hardware, production support, and nonrecurring costs. From the worksheet, a four-year ammunition cost analysis is produced and sent to the customer. The four-year cost analysis provides all element costs of the end item for prior year, current year, budget year 1, and budget year 2 as shown in blocks a-d of the CAP form.

9.3.4.9 Integrated Conventional Ammunition Procurement Plan (ICAPP). The ICAPP displays all the Services' current and planned buys through the FYDP along with information on the status of undelivered orders, production rates and planned mode of acquisition. The ICAPP database will include information about all conventional ammunition assigned to the SMCA by Department of Defense Directive (DODD) 5160.65 (including non-transitioned items) which is procured by the Army. The services and the OSD budget analyst use this information in their resource planning and allocation processes. A complete ICAPP, based on the PRESBUD, is published via compact disk (CD-ROM), in February/March and is used to begin the next planning cycle, which reflects the PRESBUD. This analysis is used to begin the next planning cycle. Updated ammunition requirements summaries (partial interim ICAPPs) are provided for the POM (Service Budgets) and the BES submissions, also on CD-ROMs. An ICAPP, based on the PRESBUD, which includes budget years only, is published in February/March, via the NIPRNET at the following encrypted and password protected address: https://www3.osc.army.mil/sm/icapp.

9.3.5 Military Inter-Departmental Purchase Requests.

9.3.5.1 Funded Procurement MIPRs. After the Programming and Budgeting and Execution System (PPBES) stages, the actual procurement of ordnance begins with Congressional approval of the budget and subsequent allocation of funds to NAVSEA by the Comptroller, DON. After receiving funding through Standard Accounting and Reporting System (STARS), the PM prepares a MIPR for submission to SMCA which cites the signal and fund codes and the appropriation. The SMCA does not commit, obligate, or expend funds against any MIPR that exceeds the total funds committed on the MIPR. Further, the SMCA accepts only those MIPRs whose funds can be obligated within the life of the appropriation.

9.3.5.2 MIPR Acceptance/Rejection. Within 30 days after receipt of a funded MIPR, the SMCA formally indicates acceptance or rejection by execution of a DD Form 448-2, Acceptance

of MIPR. If it becomes known after notification of acceptance that the price may not be maintained, the SMCA will resolve the price differential with the PM.

9.3.6 Procurement Ammunition Army Appropriation. Per PBD 432, FY 99 and later customer orders are to be processed through the Procurement Ammunition Army (PAA) appropriation on a reimbursable basis. Orders are priced at actual procurement cost.

9.3.6.1 Funded Reimbursable Authority (FRA). Based on the PRESBUD Submission of requirements, the JMC requests FRA to cover all non-Army requirements. During the April/May timeframe, JMC re-validates the customer's requirements and requests the appropriate level of FRA from higher headquarters.

9.3.6.2 Obligation of Orders. No procurement can be made in advance of a funded order. Customer funds are obligated upon acceptance as reimbursable Economy Act Orders; however, obligation is limited by the life of the customer funds. In either case the JMC must provide or enter into contracts to provide the requested goods or services before the obligation life expires. At the end of the appropriation life (three years for procurement appropriations) funds are adjusted down to match actual obligations and unobligated funds are returned to the customer. Disbursements may not be made after the appropriations close (eight years for procurement appropriations).

9.3.7 Contract Award.

9.3.7.1 Pre-award Survey. Based on the advanced planning data contained in the CAP, PDPs, and other documentation, JMC prepares bid packages and initiates contract solicitation. After receiving the funded MlPRs, JMC proceeds to award of contract. If on-site inspection of prospective contractors is necessary, the Procurement Contracting Officer (PCO) may arrange a pre-award survey of the contractor's facilities and equipment. The Navy AEA and DA (or other service representative if the Navy is not the developing service) will assist and advise the PCO as to the technical capability of the contractor.

9.3.7.2 Post-award Conference. The PCO, the Contract Administration Officer (CAO), the contractor, or the PM/AEA shall participate in post-award for first time award to a contractor. This may be requested if difficulties were experienced in previous procurements of the item, or there exists a high risk of failure due to item complexity, urgent delivery schedule, or technological considerations.

9.3.7.3 Quality Assurance Letter of Instruction (QALI). After contract award, the PCO invites the requiring Service and CAO to participate in quality assurance conferences. Prior to production, the AEA has responsibility for ensuring that the contractor and CAO understand and are capable of complying with the requirements for quality assurance and on-line inspections. To ensure this understanding, the AEA prepares and submits to the JMC the Quality Assurance Requirements (QAR) applicable to the procurement article. From this document, the JMC prepares the QALI. The requirements in the QALI are for guidance of the CAO and specify mandatory sampling inspection and test instructions. In-conference orientation and familiarization instructions regarding the quality control requirements of the contract are provided to CAO personnel having on-site review authority. This meeting provides opportunity for exchanging information regarding existing or anticipated problems.

9.3.7.4 Government Load, Assemble, and Pack (LAP). Explosive, incendiary, and dangerous ammunition items are usually not delivered by the contractor fully loaded or assembled except for small arms ammunition and some pyrotechnic/demolition items. JMC contracts for the various components that constitute the end item and arranges for their explosive LAP at U.S. Government and/or Industry facilities such as Crane or McAlester.

9.3.8 Procurement Status.

9.3.8.1 Procurement Cancellation. When all or any part of the quantity requested in a MIPR is to be canceled, the PM will notify the JMC who advises concerning termination charges. If, after examining the charges, the PM determines that termination action is to be pursued, the PM will submit an amendment to the MIPR directing termination.

9.3.8.2 MIPR Reviews. In accordance with a mutually agreeable schedule, JMC and the PM may conduct periodic MIPR reviews. These reviews address, but are not limited to, funding, delivery, production, scheduling, price changes, billing and payments, lead time, program projections, and processing methods. Billings for both advance and progress payment requests are submitted by JMC on Standard Form (SF) 1080. All significant changes that affect the contents of a MIPR must be processed by the PM as formal MIPR amendments (DD Form 448). These include changes in quantity, prices, funds, National Stock Number (NSN), part or drawing number, specification, delivery schedules, and engineering changes. No formal MIPR amendments are required for nontechnical, minor, or administrative changes such as shipping or destination, or clarification of item description or component entities. These are communicated to the JMC by mutually acceptable means.

9.3.8.3 Procurement/Renovation/Production File. As Inventory Manager, NAVSUP GLS AMMO maintains OIS-W, a central PRP status file for ordnance items. This file provides a mechanized record of internal and external procurement and maintenance actions from the time a MIPR or procurement document is issued until material delivery has been completed. For external procurements NAVSUP GLS AMMO relies on the PM to provide procurement action status as it occurs to maintain an accurate and complete database. The file record's item nomenclature, Department of Defense Identification Code (DODIC)/stock number, applicable funding and MILSTRIP numbers, applicable procurement document numbers, and delivery schedules are loaded in the file when MlPRs are accepted and when contracts are awarded. NAVSUP GLS AMMO therefore has document tracking capability which enables it to keep up-to-date status on each procurement delivery in OIS-W.

9.3.8.4 Procurement Status System (PSS) File. The Navy AEA maintains a status file which receives information from the PRP file at NAVSUP GLS AMMO, as well as additional information entered by the AEA personnel on production actions and problems. This file provides more detailed information on production status for the PM and AEA to properly manage their procurement programs.

9.3.8.5 SOSMA Form 38s. DOD 5160.65-M requires JMC to furnish monthly delivery status reports on SOSMA Form 38s to the requiring Service. These reports show the progress of items being acquired or produced by the SMCA. These reports contain the requirements schedule, current forecast schedule, quantity currently available, and the cause of delay or slippages. These forms are sent by the supply personnel in the JMC to NAVSUP GLS AMMO and AEA for entry into the PSS.

9.3.8.6 Prepositioned Material Receipt Cards (PMRCs). NAVSUP GLS AMMO loading of delivery schedules from the Form 38s into the OIS-W procurement files enables the establishment of due-ins and the generation of PMRCs to prospective receiving field activities. For items not being delivered by the SMCA, NAVSUP GLS AMMO relies on the activity assigned by the PM to provide the required delivery schedules for entry into OIS-W. New PMRCs are forwarded whenever delivery schedules are changed or updated. This is often the only advanced notice of incoming assets that an activity gets for receipt and storage personnel workload planning.

9.3.8.7 SOSMA Form 45s. The JMC also utilizes SOSMA Form 45s. This form shows the actual production schedules at the JMC and contractor facilities. These forms are available to the Navy Liaison (NVLNO), Navy PM, and AEA to obtain additional information not contained on the SOSMA Form 38.

CHAPTER 9.4

Configuration Management

Table of Contents

Paragraph	Subject	Page
9.4.1	General	9-4-1
9.4.2	Configuration Identification	9-4-2
9.4.3	Configuration Control	9-4-7
9.4.4	Configuration Status Accounting	9-4-11
9.4.5	Configuration Audits	9-4-13

CHAPTER 9.4

Configuration Management

9.4.1 General.

9.4.1.1 Configuration Management (CM). Historically DOD has had a military standard addressing the requirements for configuration management. The latest configuration management directions were consolidated in MIL-STD-973. With the philosophy of acquisition reform to reduce the level of prescription on how things should be accomplished, this standard has been cancelled without replacement. DOD has adopted ANSI/EIA-649 and has published MIL-HDBK-61 as guidance for configuration management. The program office has issued a 2T ammunition specific, configuration management plan. Configuration management remains an all important discipline in the era of acquisition reform.

a. It integrates the engineering technical and administrative actions required to identify, document, maintain, and monitor the functional and physical characteristics of an item during its life cycle.

b. It controls and records the status of all changes proposed to Configuration Items (CIs) and their related documentation.

c. It facilitates continuity and direction during design, production, operation, and maintenance to ensure that the item is what it was meant to be throughout its life cycle, and that all supporting technical documentation represents that item.

9.4.1.2 Configuration Evolution. The configuration of an ammunition end item is determined during design, derived and proven during development, established during production, and maintained during operation and support. The concept is simple; implementation is time-consuming, complex, and iterative. The evolution of a typical CI usually involves the following repetitive sequence of events:

a. Identify what is to be produced.

b. Operate and test.

c. Control changes.

d. Re-identify.

e. Produce.

f. Control changes.

g. Re-identify and modify.

h. Operate and test.

i. Control changes.

j. Re-identify and modify.

k. Operate and maintain concurrently with follow-on production to end of life cycle.

9.4.1.3 Configuration Regulation. The basic guidance for configuration identification and management in the Navy is contained in MIL-HDBK-61. Configuration control of in-service ammunition items, although discussed in Section 10-1 of this manual, predominantly refers back to this chapter. The steps of configuration management will be covered starting with those involved in item identification, then item control, item status accounting, and item audit.

9.4.2 Configuration Identification. The purpose of configuration identification shall be to incrementally establish and maintain a definitive basis for control and status accounting for a CI throughout its life cycle. Item identification begins with the generation of the components of the PDP.

9.4.2.1 Procurement Data Package. The PDP is the technical documentation submitted to the JMC or other procuring office for use by the PCO. Other procuring offices utilized include NSWC, Crane, NAVSUP GLS AMMO, and Army Research, Development and Engineering Command (ARDEC). The PDP components are as follows.

a. TDP. All documents prepared by the DA necessary to identify the technical aspects of the product. These documents include required drawings, performance specifications and Military, Federal, and Joint Service specifications and standards, etc. It also includes an ADL, a top level document which lists all applicable documents, exceptions to these documents and additional requirements.

b. Contract Data Requirements List (CDRL). The CDRL is a listing prepared by the AEA and/or procuring office to identify the required data item deliverables from the contractor.

c. QA Provisions. These provisions identify the requirements for a quality program, statistical process control, supplemental quality assurance provisions and survey, audit and test requirements. The survey and test requirements include Pre-Award Surveys (PAS), Post-Award QA Conferences, FAT, and any other conference, survey, audit, or review requirements.

d. Acceptance Inspection Equipment (AIE). Lists equipment such as a tabulation of gages required for certification and acceptance of ammunition items.

e. Configuration Management Plan (CMP). The CMP describes the processes, methods, and procedures to be used to manage the functional and physical characteristics of the assigned CI.

f. DD-254 Security Classification Requirements. These requirements contain security classification of CI and associated requirements. Refer to Section 13-2 for further explanation.

g. MIPR standard clauses (if procured by another service).

h. Aperture Card Inventory List (optional).

i. PDP Checklist/Return Receipt.

9.4.2.2 TDP. Preparation of the TDP is a prerequisite to obtaining Approval for Production and is accomplished for all development items. The standardization of documentation is essential for the transitioning of items to SMCA and for developing and maintaining the PDPs to support procurement. The TDP will contain those drawings, standards, and specifications needed to

manufacture, package, ship, maintain or renovate, and accept a CI. The technical data in the TDP is incorporated into Automated Configuration Management Data System (ACMDS) and upon AFP defines the product baseline. Changes from the product baseline are substantiated by approved waivers, deviations, ECPs, and ADL change notices.

9.4.2.3 ADL. The AEA, in coordination with the DAs, prepares an ADL which identifies and describes the production configuration of each item introduced into the ammunition supply system. Each ADL contains a listing of its pertinent drawings, specifications, standards, provisions, and requirements used as the current baseline for procurement, loading, and maintenance. The ADL also identifies the ADLs of each of the item's subassemblies, support equipments and test sets. Each ADL is uniquely numbered to apply to one specific line item configuration. This number is the same as that assigned to the assembly or top level drawing for the item, if possible. The basic number is suffixed for each modified version and is recorded in ACMDS. This number is used as reference throughout the procurement process and is cited in the procurement contract and on MIPRs. It is also included in the PDP. In addition to its use as a control document, the ADL provides basic technical data for the formulation of Ammunition Data Cards (ADCs).

9.4.2.4 Classification of Characteristics (CC). A CC analysis is conducted by the DA and an appropriate CC code assigned to appropriate physical and function characteristics of an ammunition item. The CC code categorizes the characteristic as critical, major, or minor and is cited on each drawing, specification, or other relevant documents, as follows:

a. Critical C1 through C99.

b. Major M101 through M199.

c. Minor 201, 202, etc.

Supplementary symbols may be assigned which suffix the CC code to convey specific information (e.g., E - requires exceptional testing or inspection, L - potentially hazardous, etc.). CC codes assist in decision-making by reducing judgment demands and providing visible indicators useful in determining the disposition of nonconforming material. The codes are a useful tool in the decision process for approving or disapproving contractor recommended deviations. DOD-STD-2101, CC, is the source of information concerning their assignment and use in configuration management.

9.4.2.5 Mark/Mod Assignments. Navy designed ammunition items and components are generally identified by nomenclature followed by a Mark (MK) and Mod number, for example:

Flare Decoy MK 48 Mod 0

Flare Decoy MK 48 Mod 1

MK 48 Mod 0 is assigned to the first approved design with a unique set of physical and performance characteristics. Subsequent improvements or design changes not affecting performance characteristics will result in a modification which is identified as Mod 1. Army items are identified by a similar system of nomenclature and alphanumeric numbering. For example:

Charge Demolition M5A1

M5 is the first approved design in the demolition charge family with characteristics sufficiently different from the M4 design. The A1 is the first modification.

9.4.2.6 Lot Control. Ammunition items vary in complexity from a simple 2 pound cast block of TNT in a cardboard/metal container with a well for a blasting cap to the guided projectile that has several explosive and electronic components that must function in consonance. Primary and secondary components are produced by a number of commercial manufacturers under diverse conditions and with various approved deviations. The assignment of lot numbers and control of component homogeneity during production is compartmentalized by manufacturer production line and production period for all components and the end item produced. Lot data records provide the identification of these compartments (lots, lot strata) for tracking and control of any given lot throughout its life cycle. Some ordnance items are mass-produced as low-cost/ high-volume material because they contain a minimum of parts or components. For example, cartridge caliber 9mm, M882, consists of a bullet, a cartridge case, a primer, and smokeless powder. These components and the assembled round are produced in large quantities by automatic equipment at a rapid rate under constant production conditions. The probability is that large quantities are homogeneous. New lot numbers need not be assigned except for a change in component supplier, contract termination, or completion of a month's production run. Lot sizes can run as high as six-digits. Lot limiting factors for a complex item with low-to-moderate rate of production, such as gun ammunition, would result in lot sizes that would seldom exceed 10,000 rounds. For ships' combat readiness risk mitigation, arbitrary maximum lot limits have been imposed regardless of homogeneity for certain gun ammunition items.

TYPES	ROUNDS
76mm Fixed Cartridges	5,000
5" Propelling Charge	5,000
5" Projectiles HE	1,000
5" Illuminating Projectiles	500
5" PBXN 106	100 - 2,000

9.4.2.7 Lot Numbering Systems. As the original military agencies for design, development, and production of ammunition, the Navy and Army developed lot numbering systems to accommodate their own procedures for control of the various ammunition commodities. In the interest of inter-service support in ammunition supply and management, particularly in the exchange of reclassification actions because of malfunctions of common items, lot numbering was standardized in MIL-STD-1168.

a. Items with lot numbers dating back to 1944 are still in stock and acceptable for use after minor maintenance. Expenditures of ordnance from 1944 to date have reduced many older lots to remnant quantities. By 1978 all Naval activities engaged in ordnance procurement or production complied with MIL-STD-1168. Phaseout of the old style lot numbers by attrition and conversion during major maintenance is a long-term process. Management and control of ordnance will require backup data and an understanding of both systems.

b. U.S. Navy Old Style Lots.

(1) For gun ammunition, fixed rounds, separated rounds (projectiles and propelling charges), and separate loading rounds (projectiles, bag propellant sections, and primers) the lot structure is as follows:

BE-244-C-68

(a) Prefix. A two-letter prefix is used for new ammunition. In the example, the letters BE are permanently assigned to a caliber and type of gun ammunition item of issue, in this case a 5”/38 Projectile Anti-Aircraft, Common with a Mechanical Time Fuze (MTF) MK 50 or MK 349 installed. The use of a prefix as a part of gun ammunition lot numbers was considered necessary as a double check for nomenclature and Department of Defense Identification Code (DODIC)/Navy Ammunition Logistics Code (NALC) (as in a message garble) and because gun ammunition items of issue were not assigned complete round Mark and Mod designations prior to 1978. The prefix is expanded to three letters by the addition of an “R” to signify a renovated lot (e.g., BER-1-H-74).

(b) Lot Sequence Number. A number from 1 to 9999 assigned in sequence for each lot produced. The numbers begin with 1 for the first lot produced in the year production begins. Lots started on or after 1 January of the next year revert back to lot 1.

(c) Manufacturers Identification. A one, two, or three letter identification of the activity manufacturing or renovating the item. In the example, “C” is Crane Army Ammunition Activity.

(d) Calendar Year of Production/Renovation. A two-digit number to identify the year in which production or renovation of the ammunition lot was started.

(2) Pyrotechnics, Demolition Items, and Fuzes. USN designed and produced pyrotechnics, demolition items, and gun ammunition fuzes generally are identified by a Mark and Mod permitting the elimination of the prefix. These lot numbers are structured as follows:

206-CRA-69 or 206CRA-0769 or 206-CRA 07/69

(a) Lot Sequence Number. A number beginning with 1 when production starts. In some cases (in-house production) the first lot started after the new year reverts back to lot 1. In other cases (commercial manufacture), the sequence number continues for the length of the contract and add-on procurements. Numbering continued, provided there was no break in production.

(b) Manufacturer’s Identification. The same as for gun ammunition.

(c) Calendar Year of Production. A two-digit number identifying year of production or a four-digit number, with or without a slash, identifying the month and year of production.

c. U.S. Army Old Style Lots.

(1) The Navy uses a number of common items designed and procured by the Army. These are small arms ammunition items up to and including .50 caliber cartridges, grenades, anti-tank rockets, rockets, pyrotechnics, and demolition and mortar ammunition items. Army management of ammunition initially required only the control of the manufacturer’s identification and sequential numbering of lots produced. Relative age as identified in Navy lots was maintained on master records in headquarters and available on ADCs in the field. These early old style lots were structured containing these two elements, for example:

WCC-1 0950

(2) As production quantities increased with multiple production lines and follow-on reorders, an interfix number was added to ammunition lot numbers to group a series of lots into homogeneous lot strata. Interfix and sequence numbers are separated by a dash as follows:

(3) The combination of two or more lots of complete rounds to form one lot, such as in linking complete rounds of .50 caliber cartridges, was handled by inserting a "-L" after the manufacturer's identification as follows:

RA-L-30-57 or LC-L-1-47

d. General Policies and Procedures for Navy and Army old style lot numbering systems.

(1) Manufacturer's (including in-house production and renovation activities) identification symbols as listed in MlL-HDBK-1461 were used.

(2) The Navy and Army used a system of suffixing lot numbers. One or two letters were added after the last digit in the lot.

(a) U.S. Army - The suffix indicated that a major or minor maintenance action had been performed "on the parent lot. When the assignment of the suffix "D" is directed by higher authority, for example, the maintenance activity must ensure that previous maintenance actions required by suffixes A, B, and C have been performed as well.

(b) U.S. Navy - A single letter suffix indicated that a major or minor maintenance action, not involving a primary component replacement, had taken place. The significance of the ABC sequence is the same as the Army system except, that a suffix "X" for X-ray examination is added to any other letter resulting in a two-letter suffix.

(c) U.S. Navy - For major maintenance involving ammunition breakdown and replacement of a component, the item was recertified at the same time. Because of the recertification, a letter "R" was added to the caliber and type two-letter prefix resulting in an entirely new lot number.

(d) Navy and Army - The use of dashes for spacing between lot number elements was required.

(e) Navy and Army - When maintenance had been performed as directed resulting in the application of a suffix, a new data card was prepared for each round processed (or the old data card is changed) by adding the suffix and a notation that the required maintenance had been performed. For example, the notation for the suffix "D" would be the fourth notation, following the notations covering maintenance actions pertaining to suffixes "A", "B", and "C".

e. New Style Lot Numbering System (MIL-STD-1168B) The standardization of ordnance lot numbering was based on the common requirements of the various lotting systems of manufacturer identification and sequential numbering of quantities of identical items. Essential service requirements of homogeneity grouping and age identification were added resulting in a 13-character basic lot number. Provisions were then added to annotate lots by letters to indicate a nonstandard lot number or a reworked basic lot. Standard lot numbers are constructed as follows:

CRA78K001-415A

(1) Characters 1-3. Manufacturer's identification as listed in MIL-HDBK-1461A. Manufacturers with one- or two-character codes will have remaining positions filled with dashes (e.g., P- or PA-).

(2) Characters 4 and 5. A two-digit numeric code identifying the year of production (e.g., item produced in 1978 is coded 78).

(3) Character 6. A single alpha code signifying month production of the lot was initiated (e.g., A-January, B-February, etc.).

(4) Characters 7-9. Lot interfix number, sequentially from 001 thru 999.

(5) Character 10. Hyphen required for all standard lots. For nonstandard lots or lots requiring special codes the hyphen is replaced by an alpha (such as H-Hybrid Lot, M-Modified Lot, V-Overhauled Lot, see MIL-STD-1168A para 5.1 for a complete list of codes).

(6) Characters 11-13. Lot sequence number from 001 thru 999. (The next lot produced after lot 999 requires an interfix number change and reverts to 001).

(7) Character 14. A single alpha character suffix is added after the final position to signify the basic lot has been reworked. For lots reworked more than once, sequential alphas are assigned. The alphas E, I, O, or X shall not be used.

9.4.2.8 Ammunition Data Cards.

a. ADCs, prepared in accordance with MIL-STD-1168B, are used to identify the composition of an ammunition lot when it is initially produced, or when it is modified, reworked, or regrouped. The ammunition data card is a record of the basic configuration of the ammunition lot, with reference to documents containing the configuration details. In addition to item nomenclature, NSN/DODIC, drawing and specification numbers, lot number, manufacturer/loading activity, and quantity and date of production, data cards identify all primary components by manufacturer, lot number, and quantity. It becomes a historical record when the ammunition lot is reworked by replacement of components, indicating dates of renovations, new components, and original lot number for complete traceability.

b. Data cards contain the complete detailed lot identification of the ammunition item and its lot history. They are kept up to date at a central repository at the JMC for all SMCA assigned ammunition items. In some cases a copy of the data card is found in the waterproof protective cap of each projectile, in cartridge and propelling charge tanks, and in packing containers of multipack items. There is, however, no longer a Navy requirement for a data card to accompany each ammunition item.

c. Historically, ADCs were prepared on DD Form 1650 made of 5 by 8 inch commercial manila tag board or equivalent. More recently ADCs are prepared using a government furnished Ammunition Data Card Program, developed by JMC. An 8.5 by 11 inch printout is used for hard copy distribution. The central repository of ADCs located at the JMC has the information loaded in a computer database. A duplicate of the data card program with enhanced search and print capabilities is available on CORP website at https://ammoeng.crane.navy.mil/MainPage.cfm. The new user registration at http://www.crane.navy.mil/ammoeng/scripts/UsersRegistrationForm.cfm.

9.4.3 Configuration Control. Configuration control is the process to manage preparation, justification, evaluation, coordination, disposition and implementation of proposed engineering

changes and deviations to effected CIs and baselined configuration documentation. Configuration control continues throughout the life cycle of the CI.

9.4.3.1 Deviations. MIL-HDBK-61A and program office policy for CM provides guidance on procedures for processing requests for deviations. The handbook defines a deviation as:

a. A specific written authorization to depart from a particular requirement(s) of an item's current approved configuration documentation for a specific number of units or a specific period of time. (A deviation differs from an engineering change in that an approved engineering change requires corresponding revision of the item's current approved configuration documentation, whereas a deviation does not).

b. Deviations represent temporary or limited departures from baseline requirements or characteristics in the documentation. Deviation requests are classified as critical, major, or minor based on the classification of the defect and must be proven as justified and necessary by the contractor before being granted. No deviation (critical deviation) having an adverse effect on safety is approved. If a proposed deviation is recurrent (i.e., repetition or extension of a previously authorized departure from a requirement), it is generally viewed as evidence that there is either a deficiency in the design documentation or in the practices of the manufacturer. If so, review is made by the AEA to determine the disposition of the contractor's request for deviation. If appropriate, the AEA may recommend that corrective measures be taken (e.g., that an ECP be prepared).

9.4.3.2 Request Processing.

a. Deviation content requirements must be specified in applicable contract requirements including the CDRL/DD1423 and Data Item Description of the contract. In general the contractor may use the following formats for requesting deviations:

(1) DD Form 1694, Request for Deviation.

(2) Contractor design.

b. The contractor submits all critical, major, and minor deviation requests to the procuring activity (JMC or Navy procuring activity) via the Contract Administration Officer (CAO), who may add comments and recommendations. Copies are forwarded concurrently to the cognizant DA, the AEA, and NVLNO for SMCA procured items.

c. Each request for a deviation is reviewed by the NAVSEA engineering agents designated by the Program Manager (PM). The AEA is the action officer for contractor submitted deviations and classifies the defect/deviation relating to in-production ammunition items. The cognizant DA reviews the contractor's request for impact on design, performance, safety, producibility, and interfaces, and submits relevant comments and recommendations to the AEA. After additional review, that includes consideration of factors such as maintainability and life cycle costs, the AEA may approve or reject minor deviations. Those that are classified major or critical are forwarded for final approval or rejection by the PM.

d. Deviations for items used by the Navy, but developed by another Service, will be coordinated with the Navy by the JMC. In such cases, the JMC retains approval authority; however, the Navy can refuse to accept material covered by a JMC approved deviation with which they do not concur (would adversely affect Navy safety/performance).

e. A complete record for Navy developed items is maintained in ACMDS covering all waiver and deviation requests and actions. It is cross referenced to permit identification by contract, part number, and type of item. This file is used to facilitate the review of incoming requests and to audit corrective actions.

9.4.3.3 Engineering Change Proposals.

a. An essential feature of configuration management is change approval, which complements the inherent change potential of complex items with the necessary responsiveness in correcting deficiencies or instituting enhancements. The events in the change approval process must operate as coherent elements within the centralized configuration management system (i.e., ACMDS). Engineering and functional requirements of an ammunition item are strictly defined by a technically qualified team prior to its procurement. Therefore, an in-depth technical review is necessary for those changes made during production. The evaluation of each proposed change must consider all the factors of that change, such as design performance, costs, impact on delivery schedules, operational effectiveness, maintainability, logistics, and training. The evaluation of proposed changes also includes the consideration of the cost benefits of retrofitting in-stock and in-production assets versus operating and maintaining multi-configurations of the item.

b. DOD 5160.65-M emphasizes that the Navy retains responsibility for the overall configuration management and control of SMCA assigned ammunition items developed by the Navy. This gives the PM the final authority over changes to items developed by NAVSEA. The JMC has the responsibility to provide comments to the AEA concerning the potential impact of the Navy's approval or disapproval of contractor-initiated ECPs. Information and recommendations by the JMC relate to the impact of proposed changes with respect to costs and scheduled deliveries, or to future maintenance within the wholesale inventory. On Joint Service usage items, all requiring Services are provided the opportunity to accept or reject change proposals for specified applications. Technical exceptions and unique Service requirements are reconciled among the Services. During production, the JMC participates in the configuration control responsibility by interfacing with the Services in evaluating:

(1) Class I actions, which include urgent, emergency, and routine ECPs during current SMCA procurement contracts,

(2) Class II actions, and

(3) Configuration Management of jointly used ammunition items regardless of procurement activity. Where wholesale ammunition inventories are affected by a proposed change, the JMC is provided sufficient visibility and data to ascertain impact if the proposed changes are incorporated.

c. Engineering changes are categorized in MIL-HDBK-61 as a Class I engineering change when one or more of the factors listed below is affected.

(1) The Functional or Allocated Configuration Documentation (FCD or ACD), once established, is affected to the extent that any of the following requirements would be outside specified limits or specified tolerances:

(a) Performance.

(b) Reliability, maintainability or survivability.

(c) Weight, balance, or moment of inertia.

(d) Interface characteristics.

(e) Electromagnetic characteristics.

(f) Other technical requirements in the specifications.

NOTE

Minor clarifications and corrections to FCD or ACD shall be made only as an incidental part of the next Class I ECP and accompanying Specification Change Notice or Notice of Revision (NOR), unless otherwise directed by the AEA.

(2) A change to the TDP, once established, will affect the FCD or ACD or will impact one or more of the following:

(a) Government Furnished Equipment.

(b) Safety.

(c) Compatibility or specified interoperability with interfacing CIs, support equipment or support software, spares, trainers or training devices/equipment/software.

(d) Configuration to the extent that retrofit action is required.

(e) Delivered operation and maintenance manuals for which adequate change/revision funding is not provided in existing contracts.

(f) Preset adjustments or schedules affecting operating limits or performance to such extent assignment of a new identification number is required.

(g) Interchangeability, substitutability, or replaceability as applied to CIs, and to all subassemblies and parts except the pieces and parts of non-repairable subassemblies.

(h) Sources of CIs or repairable items at any level defined by source-control drawings.

(i) Skills, manning, training, biomedical factors, or human-engineering design.

(3) Any of the following contractual factors:

(a) Cost to the Government including incentives and fees.

(b) Contract guarantees or warranties.

(c) Contractual deliveries.

(d) Scheduled contract milestones.

d. Engineering changes are categorized in MIL-HDBK-61A as a Class II when it does not fall within the above definition of a Class I engineering change. Examples of Class II engineering changes are:

(1) Changes in documentation only (e.g., correction of errors, addition of clarifying notes or views).

(2) Minor changes in hardware (e.g., substitution of an alternate item) which do not affect form, fit, or function.

e. All ammunition ECPs are reviewed by an in-service Configuration Control Board (CCB) chaired by the AEA. (Most ammunition changes are processed by the CCB without the necessity of formally convening the board.) The AEA coordinates the following review actions:

(1) All ECPs are reviewed by the cognizant DA and the AEA.

(2) Class I ECPs are forwarded for additional review and approval by the PM.

(3) ECPs affecting interface with external systems are reviewed by the cognizant systems manager.

f. Original ECPs with rationale and supporting data are submitted directly to the cognizant DA with information copies to the PM, AEA, and to the cognizant complete round DA. The DAs responsibility is to classify and review the ECPs based on performance, design characteristics, safety considerations, and logistics support implications. This review is performed with benefit of the recommendations and data provided by the complete round DA.

g. The cognizant DA has the authority to originate ECPs and to approve or disapprove those originated elsewhere. The ECPs are then submitted to the AEA with supporting engineering data and rationale. Since ECPs can result in a change to technical documents, drawings, and the ADL, etc., the cognizant DA may prepare a NOR for submission to the AEA with approved ECPs. The NOR is a form for proposing revisions to a drawing, parts lists, and other technical and engineering documents.

h. Upon receipt of an approved ECP from the DA or PM requiring a revision to procurement documentation, the AEA evaluates the relevance of the engineering changes to current and planned procurements and approves or disapproves the NOR prepared by the DA. An approved NOR is promulgated to notify users that the documentation has been revised.

i. The activity having custody of the master technical documents pertaining to the approved NOR, revises the documents and makes an electronic image available for inclusion in the AEAs master documentation files.

j. The AEA establishes a record of all relevant ECP and NOR data in the ACMDS.

k. The AEA ensures that the SMCA is forwarded updated or modified PDPs prior to finalizing ECP and NOR actions.

9.4.4 Configuration Status Accounting. The purpose of Configuration Status Accounting (CSA) is to ensure accurate identification of each CI and delivered unit so that the necessary logistics support elements can be correctly programmed and made available in time to support the CI. An adequate and accurate CSA system will enhance the program and functional managers' capabilities to identify, produce, inspect, deliver, operate, maintain, repair, and refurbish, etc., CIs in a timely, efficient, and economical manner in satisfying their assigned responsibilities. For surface ammunition, ACMDS fulfills this function.

9.4.4.1 CSA Requirements.

a. Identify the current approved configuration documentation and identification number associated with each CI.

b. Record and report the status of proposed engineering changes from initiation to final approval/contractual implementation.

c. Record and report the results of configuration audits to include the status and final disposition of identified discrepancies.

d. Record and report the status of all critical and major requests for deviations and waivers which affect the configuration of a CI.

e. Record and report implementation status of authorized changes.

f. Provide the traceability of all changes from the original baseline configuration documentation of each CI.

g. Report the effective and installation status of configuration changes to all CIs at all locations.

9.4.4.2 Configuration Management Documents. ACMDS will manage the following documents:

a. ADLs.

b. ADLs - Change Notices.

c. ADLs - Notice of Revisions.

d. ECPs.

e. NORs.

f. Waivers.

g. Deviations.

h. ADCs.

i. Depot Maintenance Work Requirements.

j. Contracts.

k. MIPRs/Purchase Orders/Work Requests.

l. Drawings.

m. Specifications/Standards.

9.4.4.3 ACMDS Computer and Connectivity. The ACMDS can be accessed from within or without NSWCDIV Crane via the CORP website. ACMDS utilizes a relational database management system, which enables the surface ammunition DA/AEA/In-Service Engineering Agent (ISEA) to communicate with the following systems containing configuration data:

a. Lot Data Card System. Complete U.S. Army Operations Support Command (OSC) lot data card system.

b. Document Imaging System. General document storage system.

c. Procurement Status System. Holds data on all surface ammunition procurements.

d. Rastor Image, Storage, Conversion, and Retrieval System. Drawing management system.

e. Communications with these systems enable those involved in configuration management to do the following:

(1) View ammunition lot data cards that are linked to ADLs in ACMDS.

(2) Call up any scanned document that is referenced in ACMDS, such as Contracts, ECPs, Waivers, Deviations, ADLs, NORs, MIPRs, etc.

(3) View drawings that are managed in ACMDS from the RISCR system.

9.4.4.4 ACMDS Reports. ACMDS will provide a variety of canned and ad-hoc reports to all ACMDS query users.

a. ADLs.

b. Items Used on ADLs.

c. Contract Listings.

d. ECP/Waiver/Deviation Listings.

e. NOR Listings.

f. MIPR Listings.

g. Specification/Standards Listings.

h. Drawing Listings.

i. Items Referenced on Drawing Listings.

j. Depot Maintenance Work Requirements Listings.

The above reports make up the majority of the ACMDS reports, but are not the only reports that ACMDS can provide. ACMDS has the capability to allow the user to create reports tailored to whatever parameters are required at the time.

9.4.5 Configuration Audits. As defined in MIL-HDBK-61A, configuration audits are normally performed before establishing a Product Base Line (PBL) for the item. Configuration audits consist of the Functional Configuration Audit (FCA) and the Physical Configuration Audit (PCA).

9.4.5.1 FCA. An FCA shall be conducted for each configuration item for which a separate development or requirements specification has been baselined, except as otherwise required by the contracts, and for the overall system, if required by the contract. The objective of the FCA will be to verify the CIs and system's performance against its approved configuration documentation. Test data for the FCA shall be that collected from the test of the configuration of the

item that is to be formally accepted or released for production (prototype or preproduction article). If a prototype or preproduction article is not produced, the test data shall be collected from test of the first production article. Subject to prior Government approval, the FCA for complex items may be conducted in increments. In such cases, a final FCA may be conducted to ensure that all requirements of the FCA have been satisfied. In cases where item verification can be completely determined only after system integration and testing, the final FCA shall be conducted using the results of these tests.

9.4.5.2 PCA. The PCA shall be the formal examination of the as-built configuration of a CI against its design documentation. The PCA for a CI shall not be started unless the FCA for the CI has already been accomplished or is being accomplished concurrent with the PCA. After successful completion of the audit and the establishment of a PBL, all subsequent changes are processed by formal engineering change actions. The PCA also determines that the acceptance testing requirements prescribed by the documentation are adequate for acceptance of production units of a CI by quality assurance activities. The PCA includes a detailed audit of engineering drawings, specifications, technical data, and tests utilized in production of CIs. The PCA shall include an audit of the released engineering documentation and quality control records to make sure the as-built or as-coded configuration is reflected by this documentation.

9.4.5.3 Quality Deficiencies. Full-scale production begins after the approval of the PBL for an ammunition item, the award of the production contract, and the completion of the post-award survey. If quality deficiencies emerge during production, and delivery lots are rejected, the Navy may request the procuring activity to authorize an on-site configuration audit. The on-site audit is scheduled and coordinated by the AEA. The DA, CAO, and other activities participate as required.

9.4.5.4 Additional Configuration Audits. Additional audits may be performed during production for selected changes to the item's configuration documentation or when contractors are changed. Broad policies governing configuration audits for SMCA procured items are set forth in DOD 5160.65-M. This document provides that a PCA may be conducted at the contractor's facilities when requested by the developing Service. (The audit may be performed in coordination with the requiring Service when the requiring Service is other than the developing Service.) Also, an FCA may be conducted by witnessing functional tests and reviewing test data at the contractor's facilities. The CAO must respond to such requests for audit and provide access to the contractor's software (production procedures, quality assurance procedures, process control data, etc.) and hardware employed in connection with the item being audited as allowed for in the contract.

9.4.5.5 Audit Report and Deficiency Correction. Upon the completion of each audit, a report of findings is submitted to the procuring activity by the AEA. Deficiencies identified during PCAs and FCAs require corrective action within 30 days. If these timeframes cannot be met, the procuring activity will advise the AEA accordingly, citing the reasons for delay. Problems are resolved between the AEA and the procuring activity.

9.4.5.6 Audit Recording. In all matters pertaining to configuration control and management, the results of the contractor audit and the corrective action taken are recorded in Document Imaging.

CHAPTER 9.5

Product Improvement Program

Table of Contents

Paragraph	Subject	Page
9.5.1	General	9-5-1
9.5.2	Product Improvement Program Abstract	9-5-1
9.5.3	PIP Plan	9-5-1
9.5.4	Reports and Reviews	9-5-2
9.5.5	Closure	9-5-2

CHAPTER 9.5

Product Improvement Program

9.5.1 General. As explained in the DOD Financial Management Regulation, DOD 7000.14-R, Product Improvement Programs (PIPs) within the current performance envelopment on systems in production shall be funded with procurement appropriations. For 2T conventional ammunition that is the PAN-MC appropriation. As part of their ongoing ammunition engineering efforts Engineering Agents (EAs) may identify design deficiencies, or new technologies, which would reduce life cycle costs, improve safety, increase reliability, improve producibility, etc. The annual review and selection process performed by the PM for new PIPs begins with the EA submitting a PIP Abstract.

9.5.2 Product Improvement Program Abstract. PIP abstracts for proposed PIPs are forwarded to the PM by 1 April each year as part of the annual update of the Three Year Plan for Engineering Support. The format of the abstract is described in the PMs PIP Policy and Guidance (P&G) Paper. The PM will review the submitted PIP abstracts, select those that should be developed into a formal plan, and assign a PIP number by 1 May. PIP abstracts assigned a number are to be uploaded to the CORP website at https://ammoeng.crane.navy.mil/MainPage.cfm. The new user registration at http://www.crane.navy.mil/ammoeng/scripts/UsersRegistrationForm.cfm.

9.5.3 PIP Plan.

9.5.3.1 Plan Contents. A PIP Plan is developed for each of the selected PIPs by the EA, as assigned by the PM. Each PIP Plan must address the following as directed by the PM:

a. PIP Objective - Including clearly defined goals with specified thresholds and objectives.

b. Technical Approach.

c. Breadth of Application (relevant calibers/components).

d. Plan of Action and Milestones (POA&M) (Microsoft© Project Submission).

e. Funding Requirements.

f. Test Plan.

g. Ammunition Expenditure Requirements.

9.5.3.2 DA Meeting. Each June the PM hosts a DA Meeting. The agenda includes EAs briefing PIP proposal abstracts, selected PIP plans and status of ongoing PIPs. The P&G paper provides additional guidance regarding preparation of PIP plans. All elements of the plan will be presented and discussed during the meeting. The PM will negotiate with the EAs on the fine details of the selected PIPs in July.

9.5.3.3 Finalized PIP Plans. The EAs will submit finalized PIP Plans for PM approval by 20 August. The PM will identify funded PIPs each September in the appropriate Engineering Support funding letter.

9.5.3.4 POA&M. Microsoft© Project has been selected as the common software for illustrating the POA&M. The POA&M shall show schedules, milestones and costs by major tasks at a minimum. The schedule will be saved as a Tracking Gantt with a baseline depicting the initial schedule of the PIP.

9.5.4 Reports and Reviews.

9.5.4.1 Quarterly Reports. Quarterly reports will be submitted on all PIPs to coincide with production engineering and financial status reports. Reports include:

a. An updated POA&M.

b. Financial status at the funding document level.

c. Narrative summarizing technical accomplishments and departures from baseline schedule and costs.

d. Earned value metrics including percent schedule variance and percent cost variance.

The POA&M, narrative summary and earned value metrics will be uploaded to the Conventional Ordnance Resource Portal engineering support website. Financial status will be reported as a part of the SEA Task quarterly financial report by the 15th of month following the end of each quarter.

9.5.4.2 Program Reviews. Program reviews will be conducted by the PM as required.

9.5.5 Closure. Each PIP will be officially closed upon completion or cancellation by a letter from the EA PIP manager to the PM by uploading it on to the CORP website. The letter shall include a final report and be submitted within six months of PIP completion or cancellation.

SECTION 10

In-Service Management

Table of Contents

Chapter	Subject	Page
10.1	In-Service Engineering	10-1-1
10.2	Mobile Ammunition Evaluation and Reconditioning Unit	10-2-1
10.3	Mishaps and Non-Nuclear Ordnance Discrepancies	10-3-1
10.4	Technical Manuals	10-4-1

CHAPTER 10.1

In-Service Engineering

Table of Contents

Paragraph	Subject	Page
10.1.1	General	10-1-1
10.1.2	Engineering Responsibilities	10-1-1

List of Illustrations

Figure	Title	Page
10-1-1	In-Service Engineering Organizational Relationships	10-1-2

CHAPTER 10.1

In-Service Engineering

10.1.1 General.

10.1.1.1 Engineering Activities. In-Service Engineering Agent (ISEA) responsibilities normally involve the same engineering activities within the Naval Sea Warfare Center (NSWC) Divisions that provided the acquisition engineering support. Functions include Design Agent (DA), Acquisition Engineering Agent (AEA), ISEA, and Ordnance Assessment Coordinator (OAC).

10.1.1.2 Perspective. The primary focus of in-service engineering management is to build, defend, and execute a balanced program of proactive and reactive measures to best achieve/maintain the Ready for Issue (RFI) objective for each ammunition item, within the fiscal constraints applied by the Navy budget.

10.1.1.3 Organizational Relationships. Figure 10-1-1 identifies the organizations involved in the in-service management processes and their relationship to each other.

10.1.2 Engineering Responsibilities. Annually, the Program Manager (PM) assigns engineering responsibilities for specific ammunition items to specific commands in a Tasking Statement in the Naval Sea Systems community known as a SEATASK. This Tasking Statement identifies the engineering task responsibilities, the ordnance items to which the tasks apply, and any special reporting requirements. This Tasking Statement is referenced in the annual funding document to specify the authorized use(s) of the funds being provided. Recurring engineering responsibilities are listed under the appropriate title.

10.1.2.1 Design Agent. DA engineering support responsibilities, identified in Paragraph 9.2.2.1 continue throughout the life cycle of the assigned ammunition item.

a. Specific In-Service Engineering Responsibilities.

(1) Conduct malfunction investigations, when assigned by the PM, or provide engineering and test support for investigations assigned to other DAs, ISEAs, or the Ordnance Assessment Agent (OAA) as requested.

(2) Determine corrective design changes for future production and configuration changes to correct existing stocks, when malfunctions are attributed to the basic design.

(3) Review and provide engineering comments, recommendations and justification for deviations affecting safety or design configuration.

(4) Prepare and update Technical Data Packages (TDPs) required for in-Service ammunition maintenance.

b. DAs providing in-service engineering support are funded with Operations and Maintenance, Navy (O&M,N) funds programmed annually based on projected requirements. Upon Congressional approval of the Budget, funds are allocated by the PM to each DA on Work Request (WR) documents.

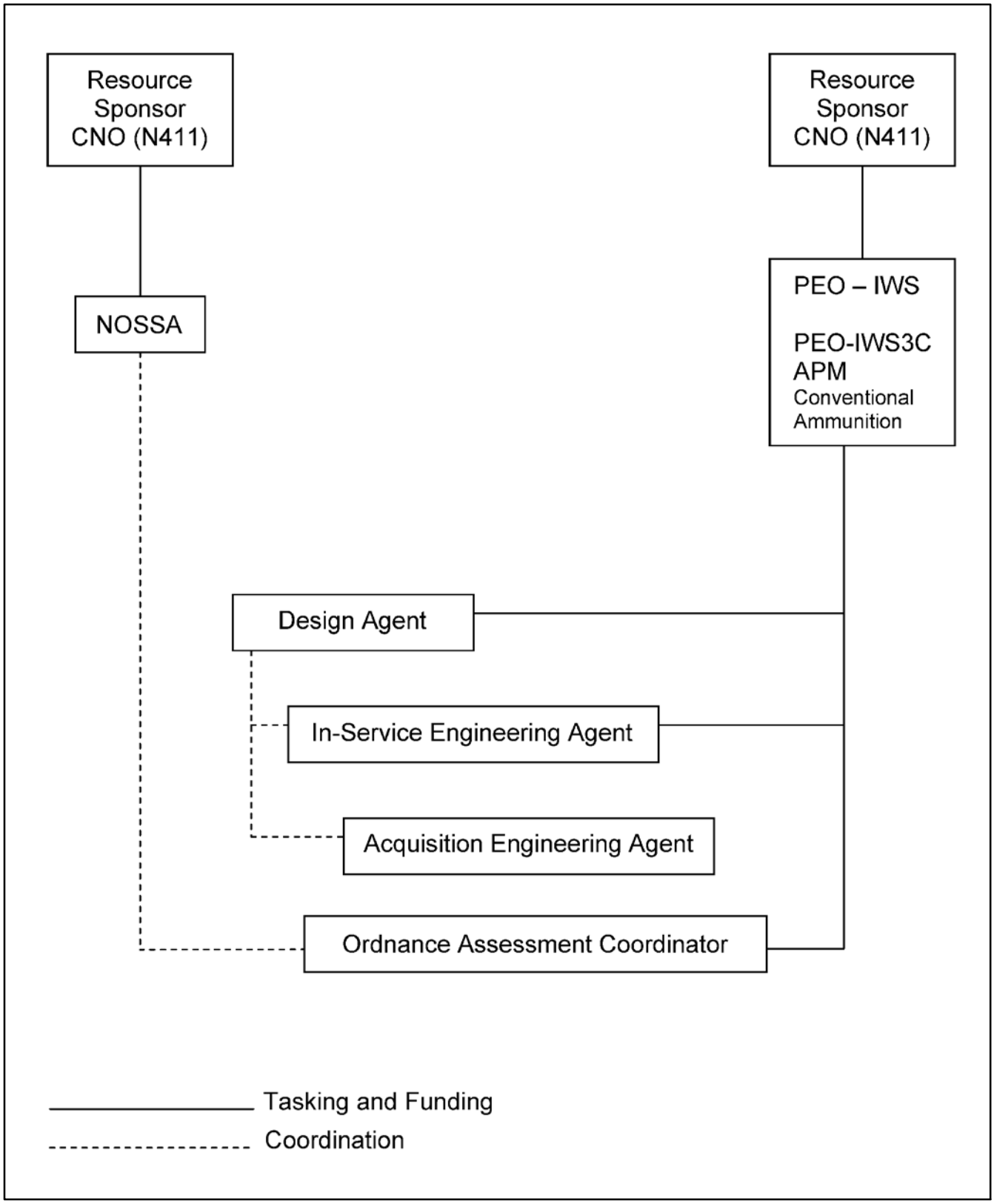

Figure 10-1-1. In-Service Engineering Organizational Relationships

10.1.2.2 Acquisition Engineering Agent. The AEA is the primary engineering activity for ammunition post Milestone C (Approval for Full Production (AFP)). General responsibilities include identifying and controlling ammunition item configuration, and maintaining safety and quality during production. AEAs provide configuration control and production engineering support for manufacturing, loading, and assembly.

10.1.2.3 In-Service Engineering Agent. After entry of the ammunition item into the active inventory, the AEA normally becomes the ISEA, continuing the AEA responsibilities identified in Paragraph 9.2.2.2 for any further procurements.

a. The ISEA takes on the following responsibilities for the assets in inventory:

(1) Monitor activity work performance relative to technical documentation, productivity, and cost for all in-service functions.

(2) Maintenance Planning and Execution.

(a) Prepare and update the 5 year Depot Maintenance Plan. Determines asset readiness postures and provides maintenance priorities for maintenance processing of assigned ammunition items.

(b) Provides engineering and technical support to activities engaged in maintenance of assigned ammunition items.

(c) Coordinate with Naval Supply Systems Command Global Logistics Support (NAVSUP GLS AMMO) to have maintenance assets moved to the appropriate maintenance activity.

(d) Provide technical documentation necessary to support the items on the maintenance plan, e.g. Depot Maintenance Work Requirements (DMWRs) and Automated Data Lists (ADLs).

(e) Approve all lots of ammunition prior to maintenance or modification at Navy and Single Manager for Conventional Ammunition (SMCA) activities.

(f) Perform maintenance line assessments and certifications as required.

(g) Provide in-process engineering support as necessary.

(h) Monitor maintenance activity work performance relative to technical documentation, productivity, and cost.

(i) Monitor activity compliance with Naval Sea (NAVSEA) safety policies for maintenance operations involving explosives and other hazardous material.

(3) SMCA Interface.

(a) Coordinate 2T Cognizance (COG) maintenance needs with the SMCA. Provide necessary inter-service maintenance exhibits to the SMCA and participate in all applicable workload/maintenance meetings.

(b) Represent NAVSEA on the Joint Ordnance Commanders Group (JOCG) Maintenance subgroup.

(4) Ordnance Assessment (OA).

(a) Maintain liaison with the NAVSEA OA coordinator, test agent and test activities.

(b) Provide technical documentation and logistical information necessary to support the 2T COG ammunition OA efforts.

(c) Assist OA coordinator and agents in creating and maintaining rationale sheets for each OA candidate on the OA list.

(d) Review OA test plans and reports and make recommendations for corrective actions to Program Executive Officer Integrated Warfare System, Naval Gunnery Project Office (PEO IWS3C)/PM Navy 2T Conventional Ammunition Systems (NCAS).

(e) Document baseline OA parameter requirements (e.g. parameters that degrade with time or environmental exposure) in coordination with the OA coordinator, OA agents, and with the DA/AEA.

(f) Ensure baseline OA requirements are incorporated into end item procurement acceptance procedures in coordination with DA/AEA.

(g) Verify that every lot of 2T COG ammunition produced is assigned appropriate component stratum(s) and the test data (lot acceptance, Mobile Ammunition Evaluation and Reconditioning Unit (MAERU), and special test) is input into the centralized Surveillance Lot Acceptance and MAERU Test Database System (SLAMS) database. Work with OA coordinator and agents to program and maintain SLAMS to predict ammunition degradation trends, which will aid in developing product improvement programs, maintenance plans, ammunition classification, priorities for issue/use, and OA candidates.

(5) Technical Manuals and Configuration Management.

(a) Coordinate the maintenance/update of all 2T COG technical manuals and provide technical support in accordance NAVSEAINST 4160.3 series, Technical Manual Management Program.

(b) Provide updates to NAVSUP P-805/7 to ensure 2T COG ammunition can be properly supported during the Receipt, Segregation, Storage and Issue (RSS&I) process.

(c) Maintain configuration identification and control of all in-service assets by reviewing and documenting deviations, surveillance reports, quality deficiency reports, maintenance data cards and Standard Operating Procedures (SOPs).

(6) For Ammunition Malfunctions reported by a Conventional Ordnance Deficiency Report (CODR)/Explosive Mishap Report (EMR).

(a) Coordinate analysis with engineering agents (DA, AEA, System Integration Agent (SIA), OA) on all reported incidents.

(b) Provide PEO IWS3C/PM NCAS with a written assessment of all reported ammunition related incidents.

(c) Assist PEO IWS3C/PM NCAS in the coordination of any formal investigation of Fleet malfunctions as well as the implementation of corrective actions identified as a result of the malfunction investigations or incident assessments.

(d) Maintain an automated historical database for all CODR/Explosive Mishap Report (EMR), mishaps, malfunction investigations and related correspondence.

(e) Review all other available reports (e.g. CASREPs (Casualty Reports), firing exercise reports, quality deficiency reports, ordnance assessment reports, etc.) for ammunition design, production or maintenance related problems and initiate corrective action with the DA/AEA and PM NCAS.

(7) Notice of Ammunition Reclassification (NAR)/Over Head Fire (OHF)/Ammunition Information Notice (AIN) support.

(a) Review all available data and make serviceability recommendations to support the issuance of NARs and OHF restrictions.

(b) Review all AINs issued by other Services or prepared by other engineering agents for applicability to 2T COG ammunition and provide recommendations to PEO IWS3C/PM NCAS. Prepare potential AINs for program office review when necessary.

(8) Perform ammunition management on the current in-service inventory to identify assets that should be priority issue and to assure proper classification of all in-service assets.

(9) Provide analytical support of requirements computations and inventory data, and assist PEO IWS3C/PM NCAS in the annual Stratification and Cross-leveling programs including economic retention analysis.

(10) Analyze and provide recommendations on the service allowances (30,000 series) for 2T COG ammunition used by all Navy ships and units worldwide.

(11) Consolidate the Non-Combat Expenditure Requirements (NCER) for the Naval Sea Systems Command (NAVSEASYSCOM) major claimant for PEO IWS3C/PM NCAS submission; allocate the Non-Combat Expenditure Allocations, monitor expenditures for all sub-claimants and report major deviations to PEO IWS3C/PM NCAS. Assist PEO IWS3C/PM NCAS with analysis of asset availability in support of the NCER Office of the Chief of Naval Operations (CNO) (OPNAV) Sponsor Review on 2T COG ammunition.

10.1.2.4 Ordnance Assessment Coordinator. The OAC provides a system focus for the OA Program. The OAC functions at the weapon system or family level to plan, coordinate, and oversee OA for assigned systems.

CHAPTER 10.2

Mobile Ammunition Evaluation and Reconditioning Unit

Table of Contents

Paragraph	Subject	Page
10.2.1	General	10-2-1
10.2.2	Responsibilities	10-2-1
10.2.3	Personnel Composition	10-2-3
10.2.4	Equipment	10-2-4
10.2.5	Deployment	10-2-4

CHAPTER 10.2

Mobile Ammunition Evaluation and Reconditioning Unit

10.2.1 General.

10.2.1.1 Background. In the past, serviceability of ammunition stocks at overseas locations was determined by visual inspection, sampling, and return of samples to the Continental United States (CONUS) for evaluation. Ammunition classified unserviceable as a result of inspection or evaluation was replaced and returned for maintenance. The length of time in a Non Ready For Issue (NRFI) status pending evaluation or replacement, and the handling and transportation costs for return and maintenance, were excessive.

10.2.1.2 Purpose. The purpose of the MAERU is to reduce or eliminate the time lag between sampling and recertification as RFI, and reduce transportation and handling charges. MAERUs are formulated with the capability of performing in-place evaluation and on-site maintenance. MAERU services are available to area and storage site Commanders on a routine basis, or as specifically requested. They may be for separate evaluation or for combined evaluation and maintenance actions. MAERU operations are carried out with minimum disruption of the daily activities of the storage sites. They result in RFI certification of the entire storage site stockpile, less items that require D-level maintenance, which is beyond the MAERU capabilities, or are irreparable. MAERU services are also available, on a selective and reimbursable basis, for the evaluation and maintenance of similar munitions of U.S. origin in the possession of foreign Navies.

10.2.1.3 Schedule. MAERU teams shall visit the major Outside the Continental United States (OCONUS) pre-position sites on a three-year cycle. The sites are classified by regional location. Sites are in the Mediterranean, Pacific and the Caribbean theaters.

10.2.2 Responsibilities.

10.2.2.1 Acquisition Program Manager (APM) (PEO IWS3C) PM NCAS, NSWC, Picatinny Detachment, Indian Head Division.

a. Provides overall program guidance and policy direction for all phases of MAERU operations.

b. Approves three-year program plans and initiating budgeting submissions.

c. Exercises overall technical control of 2T COG ammunition maintenance (NSWC Division, Crane, Code JX exercises technical control of 2E COG items in coordination with Naval Air Systems Command (NAVAIR) and cognizant maintenance engineering activities. OT COG items are coordinated with Marine Corps Systems Command (MARCORSYSCOM) PM, Ammunition and Expeditionary System Evaluation Division Fallbrook, CA).

d. Provides the financial support required to administer, maintain, and operate the MAERU.

e. Issues work requests to NSWC Crane Detachment Fallbrook, CA for MAERU operations and for overall administrative and logistics requirements.

f. Monitors, with ISEA and OA support, overall MAERU operations for the purpose of ensuring effective and efficient operation at overseas stocking points.

10.2.2.2 Naval Ordnance Safety and Security Activity (NOSSA). NOSSA, Indian Head, MD is responsible for providing overall guidance with respect to explosives safety.

10.2.2.3 NSWC Division, Crane Detachment, Fallbrook, CA.

a. Provides administrative, logistic, and technical direction to the MAERU.

b. Submits a three-year program plan for MAERU operations to the PM six months prior to the beginning of each fiscal year. The plan must provide for operations including travel, per diem and overtime, components, equipment, tools, consumable supplies, and material requirements for MAERU operations.

c. Determines the need for scheduling and accomplishing pre-evaluation surveys. The survey will be preceded by obtaining lot-by-lot inventories of ammunition, and related components. The survey includes coordinating the planned effort with the Fleet logistics managers and the commands at the overseas storage locations. As a result of pre-evaluation surveys and associated surveillance studies, NSWC Division, Crane Detachment Fallbrook determines the most feasible schedule and methods of evaluation and maintenance. Specific sampling plan is developed for each ammunition item to be evaluated and processed through a maintenance line.

d. Conducts an audit to ensure that work has been completed satisfactorily, adjustments have been made to the activity asset records, and the activity has all necessary data to submit inventory changes or adjustments.

e. Prepares and publishes a detailed summary for each activity. This lists the inspections and test results, maintenance actions accomplished, estimates of overall quality, information regarding inventory adjustments resulting from MAERU actions, evidence of deterioration, and recommendations for future MAERU actions. The summary is submitted to the appropriate Fleet logistics manager and PM within 90 days following the completion of the MAERU operations and audit.

10.2.2.4 Fleet Logistics Managers.

a. Forward requests for MAERU service to the PM.

b. Assist NSWC Division Crane Det Fallbrook in establishing a schedule which will be compatible with storage activities and MAERU requirements.

c. Ensure that adequate logistics support services such as material handling, local transportation, equipment, maintenance facilities, and labor are available at each of the storage activities.

d. Ensure that the storage activities have completed action on the inventory adjustments which result from the MAERU actions.

10.2.2.5 Overseas Storage Activities.

a. Report ammunition assets, receipts and expenditures in accordance with current instructions. Provide NSWC Division Crane Det Fallbrook with a lot-by-lot inventory by storage location, date of receipt, and source, when requested.

b. Provide logistics support services such as material handling, local transportation, equipment, maintenance facilities, and labor required for MAERU operations, and provide for temporary storage of MAERU equipment and supplies prior to and following the MAERU deployment.

c. Request disposition instructions for Navy-owned material found to be unserviceable as a result of MAERU ordnance assessment, and which is not repairable by MAERU. U.S. Marine Corps (USMC) PM for Ammunition will provide disposition instructions for OT COG items.

d. Reflect Condition Code (CC) and inventory adjustments in station records occurring as a result of MAERU operations.

10.2.3 Personnel Composition.

10.2.3.1 Team Composition. A MAERU, headed by a Technician-in-Charge (TIC), can consist of two teams. One team consisting of ordnance assessment specialists. The other team consisting of ordnance workers. Test equipment and ammunition peculiar equipment for disassembly and assembly accompanies the two teams as required.

10.2.3.2 Personnel Roster. NSWC Division Crane Det Fallbrook maintains a roster of designated and eligible personnel available for duty with the MAERU. This includes personnel qualified for duty as TIC and Senior Ordnance Assessment Technician (Senior OAT). Selection of personnel from other activities is subject to the concurrence of the employee's home station, unless such duty is a condition of employment. TICs are usually ordnance assessment oriented personnel.

10.2.3.3 Technician-in-Charge. A TIC, as an official representative of the Commanding Officer, NSWC Division Crane Det Fallbrook, is in charge of the evaluation and maintenance (reconditioning) phases of the MAERU operation. In the event that only the ordnance assessment team is deployed, the Senior OAT shall assume the listed duties of the TIC.

a. Refers directly to NSWC Division Crane, Det Fallbrook any operational or personnel matters, which cannot be resolved on-site by the TIC.

b. Takes necessary precautions and mandatory measures to ensure that MAERU personnel are properly instructed and informed of the policies and regulations regarding security, restrictions, and curtailment of off station activities applicable to noncitizens of the host country.

c. Submits requests relating to ordnance assessment, maintenance equipment, and materials requirements to NSWC Division Crane, Det Fallbrook.

d. Provides NSWC Division Crane Det Fallbrook the storage site commander, and the Fleet logistics commander with reports of work progress in MAERU operations when units are active. These letter or memo progress reports will adequately describe all action taken or contemplated by the MAERU in preparing and planning the schedules of operation, assembly, status of work completed, and estimated date of completion of MAERU operations.

e. Takes such steps as may be necessary to ensure the acceptable quality of reconditioned ammunition items.

f. The TIC is responsible for an in/out brief with the activity Commander/Ordnance Officer and an out brief with the area Commander.

10.2.4 Equipment.

10.2.4.1 Containers. Each set of equipment is contained in two standard commercial ocean-going cargo containers. One container is outfitted with test and evaluation equipment. The other has maintenance equipment. Personnel and equipment associated with each team are capable of independent operation. When the MAERU operations are complete, the team moves to a new operation site or returns to Fallbrook.

10.2.4.2 Container Rotation. Two complete sets of MAERU equipped containers exist. On completion of a deployment, the containers are returned to NSWC Division Crane Det Fallbrook for replacement of supplies and reconditioning or upgrading as necessary, and the standby set is deployed. The standby set is available on-call for emergency deployment.

10.2.5 Deployment.

10.2.5.1 Inventory Request. In preparation for a routine deployment, NSWC Division Crane Det Fallbrook requests a lot-by-lot inventory from each storage activity. Activities with a low turnover rate of ammunition may be contacted six to nine months in advance of projected deployment. Activities with a high turnover rate are contacted 30 to 60 days prior to deployment to ensure that inventories are current.

10.2.5.2 Pre-evaluation Survey and Planning Visit. A pre-evaluation survey and planning visit is made to each storage site to accomplish the following. The planning can be coordinated via email.

a. Coordinate the forthcoming MAERU operations at each site.

b. Determine and arrive at an agreed to schedule for each activity and for the cycle.

c. Verify significant inventory changes from the previous deployment and discuss major rework requirements.

d. Arrange for support of the MAERU at each activity by local handling personnel, material handling equipment, transportation, work area or facility, and supplies.

10.2.5.3 Team Preparation. Upon receipt of a current year Work Request from the PM for MAERU support, NSWC Division Crane Det Fallbrook accomplishes the following:

a. Determines the team member requirement.

b. An indoctrination briefing for all the team members assigned to MAERU operations with respect to responsibilities in foreign countries is conducted. Team members are thoroughly briefed prior to departure on matters pertaining to existing local and political conditions at overseas facilities.

c. Develops a schedule of visits and operational plans for each storage location based on the verified inventory and the survey findings and agreements.

d. Arranges personnel travel itineraries and the shipment of the MAERU containers.

10.2.5.4 Operation Commencement. When the MAERU containers arrive, the site commander arranges to move the units to the designated work area. Once the operation begins, the TIC is responsible for the following.

a. Scheduling the various functions such as sampling inspection, testing, maintenance, and repackaging to keep an even work flow.

b. Completion of the documentation as lots are reworked, including data card preparation and DD Form 1500 material condition code Tag application.

c. Preparation of a summary report upon completion of the operation at each site.

10.2.5.5 Final Report. The cycle is completed with the issuance of a final report to each overseas storage activity and the appropriate Fleet logistics managers. This is a detailed summary of the results of the MAERU operations including estimates of overall reliability by ammunition type, summarized test results, maintenance actions accomplished, and recommendations to adjust future MAERU testing frequency based upon evidence of changing deterioration trends.

CHAPTER 10.3

Mishaps and Non-Nuclear Ordnance Discrepancies

Table of Contents

Paragraph	Subject	Page
10.3.1	Deficiency Reporting	10-3-1
10.3.2	Explosive Mishaps	10-3-1
10.3.3	Malfunction Investigations	10-3-6
10.3.4	Notice of Ammunition Reclassification System	10-3-12
10.3.5	Transportation Discrepancy Report	10-3-13
10.3.6	Supply Discrepancy Report	10-3-15
10.3.7	Financial Liability Investigation of Property Loss Report	10-3-15
10.3.8	Causative Research	10-3-15
10.3.9	Missing, Lost, Stolen, or Recovered Report	10-3-16

CHAPTER 10.3

Mishaps and Non-Nuclear Ordnance Discrepancies

10.3.1 Deficiency Reporting.

10.3.1.1 General. There are many types of reports in non-nuclear ordnance management. These range from a report of loss of life and property damage resulting from an explosive accident, to a Report of Discrepancy involving shipping-type item (issue) and packaging discrepancies, to a Missing, Lost, Stolen, or Recovered (MLSR) report resulting from an inventory discrepancy. Refer to Chapter 4.6 of this manual for detailed information.

10.3.2 Explosive Mishaps.

10.3.2.1 Scope.

a. OPNAVINST 5102.1 series is the single policy directive for mishap and safety investigation reporting and record keeping by all Navy and Marine Corps commands, activities, units, installations and facilities. A "Mishap" is any unplanned or unexpected event causing death, injury, occupational illness, including days away from work, job transfer or restriction, and material loss or damage. All recordable mishaps are to be reported electronically to Commander, Naval Safety Center (COMNAVSAFECEN). COMNAVSAFECEN will be contacted within eight hours by telephone or electronic means of all Navy or Marine Corps ordnance related Class A explosive mishaps. Electronic reports to COMNAVSAFECEN are to be made via the Web-Enabled Safety System (WESS). WESS is a web (World Wide Web - www) based safety mishap data collection and reporting system that provides a real-time data entry and retrieval system with 20 years of data in a consolidated database. The Uniform Resource Locator (URL) address for WESS is http://www.safetycenter.navy.mil/wess/default.htm.

b. DOD 5160.65-M specifies uniform policies and procedures for inter-service notification and reporting of ammunition malfunctions.

10.3.2.2 Explosive Mishap Categories.

a. Explosive Mishap Report. An accident or incident involving conventional ordnance, ammunition, explosives, explosive systems and devices resulting in an unintentional detonation, firing, deflagration, burning, launching of ordnance material (including all ordnance impacting off-range), leaking or spilled propellant fuels and oxidizers (less OTTO fuel II), or chemical agent release is an explosive mishap. Accidents and incidents defined as explosive mishaps and meeting a severity classification of class A, B or C, will be reported as an EMR in accordance with OPNAVINST 5102.1 using WESS, even if an ordnance system works as designed, and human error contributed to an incident or accident. Any explosive event not meeting one of these severity classifications will be reported as an Explosive Event Report (EER).

(1) Mishap Severity Classifications:

(a) Class A Mishap. The resulting total cost of reportable damage is $1 million or more or an injury and/or occupational illness results in a fatality or permanent total disability.

(b) Class B Mishap. The resulting total cost of reportable property damage is $200,000.00 or more, but less than $1 million. An injury and/or occupational illness results in permanent partial disability; or when three or more personnel are hospitalized for inpatient care (which, for accident reporting purposes only, does not include just observation and/or diagnostic care) as a result of a single accident.

(c) Class C Mishap. The resulting total cost of property damage is $20,000.00 or more, but less than $200,000.00; a nonfatal injury that causes any loss of time from work beyond the day or shift on which it occurred; or a nonfatal occupational illness or injury that causes loss of time away from work or disability at any time.

b. Explosive Event Report. Any event involving conventional ordnance, ammunition, explosives, explosive systems and devices resulting in an unintentional detonation, firing, deflagration, burning launching of ordnance material (including all ordnance impacting off-range), leaking or spilled propellant fuels and oxidizers (less OTTO fuel II), or chemical agent release, explosive events will be reported in an EER in accordance with OPNAVINST 8000.16 series, Volume I, Chapter 4.6. Even if an ordnance system works as designed, and human error contributed to an event. This pertains to all events that do not meet the severity classification of a Class A, B or C Mishap previously described. Refer to Chapter 4.6 of this manual for detailed information.

c. Conventional Ordnance Deficiency Report. A CODR incident is where ordnance or weapon systems fail to function in accordance with the designed and/or intent of the system and results in no property damage or injury. This includes improper storage, explosives, ammunition, explosive systems, or devices, including weapon systems components that come in direct contact with the ordnance (e.g. ammunition, explosives, missiles) and armament, handling, support equipment used to fire, handle, load, deliver, store or transport ordnance. Refer to Chapter 4.6 of this manual for detailed information.

10.3.2.3 Explosive Mishap Occurrences. Explosive mishaps may occur as a result of:

a. Some external force during processing in the logistic cycle such as impact or friction,

b. Some external phenomena such as fire, flooding, lightning, electrostatic discharge etc. while in storage, or

c. Expenditure (intended or accidental).

d. Mishap occurrences may be categorized as follows:

(1) Support Operations Mishaps. An event involving ordnance, explosives, or chemical agents that results in an explosion, release of chemical agent, or damage to the explosive item being processed during manufacturing, loading, assembling, disassembling, demilitarizing, handling, transport operations, or while in storage. Included are “near-mishap” events that, except for chance, would have resulted in an explosive mishap.

(2) Mishaps During Planned Expenditure. A deliberate actuation, release, or launching in combat, or noncombat expenditure of ordnance which fails to function in the designed manner. Examples include in-bore explosions, close-aboard premature, hangfires, down range premature, misfires, or duds.

(3) Unplanned Functioning Mishaps. An accidental or inadvertent actuation, release, or launching of ordnance which, when armed, functions as designed irrespective of casualty or

damage, or when unarmed becomes a potential hazard in friendly territory or in-shore waters. Included is the deliberate emergency jettisoning of ordnance in friendly territory.

(4) Hazardous Conditions Potential Mishaps. Any defect or condition found in an ordnance item or component on visual examination or local test which might result in an explosive mishap. The following are included in this category.

(a) The recovery of jettisoned, abandoned, or lost ordnance items or explosives in public areas which, if found by untrained civilian or military personnel, represent a potential explosive hazard.

(b) The recovery of ordnance or explosive material of known or undetermined hazard in the possession of the private sector by Explosive Ordnance Disposal (EOD) personnel.

(c) The emergency disposal by EOD personnel of dangerous military explosive items recovered anywhere in friendly territory.

(d) The observation of a near mishap, an unnatural occurrence, or the unauthorized alteration or misuse of ordnance, which has the potential for casualty or damage during the alteration process or upon ultimate use.

10.3.2.4 Accident Responsibilities (On Station or Aboard Ship). It is the responsibility of the activity or command experiencing the mishap to conduct a local investigation and report all reportable explosive mishaps, in accordance with OPNAVINST 5102.1 series or OPNAVINST 8000.16 series. Information gathered by the local investigation is required for the reporting elements contained in appendix B of OPNAVINST 5102.1. In addition, the local investigation is the first step in determining the basic cause of a mishap and in formulating local corrective action. In many cases sufficient evidence may be available in the mishap report to arrive at a determination and to direct corrective action that may be required.

10.3.2.5 Accident Responsibilities (Off-Station). Mishaps occurring during off-station shipment of ordnance by commercial or government carrier are of major concern to the Navy as to public safety, particularly in the case of train wreck or truck accidents where ordnance cargo is damaged or scattered outside the rail car or truck trailer, and for assessment of damage to the ordnance cargo and determination of commercial carrier liability.

a. NAVSEAINST 8020.18 series is the Navy's governing instruction for transportation accident prevention and emergency response involving Department of Defense (DOD) ordnance. The instruction outlines preventive measures, emergency response action responsibilities, and important contact phone numbers for the Army Operations Center (AOC) and other sources of assistance. The NAVSEAINST specifies accident reporting information to be included on each Bill of Lading, SF 1103, accompanying a shipment of DOD ordnance. This information provides local authorities with all of the information required to properly notify DOD in the event of an explosive mishap on public roadways.

b. Unless otherwise directed by Office of the Secretary of Defense (OSD), the Navy will decide on the need to perform safety investigations of transportation accidents involving its shipments. Investigations for future accident prevention purposes are encouraged. Duplication of effort by the National Transportation Safety Board (NTSB) and DOD component should be avoided. The Navy will cooperate with NTSB investigations.

c. Completed investigation reports will be forwarded to the OSD Safety and Occupational Health Policy Directorate with an additional copy furnished to the DOD Explosive Safety Board (DDESB) and the Surface Deployment and Distribution Command (SDDC).

d. Determination of damage, internal as well as external, and the assessment of repairs to return the ordnance items to serviceable condition are the responsibility of certified personnel at the ordnance activity receiving the ordnance involved in the accident.

10.3.2.6 Support Operation Mishap Corrective Action Responsibilities.

a. Mishaps during manufacturing, loading, assembly, disassembly, maintenance, or demilitarization are generally attributable to noncompliance with safety precautions or prescribed operating procedures, equipment failure or defective equipment, or unknown causes.

(1) Local commands are to instruct and train or retrain personnel in operating procedures and safety precautions, and to initiate a program of closer supervision, for mishaps attributed to personnel error. For major mishaps, the PM is responsible for the review and revision, if appropriate, of any technical related documents and safety precautions for all operations of this type. Recommended changes to safety precautions should be forwarded to all applicable commands/activities.

(2) When the cause of a mishap is attributed to equipment failure or defective equipment, the local command is to review equipment inspection and maintenance programs for greater emphasis on preventive maintenance, and request assistance in equipment redesign/modification if appropriate.

(3) When personnel error and equipment malfunction or failure is eliminated, the explosive item in process must be considered as suspect and the exact failure mode reported as unknown. Depending on the severity of damage and injuries, the item process should be discontinued.

b. Mishaps occurring during ordnance handling or transportation, whether associated with in-process operations, receipt, issue, restowage operations, or transfers at sea are generally caused by equipment failure, defective equipment, or personnel error (noncompliance with safety precautions or prescribed equipment operating instructions).

(1) When local investigations indicate personnel error, local commands shall initiate a corrective program of training and instructions in explosive safety, non-nuclear ordnance transporting, and handling equipment operations. Naval Supply Systems Command Global Logistics Support (NAVSUP GLS AMMO) and NWSC Indian Head Division Detachment Earle are responsible for changes to safety precautions and operating procedures for transporting and handling ordnance.

(2) Mishaps attributed to defective equipment or equipment failure during handling or transportation are generally avoidable by local preventive maintenance and inspection programs.

10.3.2.7 Hazardous Condition, Potential Mishaps Corrective Action Responsibilities. Report all mishaps in accordance with OPNAVINST 5102.1 series.

a. Damaged non-nuclear ordnance discovered during stowage, OA, or receipt inspection is generally the result of rough handling or a prior unreported mishap. Local commands should perform the following actions:

(1) Instruct all station personnel in the necessity for mishap avoidance and for reporting to supervisors all mishaps of damage or rough handling as they occur.

(2) Report all transportation-type discrepancies (i.e., shortages, losses, or damage occurring in transit) found during receipt inspection in accordance with NAVSUPINST 4610.33 on a Transportation Discrepancy Report (TDR) SF 361. If loss appears to be from theft, follow MLSR procedures as described in Paragraph 10.3.9.

(3) Set damaged ordnance aside for inspection and classification by ordnance assessment personnel.

b. Non-nuclear ordnance damaged by flooding (e.g., actuation of magazine sprinkler systems afloat) should lead to an inspection for the presence of water in ordnance containers, in cartridge and propelling charge tanks, and under waterproof protective caps of projectiles. The mishap report should include details on quantities showing evidence of water damage. Suspect ordnance should be tagged indicating the reason for reclassification and returned to an ordnance activity ashore at the first opportunity.

c. Defective ordnance discovered during stowage; surveillance; preparation of subassemblies and components for new production, assembly, or loading; or during preparation/disassembly of rounds for maintenance are usually the result of faulty manufacture or prior maintenance operations. Defects, such as missing gas check seals or protruding primers, may be prevalent in other rounds of the ammunition lot or lot stratum and should be reported by message.

d. Ordnance found on private property or in the custody of private individuals has a potential for catastrophic or major mishaps in the hands of untrained civilian personnel. EOD personnel accepting custody of such ordnance should determine, if possible, how it was obtained, where it was found, and other information reported in accordance with OPNAVINST 5102.1.

10.3.2.8 Unplanned Functioning Mishaps Corrective Action Responsibilities.

a. Unplanned functioning mishaps are generally caused by dropping or striking a device containing a percussion primer, snagging a firing lanyard or cotter-pin pull-ring, or emergency conditions requiring the deliberate jettisoning of ordnance.

b. Local commands conduct investigations, review local and published safety precautions, provide instruction or training emphasizing safe operating procedures, and report findings in accordance with OPNAVINST 5102.1. Jettisoned ordnance should be reported if it occurs in friendly territory or in-shore waters with the possibility of its recovery by the private sector.

10.3.2.9 Planned Expenditure Mishaps Corrective Action Responsibilities.

a. Planned expenditures, in combat or noncombat operations, are considered as beginning with the placement of an ordnance item into a weapon or launcher with intentions to fire or launch the item. For automatic loading weapon systems, this includes the placement of the ordnance item in the loading/firing cycle. Naval ordnance is designed to safely and reliably negotiate cycling, ramming, chambering, or launcher loading, firing, launching, and effective performance on target. In some cases this includes case extraction and return of weapon to battery for maintaining a required rate of fire. Mishaps occurring during expenditure are attributable to one or more of ordnance and weapon system interface incompatibilities, defective ordnance, defective weapon system or equipment, or personnel error (noncompliance with safety precautions or prescribed operating procedures).

b. Mishaps are primarily due to the effects of external forces on an ordnance item during its life cycle from production through release for expenditure. These forces or effects are varied,

unpredictable, and generally not repetitive. Planned expenditure mishaps are more likely to be repetitive, given the same ordnance item and weapon system configuration and the same set of conditions. Repetitive major mishaps which result in lot or lot strata suspensions can result in a serious reduction in Fleet readiness. Intensive investigations and rapid response corrective actions are the general rule for major mishaps occurring during expenditures.

(1) All activities engaged in combat or noncombat expenditure of non-nuclear ordnance experiencing mishaps or malfunctions should discontinue the use of the item, pending local investigation and assessment of probable causes.

(2) When local investigation indicates an obvious cause for a minor mishap, such as failure to set point detonating fuzes to "on" (personnel error), local corrective action is considered sufficient grounds for resumption of use.

(3) For all other mishaps where ordnance fails to function in the manner for which designed and local investigation does not indicate a probable cause, reports shall be submitted as required by OPNAVINST 5102.1. Depending on the degree of actual or potential casualties and damage, and operational necessity (combat), usage may be resumed shifting to other ammunition lots or ordnance types if possible.

(4) Because explosive accidents and major malfunctions are usually characterized by the destruction or loss of the offending item, the difficulty in positive determination of cause is magnified. All fragments and remains of the item should be collected for examination and tests. Photographs of damages are desirable. Instances have been noted where minor malfunctions or incidents have resulted in the unnecessary disposal of the item. In most cases, the hazard associated with an incident or minor malfunction is at the instant of occurrence or immediately thereafter. After an approved interval, an item sustaining a minor mishap should be tagged, set aside, and returned to the nearest issuing activity ashore for investigation tests or other disposition as may be directed by the PM through the Insensitive Munitions (IM). Nothing in the above is to be construed as prohibiting the immediate disposal of an item that in the opinion of the commanding officer is considered to constitute an imminent hazard.

10.3.3 Malfunction Investigations.

10.3.3.1 General.

a. Every explosive mishap requires a malfunction investigation. The majority of explosive mishaps occurring in the Navy are of the magnitude and circumstances that only require a local investigation to determine the cause and appropriate corrective action as described within Paragraph 10.3.2 with reports submitted to the appropriate authorities specified in OPNAV instructions.

b. Some explosive mishaps will have formal malfunction investigations assigned requiring involvement by external management and engineering activities.

c. The Joint Ordnance Commanders Group (JOCG) Joint Conventional Ammunition Policies and Procedures (JCAPPs) have been approved by the Office of the Under Secretary of Defense (Acquisition, Technology and Logistics) as an alternative to the corresponding chapters of the DOD 5160.65-M, Single Manager for Conventional Ammunition (Implementing Joint Conventional Ammunition Policies and Procedures). JCAPP, titled SAFETY, discusses responsibilities and procedures for malfunction investigations and reporting.

10.3.3.2 Investigation Team. The severity of the mishap, the ordnance/weapons system involved, and the location of the mishap determines which command directs the investigation and which commands will provide representatives on the investigation team. The investigation responsibilities are basically the same regardless of who assigns them and to whom they are assigned. Typically, the tasks should include:

a. Alerting other users that a mishap has occurred.

b. Preventing further use of like items until a determination as to the cause of the mishap has been made.

c. If needed, conduct an investigation to determine the causative factors of the mishap.

d. Informing all concerned of the determination.

e. Release of the items for use, maintenance or demilitarization.

10.3.3.3 Emergency Reaction Plan for Catastrophic Explosive Mishaps. Explosive mishaps resulting in fatalities, severe injuries, or equipment damage mandate immediate action to preclude a recurrence under the same or similar circumstances. The following steps are critical to preventing a recurrence.

10.3.3.4 Immediate Action.

a. Evaluate message report for:

(1) Description of occurrence.

(2) Accuracy of round(s) identification (projectile, propelling charge, fuze, and any other pertinent items).

(3) Accuracy of all lot numbers (can be found by checking ammunition data files).

(4) Any other information that can be verified.

b. Inform PEO IWS3C/PM NCAS and NOSSA.

(1) PEO IWS3C performs an assessment of the world wide inventory.

c. Telephone request to NAVSUP GLS AMMO, Mechanicsburg, PA followed up by 2T COG ammunition malfunction database Research Sheet to issue NAR suspending involved ammunition lots to condition code J. Send information copies of the NAR message to all addresses of original message.

(1) In the event that PEO IWS3C/PM NCAS is unavailable to carry out the requirements of Step c above the ISEA shall carry out the requirements.

(2) In the event that PEO IWS3C/PM NCAS and ISEA are unavailable to carry out the requirement of Step c above, NAVSUP GLS AMMO Mechanicsburg, PA shall execute the requirements. NAVSUP GLS AMMO Mechanicsburg, PA shall make every effort to ensure that the NAR is being issued on a valid lot number.

d. Send immediate message to ship or activity, Fleet Commander, Type Commander (copy to CNO), PEO IWS3C/PM NCAS and NOSSA advising or requesting the following:

(1) Request all fragments and residual material be retained for analysis and investigation.

(2) Request all onboard suspect ammunition be offloaded at the first opportunity and held for investigation.

(3) Request any other information which could be applicable to the investigation.

(4) Request confirmation of previously reported lot information (only if there is any question or suspect of original data).

(5) That PEO IWS3C/PM NCAS is the action officer on all matters regarding the malfunction investigation and is forming a special technical investigation team.

e. Appoint members of the investigation team and assign a team leader or senior technical representative. Fleet support will be requested by telephone followed by message to provide personnel for meetings and deployment, if necessary. The initial meeting should occur within 24 hours.

10.3.3.5 Action.

a. Immediate action on receipt of a telephone report or email (from reporting activity or from a third party in the chain of command) will be taken, including the following.

(1) The PM will alert appropriate ISEAs, and/or DAs, by telephone or email, providing details and digital images as received and the Date-Time-Group (DTG) of the confirming mishap message or the message itself.

(2) The PM will alert NAVSUP GLS AMMO by telephone and, depending on the circumstances and adequacy of information, will direct the suspension of the lot or type of non-nuclear ordnance involved.

b. Priority action is taken as follows when a mishap message report is received.

(1) The PM, ISEAs, DAs, and the Ordnance Assessment Coordinator (OAC)/OAA evaluate accuracy of the ordnance identification as reported, including projectile, propelling charge, and components, in comparison with item configuration and lot data files. They identify lot strata parameters containing primary explosive components of the same lot, same component manufacturer, or same loading and assembly production run.

(2) On the day of evaluation completion, ISEAs, DAs and the OAC/OAA will provide the PM with the following information by telephone.

(a) Acknowledgment of mishap message report receipt (negative reports required).

(b) Results of the identification evaluation.

(c) Comments, additional information required, and primary suspected failure modes (based on similar past mishaps).

(d) If reported circumstances are unprecedented, identify by name and rank/grade the individual designated as an investigative team member.

c. The PM will do the following within 24 hours of a mishap message report receipt.

(1) Confirm prior telephone direction to NAVSUP GLS AMMO by establishing a 2T COG ammunition malfunction database Research Sheet confirming or amending lot or type originally suspended in accordance with ISEA, DA, and OAC/OAA identification evaluations.

d. The decision to deploy a team to the site will be dictated by severity or circumstances of the mishap, or by direct request from OPNAV, COMNAVSEASYSCOM, Fleet or Type Commander.

(1) Upon deciding to deploy a team to the site, the PM is responsible for the following.

(a) Sending a message to the ship or activity and the appropriate chain of command addressees, identifying all members, their Estimated Time of Arrival (ETA), and team support requirements.

(b) Providing required travel funding for investigation team members.

(c) Assembling the investigation team members for an initial meeting.

(2) If an on-site investigation team is not required, the PM will be responsible for the following.

(a) Assigning the investigation responsibilities to appropriate engineering and other support activities, and provide funding to participate in the investigation if required.

(b) Send a message to the ship or activity and the appropriate chain of command addressees, notifying them that the technical investigation will be conducted off-site.

10.3.3.6 Investigation Responsibilities. The following responsibilities will be carried out by the assigned activity and/or its representative on the deployed investigation team.

a. ISEA (NAVSURFWARCENDIV Crane Code JXMM).

(1) Evaluate initial reports of catastrophic occurrences as established in Paragraph 10.3.3.4.

(2) Review all mishap reports on assigned items and submit comments and recommendations to the PM on actions required.

(3) Upon establishment of a formal technical investigation i.e. Surface Ammunition Control (SAMC), by the PEO IWS3C PM NCAS Conventional Ammunition Program Office, coordinate the development of a Plan of Action and Milestones (POA&M) with the DA and/or AEA. Monitor and report progress made by the assigned DAs and OAC/OAAs and NAVSUP GLS AMMO support.

(4) Coordinate and lead on-site technical investigation with the reporting unit/activity, units Immediate Superior in Command (ISIC), DA, AEA or other engineering activities, e.g. gun systems, as appropriate.

(5) Coordinate with NAVSUP GLS AMMO Mechanicsburg and unit/activity in obtaining residual assets, samples, in order to conduct tests. Point of destination of sample quantities will be provided as part of the referral.

(6) Monitor DA and/or AEA performance against the POA&M and provide status to PEO IWS3C/PM NCAS.

(7) Review the final malfunction investigation report prepared by the assigned DA or AEA, providing endorsement, non-endorsement or additional recommendations to PEO IWS3C/PM NCAS, as appropriate.

(8) Provide monthly progress/status reports by the 5th working day of each month to PEO IWS3C/PM NCAS on all open and funded investigations. Reports will start at the receipt of funds and continue until completion of final malfunction investigation report.

b. Appointed DA(s) and AEA.

(1) Evaluate initial reports of catastrophic occurrences following guidelines in Paragraph 10.3.3.4.

(2) Review mishap/malfunction reports and provide recommendations to PEO IWS3C/PM NCAS or the ISEA as appropriate.

(3) When requested by the PEO IWS3C/PM NCAS or the ISEA, prepare POA&M for submission in sufficient time to meet the submission requirements outlined in message establishing the technical investigation.

(4) Fully cooperate with the ISEA, AEA, and other DAs when a formal technical investigation into causes is assigned by PEO IWS3C/PM NCAS.

(5) Recommend special tests and analysis appropriate to investigation to the ISEA via POA&M.

(6) Provide test sample and related item (e.g. weapon, fragments, etc.) to the ISEA.

(7) Notify the ISEA when test samples and related items are received.

(8) Schedule and manage tests as defined in the approved POA&M. If problems or excessive delays occur in executing POA&M, immediately inform PEO IWS3C/PM NCAS and the ISEA.

(9) Submit monthly progress/status report to the ISEA by the 3rd working day of the month. Monthly progress/status report shall include an updated milestone chart.

(10) Prepare final malfunction investigation report for submission to the ISEA for review.

c. OAC/OAA.

(1) Review mishap/malfunction reports and submit comments and recommendations on probable causes, reclassification actions, and investigation requirements. Submit comments within 24 hours by telephone for major mishap/malfunctions, and when appropriate for minor mishap/malfunctions.

(2) Provide immediate telephonic response to the PM on assigned catastrophic mishap emergency reaction plan action items.

(3) Schedule, perform, and report results of investigations and laboratory tests assigned by the PM or as contained in a malfunction investigation plan.

(4) Provide historical OA test and Fleet performance data to the PM or DA/ISEA as required.

d. NAVSUP GLS AMMO Mechanicsburg PA. As Inventory Control Point (ICP) for Navy conventional ammunition and in accordance with NAVSUP P-724 shall:

(1) Ensure PEO IWS3C/PM NCAS, ISEA, and DAs are aware of all mishaps reported per OPNAVINST 5102.1 series and OPNAVINST 8000.16 series.

(2) Issue NARs per NAVSUP P-724 to change condition code item under investigation as directed by PEO IWS3C/PM NCAS.

(3) Ensure that the Joint Munitions Command (JMC)/SMCA and other Service users of Navy non-nuclear ordnance, including countries supported by the Security Assistance Program (SAP), are addressed on NARs as appropriate. NARs are distributed in message format to Address Indicator Groups (AIG) 181, 7613, 11005, 11253, and 11480.

(4) Maintain a permanent record (NAVSUP P-801 - the NAR Manual) of all service-wide reclassifications.

(5) Arrange for the shipment of required test samples and related items with Military Standard Requisition and Issue Procedure (MILSTRIP) and shipping data for DA/OAC/OAA investigations as requested by the ISEA.

(6) Obtain inventories of reclassified items as required by the PM, ISEA, DAs, or the OAC/OAA.

(7) Develop, maintain, and manage an automated data processing system to track and cross reference all mishaps, AINs, NAR actions by DOD code, NAR number, SAMC number and lot number.

10.3.3.7 Message Addressees. The appropriate PM and NAVSUP GLS AMMO are required action addressees on all mishap/malfunction message reports. The determination to release the item to general usage, by direct response to the reporting activity or to reclassify it by NAR, is required in the normal response interval for a routine (five days) or a priority (24 hrs) action message. Information addressees with support responsibilities in this determination are to be guided by this policy.

10.3.3.8 Final Ammunition Disposition by the PM. From the evidence and circumstances in the mishap report, and findings and recommendations of the investigation report, the PM will determine one of the following.

a. Determine that issue and use of the item lot, lot strata, or type as serviceable condition code CC A material may continue. For this determination the PM will advise the reporting activity and all addressees that suspension from use is not warranted and that local usage may be resumed.

b. Determine that issue and use may continue, but with qualifications. The PM will direct NAVSUP GLS AMMO to reclassify the item lot, lot strata, or type to CC B, with qualifying notation, CC C, priority of issue, or CC N for issue and use in an emergency only.

c. Determine that issue and use may not continue under any circumstances. The PM will direct NAVSUP GLS AMMO to withdraw the item lot, lot strata, or type from issue and use permanently as CC H (unserviceable - condemned), CC P (unserviceable - for disposal after reclamation of required components), CC F (unserviceable - requires major maintenance including component replacement), or as CC E (unserviceable - requires 100 percent screening for defects).

10.3.3.9 ISEA Additional Responsibilities. In addition to specific malfunction investigation responsibilities, the ISEA (NAVSURFWARCENDIV Crane) is also responsible to the PM for the following:

a. Summarize investigations in a Malfunction Investigation Status Report to be published semi-annually or as directed by PEO IWS3C/PM NCAS.

b. Maintain an electronic or hard copy for all open and completed SAMC files for retrieval and further use.

10.3.4 Notice of Ammunition Reclassification System.

10.3.4.1 General. The degree of ordnance serviceability is defined for ordnance management by the assignment of material CCs. All newly produced/procured non-nuclear ordnance that is completely finished, tested, and legally accepted by the receiving activity, is assumed to be serviceable - CC A material. Over a period of time, environmental effects, damages sustained in handling, and deterioration due to aging result in changes in the degree of serviceability. Stock record changes to CCs can occur as a result of local reclassification or directed reclassification by the PM. Local reclassification becomes necessary when OA personnel inspect material in storage or received from other activities, or upon segregation of non-nuclear ordnance in an undetermined condition CC K, and determination is made that its original condition is no longer valid. Local reclassification is limited to individual items or those stocks locally inspected. Defects are not lot- or type-oriented, except for local stocks or lots that have exceeded their Mission Capability Packages (MCPs). Changes in wholesale stock items occur in the same manner. JMC/SMCA activities prepare an Ammunition Condition Report (ACR) for submission to the owning Service ICP for review and disposition of the material as a result of the new CC. Unilateral reclassification by issuing a NAR is required when the following occurs.

a. OA periodic test results indicate service wide stocks of an ammunition lot or stratum of lots are no longer serviceable.

b. Malfunction investigations indicate inherent design or manufacturing defects are present in a lot or lot stratum that may exist elsewhere in the stockpile.

10.3.4.2 Description. NARs are distributed in message format to AIG 181, 7613, 11005, 11253, and 11480 to pass information directly to all stocking activities and potential users. Only a few NARs apply to non-nuclear ordnance carried aboard submarines and submarine support ships. Therefore, COMSUBLANT and COMSUBPAC monitor NAR messages for their units and transmit only those applicable to them. Individual NARs are numbered consecutively in each fiscal year (e.g. 201-02). Each message normally contains more than one NAR. The NARs serve as supplements to NAVSUP P-801. NAR messages are canceled when they are incorporated into a change or there is a revision to NAVSUP P-801. Procedures for processing NARs by ordnance activities are contained in NAVSUP P-801. A similar system of reporting mishaps and malfunctions, their analysis and investigation, and reclassification action notices exists in the Army. Based on the inter-service agreement on exchange of malfunction and reclassification actions, Army reclassification of common usage items in Navy stocks are usually concurred in and disseminated to Navy users by NARs. U.S. Marine Corps class V(W) mishaps/malfunctions are reported and investigated via Army or Navy channels, depending on which service is the original design and procurement agent. All USMC reclassifications are disseminated by NARs. The Navy and USMC reserve the right to nonconcur in Army reclassifications of common items in their stocks, if readiness factors or circumstances of the Army mishap/malfunction are not likely to be encountered.

10.3.4.3 Unserviceable - Suspended, Limited Use Ammunition NAVSUP P-801. This NAVSUP P-801 publication is the U.S. Navy (USN)/USMC comprehensive listing of all non-nuclear

ordnance, and certain commercial explosive items (such as cartridge-powered stud drivers, dynamite, etc.), which are not suitable for unrestricted issue and use. Permanently suspended lots or lot strata are listed, until rolled-up as an obsolete and unsatisfactory type, and retained on the listing in case such items later reappear. NAVSUP P-801 is listed in Department of Defense Identification Code (DODIC)/Navy Ammunition Logistics Code (NALC) sequence, and alphabetically for items and components without assigned DODIC/NALCs. Entries indicating a release of ordnance are also listed, but appear in only one change or revision. This publication is applicable to all Service units/activities storing and/or handling Navy, Marine Corps, or Coast Guard owned non-nuclear ordnance and to foreign navies purchasing USN/SMCA manufactured ordnance. Limitations imposed on material by the publication do not supersede cautions/warnings/restrictions in technical manuals, ordnance pamphlets, firing tables, or other applicable documents. Those publications shall be followed in addition to the limitations contained in NAVSUP P-801. A material CC listed in NAVSUP P-801 does not necessarily override a locally imposed CC, but shall do so if the local code is less restrictive. Although published by direction of NAVSUP, individual entries may be included at the direction of CNO, CMC, NAVSEA or NAVAIR.

10.3.5 Transportation Discrepancy Report.

10.3.5.1 Scope. The Navy's governing instruction for TDRs is NAVSUPINST 4610.33, which is a joint service instruction. NAVSUPINST 4610.33 applies to all U.S. commercial carriers except Military Airlift Command (MAC) or ocean carriers. DD Form 361 is used to accomplish the following:

a. Notify, or confirm notification to, carriers of a problem with a shipment.

b. Notify a carrier to pick up damaged material and to show where the material is located.

c. Request information from any source to assist in resolving a discrepancy (such as requesting pricing data from a shipping activity or inventory control point).

d. Reply to a request for information

e. Advise action agencies that the discrepancy previously reported was either changed or canceled.

f. Document problems at a stop-off or transshipment point, for action by the consignee.

g. Report all transportation discrepancies that have not been resolved within the time limits set by NAVSUPINST 4610.33.

h. Document discrepancies when services ordered by the Government are not performed by the carrier (e.g., ordnance not delivered on time).

i. Adjust inventory and financial records.

j. Support claims against carriers or contractors.

10.3.5.2 Applicable Forms. Form DD 173/2 (Joint Message Form) NAVSUPINST 4610.33 will be prepared for transportation discrepancies applicable to CLASSIFIED or PROTECTED, including hazardous material shipments. DD Form 470 (Cargo Outturn Report) is used as a

summary and transmittal sheet for a consolidated TDR/DD Form 788 (Private Vehicle Shipping Document) or commercial carrier form file when a sealift carrier is suspected of being the cause of the loss or damage.

10.3.5.3 Discrepancies Excluded by NAVSUPINST 4610.33.

a. Reporting of equipment offered by carriers that cannot meet the safety requirements for moving hazardous materials (see NAVSUPINST 4600.70).

b. Reporting, adjusting, and accounting for supply discrepancies; preservation, packaging, packing, and supply item identification marking, and; lost or damaged parcel post shipments (see Paragraph 10.3.6).

c. Discrepancies found in Foreign Military Sales (FMS) or grant aid shipments not moving in the Defense Transportation System.

d. Any problem with Transportation Control and Movement Documents (TCMDs).

10.3.5.4 Major Discrepancy Types.

a. Astray.

b. Shortage.

c. Pilferage.

d. Theft.

e. Damage.

f. Vandalism.

g. Overage.

h. Special contract or carrier services not provided.

i. Entire shipment not received.

10.3.5.5 Responsibilities. The SDDC is the responsible Executive Agent for managing the DOD worldwide cargo loss and damage reporting and analysis system that includes TDRs. Command Transportation Officers will perform the following functions.

a. Document and submit TDRs on all transportation discrepancies in shipments received, in accordance with NAVSUPINST 4610.33.

b. Investigate and gather facts relating to each discrepancy in shipment to support Government claims against the carrier.

c. Take necessary TDR corrective actions.

d. Respond to requests for additional information within set timeframes.

e. Submit an MLSR report as described in Paragraph 10.3.9. Notify supporting security/law enforcement element immediately upon learning of discrepancies which indicate possible securi-

ty compromise, theft, vandalism, unexplained loss, or any other activity that may warrant their investigation.

10.3.6 Supply Discrepancy Report.

10.3.6.1 Scope. The Navy's governing instruction for SDRs, SF 364, is NAVSUP P-723. SDRs were previously called Report of Discrepancy (RODs). The SF 364 will have the title "Report of Discrepancy" until the form is amended. SDRs are used to accomplish the following.

a. Identification, reporting, and resolution of discrepant shipments occurring in the DOD logistics system, when the discrepancy is due to shipper error.

b. Identification, reporting, and resolution of discrepant shipments of new production material and reworked material. Also included are discrepancies on material received from contractors, other supply officer (Navy to Navy) transfers, and discrepancies involving shipments to or from FMS, Grant Aid, and Military Assistance Program customers.

10.3.6.2 Excluded Discrepancies.

a. Unsatisfactory material involving local base or station warehousing actions to or from internal or satellite storage sites. This exclusion does not apply when a transfer of ownership occurs from one command to another as part of the local move (i.e. in a transfer from the station host to a tenant).

b. Transportation-type discrepancies covered by NAVSUPINST 4610.33 on a TDR, SF 361.

c. Product deficiencies resulting from design, material, or procurement attributable to nonconformance to contractual requirements or specifications are reported in accordance with SECNAVINST 4855.5 series, on a PQDR, SF 368.

10.3.6.3 Responsibilities. Activities submitting SDRs are responsible for submitting them correctly and within the timeframes specified in NAVSUP P-723. Activities responding to SDRs are responsible for researching discrepancies and responding within the timeframes specified in NAVSUP P-723.

10.3.7 Financial Liability Investigation of Property Loss Report.

10.3.7.1 Purpose. The FLIPL will be used to report and account for the following types of inventory adjustments. NAVSUP P-724 provides policy and procedural guidance for the FLIPL.

a. An unresolved physical inventory adjustment that meets the causative research criteria as defined in NAVSUP P-724.

b. An unresolved physical inventory adjustment when research has determined that theft, fraud or negligence is suspected.

c. A FLIPL will be completed within 45 calendar days after the completion of causative research if the causative research has failed to yield the cause of the material gain or loss.

10.3.7.2 Report Form. The form for submitting a FLIPL report is the Form DD 200.

10.3.8 Causative Research.

10.3.8.1 Purpose: Per NAVSUP P-724, causative research is an in-depth investigation to identify why a physical inventory adjustment occurred. It is performed when pre-adjustment research cannot resolve the discrepancy.

10.3.8.2 Procedures: Conduct causative research after the physical inventory is completed and adjustments are processed to the stock point record. Adjustments requiring causative research:

a. Adjustments on Controlled Inventory Items (Cat I and Cat II) regardless of dollar value.

b. Adjustments on CIIC 7 (Cat II) items with Net Explosive Weight (NEW) greater than or equal to 10 pounds.

10.3.8.3 When causative research is completed:

a. When cause has been established, correct erroneous transactions, retain supporting documentation for two years.

b. If the reason for the loss or gain has not been established, submit a DD Form 200, FLIPL report (see Paragraph 10.3.7). If prior (Commander's) Operational Report (OPREP)-3 Navy Blue message was submitted, annotate the DD Form 200 with the OPREP-3 DTG.

10.3.9 Missing, Lost, Stolen, or Recovered Report.

10.3.9.1 Scope. Per NAVSUP P-724 MLSR ammunition is both an inventory accuracy issue as well as a security issue. Unique MLSR message reports have been discontinued. Investigation concerning MLSR ammunition should follow causative research procedures (see Paragraph 10.3.8) Reports for apparent MLSR incidents affecting Cat I and Cat II Arms, Ammunition & Explosives (AA&E) and classified material shall be accomplished via submitting an OPREP-3 Navy Blue message within 48 hours of incident discovery. Procedures and format for an OPREP-3 Navy Blue message are found in OPNAVINST 3100.6 series.

CHAPTER 10.4

Technical Manuals

Table of Contents

Paragraph	Subject	Page
10.4.1	General	10-4-1
10.4.2	Surface Ammunition Technical Manuals	10-4-1
10.4.3	Reporting Technical Manual Deficiencies	10-4-1

List of Illustrations

Figure	Title	Page
10-4-1	Technical Manual and Publication Listing.	10-4-2

CHAPTER 10.4

Technical Manuals

10.4.1 General.

10.4.1.1 Purpose. Technical manuals and publications are used for a variety of purposes.

a. Identify specific design, safety, handling, maintenance, or storage specifications for a specific ammunition item or group of items.

b. Identify general design, safety, handling, maintenance, or storage specifications for a group of ammunition items.

c. Provide desk reference documents for ammunition management.

10.4.1.2 Governing Instruction. NAVSEA technical manuals are governed by NAVSEAINST 4160.3 and S0005-AA-PRO-010.

10.4.1.3 Publication Listing. This section identifies the technical manuals and publications that cover various surface ammunition items and processes, and what command has been assigned as the Technical Manual Maintenance Activity (TMMA).

10.4.1.4 Publication Requisitioning. DOD activities may order manuals and publications listed in Figure 10-4-1 from these three sources:

a. To order a current copy or view Portable Document Format (PDF) go to https://nll1.ahf.nmci.navy.mil/.

b. To view PDF and/or be placed on automatic distribution, go to https://mercury.tdmis.navy.mil/cert/certtest.cfm and fill out a customer request form.

c. To be placed on automatic distribution only, go to https://nsdsa2.phdnswc.navy.mil and fill out a customer request form.

10.4.2 Surface Ammunition Technical Manuals. The technical manuals and publications listed in Figure 10-4-1 provide detailed information for surface ammunition items. These technical manuals and publications are to be referred to as the authoritative source of information.

10.4.3 Reporting Technical Manual Deficiencies. Any command identifying a deficiency, problem, or providing a recommendation relating to a technical manual may use a NAVSEA (User) Technical Manual Deficiency/Evaluation Report (TMDER), NAVSEA Form 4160/1 located in the back of each manual. The user must completely and accurately fill out the form and mail it to the preprinted address so that appropriate action can be taken on the deficiency/evaluation. It is important to note that the preprinted form can only be used for the manual in which it is in due to the preprinted information.

MANUAL NUMBER	TITLE	TMMA (Command)
SWO10-AD-GTP-010	Small Arms & Special Warfare Ammunitions	NSWCDIV Crane
SWO10-AE-GYD-010	NAVSEA Surface Ammunition Management	NSWCDIV Crane
SWO10-AF-ORD-010/ NAVAIR 11-1-117	Identification of Ammunition	NSWCDIV Crane
SWO10-AG-ORD-010(C)	List of Explosives for Navy Munitions	NSWCDIV Indian Head Yorktown Det
SWO10-AH-ORD-010(C)	Armament of Naval Vessels	NSWCDIV Crane
SWO20-AC-SAF-010	Transportation & Storage Data for Ammunition	NSWCDIV Indian Head Earle Det
SWO30-AA-MMO-010	Navy Gun Ammunition	NSWCDIV Crane
SWO50-AB-MMA-010/ NAVAIR 11-15-7 Vol 1	Pyro Screening/Marking/Countermeasure Devices	NSWCDIV Crane
SWO50-AB-MMA-010/ NAVAIR 11-15-7 Vol 2	Pyro Screening/Marking/Countermeasure Devices (Obsolete and Unserviceable Items)	NSWCDIV Crane
SWO50-AC-MMA-010/ NAVAIR 11-15-8	Toxic Hazards Associated with Pyro Items	NSWCDIV Crane
SWO60-AA-MMA-010	Demolition Materials	NSWCDIV Crane
SWO60-AA-MMA-020	Demolition Materials	NSWCDIV Crane
SWO61-AA-MMA-010	Use of Explosives in Underwater Salvage	NSWCDIV Crane
SWO61-AB-ORD-010	Carts & CADs for Underwater Associated Equipment	NSWCDIV Crane
SWO73-AC-MMA-010	Miscellaneous Chemical Munitions	NSWCDIV Crane
NAVSUP P-801	Ammunition Unserviceable, Suspended, and Limited Use	NAVSUP GLS AMMO
NAVSUP P-802	Navy Ammunition Logistics Codes	NAVSUP GLS AMMO
NAVSUP P-805	Receipt, Segregation, Storage, and Issue Sentencing	NAVSUP GLS AMMO
NAVSUP P-807	Fleet Sentencing	NAVSUP GLS AMMO

Figure 10-4-1. Technical Manual and Publication Listing

SECTION 11

Maintenance Management

Table of Contents

Chapter	Subject	Page
11.1	Maintenance Functions	11-1-1
11.2	Maintenance Process	11-2-1

CHAPTER 11.1

Maintenance Functions

Table of Contents

Paragraph	Subject	Page
11.1.1	General	11-1-1
11.1.2	Maintenance Levels	11-1-2
11.1.3	Responsibilities	11-1-5

List of Illustrations

Figure	Title	Page
11-1-1	Maintenance Management Organizational Relationships	11-1-3
11-1-2	Specific Responsibilities and Assignments	11-1-4

CHAPTER 11.1

Maintenance Functions

11.1.1 General. Maintenance is all action taken to retain material in a serviceable condition or to restore it to serviceability.

a. Preventive maintenance is the care and servicing by personnel for the purpose of maintaining equipment and facilities in satisfactory operating condition by providing for systemic inspection, detection, and correction of incipient failures either before they occur or before they develop into major defects.

b. Corrective maintenance are those actions taken to return unserviceable material to a serviceable condition.

c. Because of its impact on readiness, Maintenance is one of the most important functions associated with the in-service portion of the ammunition life cycle. Maintenance operations are the most economical and rapid means of generating additional Ready-for-Issue (RFI) ammunition to support operating forces. On-hand assets include unserviceable stocks (less CC H, P and V), based on the presumption that unserviceable items can be made RFI, given trained personnel, available components, and authorized facilities. Policies and procedures respond to the Chief of Naval Operations (CNO) Approved Acquisition Objective (AAO) and to Fleet operational requirements. The AAO is the inventory goal to be achieved and maintained. The various Reclassification Operations determine the assets in the inventory requiring maintenance that are used towards achieving the AAO.

11.1.1.1 Reclassification Operations. Reclassification of serviceable stocks to unserviceable and their migration from RFI to Non-RFI (NRFI) stock, generating the need for maintenance, occurs as a result of the following programs and operations.

a. Ordnance Assessment (OA) Program. This program, in addition to providing a general assessment of the quality of the ammunition, will identify lots, strata, or types of end items requiring correction of defects or replacement of unsafe or unreliable components.

b. Malfunction Investigations. Investigations to determine causes of reported ordnance accidents, incidents, or malfunctions often detect unsafe, unreliable, or defective components assembled in lots or lot strata. Maintenance may be required to correct the defective lots.

c. Segregation. The segregation process separates and classifies ordnance of temporarily suspended condition (CC K). Repairable items, classified as CC E and F, by the segregation process, are candidates for minor and major maintenance respectively as described in Paragraph 11.1.2.

d. Local Inspection. Routine day-to-day operations such as issue, receipt, magazine restowage, or magazine surveillance, involve either a formal quality assurance inspection or a visual inspection by qualified ordnance personnel. During these operations “set asides” of unserviceable repairable items are generated.

e. Modification. In certain cases, it becomes necessary to convert either serviceable or unserviceable assets of an item in long supply (in excess of inventory objective levels) to an item configuration that is in short supply.

11.1.1.2 Organizational Relationships. Figure 11-1-1 identifies the organizations involved in the shore-based maintenance processes and their relationship to each other.

11.1.2 Maintenance Levels. Organization Level (O-level) Maintenance consists mainly of those maintenance actions that are typically done by the Fleet while underway on board a ship. The Fleet normally supports these actions as part of their normal duties. From the Program Manager (PM) Navy 2T Conventional Ammunition Systems (NCAS) perspective, ammunition maintenance is divided into two categories: Minor (Organization Level Maintenance) and Major (Depot Level Maintenance). This convention is standard for both the Navy and for work done by the Single Manager for Conventional Ammunition (SMCA). Figure 11-1-2 represents maintenance actions typical for each level.

11.1.2.1 Major Maintenance. This term is generally synonymous with Depot maintenance. Depot maintenance is that maintenance performed on materiel requiring major overhaul or a complete rebuild of parts, assemblies, subassemblies, and end items, including the manufacture of parts, modifications, testing and reclamation as required. Normally includes renovation, conversion, modification, reclamation, refurbishment, and remanufacture of serviceable or unserviceable assets.

a. Renovation is a general term that denotes the performance of any process (other than complete breakdown and reassembly) required to render existing assemblies, sub-assemblies and related items fully serviceable. Renovation includes exterior maintenance, overhaul, reconditioning, repair and rework.

b. Conversion is a change in form and/or function of an item or population of items. Conversion results in a change to the configuration identity (i.e., Department of Defense Identification Code (DODIC)/Navy Ammunition Logistics Code (NALC)) of converted items. Conversion may be accomplished during the maintenance, procurement or Research, Development, Test and Evaluation (RDT&E) process.

c. Modification is a change that normally affects the configuration identity (i.e., changes the DODIC/NALC/National Stock Number (NSN)) and may affect the form and/or function of modified items. Modification may be accomplished during maintenance operations to comply with technical directives.

d. Reclamation is the process of recovering usable components from assemblies or All-Up-Rounds that are obsolete, in excess of requirements, or unserviceable and beyond economic repair.

e. Refurbishment is similar to renovation to restore to a former better state as by cleaning, repairing or rebuilding.

f. Remanufacture is to take existing items and manufacture into a new product.

11.1.2.2 Minor Maintenance. This term is generally synonymous with Organizational maintenance. Normally includes cleaning, painting, repackaging, restenciling, and corrosion control.

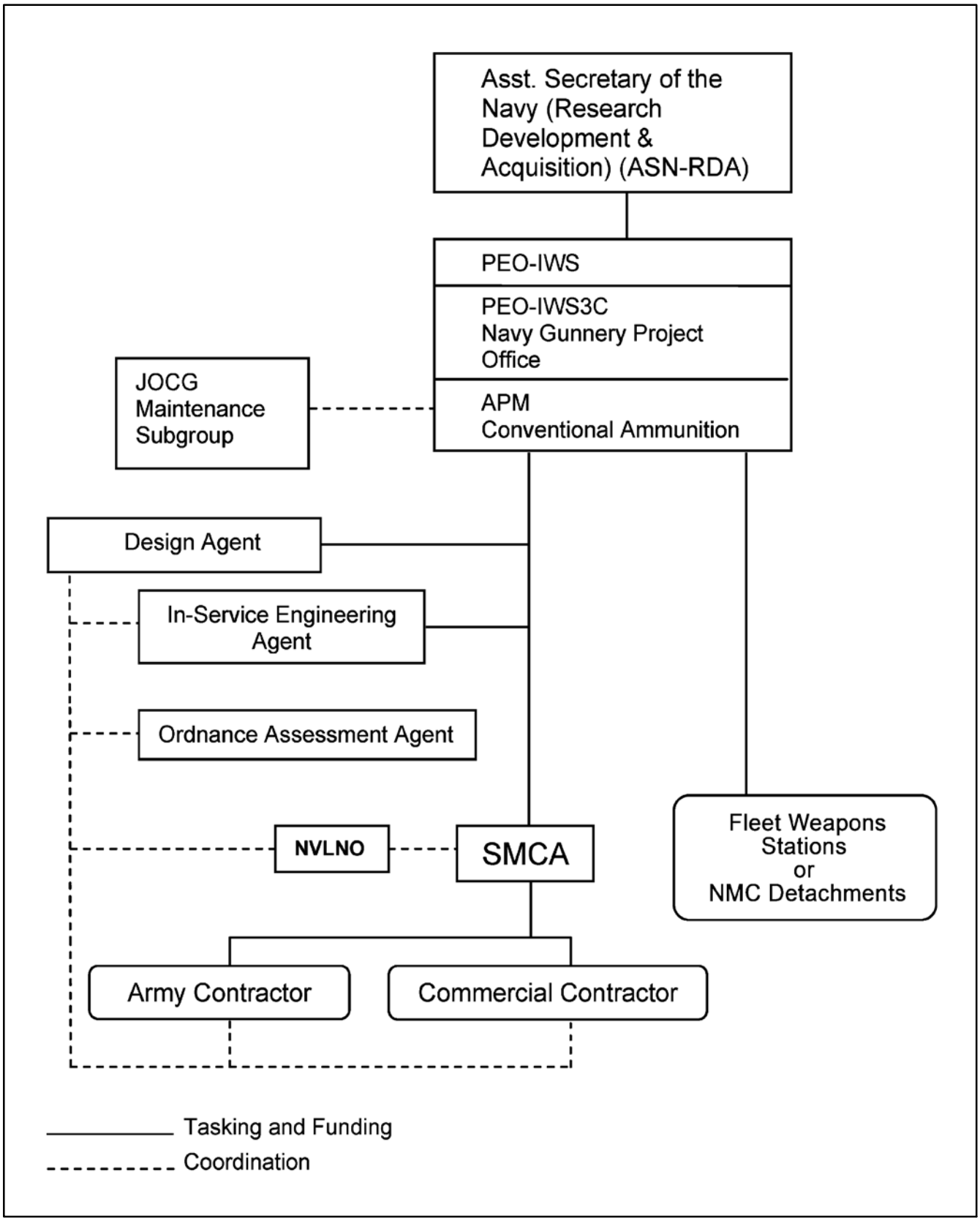

Figure 11-1-1. Maintenance Management Organizational Relationships

Organizational	Intermediate/Minor Maint	Depot/Major Maint
GUN and LANDING PARTY AMMUNITION		
Breakout, visual inspection, and preparation for loading Compliance with NARs Compliance with Technical Directives (TDs). Upload and download from operational commitments	Packaging and/or palletizing complete round or components. Cleaning and painting Compliance with NARs Compliance with TDs.	Packaging and/or palletizing complete round or components. Component replacement. Painting and corrosion control. Compliance with NARs Compliance with TDs.
PYROTECHNICS and DEMOLITION MATERIALS		
Breakout, visual inspection, and preparation for loading Compliance with NARs Compliance with TDs. Upload and download from operational commitments	Packaging and/or palletizing complete round or components. Compliance with NARs Compliance with TDs.	Packaging and/or palletizing complete round or components. Compliance with NARs Compliance with TDs.
SHOULDER-FIRED MISSILES/ROCKETS		
Breakout, visual inspection Compliance with NARs Compliance with TDs. Upload and download from operational commitments	Packaging and/or palletizing complete round or components. Visual inspection of containers Replacement or repair or minor components Compliance with NARs Compliance with TDs.	Packaging and/or palletizing complete round or components. Component replacement. Painting and corrosion control. Visual inspection and refurbishment of containers Compliance with NARs Compliance with TDs.
CADs/PADs		
Breakout, visual inspection Install and replace Compliance with NARs	Breakout, visual inspection Install and replace Compliance with NARs	Breakout, visual inspection Install and replace Compliance with NARs

Figure 11-1-2. Specific Responsibilities and Assignments

11.1.2.3 Ammunition Condition Codes considered for maintenance.

a. Serviceable ammunition is capable of performing as designed or as intended (under limited or restricted conditions). Items identified condition code “A”, “B”, “C”, or “D,” are categorized as serviceable. Only conversion or modification would be considered on serviceable ammunition.

b. Unserviceable ammunition has one or more defects that would, or would be expected to, preclude or impair the ability of the ammunition to perform as intended. Items identified condition code “E,” “F,” “G,” “H,” “P” or “V” are categorized as unserviceable. Normally only E, F & G are considered for Major Maintenance with E normally associated with Minor Maintenance.

11.1.3 Responsibilities.

11.1.3.1 Resource Sponsor. The OPNAV resource sponsor for maintenance is N411.

a. Provides resource management, policy, overall monitoring, and Program Objective Memorandum (POM) funding for ammunition maintenance.

b. Oversees the development and submittal of the POM.

c. Coordinates with Navy PMs as necessary to support the POM and the PMs budget submissions.

11.1.3.2 Program Manager.

a. Provides program management, policy, overall monitoring, and direction for the maintenance of ammunition.

b. Develops, coordinates, and justifies the requirements stated in the maintenance POM and budget submittals.

c. Provides peacetime, surge, and mobilization maintenance requirements and priorities to the SMCA.

d. Allocates, as appropriate, Operations & Maintenance, Navy (O&M,N) funding and work request orders to accomplish in-service engineering functions incident to maintenance.

e. Provides a Military Interdepartmental Purchase Request (MIPR) to the SMCA for maintenance work to be performed by an SMCA activity.

f. Provides funding to Fleet Weapon Stations (WPNSTAs) and Navy Munitions Command (NMC) Detachments for maintenance work to be performed by that activity.

g. Reviews and, when appropriate, approves maintenance activity requested or recommended deviations which are classified as major or critical.

h. Provides guidance to the In-Service Engineering Agent (ISEA) concerning their responsibility for items undergoing maintenance.

i. Arbitrates and resolves engineering and technical disagreements between the ISEA and the cognizant Design Agent (DA).

j. Review critical or interfacing engineering change proposals affecting items undergoing maintenance.

11.1.3.3 Design Agent. The DAs are assigned engineering and design responsibilities including development and maintenance of design documentation for modified ammunition items (including support equipment) under their respective cognizance's. Specific responsibilities and assignments are outlined in Paragraph 10.1.2.

11.1.3.4 In-Service Engineering Agent. The ISEA is assigned engineering responsibilities for maintenance of in-service assets. The ISEA does all the monitoring and coordination for all maintenance performed by either the WPNSTAs or the SMCA. They are the primary interface for WPNSTAs and the SMCA for SMCA activities. Specific responsibilities and assignments are outlined in Paragraph 10.1.2.

11.1.3.5 Naval Supply Systems Command Global Logistics Support (NAVSUP GLS AMMO).

a. Collects, records, and maintains the supply data essential to the maintenance process.

b. Assist the ISEA in tracking the status of maintenance items due-in from SMCA and Fleet WPNSTAs activities. Provides status to the ISEA and the stocking points programmed to receive the material back into the active inventory.

c. Generates Military Standard Requisition and Issue Procedure (MILSTRIP) prepositioned material receipt cards to alert consignee activities of shipments due-in from maintenance facilities.

d. Provides periodic reports of overdue shipments.

CHAPTER 11.2

Maintenance Process

Table of Contents

Paragraph	Subject	Page
11.2.1	Maintenance Planning	11-2-1
11.2.2	Maintenance Cost Reimbursement	11-2-2
11.2.3	Maintenance Documentation	11-2-3
11.2.4	Maintenance Execution	11-2-3

CHAPTER 11.2

Maintenance Process

11.2.1 Maintenance Planning.

11.2.1.1 General CNO Guidance. The CNO has promulgated Appendix G to maximize Fleet readiness, by providing policies for the programming, planning and execution of maintenance programs for Naval conventional ordnance.

a. PMs responsible for preparing POM issue papers and Navy Budgets shall program to maintain serviceable ammunition levels not to exceed the most current constrained Non-Nuclear Ordnance Requirement (NNOR) output or projected inventory level, whichever is less.

(1) Those items not included in the NNOR shall have maintenance requirements based on a documented baseline such as shipfill, combat consumption, training pipeline, 30,000 series allowances or component attrition/failure.

b. Unserviceable ammunition reported in the Ordnance Information System (OIS) will be used as the beginning point of the programming baseline.

c. The primary budgeting system for maintenance shall be the Optimized Performance Model (OPOM).

11.2.1.2 2T COG Maintenance Plan. The 2T COG Maintenance Plan starts as an output of OPOM maintenance module. The initial plan identifies projected maintenance candidates by Fiscal Year (FY) (budget FY + out years), unit costs and location of maintenance. A detailed lot-by-lot review is then done by the ISEA to assure only appropriate lots and quantities are maintained and replacement components and documentation will be available.

a. The primary objective of the Maintenance Plan is to provide a complete document which integrates Inventory Objectives, Asset Readiness procurement due-ins, usage, and asset degradation into the maintenance planning process.

b. Input data and devices for generation of the Maintenance Plan:

(1) OPOM.

(2) Worldwide OIS inventory data.

(3) Planned procurements, Non-Combat Expenditure Allowance (NCEA) consumption, and AAOs for the Future Years Defense Plan (FYDP).

(4) Projected maintenance due-ins.

(5) Projected generations of repairable unserviceable ordnance due to Receipt, Segregation, Storage and Issue (RSS&I) inspections, OA, Notices of Ammunition Reclassification (NARs) or etc.

(6) Average maintenance unit costs are obtained from the WPNSTAs, Single Manager for Conventional Ammunition (SMCA) or contractors based on Depot Maintenance Work Requirement (DMWR) defining the scope of work.

c. The Maintenance Plan is published biannually to coincide with the Department of Navy (DON) budget submission (May) and again updated to reflect the year end asset posture (November).

d. The Maintenance Plan consists of the following documents.

(1) Major/Minor Maintenance Plan by FY.

(2) Technical Documentation Requirements/Status Report. This document identifies the current status of the required technical documentation necessary to meet the Maintenance Plan(s) schedule.

(3) Component Requirements List as identified by project. This document is a listing of components that are to be provided as Government Furnished Material (GFM) to the maintenance activities.

(4) Component Shortfall List. This document is a listing that identifies component shortfalls that may necessitate procurement actions.

11.2.2 Maintenance Cost Reimbursement.

11.2.2.1 Major Maintenance.

a. Major maintenance performed by a Fleet WPNSTA or NMC Detachment on Navy ammunition is on a reimbursable basis. Requirements and cost are negotiations by the PM, the WPNSTA, or NMC Detachment. Funding is provided by the PM to the WPNSTA or NMC Detachment.

b. Major maintenance performed by the SMCA on Navy wholesale stocks is on a cross-service (reimbursable) basis. The Joint Ordnance Commanders Group (JOCG) Joint Conventional Ammunition Policies and Procedures (JCAPPs) have been approved by the Office of the Under Secretary of Defense (OSD) (Acquisition, Technology and Logistics) as an alternative to the corresponding chapters of the Department of Defense (DOD) 5160.65-M, SMCA (Implementing Joint Conventional Ammunition Policies and Procedures). Requirements and cost negotiations are submitted by the PM to the SMCA in accordance with JCAPP 06, Maintenance. A funding is provided by a MIPR, and billing is submitted by the SMCA when work is completed.

11.2.2.2 Minor Maintenance.

a. Minor maintenance performed by a Fleet WPNSTA on Navy ammunition is performed on a reimbursable basis, in the same manner as major maintenance at a Fleet WPNSTA.

b. Minor maintenance performed by the SMCA on Navy wholesale stock is on a common-service basis (non-reimbursable) as stated in JCAPP 06, Maintenance. The SMCA plans and budgets for storage and warehousing of all material in its custody. Storage and Warehousing funds are used for storage and minor maintenance processes. These funds are allocated by the SMCA to storage activities based on projected workload. The services may submit a prioritized list of assets requiring upgrade through non-reimbursable maintenance.

11.2.3 Maintenance Documentation.

11.2.3.1 Depot Maintenance Work Requirement. The DMWR is developed by the ISEA to convey the mandatory technical information to maintenance activities, in accordance with MIL-PRF-63012B(1). The DMWRs show special safety, technical, and production inspection requirements; tooling and equipment to be used; methods; procedures; materials; and document references. Maintenance activities use the DMWR to write a Standard Operating Procedure (SOP) for the assigned maintenance operation.

11.2.3.2 Configuration Management (CM). CM must be maintained through all maintenance actions whether on a single ordnance item or a complete ammunition lot. The processes below must be maintained from their initiation during the acquisition process described in Chapter 9.4.

a. Approval for Navy Use. If the maintenance procedure takes an existing item in long supply and converts it to a new configuration, the new configuration must be approved by the Weapons Systems Explosives Safety Review Board (WSESRB) prior to the conversion.

b. Type Classification. If the maintenance procedure is changing any of the functional characteristics of the ordnance item, the type classification must be reviewed to see if any changes are required.

c. Hazard Classification. If the maintenance procedure is changing any of the explosive characteristics of the ordnance item, the hazard classification must be reviewed to see if any changes are required.

d. Lot Numbering/Control Numbers. All maintenance actions must be reviewed to determine if the actions require changes in lot numbering and/or control numbering, due to component replacement etc.

e. Deviations, and Engineering Change Proposals (ECPs). Deviations, and ECPs are handled in the same manner as during the production process to maintain a complete audit trail.

f. Automated Data List (ADL). The ADL is the controlling configuration management document. All changes that occur during maintenance must be properly recorded in the ADL.

11.2.4 Maintenance Execution. The essential elements to begin execution of a maintenance assignment are funding from the PM, a DMWR from the ISEA, and the assets on which the maintenance is to be performed (including any required replacement components).

11.2.4.1 Scheduling. The ISEA will select the site (SMCA or WPNSTA) and schedule the maintenance as coordinated with the PM. If the assets are not located at the maintenance facility, the Inventory Manager (IM) at NAVSUP GLS AMMO will be directed by the PM or ISEA to transfer the assets to the maintenance facility in time for the scheduled maintenance.

11.2.4.2 Maintenance Status. The following reports are available to keep the PM/ISEA informed of the maintenance status and when the assets will be returned to the active RFI inventory.

a. Ammunition Maintenance Progress Reporting System (AMPRS). The report is submitted monthly to the ISEA. It is used by all surface ammunition maintenance activities to facilitate reporting maintenance progress on a timely basis. This data in turn is utilized to formulate

progress reports for the PM. The AMPRS report contains the following data on all funded maintenance projects.

(1) DODIC, OIS Control Group Family, and any Local Control Numbers.

(2) Quantity.

(3) Condition Code.

(4) Unit Cost.

(5) Total Funded Cost.

(6) Monthly Planned Schedule.

(7) Inducted Units.

(8) Accepted Units.

(9) Actual Unit Cost on Completed Items.

(10) Actual Workhours.

(11) Month Complete.

(12) Funds Balances/Overruns.

(13) Remarks, with detailed explanations of fallout, overruns, deviations, changes in Scope of Work, or any other data crucial to the funded assets.

b. DRSMC Form 38s. For maintenance and production within the SMCA, monthly delivery status reports (Form 38s) are furnished to the requiring Service, advising of the progress. In addition to delivery schedules, Form 38s also the cause for any delays.

c. Procurement/Renovation/Production File. As inventory manager, NAVSUP GLS AMMO maintains a central Procurement, Renovation, and Production (PRP) status file for ordnance items, in Ordnance Information System-Wholesale (OIS-W). See Chapter 9.3 for information on this file.

d. Prepositioned Material Receipt Cards (PMRC). NAVSUP GLS AMMO loading of delivery schedules into the OIS PRP module enables the establishment of due-ins and the generation of PMRCs to prospective receiving field activities. See Chapter 9.3 for information on PMRCs.

SECTION 12

Inventory Management

Table of Contents

Chapter	Subject	Page
12.1	Inventory Management System Overview	12-1-1
12.2	Allowance Lists	12-2-1
12.3	Cataloging and Item Identification Systems	12-3-1
12.4	Fleet Ordnance Support	12-4-1
12.5	Requisition and Return Management	12-5-1
12.6	Transaction Reporting	12-6-1
12.7	Stratification Process	12-7-1

CHAPTER 12.1

Inventory Management System Overview

Table of Contents

Paragraph	Subject	Page
12.1.1	General	12-1-1
12.1.2	Ordnance Distribution and Stocking	12-1-1
12.1.3	Automated Systems Support	12-1-3

List of Illustrations

Figure	Title	Page
12-1-1	Inventory Management Organizational Relationships	12-1-2

CHAPTER 12.1

Inventory Management System Overview

12.1.1 General. This chapter addresses functional areas of inventory management. This includes the distribution and stocking of non-nuclear ordnance; and requisitioning, returning, issuing, receiving, and storing of ordnance items.

12.1.1.1 Asset Allocation. The inventory management functions pertain to the management of a multi-billion dollar inventory consisting of a wide range of end items and components. These items represent the aggregate material on hand, or due in, needed to satisfy the Total Munitions Requirement (TMR), the sum of War Reserve Material Requirement (WRMR) and Training and Testing Requirement (TTR) stocking objectives, afloat and ashore. Total Fleet requirements are allocated in accordance with Office of the Chief of Naval Operations (CNO) (OPNAV) allocation letters, and within budget constraints. Shortages to these allocation goals are satisfied mainly through new production or maintenance actions. Assets due in from production are consigned on a "fair-share" basis to satisfy claimant WRMR/TTR shortfalls. Conventional ordnance is allocated and distributed to the afloat forces to fill allowances of combat and auxiliary ships. A distinctive feature of the ordnance material management system is the positioning of retail replenishment stocks at tidewater locations to facilitate over-the-pier accessibility for on-loading and offloading of combatants and auxiliary ships.

12.1.1.2 Perspective. The primary focus of inventory management is to develop an asset distribution plan to best meet the needs of the Fleet and all other Non-Combat Expenditure Requirements (NCEA) users, and to manage the available ordnance assets according to that plan within the fiscal constraints applied by the Navy budget. Maintaining the right ordnance, in the right material Condition Code (CC), at the right stockpoint (with accurate visibility of the assets in the automated inventory systems) at each of these retail stock points is a primary management challenge.

12.1.1.3 Organizational Relationships. The organizations involved in inventory management are spread throughout the Navy organizational structure. Figure 12-1-1 identifies the organizations involved in the inventory management processes and their relationship to each other. The following sections will describe the inventory management processes and identify the organizational responsibilities for those processes.

12.1.2 Ordnance Distribution and Stocking.

12.1.2.1 Inventory Stockage Concept. Department of Defense (DOD) policy states that support activities will provide maximum material logistics support for approved forces under an inventory stockage concept that minimizes supply response time. Stockage for each material category will be provided by achieving a balance between required supply performance and economy, consistent with peacetime operations and combat readiness considerations.

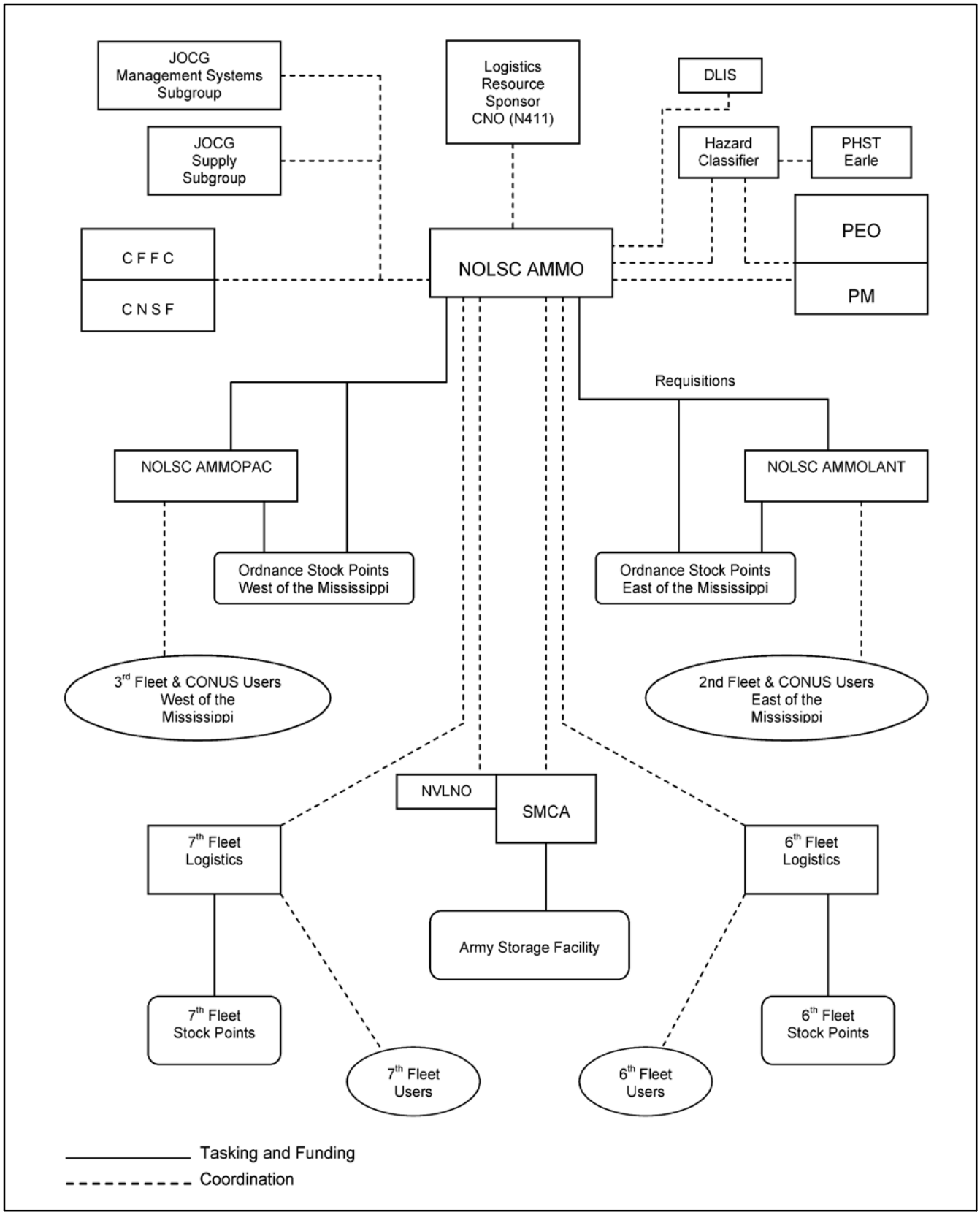

Figure 12-1-1. Inventory Management Organizational Relationships

12.1.2.2 Supply Source Levels. To facilitate maximum inventory support for approved forces, the customer has three levels of supply source to draw from. The first level is from their own shipfill, mission load, or service ammunition allowance which has been tailored to their mission. This supply is carried with them to draw from, wherever they deploy. The second level of supply source is retail-resupply stocks from cargo loads aboard Combat Logistic Force (CLF) ships and some overseas secondary stocking points, or by cross-decking from other combatants. This supply is available to the customer through underway replenishment or overseas port visit. The third level of supply source is from the Continental United States (CONUS) primary and secondary stocking points. This supply is available to the customer primarily pierside or at anchorage, and can be from either retail stocks, or wholesale stocks which have been transferred from inland wholesale storage to the retail stockpoint for transfer to the customer. These CONUS primary and secondary stocking points support the Fleet by filling the shipfills and mission loads for combatant ships initially and "topping them off" as required, at pierside or by lighterage.

12.1.2.3 Requisition. As a rule, the supply distribution system for conventional ordnance operates as a "pull" system, in that material for stock in support of end-use requirements is drawn down from the source of supply. By this system, ordnance items needed to support allowances and/or satisfy noncombat expenditures are requisitioned by the local weapons/ordnance officer.

a. The pull system depends on local initiative in determining future shortages to requirements and initiating material requests in a prescribed manner. The following are examples of requirements that are requisitioned ("pulled") from the source of supply: stockpoint requirements for authorized load plans and allowance items, material to support ordnance evaluation and maintenance projects, and replacement of issues to ships and local activities from stock.

b. It is important to note that requisitions for stock do not necessarily trigger redistribution actions between stockpoints. In situations where stock relocation between the holding and requiring activities is uneconomical, requisitions for replenishment may be satisfied by assets due from procurement or maintenance, by statistically earmarking a portion of the assets for the requiring activity. This earmarking is accomplished by the Naval Supply Systems Command Global Logistics Support (NAVSUP GLS AMMO) Inventory Manager (IM) working with the Acquisition or Maintenance Manager to modify the destination(s) listed on the procurement or maintenance contract.

12.1.2.4 Redistribution. In contrast to pulling (requisitioning) requirements, items from production or maintenance are pushed (allocated) to activities. Also items may be pushed to activities to accommodate major changes or readjustments to the Fleets' stock distribution patterns. The Fleet Combatant Commanders provide direction for the positioning of shipfills, WRMR, and TTR stocks. Redistribution docs are prepared by the Inventory Control Point (ICP)/Inventory manager and are used to move material between two ashore locations (never to send material to a ship).

12.1.3 Automated Systems Support. To assist in the management of ordnance assets at retail stocking points and user activities, automated systems have been developed and installed throughout the Fleet and support activities. The Ordnance Information System-Retail (OIS-R) has been developed to operate in an "open system environment" which will allow the users to place it on Windows© operating systems, regardless of hardware platform. Specifically, the

OIS-R application utilizes the Oracle© Relational Data Base Management System (RDBMS) and operates in a client/server environment or in a stand-alone personal computer (PC) mode under Windows© 95, 98, NT, or Windows© 2000. Additional Windows© operating systems are evaluated for OIS-R compatibility as they are made available. In the client/server environment, the Oracle© RDBMS resides on the server, which can be a UNIX or Windows© NT Server operating system. The client PC workstations can run any of the Windows© 95, 98, NT or 2000 operating systems that utilize Oracle© SQL *NET software to communicate with the RDBMS. Within the Navy Marine Corps Intranet (NMCI) OIS-R appears to function satisfactorily in the client/server environment only. Any PC, on NMCI or otherwise, with a browser and access to the Internet, will be able to use OIS-R.

12.1.3.1 Ordnance Information System. OIS is an ordnance inventory and management system designed for use by all Navy shore and afloat activities.

a. OIS was designed and is centrally managed by NAVSUP GLS AMMO N6 to provide a multi-level automation tool to be used by any retail ordnance stockpoint or user activity/unit. Due to the system being designed for an “open systems environment”, the computer hardware is no longer centrally managed. The system is tailored to best support each individual command’s needs by loading only the modules and sub-modules that will be used. This flexibility improves the support to the Fleet and reduces system maintenance cost. As an individual command’s mission changes, the system can change with it by adding or deleting modules as required. OIS standalone operates on a PC, with the OIS Client/Server version providing client/server networking capabilities for multi-user access to the database.

b. OIS users are able to customize the system to best fit their activity needs. Standardized software for all configurations allows for selectable functionality. An activity can choose modules when it is available and if their system has enough memory, disk space and processor speed. OIS application software includes the following functionality.

(1) Inventory - to the specific grid location

(2) Requisitioning

(3) Issue/Receipt Reporting

(4) Expenditure Reporting

(5) Asset Maintenance

(6) Notice of Ammunition Reclassification (NAR) processing

(7) Transaction Reporting (either Ammunition Transaction Reporting (ATR) or Transaction Item Reporting (TIR))

(8) Space Management - including Net Explosive Weight (NEW) Management for Explosive Arc and Compatibility Management

(9) Load Plan Management

(10) Excess/Disposal Processing

(11) DD Form 1348-1 and shipping labels

(12) Bar Code processing

c. OIS interfaces with various systems to exchange data and information. Specifically:

(1) Ordnance Information System-Wholesale (OIS-W) for Navy and Marine Corps aviation ordnance inventory data.

(2) Marine Ammunition Accounting and Reporting System (MAARS II) for Marine Corps ground ordnance inventory data.

(3) Total Ammunition Movement Management System (TAMMS) for internal activity transportation.

(4) Transportation Coordinator's Automated Information for Movement System II (TCAIMS II) for support of movement to and load planning of Navy Amphibious Ships and Maritime Prepositioned Force (MPF) Ships.

(5) Defense Transportation Tracking System (DTTS) for ordnance transportation satellite tracking.

(6) Combat Ammunition System (CAS) for United States Air Force (USAF) assets reported in OIS.

d. OIS provides for numerous ways of exchanging data with other systems, including File Transfer Protocol (FTP), Streamlined Automated Logistics Transmission System (SALTS), and Defense Automatic Addressing System (DAAS). Activity communication access is dependent upon the activity's communication capabilities.

12.1.3.2 Total Ammunition Movement Management System.

a. TAMMS is used to manage a station-wide NEW load plan.

b. TAMMS was designed by Naval Weapons Station (NWS) Seal Beach Det., Concord to provide a tool to NWS or Navy Munitions Command (NMC) Detachments for ordnance distribution management within the station. The computer software is centrally managed by NWS Seal Beach Det., Concord. TAMMS maintains an automated load plan that contains all valid conveyance locations and the NEW allowed at each location. Locations may be grouped into arcs or viewed separately. As railcars, trucks, barges, ships, or other conveyances are moved, TAMMS compares their laden NEW to the NEW allowed in a specified area. TAMMS generates immediate online warning messages to operators when NEW limits may be exceeded as the result of a proposed conveyance move. Warnings are also generated for a number of other conditions, including over/under-loaded conveyances and material incompatibility. TAMMS also records the fire hazard, security classification, and transportation codes for all material stored in conveyances. This will ensure that conveyances will be spotted in appropriate security areas, and provide firefighters with valuable hazard information.

12.1.3.3 Defense Automatic Addressing System Center https://www.daas.dla.mil/daashome/. The center's system located in Dayton Ohio acts as the central distribution control point for DOD message traffic. The system receives message traffic from all sources and directs it to

the appropriate recipient(s), by message or electronically through dedicated phone lines. DAAS directs ATRs to the appropriate destination(s) without any processing actions. DAAS processes ordnance supply and shipment status transactions received (i.e., requisitions) and directs Military Standard Requisition and Issue Procedure (MILSTRIP)/Military Standard Requisition and Accounting Procedure (MILSTRAP) to their appropriate recipient(s).

12.1.3.4 Army Systems. The Army has four systems to support wholesale ordnance management.

a. Standard Depot System (SDS). Army ordnance activities use this system to communicate directly with OIS-W through DAAS on Navy ordnance items not assigned to the Single Manager for Conventional Ammunition (SMCA), and through the Commodity Command Standard System (CCSS) on Navy ordnance items assigned to the SMCA, which are located at that activity. SDS is the source of raw inventory data at the various U.S. Army depot storage activities.

b. Visibility Information Storage Tool for Ammunition (VISTA) is an interface to enable users to access SDS data in a user-friendly web-based format. It is commonly used by Army plant and depot personnel, Army, U.S. Marine Corps (USMC), USAF, Navy Headquarters (HQ) and NAVSUP GLS AMMO personnel. VISTA is maintained by the Defense Ammunition Center (DAC). The SDS data is updated nightly. It requires a password and login ID. It can be accessed at https://www2.dac.army. mil/vista.vistalogin.asp for users with .mil or .gov registered IP addresses, or at https://www4.dac.army.mil/vista/vistalogin.asp for users with an at .com or not registered IP addresses.

c. Ammunition Stockpile Reporting Program (ASRP) is in use at the Joint Munitions Command (JMC), Rock Island, IL. It has world-wide coverage fed from the SDS. It is similar to VISTA such that it provides a user-friendly interface to access the SDS data. However, it has a broader functional capability than what is available from VISTA. ASRPs SDS data is also updated nightly.

d. Commodity Command Standard System. This is the headquarters level management system similar to OIS-W. The system resides at the JMC, Rock Island, IL, and communicates electronically with OIS-W through DAAS on SMCA assigned ordnance located at SMCA activities.

CHAPTER 12.2

Allowance Lists

Table of Contents

Paragraph	Subject	Page
12.2.1	General	12-2-1
12.2.2	Types of Allowances	12-2-1
12.2.3	Global Naval Ordnance Positioning Plan	12-2-3
12.2.4	Applicability of Allowance Lists	12-2-4

CHAPTER 12.2

Allowance Lists

12.2.1 General.

12.2.1.1 Background. U.S. Navy combatant ships are constructed to accomplish specific missions which include certain capabilities such as antisubmarine warfare, anti-air warfare, and surface-to-surface warfare. Based on the armament and weapons systems selected by the Ships Characteristics Improvement Panel to accomplish the required mission, and the CNO guidance for minimum rounds per weapon or per ship and type ratios (projectile/powder mix), the Type Commander (TYCOM), Commander Naval Surface Forces (CNSF) or the Major Claimant sends an ammunition allowance establishment message to NAVSUP GLS AMMO. A provisional allowance list is prepared by NAVSUP GLS AMMO and distributed for validation. This is done 60 days prior to the end of construction for surface ships and 60 days prior to the completion of the fitting out period for submarines.

12.2.1.2 Purpose. The allowance lists represent a portion of the Fleet combat requirements developed during the DOD Munitions Requirements Process (MRP) described in Department of Defense Instruction (DODI) 3000.4. The prime purpose is to specify the individual command's portion of the combat ordnance requirement to meet the assigned threat. The requirements determination process, described in Section 8-3, builds on this, along with other factors. The secondary purpose, used along with the annual NCEA, is to provide the NAVSUP GLS AMMO IM with a control tool to authorize or deny requisitions received from the Fleet.

12.2.2 Types of Allowances.

12.2.2.1 NAVSEA Allowance Lists (30,000 series). An individual allowance list is prepared for each ship in the active and reserve Fleets, for certain Fleet groups, detachments, units and shore activities, and for Advance Base Functional Component (ABFC) (U.S. Naval Construction Force) initial outfitting. NAVSUP GLS AMMO loads the Naval Sea Systems Command (NAVSEA) 30,000 series allowance data in the NAVSUP GLS AMMO OIS-W. As changes and adjustments to service allowances occur, revised NAVSEA Allowance Lists are suffixed to indicate revisions (e.g., the first revision to NAVSEA List 31,000 is 31,000A). Separate allowance lists called cargo load or mission load allowances are issued for ships that carry ordnance in support of other Fleet units. Cargo and mission allowance quantities are determined by Commander Fleet Forces Command (CFFC) and their TYCOMs, e.g. CNSF and other Major Claimants. The various allowance lists are described as follows.

a. Shipfill Allowance Lists - NAVSEA Lists 30,000 through 33,999 series. An approved war allowance of ordnance required to support:

(1) Ship's own permanently installed armament.

(2) Ship's authorized small arms weapons.

(3) Ship's distress and signaling pyrotechnic requirements.

b. Shipfill allowance lists contain full wartime allowances of service ordnance designed to fill the ship's magazines to capacity, without regard to ordnance item availability in stock.

c. Provisional Allowance Lists - NAVSEA Lists 30,000 through 33,999 series. A provisional allowance list is a preliminary listing of an initial shipfill allowance of service ordnance prepared and forwarded to the ship and the TYCOM (appropriate "Forces" Command e.g. surface, air, or submarine) by NAVSUP GLS AMMO for validation of compatibility with armament systems and stowage capability. Shipfill allowance lists replace provisional allowance lists after validation by the Fleet Commanders.

d. Cargo Load Allowance Lists - NAVSEA Lists 34,000 through 34,999 series. An approved listing of ordnance (all Cognizance (COGs)) carried as cargo for Underway Replenishment (UNREP) issue to support other Fleet units. Cargo load allowances are for Military Sealift Command (MSC) ships, e.g., Ammunition Ships (TAEs), and are issued as a separate and additional list to the MSC ship's own shipfill allowance.

e. Mission Load Allowance Lists - NAVSEA Lists 34,000 through 34,999 series. An approved war allowance listing of ordnance to be carried in support of special support/operational requirements of Aircraft Carrier, Nuclear (CVNs) for aircraft squadrons based aboard, and by Submarine Tenders (ASs) for submarines assigned. Mission load allowances are issued for aircraft carriers, maritime pre-positioned ships, amphibious warfare ships, and submarine tenders as separate and additional lists to their shipfill allowance lists. The mission load includes Special Warfare, Explosive Ordnance Disposal (EOD), or U.S. MC Loads.

f. Service/Miscellaneous (Fleet Activity) Ordnance Allowance Lists for Fleet Groups, Detachments, Teams - NAVSEA Lists 38,000 through 39,999 series. A listing of full war allowances authorized to an activity (shore station) for its own use based on the armament and mission of the activity. Typical Fleet elements and activities with service allowance lists are:

(1) Explosive Ordnance Disposal Groups (EODGRUs).

(2) Explosive Ordnance Disposal Detachments (EODDETs).

(3) Mobile Construction Battalions.

(4) Beach Master Units (BMUs).

(5) Naval Security Group Activities.

(6) Naval Communications Stations.

In some cases, such as for Amphibious and Mobile Construction Battalions (ACBs and MCBs), sufficient ordnance for a number of days support is included in the allowance to provide for deployment to remote areas with no nearby source of replenishment. Fleet elements deployed to forward or remote areas will retain custody and provide storage for the ordnance in their service allowance. Fleet elements on deployment to theaters with nearby Navy ordnance storage activities should store their ordnance at these activities as reserved stocks. Service allowance ordnance for deployable elements in CONUS may be pre-positioned at nearby Navy ordnance storage activities for outloading on deployment, or pre-positioned at activities in the theater assigned.

12.2.2.2 Allowance Change Request Procedures.

a. As platforms, armaments or weapons systems change, it becomes necessary to modify existing NAVSEA 30,000 series allowance data. Per Commander Naval Supply Systems Command (NAVSUP) P-724, Fleet units or other holders of the allowances submit requests for changes as the need arises. Allowance change requests are processed the same regardless of the type of allowance list. All Fleet or activity NAVSEA 30,000 series allowance change requests are submitted to NAVSUP GLS AMMO via the operational chain of command, including CFFC, with parallel distribution to the appropriate Acquisition/Program Manager and Naval Surface Warfare Center (NAVSURFWARCEN) Crane Division for any 2T COG Conventional Surface Weapons items. Confidential Naval message format is used for the submission of allowance change requests. The request includes the Unit Identification Code (UIC) of the unit requesting the change, Navy Ammunition Logistics Code (NALC), Activity Classification Code (ACC) requested, quantity (current and revised) and justification for the allowance change. The message is addressed to the unit's immediate superior in command, with an information copy to NAVSUP GLS AMMO and NAVSURFWARCEN Crane Division. NAVSUP GLS AMMO is included as an information addressee on all allowance correspondence for tracking and approval purposes.

b. Fleet tailored allowances are temporary modifications to the NAVSEA 30,000 series combat allowances based on theater commander and specific operational requirements. It is the responsibility of CFFC to establish, maintain, monitor and delete these allowances in OIS-W when no longer required. NAVSUP GLS AMMO will assist in monitoring and deleting Fleet tailored allowances.

12.2.3 Global Naval Ordnance Positioning Plan.

a. Naval ordnance positioning, planning and execution embodies a global perspective evolving and expanding in concert with development of a joint Navy/Marine Corps model identified as the GNOPP. Per Appendix E, the GNOPP provides for distribution of ordnance to forward and CONUS sites based on Defense Planning Guidance and assessments of the most likely Major Theater War or Small Scale Contingency scenarios. The GNOPP considers storage capacities, most efficient resupply of supported warfighters, and minimization of strategic lift requirements.

b. The GNOPP is the authorized Naval ordnance positioning process. The GNOPP process model is governed by business rules/planning factors (shipfill, training, shore-based units, resupply) that prioritize and allocate available ordnance by mission and purpose. The CFFC and Marine Force (MARFORs) Commanders are responsible for the GNOPP methodology and consolidation of warfighter, i.e. service components, inputs. The GNOPP model is managed by the NAVSUP GLS AMMO based on these inputs. The GNOPP will be issued annually as a 2-year plan in a formal Memorandum of Agreement (MOA) that is approved by CNO (N3/N5, N4) and Commandant of Marine Corps (CMC) (A, CS Avn, PPO) by 30 September each year. The business rules can be modified to allow changes to global distribution as required by Operations Plan (OPLAN)/Contingency Plan (CONPLAN) revisions.

12.2.3.1 Chief of Naval Operations.

a. Establishes the basic operational missions' capabilities for all active and reserve ships, Fleet groups, units, detachments, teams and shore activities.

b. As system improvements evolve, approve the upgrade of existing ships' capabilities.

c. Provides quantitative and type ratio (projectile/powder mix) guidance for ordnance to be included in shipfill and activity service allowances.

12.2.3.2 CFFC and MARFORs.

a. Submit to NAVSUP GLS AMMO, proposed changes to 30,000 series allowance lists for shipfill, mission loads, and cargo loads based on CNO approved combat requirements.

b. Develop tailored allowance lists from which afloat activities will submit requisitions to meet Unified Combatant Commander requirements.

12.2.3.3 Approval and Processing of Allowance Change Request Procedures.

a. Upon receipt of allowance change requests and endorsements thereto, NAVSUP GLS AMMO reviews the package for required updates based on all endorsements, verification of current NALC and associated components, and quantity in accordance with unit pack.

b. When the NAVSUP GLS AMMO review is completed, the changes are made to OIS-W and a message is prepared to release an updated allowance list with a new revision letter and date, via confidential Naval message to the originator and the appropriate chain of command.

12.2.3.4 Program Executive Officers (PEOs)/Program Managers (PMs). Ordnance PEOs/PMs will validate the portion of the allowance list covering their ordnance, when received from NAVSUP GLS AMMO for review. They will also include substitutes, alternatives, and preferred configurations as well as consider unit pack.

12.2.3.5 Fleet Units and Shore Activities.

a. Fleet ships validate their provisional allowance lists and advise NAVSUP GLS AMMO of any discrepancies between allowance items and installed armament, and any deficiency in capability to properly stow allowance quantities in ship's magazines.

12.2.4 Applicability of Allowance Lists.

12.2.4.1 General.

a. Shipfill Allowances. Shipfill allowances provide the ship with a supply of preferred ordnance in support of the ship's mission. Allowances should contain maximum quantities consistent with ship's magazine capacity, to ensure maximum sustainability without replenishment.

b. Service ordnance authorized for expenditure to meet NCEA should be used from the onboard service ordnance allowance. It should be replenished in accordance with CFFC policy, and their TYCOM, directives, thus rotating stocks.

c. Ordnance designed for training only, such as Variable Time (VT) - Non-fragmenting projectiles or Target Practice (TP) projectiles, are excluded from service ordnance allowances. Exceptions to this are certain dummy projectiles and charges for cycling mounts that are part of a ship's permanent equipment, and TP rounds for firing through muzzle covers. Training ordnance for NCEA should be loaded aboard in addition to, or in place of, service ordnance prior to an exercise or demonstration, and replaced with service ordnance in accordance with CFFC and their TYCOM, directives.

d. Service Ordnance Allowances for Fleet Groups, Detachments, Teams, etc. Service allowances for these Fleet elements are generally predicated on a mission scenario basis, in terms of rounds per day.

e. Service Ordnance Allowances for Activities Ashore. These allowances are based on amounts required to perform the task (i.e., sufficient destructors/destroyers for the equipment and documents to be destroyed, or ordnance per weapon to be used by civilian or military guard force).

f. Cargo Load and Mission Load Allowances. These are developed by CFFC and their TYCOMs, initially on commissioning of the ship and are promulgated by NAVSUP GLS AMMO as NAVSEA 34,000 series lists. NAVSEA cargo and mission load allowances are standard loads used for planning purposes (i.e., for prepositioning standard loads and for mobilization planning). Changes required by CFFC to NAVSEA cargo and mission allowances for mobilization planning purposes are made by formal request to NAVSUP GLS AMMO for a NAVSEA List back to their interim allowances or 30,000 series allowances. Tailored allowances are promulgated by CFFC and the TYCOMs, not to exceed the normal six month deployment of units.

g. Shipfill, Cargo, and Mission Load Tailored Allowances. Fleet tailored allowances are temporary modifications to the NAVSEA 30,000 series combat allowances based on theater commander and specific operational requirements. It is the responsibility of the authorized Fleet Commander (FLTCOM) to establish, maintain, monitor and delete these allowances in OIS-W when no longer required. NAVSUP GLS AMMO will assist in monitoring and deleting Fleet tailored allowances. Affected units may submit requisitions against Fleet tailored allowance quantities.

12.2.4.2 Requirements Determination for Acquisition (see Chapter 8.3).

a. Shipfill allowance lists contain the full range of level-of-effort service ammunition and threat-oriented service weapons for ships' installed armament, and assigned weapons in amounts to fill the ships' magazines to capacity without regard to ordnance availability. These allowance quantities may be considered as each ship's long-term notional combatant shipfill. Shipfill allowance quantities are used in the determination of requirements for the Programming Objective for all ordnance items not covered in the Non-Nuclear Ordnance Requirements (NNOR) and the Secretary of Defense (SECDEF) Defense Planning Guidance. Primarily, these are medium caliber, pyrotechnic, demolition, and small arms and landing party ammunition items.

b. Service ordnance allowances for groups, detachments, teams, and activities are used for determining Programming Objective requirements to the extent that these deployable activities are included in OPLANs.

12.2.4.3 Requisitioning Guide and Readiness Baseline.

a. All shipfill allowance lists that have not been modified by a tailored allowance issued by CFFC, and the TYCOMs, may be used as requisitioning guides for obtaining an initial outfit on-load upon completion of restricted availability or allowance replenishment.

b. In the absence of a tailored allowance, the shipfill allowance list is the baseline reference point for comparison of onboard inventory to determine the current readiness state. For mobi-

lization planning purposes, shipfill, cargo, and mission load 30,000 series allowance lists are used to determine readiness state. Any shortfall to these allowance quantities is termed a "Top-Off" requirement.

c. Cargo and mission load allowances are also used as requisitioning guides. Cargo and mission loads may have as many as two allowances - tailored or NAVSEA 30,000 series. Requisitioning should be based on the tailored allowance or, when directed by CFFC, and the TYCOMs, on the NAVSEA 30,000 series allowance list. CFFC/TYCOM tailored allowances may contain NCEA ordnance.

d. Determination and reporting of the state of readiness is to be accomplished using tailored, or NAVSEA 30,000 series allowance lists, in that order, or as directed by CFFC. Upon mobilization, the NAVSEA lists will be used to determine top-off requirements for level-of-effort items.

CHAPTER 12.3

Cataloging and Item Identification Systems

Table of Contents

Paragraph	Subject	Page
12.3.1	Federal Catalog System	12-3-1
12.3.2	DOD Identification Code System	12-3-9

CHAPTER 12.3

Cataloging and Item Identification Systems

12.3.1 Federal Catalog System.

12.3.1.1 General.

a. The FCS is a commodity classification system designed to identify, describe, classify, and record all items entering the federal supply system. The FCS is mandated by Title 10, United States Code. DOD 4100.39-M, Federal Logistics Information System http://www.dlis.dla.mil/flis_procedures.asp sets forth the Federal Catalog Program Policy and responsibilities for implementing the FCS, and outlines its objectives.

(1) Provide a uniform system of item identification that describes, classifies, and numbers each item in the FCS that it is identified by a single National Stock Number (NSN).

(2) Enhance the operational readiness of DOD organizational components by improving methods of item identification, by improving processing efficiency, and by providing accurate and timely publication of catalog data.

(3) Provide the means for monitoring the range and numbers of items entering the supply system in order to prevent their proliferation and ensure that management systems can operate with the minimum number of items essential to support.

(4) Assemble and maintain integrated cataloging records which include the characteristics and selected technical and material management data for each item of supply.

(5) Record and maintain item interchangeability and substitutability information.

(6) Promote accessibility and interchange of FCS data in DOD and with other federal departments and agencies and participating North Atlantic Treaty Organization (NATO) and non-NATO Countries.

(7) Ensure the optimal level of cataloging systems computability and integration with the mission needs and data requirements of the various DOD organizational components and other FCS participants.

b. DOD 4100.39-M assigns the responsibility for the management and administration of the FCS to the Director, Defense Logistics Agency (DLA). These responsibilities include the development, review, approval, and uniform implementation of the FCS operating principles, rules, and procedures; the establishment of an automated information system; and the development and publication of documentation required to operate the FCS. The Defense Logistics Information Service (DLIS) http://www.dlis.dla.mil, in Battle Creek, Michigan, is the central repository for the cataloging records pertaining to all items of supply stocked in the DOD supply system.

c. All processes, services, and publications relating to the cataloging functions of item management are subject to the policy direction contained in DOD 4100.39-M. The logistic functions

addressed by the FCS include item identification, design standardization, item entry control, supply, maintenance, material planning, provisioning, procurement, preservation, and packaging, transportation, warehousing, and disposal. Thus, the FCS provides the basis for a universal language of supply by establishing standard rules for identifying and describing all items of supply.

d. To accomplish the objectives outlined in subparagraph a, the various supply commodities are organized into groups, with classes within each group. Each two digit numerical Federal Supply Group (FSG) identifies, by title, the broad commodity area of the individual classes comprising the group. Each class represents a family of items of supply that are relatively similar in their physical or performance characteristics or which are combined for supply management purposes. The DLA cataloging handbook (found thru the DLIS http://www.dlis.dla.mil/hardcopy.asp), H2, Federal Supply Classification Groups and Classes, lists the classes in FSG 13, Ammunition and Explosives. Each item of supply shall be classified in one, and only one, four-digit class of the FSC code. The assignment of an FSC code number to an item of supply shall not be influenced by the method and type of item identification used to establish the concept of the item.

e. For general reference, items within a common grouping or class are collectively referred to by the items' group and class. A significant application of the four-digit FSC code is its use in structuring the NSN. The 13-digit NSN identifies a specific line item of supply, and is configured in the following manner:

1305-00-892-2150

(1) Federal Supply Classification. A four-digit code comprising the item's federal supply group and class (e.g. 1305, 1310, 1315, 1320 etc.).

(2) NATO Code. A two-digit number code which identifies the NATO country assigning the stock number and/or which indicates that the item is produced by a country other than the country assigning the stock number. For ordnance this code is almost uniformly "00" or "01" which indicates U.S. production and cataloging cognizance.

(3) National Item Identification Number (NIIN). A nine-digit non-significant number that uniquely identifies an item of supply. The NIIN includes the NATO code and is the primary sequencing element of the NSN. Many catalogs, documents, and listings are in NIIN sequence.

f. NSNs are assigned to all items of supply which are centrally managed or procured for supply system stock. New items entering the supply system are generally processed in time to permit assignment of NSNs by DLIS prior to their shipment from producers or suppliers. In circumstances where NSN assignment is delayed and it is necessary to assign a temporary or expedient means of identification, a Navy Item Control Number (NICN) may be assigned by the NAVSUP GLS AMMO. Frequently NICNs are assigned to items for which contractor delivery must be expedited prior to completion of the stock numbering process. They are also assigned to items undergoing development or evaluation or to items awaiting disposal or other action under conditions where the NSN cannot be determined. NICNs are temporary, pending NSN assignment, and therefore are not included in the DLIS files. However, those that are assigned by NAVSUP GLS AMMO are included in the OIS-W and reflected in the Navy Stock List NAVSUP P-803. Examples of the NICN as listed in section 2 of the stock list are as follows:

CODE*	NIIN	FSC	COG
LL	AM2-0051	1305	2T
LL	AM2-0062	1376	2T
LL	AM2-0103	1305	0T
LL	AM6-0055	8105	2T

*Code LL indicates that the number is locally assigned.

12.3.1.2 Cataloging Responsibilities.

a. Commander Navy Supply Systems Command (NAVSUP) is responsible for performing the headquarters cataloging staff functions defined in DOD 4100.39-M and for providing staff support on cataloging matters common to the Navy and Marine Corps. This assignment includes developing, implementing, maintaining, and administering the NAVSUPs cataloging policy. NAVSUP provides the program direction for automating cataloging systems and procedures. It is the Navy's primary representative in coordinating the Navy support of DLA in developing the standard operating policies, regulations, procedures, and schedules required to implement, operate, and maintain the FCS. As necessary, NAVSUP recommends to DLA new or revised management techniques and procedures to improve Navy interface with FCS policies.

b. PEO/PM.

(1) Applies the established cataloging policies to the management of non-nuclear ordnance under their cognizance and generates the cataloging data required by the PMs checklist to NAVSUP P-724.

(2) Initiates, coordinates, and monitors the stock numbering of newly introduced ordnance items as directed by NAVSUP P-724.

(3) Assures that any new explosives are final (type) qualified, per NAVSEAINST 8020.8, prior to use.

c. Naval Ordnance Safety and Security Activity (NOSSA) is the Navy's Hazard Classifier for ammunition, explosives and related hazardous materials. Ammunition and Explosive Hazard Classification Procedures are explained in NAVSEAINST 8020.8.

(1) Assigns the hazard classification, UN number, proper shipping name, and storage NEW based on the data submitted by the PEO/PM. The data required is specified in the hazard classification section of the PMs checklist.

(2) Forwards the above information to the other Services and the DOD Explosive Safety Board (DDESB) for concurrence and forwarding to the Military Surface Deployment and Distribution Command (SDDC), then on to the Department of Transportation (DOT) for approval and assignment of an EX number. See Section 13-1 for additional information.

(3) Enters the hazard classification, UN number, proper shipping name, storage NEW, and EX number into OIS-W.

d. Packaging, Handling, Storage and Transportation (PHS&T), NAVSEA Indian Head Detachment, Earle, NJ, is the Navy's agent for ordnance PHS&T documentation and information.

(1) Validates accuracy of storage, Performance Oriented Packaging (POP), and shipping catalog data.

(2) Enters the appropriate data on new ordnance items into their Explosives Safety Technical Manual System (ESTMS) for the next update of the SW020-ACSAF-010.

(3) Updates the NEW, storage, POP, and shipping data as directed by the Hazard Classifier.

e. NAVSUP GLS AMMO is the designated ordnance cataloging agent for the Navy and Marine Corps in obtaining the assignment of NSNs and Department of Defense Identification Code (DODICs) from DLIS.

(1) Obtains NSNs from DLIS for non-nuclear ordnance items.

(2) Assigns NICNs to non-stock-numbered items.

(3) Records the Navy as the Primary Inventory Control Activity (PICA). This includes non-SMCA items and SMCA items not yet transferred or transitioned to the SMCA. The SMCA is the PICA for SMCA items.

(4) Maintains a Master Ammunition File in OIS-W which contains the catalog descriptive data applicable to ordnance stock-numbered items.

(5) Maintains the Navy's master DODIC/NALC file.

(6) Publishes and distributes change notices and change bulletins advising field activities and Army activities of cataloging changes to Navy-owned items.

(7) Disseminates Change Notice Cards (CNCs) to field activities for incorporating safety and transportation data contained in SW020-AC-SAF-010 into the local records.

(8) Publishes and distributes the following cataloging documents:

(a) NAVSUP P-802 NALCs.

(b) NAVSUP P-803 Stock List of Navy Ammunition.

(c) NAVSUP P-804 Stock List of Navy Ammunition Data Supplement.

(9) Performs research, as requested, on unidentified items and advises field activities of their status and disposition.

(10) Registers or withdraws the Navy in the DLIS catalog files as a user of ordnance items.

f. The Defense Logistics Information Service is the designated central repository for the cataloging records pertaining to all items of supply stocked in the DOD supply system.

(1) Assigns an appropriate stock number to the ordnance item submitted by NAVSUP GLS AMMO.

(2) Enters the catalog data, along with the assigned stock number, into their Federal Logistics Information System (FLIS), which is the automated repository for all DOD supply items.

(3) Publishes and distributes the Federal Logistics Catalog (FEDLOG).

(4) Notifies the Services of the new item and its accompanying catalog data.

g. Activities, ashore and afloat, that stock ordnance are responsible for incorporating all cataloging changes to the OIS-W files, into their local stock records. These changes are provided in change notice cards and change notice bulletins issued by NAVSUP GLS AMMO. They

include SW020-AC-SAF-010 unique changes for ordnance pamphlet data, transportation data, unit of issue update, packaging data, and supply information updates as reflected in specific change notice codes.

12.3.1.3 NAVSUP GLS AMMO Form 724/6 (7/04). This form is prepared by the PEO/PM for each new ordnance item entering the Navy inventory as described in NAVSUP P-724. Applicable drawings and other documentation are submitted as enclosures to the form. Each data element, indicated on NAVSUP GLS AMMO Form 724/6, is mandatory since completeness and accuracy in identifying an item are critical at the time of initial cataloging, when such information is more likely to be readily available. Activities with on-hand inventories are dependent on up-to-date OIS-W cataloging data for supply, packaging, and transportation information relative to newly introduced items under their management. The end result of thorough and accurate initial item entry data is the assurance of a valid database for user reference. Upon completion of processing the NAVSUP GLS AMMO Form 724/6 Request Form, it is returned to the originator by NAVSUP GLS AMMO, with the assigned NSN or NICN.

12.3.1.4 Item Development and Transition. Newly introduced ordnance items usually undergo an Research Development Testing & Evaluation (RDT&E) phase leading to Approval for Full Production (AFP). SMCA items that are developed and introduced by the Navy are managed by the Navy, pending transfer to the SMCA. This transfer is in accordance with formal transitioning agreements and RDT&E interface policies and procedures stated in DOD 5160.65-M. During the item's development, Navy liaison is maintained with the Armament/Munitions Requirements and Development (AMRAD) Committee which is responsible for providing standardization guidance, ensuring that newly introduced ordnance items meet the common needs of the Services and provide interoperability with items used by NATO. Committee interest generally begins when a Service establishes ordnance requirements and the item enters advanced development. At this stage it is the developing Service's (Navy) responsibility to obtain an NSN from DLIS, and take action to record the Navy as PICA. (If the item is to be transitioned to the SMCA, the SMCA will initiate action to record itself as the PICA and the "Introducing Service" (Navy) as the Secondary Item Control Activity (SICA) at the time the item is transferred to the SMCA). When a stock numbered item is transitioned to the SMCA, NAVSUP GLS AMMO provides the Joint Munitions Command with the supply and technical cataloging data required by DOD 5160.65-M.

12.3.1.5 Unidentified Ordnance Items. Field activities occasionally receive (usually as rollback or user turn-in) or discover items with obsolete NSNs, or items for which NSNs or other identifiable information is not found. To ensure accountability, such items are temporarily identified and recorded in the local ordnance management system records. Prompt action is taken to obtain identification and disposition directions from the central IM. Stock numbers assigned at the local level are strictly temporary, are not incorporated into the OIS-W, and do not enter into the cataloging system. If the item cannot be identified to an existing NSN, a former NSN or used by another program, and the item value is determined to be greater than $1000.00, the Acquisition/Program Manager or designated agent will submit NAVSUP GLS AMMO Form 724/6 to NAVSUP GLS AMMO in accordance with NAVSUP P-724. Unidentified material with an estimated line item transaction value of less than $1000.00 may be appropriately disposed of locally without NAVSUP GLS AMMO involvement. Otherwise, pending identifi-

cation and disposition instructions from NAVSUP GLS AMMO, the unidentified item(s) is assigned an interim stock number constructed in the following format.

a. Items identified to a deleted NSN: Local stock numbers for items identifiable to a deleted stock number will be established using the deleted number.

b. Items which are identified by drawing, part, or sketch number only.

(1) The first four digits will be the appropriate FSC.

(2) The next 9 digits will contain the drawing or part number preceded by zeros. There will be no blanks in the stock number.

Example:

Drawing/ Part Number	Assigned Local Stock Number
P/N 178598	1336-00-017-8598
P/N 76Z2843-2	1336-07-6Z2-8432
DWG 2513736RevC	1336-02-513-736C

c. Local stock numbers for items which cannot be identified to a deleted stock number, drawing number or part number, or where the drawing or part number has too many digits will be assigned as follows:

(1) The first four digits will be the appropriate FSC.

(2) The next nine digits will be assigned in sequence using a locally controlled number beginning with 000000001.

Example:

Item ..... Drawing/Part Number
Igniter, Electric P/N 25-SA000AN28BR

Local Stock Number:
1377-00-000-0001

Item ..... Drawing/Part Number
Spotting Charge Bomb CXU-2/B None

Local Stock Number:
1325-00-000-0002

d. In each of the above, it is essential that 13 digits (alphanumeric), grouped and hyphenated as shown (with no blanks), are included.

e. Upon return from NAVSUP GLS AMMO of the annotated NAVSUP GLS AMMO Form 724/6, the following actions are taken, as appropriate:

(1) Disposal authority provided. Process in accordance with the directions contained in the Disposal Release Order (DRO).

(2) Valid NSN provided.

(a) Delete the assets shown under the local stock number by processing a reversal transaction using the same Document Identifier Code (DIC) and document number used for the original receipt transaction.

(b) Using the same DIC and document number, process a receipt transaction gaining the assets under the NSN provided by NAVSUP GLS AMMO.

12.3.1.6 The Stock List of Navy Ammunition. The Stock List of Navy Ammunition, NAVSUP P-803 provides the U.S. Navy and Marine Corps activities afloat and ashore with a complete listing of ordnance, components, and related equipment. The stock list is published and maintained by NAVSUP GLS AMMO as directed by NAVSEA (for surface ordnance) or by the Naval Air Systems Command (NAVAIR) (for air ordnance). All requests for changes to the list or to its distribution are directed to NAVSUP GLS AMMO. The Stock List of Navy Ammunition consists of five sections.

a. Section One. This section is arranged in DODIC/NALC sequence and excludes items to which DODICs or NALCs are not assigned. The data contained in Section 1 is displayed with the following column headings.

(1) DODIC/NALC. Self-explanatory.

(2) COG. The two-digit cognizance symbol which indicates the broad category of the ammunition item (2T, 8T, or OT), and the ICPs or IMs, as appropriate, having technical and inventory control.

(3) MCC. The Material Control Code is a one character alpha code used as follows:

Code	Definition
B	An item requiring lot number reporting.
C	An item requiring serial number reporting.
E	An item requiring both lot number and serial number reporting, but which is reported by serial number only.
K	An item requiring periodic lot reporting.

(4) FSC and NIIN. The FSC and NIIN together constitute the NSN of the item.

(5) Index Number. A semi-significant, six-character, alphanumeric number assigned to an item. The first character represents its Navy ordnance class; the remaining five digits are arbitrary. (Examples of class indicators are A - bombs and bomb components; B - military pyrotechnics; L - Marine Corps ordnance; R - gun ammunition over 4 inch; T - surface launched guided missiles and components.) The index number is used to sequence items within their respective classes, as in Section 3 of the stock list.

(6) Item Name and Description. Nomenclature of the item, noun name, modifiers, MK and Mod, series/type, etc.

(7) Reference Number. The drawing, standard, specification, or part number used to identify the item.

(8) UI. The item's Unit of Issue.

(9) Price. The item's unit price in terms of its unit of issue (procurement price).

(10) Weight. The prorated weight of the item in pounds (i.e., the bare item weight plus its packaging or share thereof). Note: This weight information is not to be used for ballistic computations.

(11) Cube. The volume of the item in cubic feet.

(12) MOE (Management Organization Entity) Rule. A four-digit cataloging code which reflects the PICA/SICA relationship and responsibilities for data collaboration between managers and users. For example, A901 indicates U.S. Army as the PICA, N2T4 would indicate that NAVSUP GLS AMMO is the PICA.

(13) SEC. A one-digit code which indicates the item's security classification (U, C, S or T). For sensitive items that are classified and weigh less than 100 pounds, this code is numeric and is defined to combine the security and sensitivity classification of the items. Unclassified pilferable items are coded P.

(14) DEM. Demilitarization code assigned to an item in accordance with NAVSUP P-485, Appendix 17. This is a single character alpha code assigned to an item identifying it as a Munitions List Item (MLI) or a non-MLI and defining the degree of demilitarization necessary prior to final disposition.

(15) IRC. Issue Restriction Code, a two-digit alpha or alphanumeric code indicating restrictions applicable to item issue or instructions for item requisitioning, turn-in, or exchange. A complete listing is contained in NAVSUP P-485.

(16) SOS. Source of Supply of the item as indicated by the activity's three-digit routing identifier code (e.g., code NCB indicates NAVSUP GLS AMMO as IM for ordnance).

(17) SLC - Shelf-Life Code, a one-character code denoting the period of time (beginning with date of manufacture) that the item is expected to remain suitable for issue and use. At the expiration of this time, the item should be referred for test or disposition instructions.

Examples:

Type I	Type II	Shelf-Life Period
A	N/A	1 month
B	N/A	2 months
S	9	60 months
0	0	Non-deteriorative
K	5	18 months

An alpha code denotes items for which shelf-life cannot be extended. A numeric code denotes items for which shelf-life can be extended. A complete listing of shelf life codes is contained in NAVSUP P-485, Appendix 9.

(18) SLAC. Shelf-Life Action Code, an alpha or alphanumeric assigned to a shelf-life item to specify the type of inspection, test, or restorative action to be taken when the item has reached its storage shelf-life limit.

Examples:

Code	Description
00	Non-deteriorative
C1	Incorporate all mandatory changes
L0	To be tested by the laboratory or activity in increments after the initial time limit has expired.

The complete listing of SLACs is contained in NAVSUP P-485, Appendix 9.

b. Section Two. This section is arranged in NIIN sequence and contains data identical to that described for section one. However, this section includes all items, irrespective of DODIC/NALC assignment. In addition to centrally cataloged items, section two lists items to which NICNs have been assigned by NAVSUP GLS AMMO.

c. Section Three. This section arranges items in Navy class groups by index number sequence to facilitate reference. Data coverage is identical to that in sections one and two.

d. Section Four (Data supplement). This section provides detailed characteristics of the items cataloged in section two except for items under index codes F_____ and Y_____ (smokeless powder and ordnance production components, respectively). Items are listed in NIIN sequence. The information consists of data derived from technical publications, specifications, and drawings. Also included are configuration data, cube and packing density, and applicable palletized unit codes. Section four has a separate and limited distribution and is available from NAVSUP GLS AMMO on request citing justification of need.

e. Section Five. Section five provides information on each item's NEW, in DODIC/NALC sequence. Five different environmental situations are portrayed to provide ordnance handling personnel with the NEWs for storage, waterfront, production, shipboard, and transportation under varying conditions.

12.3.2 DOD Identification Code System.

12.3.2.1 General. In ordnance, certain end items and major assemblies fall into generic groupings, in terms of their close physical and functional relationships and interchangeability. For management convenience, these groupings are assigned DODICs or NALCs, which may embrace one or more NSNs. For example, a 5-inch 38-caliber projectile has the assigned DODIC D249 which includes distinct NSNs, differing solely in the color of their explosive bursts. Similarly, a 16-inch .50 caliber projectile may have several stock numbers dependent on the dye color upon impact; however, these stock numbers are grouped under the single DODIC D862.

12.3.2.2 Identification Numbers. The following numbering systems group and identify ordnance end items and major assemblies. They will be assigned to all ammunition items that are centrally managed or procured for system stock. Acquisition/PMs, or designated agents will initiate a request for either a DODIC, NSN/NALC or NSN using the procedures described in NAVSUP P-724.

a. DODIC. Department of Defense Identification Code is a four-character alphanumeric code consisting of one letter followed by three numbers (i.e. A072) assigned to a generic description within a FSC. Whenever the same DODIC is used as a suffix on two or more NSNs, the items

are interchangeable as to function, issue, and use. DODICs are assigned by the DLIS. Items that are assigned a DODIC are normally common items used by more than one military service.

b. DODAC. Department of Defense Ammunition Code which includes the FSC in addition to the assigned DODIC. The DODAC is an eight-character number divided into two parts by a hyphen. The first part consists of the item's FSC (e.g., 1305), and the second part consists of the DODIC (e.g., A011).

c. NALC. NAVSUP GLS AMMO assigned four-digit code consisting of alpha and numeric codes. The NALC is similar to a DODIC, except for its assignment by NAVSUP GLS AMMO vice DLIS.

12.3.2.3 Control Numbers. Control Numbers form an index that portrays Complete Round ordnance items identifying end item NALCs through a top down breakdown to all subordinate NALCs/NSNs that satisfy the operational needs for weapons for which requirements are established in the NNOR.

a. For management purposes, four-digit control numbers are devised to isolate and identify end items by end-item configuration, functional commonality, etc.

b. A simplified example of grouping by control number is presented.

Control Numbers	Applicable DODICs/NALCs
ZPL1	D226, D228, D232, D233
ZPM1	D226, D232
ZPN1	D228, D233

In the example, control number ZPL1 groups all DODICs which apply to 5"/38 VT projectiles. Control numbers ZPM1 and ZPN1 provide further differentiation by dividing the DODICs into distinct groups as to "self-destructing" and "non-self-destructing". A control number includes one or more end-item DODICs or NALCs within such groupings to achieve the homogeneity and degree of commonality desired. In effect, grouping by control number represents a tailored packaging to achieve general performance and mission support capabilities.

c. Control numbers are assigned by NAVSUP GLS AMMO and incorporated into OIS-W for retrieval in preparing tailored asset and other reports. They undergo changes as new DODICs or NALCs are assigned, old ones dropped, or as combinations may be directed by CNO or the PM. Stratification and budget preparation depend on control number grouping for proper presentation.

d. Control numbers are also used to consolidate and present assets of related items, display readiness posture and capabilities, fair share items from production, systematically arrange and display new procurements, show maintenance requirements and schedule assets for maintenance. The Control Number Index is updated monthly and is maintained in OIS-W by NAVSUP GLS AMMO.

12.3.2.4 NAVSUP P-802. This technical manual provides the operating forces and certain SMCA activities with a reference to the DODIC and NALC codes applicable to ordnance and components used by the Navy and Marine Corps. This is a four part reference.

a. Part 1, Section 1, Ammunition items are arranged alphabetically by nomenclature within each of the ammo class.

(1) Part 1. Section 2, Complete Round Components.

b. Part 2. Ammunition items arranged in ascending alphanumeric DODIC or NALC sequence.

c. Part 3. DODIC/NALCs deleted or superseded since last revision are listed.

d. Part 4. Issue Priority Guidance for 2T Ammunition. Comments concerning additions, deletions, errors, or omissions of data contained in NAVSUP P-802, or requests for changes to its distribution list are forwarded to NAVSUP GLS AMMO.

CHAPTER 12.4

Fleet Ordnance Support

Table of Contents

Paragraph	Subject	Page
12.4.1	Ordnance Stock Point Load Plan	12-4-1
12.4.2	Fleet Ordnance Support Management Policies and Procedures	12-4-3
12.4.3	Receipt	12-4-4
12.4.4	Segregation Program	12-4-5
12.4.5	Storage	12-4-7
12.4.6	Physical Inventory	12-4-9
12.4.7	NAVSUP GLS AMMO Responsibilities (Per NAVSUP P-724)	12-4-10
12.4.8	Issue	12-4-11

CHAPTER 12.4

Fleet Ordnance Support

12.4.1 Ordnance Stock Point Load Plan.

12.4.1.1 General. The activity load plan is a valuable tool for shore retail stock points (primary and secondary) to use in determining appropriate stockage levels to properly support Fleet ammunition positioning requirements as well as other customer requirements. Load Plans are developed and issued by the NAVSUP GLS AMMO in accordance with NAVSUP P-724 policy and in conjunction with recommendations provided by host stock points, other customers, and other governing documents.

12.4.1.2 Load Plan Factors. The Fleet Combatant Commanders (FCCs) and other ordnance stock point customer requirements are termed Load Plan Factors. There are 5 Load Plan factors presently in use. Not all Load Plan factors apply to every ordnance stock point. The Load Plan factors are as follows:

a. GNOPP.

b. Maintenance and Production.

c. Other Services.

d. Contractor/Other Activities.

e. Local Community.

12.4.1.3 Load Plan Development.

a. A load plan for the Department of the Navy (DON) ammunition stock-points is developed annually. Ammunition stock-point load plans are developed biannually and reviewed annually. Development and/or review begin six months prior to the load plan year with projected completion and publication prior to the beginning of the new load plan year. Development is performed on the even years and review is performed on the odd years. Activities update their individual station load plan annually.

b. The development process is started during the second quarter of each fiscal year by NAVSUP GLS AMMO coordinating with Fleets, Ammunition stock-points, and Acquisition/PMs, or their agents, to determine the quantities required for Load Plan factors one through five.

c. The Commander, U.S. Pacific Fleet (COMPACFLT) and CFFC provide positioning quantities of ammunition including positioning of required components of All-Up-Rounds (AURs) in support of worldwide Naval positioning based on assets reported in the NAVSUP GLS AMMO OIS-W using the GNOPP Tool as the ordnance positioning decision system.

d. Acquisition/PMs, Ammunition stock-points and Stockpile Managers develop storage requirements for ammunition end-items, components, and explosives to support 12 months of

maintenance workload and/or 12 months of production load, assemble and pack requirements in support of Load Plan Factor two.

e. Ammunition stock-points provide projected commitments for storage space requirements in support of Load Plan Factors 3, 4, and 5 to NAVSUP GLS AMMO by 31 January each year covering requirements projected for the following fiscal year.

(1) In addition, even though Foreign Military Sales (FMS)/Security Assistance Program (SAP) material is not included in these factors, space consideration is given for requirements to temporarily stow a limit amount of FMS/SAP material for up to 90 days. Requirements for temporary storage of FMS/SAP material at either the NMC Detachment activities or Weapons Stations is negotiated between the Navy International Programs Office and COMPACFLT or CFFC.

(2) Additionally, although demilitarization disposal (Ownership Code 2) material will not be stored routinely at Navy ammunition activities, space consideration is given to accommodate this requirement.

f. Prior to the development of recommended ammunition activity load plans and the consolidated master load plan, NAVSUP GLS AMMO evaluates each stock-point's annual load plan input (factor quantities, total quantities) to ensure space availability and compliance with safety requirements. Fleet requirements have first priority for storage space in developing stock-point load plans. Upon completion of this evaluation, recommended load plans are forwarded to Acquisition/Program Managers for review at the NALC family or NSN level.

g. Final activity baseline load plan under the management of the FCCs or other major claimants will be prepared and distributed by NAVSUP GLS AMMO no later than 1 October of each year. Proposed changes required during the year will be review, approved and distributed by NAVSUP GLS AMMO.

h. Once the annual stock-point load plans have been submitted and approved, each stock-point will use the approved load plan annual update as the basis for managing local stock levels, determining proper magazine utilization, planning future facility improvements and maintaining stocking levels in support of the Fleet and other authorized customers. The safety requirement of NAVSEA OP 5 will remain a mandatory consideration.

12.4.1.4 Load Plan Use. The activity's load plan is used separately, or in conjunction with other applicable documents or records, as the activity's official reference document concerning the range and depth of ordnance that is authorized to be stocked at that activity. The FCCs are responsible for implementing the ammunition stocking objectives for primary and secondary storage activities.

a. In support of Fleet positioning requirements, the NAVSUP GLS AMMO generates recommended ordnance movements in support of station replenishment and redistribution requirements necessary to assure compliance with approved load plans. NAVSUP GLS AMMO provides reports that indicate the extent of load plan compliance for each approved load plan citing stock point, ammunition tonnage, percent conformance for each COG and asset ownership. These recommendations can be provided annually during the development year, review year and upon request. The following reports and data products provide the basis to determine the degree of load plan compliance.

(1) A Load Plan Performance Report provides options to select load plan compliance statistics by CC(s), Purpose Code(s), COG(s), Ownership Code(s), and UICs with the ability to sort by COG or UIC.

(2) A Load Plan Attribute Report that provides load plan compliance data for the current fiscal year by month with the ability to select CC(s), Purpose Code(s), Ownership Code(s) and UIC(s).

(3) Load Plan Compliance Graphs that graphically display conformance statistics by month.

(4) Load Plan Performance Measurement Reports indicating required tonnage represented in approved load plans, excess stored inventory tonnage, inventory tonnage in conformance with approved load plans, measure of the tonnage discrepancy between approved load plan requirements and tonnage stored, and conformance statistics.

b. This information can also be used to identify and justify the need for additional magazines, in connection with military construction planning.

c. The load plan is useful to the activity in identifying and requisitioning items for which stockage is authorized. At the NAVSUP GLS AMMO, the activity's load plan is incorporated into OIS-W, and requisitions received by NAVSUP GLS AMMO are monitored by UIC to determine authorization status and/or the need for further justification.

d. When used with other information (i.e., usage, stock status, Fleet and IM directives, etc.), the load plan may signal the existence of local excess. Suspect items discovered in this manner are reported to the IM for verification of continued need or for disposition instructions.

e. The load plan reflects a listing, by DODIC/NALC, of authorized ordnance components.

12.4.2 Fleet Ordnance Support Management Policies and Procedures. The following are management policies and procedures that have application in more than one Fleet Ordnance Support (FOS) process.

12.4.2.1 Ammunition Sentencing Publications (NAVSUP P-805/807) Precepts. NAVSUP P-805 discusses Ammunition Sentencing Publications Precepts as follows: "Items of ammunition, with but few exceptions, are expendable, not consumable items. One effect of this distinction is that ammunition items continue to be a part of the total inventory until they no longer exist. Consumables are not expected to be returned to stock after they have been issued; expendables are so long as any item is a part of the total inventory its condition and status information are necessary elements in the inventory record." The five precepts are as follows:

a. Precept Number 1: Safety, security, inventory accuracy and economy dictate that receipt inspection must be performed at the earliest opportunity and before any other processing.

b. Precept Number 2: Inspection should be limited to those characteristics that are subject to have changed since last sentencing, e.g.:

(1) Environmental deterioration

(2) Shelf/Service life effects

(3) Reclassification

(4) Identification/packaging change

(5) Preparation for use

(6) Physical damage

c. Precept Number 3: The sequence of inspection steps should minimize inspection effort.

d. Precept Number 4: Inspection results should specify the correct CC and Defect Code (D/C) to be assigned.

e. Precept Number 5: Referencing to other documents should be minimal.

12.4.2.2 Ordnance Handling. A major function that occurs in each of the FOS processes is physical handling of the ordnance. Safe handling procedures are specified in the appropriate NAVSEA OPs. Proper use of Industrial Materials Handling Equipment is covered in NAVSEA SW023-AH-WHM-010.

12.4.2.3 Material Condition Codes and Defect Codes. Ammunition CCs shall be as defined in Appendix D of the Ammunition Sentencing Publications (can be viewed at the NAVSUP GLS AMMO website https://www.ois.disa.mil. Users must establish a user account. (After logging in, publications are found under Logistics Services, Asset Profile menu.) D/Cs shall be applied per the specific directions contained in NAVSUP P-805/807. Proper use of CCs and D/Cs is important in assisting the IMs and Technical Managers in proper stockpile management and minimizing acquisition, maintenance, and disposal costs. All ordnance in the inventory will have an assigned CC. For all ordnance except CC A, D/Cs shall be present/entered on the tag/label.

12.4.2.4 Stock Rotation. Retail activity stock levels are prescribed by load plans, which provide the total approved stock level and a breakdown of the specific requirements such as ordnance for shipfills, mission and cargo loads, WRMR, and TTR ordnance. The specific requirements that comprise the total stock level are the maximum levels authorized for the specific purpose, and are not stock reservations. Items listed under WRMR or TTR may be issued to replenish shipfill, cargo, mission load, and WRMR ordnance may be issued to meet NCEA requirements, provided replenishment action is taken. The total approved stock level is considered as available in the selection of ordnance for issue, and its issue is desirable for stock rotation.

12.4.3 Receipt.

12.4.3.1 Material Identification. Material identification upon receipt is entered into automated inventory management systems to assist the ordnance activity in managing the ordnance. OIS activities receipt personnel enter the appropriate data off of the Bill of Lading (BL). The data is then processed by the system and made available to all other activity personnel to properly process the receipted material. For those activities with TAMMS, receipt personnel enter the data from the BL. The system determines the effect of the receipted material on the activity load plan and NEW limits for siting purposes.

12.4.3.2 Receipt Inspection. Received ordnance shipments must be inspected to verify that the condition is as specified on the DD Form 1348. Quality Assurance Department or Quality

Verification Division personnel of primary stock points and qualified ordnance personnel of secondary stock points shall inspect and confirm serviceability, and report discrepancies or damages that have occurred in shipment. Transportation Deficiency Reports (TDRs) or Reports of Discrepancy (RODs) will be submitted.

12.4.4 Segregation Program. Segregation only applies to 2E (Conventional Air Ammunition), 2T (Conventional Ammunition), and Operational Test (OT) (USMC Expendable Ordnance).

12.4.4.1 General. Receipt inspection separates ordnance that requires no additional inspection or processing from that which does. Ordnance sentenced to CC K when the true identification and/or condition of the ordnance is not known and requires further processing, to determine the true identification and/or condition. For ordnance that cannot be adequately sentenced (in terms of actual material condition and identification) by receipt inspection (and other, similar processes), segregation provides a level of sentencing capability that precludes the need to have such sentencing performed as a part of traditional maintenance processes, which are more costly in both time and money. Segregation is an important process in providing an accurate picture of the stockpile condition for the IM and Acquisition/Maintenance PM. The smaller the percentage of the total stockpile in CC K, the better job the IM can do distributing the RFI (Ready for Issue) stock, and the more accurately the PM can manage the acquisition and maintenance programs.

12.4.4.2 Segregation. Fleet-returned ordnance in CC K (undetermined condition) should be expeditiously segregated to permit its take up in stock under its true condition classification. A period of 45 days is the limiting guideline for material in CC K. Activity segregation and exterior maintenance schedules should be in accordance with a priority list promulgated by NAVSUP GLS AMMO. The ordnance segregation process is described in NAVSUP P-805.

a. Ammunition in CC K is identified to its correct DODIC/NALC, NSN, and lot number, and physically separated, if necessary. CCs and quantities listed on the receiving document will be verified and any quantity discrepancies reconciled. All items will be checked for reclassifications listed in NAVSUP P-801 and subsequent NARs.

12.4.4.3 Inspection. Remaining items in all other CCs are inspected as follows:

a. Ordnance packed in hermetically sealed or waterproof containers shall not be opened unless inspection of the container indicates it has been previously opened (broken seal), or that it is damaged or has deteriorated to an extent that the ordnance contents may be affected.

b. Ordnance items normally not packed in containers but protected by ordnance details, such as waterproof protective caps and unpalletized, shall be inspected for proper and complete identification markings and for exterior damage or deterioration.

c. Unit pallet loads of packaged or unpackaged ordnance will not be depalletized unless the seals have been broken. The contents of each pallet load shall be inspected for damage, broken seals, or deterioration without depalletizing.

d. Inspections described above can be conducted on-pier during off-loading. On-pier sentencing, particularly of sealed containers and palletized ordnance should be maximized to avoid build-up of CC K and to reduce turnaround time for ordnance issues.

e. Segregation inspection must be performed in the sequence specified in the applicable governing publication and SOP. The segregation inspection shall also be limited to the characteristics and inspection steps specified in the applicable governing publication and SOP.

12.4.4.4 Classification. Upon receipt, all ordnance whose lots are free of NAR suspensions, and whose CC classification indicated on the DD Form 1348-1 is verified by 100 percent inspection, shall be taken up in stock by reclassification from CC K to the correct CC. For Fleet-returned ordnance with no CCs indicated, the presumption during segregation is that all ordnance items are serviceable CC A. More restrictive CCs are then assigned to lots that have been reclassified by NARs, and to individual ordnance items as the inspection findings warrant. Segregation and reclassification of material held in CC K should be expedited, overriding the NAVSUP GLS AMMO priority list for the current or upcoming FY Maintenance Program. Items with known future demand requirements should be included for rapid turnaround with FOS funds. As a general guideline, a 30-day maximum limit is desired for material in CC K. On the 10th of each month, primary CONUS stock points are required to report amounts of unsegregated ordnance that has been onboard over 30 days.

12.4.4.5 Certification Requirement. Activities, whose quality assurance programs are governed in total or in part by NAVSEA TO300-AM-ORD-010 or NAVSUP P-801/802/803/804/805/807, shall certify the material condition and status CC of all segregated ordnance. Certification shall be executed using an inspection indicator (stamp) or authorized signature on the MIL-STD-129 tag/label. Certification is required for all ordnance (serviceable, suspended, and unserviceable).

12.4.4.6 Ammunition Sentencing Publications Management. NAVSUP GLS AMMO is responsible for the Ammunition Sentencing Publications. The scope of the applicable policies and requirements is such that no single organizational entity has authority over them all. The following general description for content authority applies:

a. Safety and Security: NOSSA is the single technical point of contact for explosives safety and physical security policy and requirements pertaining to Ammunition, Explosives and other Dangerous Articles (AEDA) within and throughout the DON.

b. Quality: Ammunition Acquisition/PMs are the single technical point of contact and authority for all in-service quality requirements and related life-cycle support policies and procedures pertaining to assigned ammunition. The following are directly applicable to the Ammunition Sentencing Publications:

(1) Serviceability Criteria. The PMs have the sole authority to specify ammunition serviceability criteria. These criteria identify specific characteristics and their standard of acceptability, including any tolerance or allowable variation in those standards. Inherent in these criteria is the specification of whether or not unserviceable ammunition can or should be returned to serviceable condition.

(2) Levels of Maintenance Specification. The PMs have the sole authority, through Integrated Logistics Support planning, to specify how maintenance of assigned ammunition will be accomplished.

(3) Reclassification. The PMs have the sole authority to reclassify specific populations of assigned ammunition. Inherent in this authority is the issue of direction to reidentify the am-

munition, i.e., change the serviceability identification to unserviceable, suspended, or serviceable with specific qualifications applied.

c. Logistics Management: NAVSUP P-724 promulgates conventional ordnance stockpile management policies and procedures for worldwide ammunition assets within the Navy.

(1) Stockpile Management Process Requirements. P-724 is the authoritative requirement for ammunition requisitioning, transaction reporting, stockpoint and FOS, load planning, stockpile stratification, demilitarization, disposal, disposition, inventory accounting, transportation planning and control, and inventory data management.

(2) ACCs, D/Cs and Material Condition and Status Identification Requirements. Ammunition serviceability is identified in inventory records and accounts and in transaction reports using CCs and D/Cs. CCs and D/Cs for Navy conventional ammunition are promulgated in Appendix D of the Ammunition Sentencing Publications as directed by NAVSUP P-724. Ammunition is physically identified in terms of its serviceability (CCs and D/Cs) using Material Condition Tags/Labels and bar coded labels (for electronic capture of the data).

12.4.4.7 SMCA Segregation and Reclassification. When CC K ordnance accumulates to an unacceptable level, a request for transfer of Fleet-returned ordnance to inland storage should be addressed to NAVSUP GLS AMMO. NAVSUP GLS AMMO will coordinate the shipment with the SMCA Ammunition Support and Maintenance Division at the Joint Munitions Command for designation of a wholesale stock destination. SMCA quality assurance personnel will check for outstanding restrictions or suspensions and will inspect to verify material conditions. Reclassification actions are accomplished by the preparation of an Ammunition Condition Report (ACR).

12.4.5 Storage.

12.4.5.1 Storage Ashore.

a. Ordnance storage activities are required to provide safe and secure storage for non-nuclear ordnance and inert components in a manner that will permit the most efficient and responsive support to the Fleet. Guidance found in OPNAVINST 5530.13 (series) and 5530.14 (series), Physical Security of Sensitive Conventional Arms, Ammunition, and Explosives (AA&E) shall be followed.

b. Management of available storage on a station-wide basis requires a broad knowledge of:

(1) Types and quantities of magazines, their sizes, and group locations.

(2) NEW limits and physical (volumetric) capacities of magazines in terms of items stored.

(3) Item storage compatibilities, item NEWs, and item sensitivity/security categories.

(4) General Fleet demand rate of items.

c. General Considerations that affect storage management.

(1) The most efficient utilization of a magazine is to fill it to volumetric capacity, while attaining the maximum authorized NEW. Since this is seldom possible, individual magazine utilization can be optimized by judicious selection of low-ratio NEW to total weight items,

consistent with permissible compatibility with high ratio items to maximize magazine storage volumetric and NEW limits.

(2) Magazine selection for high risk (Category 1 or 2) sensitive items should be based on the following parameters.

(a) Denial of accessibility to criminal intrusion by centrally locating at maximum distance from station boundaries.

(b) Consolidate storage areas readily controlled by security personnel for authorized access.

(c) Select magazines or magazine groups that are capable of conversion to hardened storage by perimeter security measures (fencing, Intrusion Detection Systems, protective lighting, and/or nonworking hours patrols).

(3) For medium- and low-risk sensitive items, and for ordnance items not coded as sensitive, magazine selection should be based on consideration of Fleet demand and on storage accessibility to station shipping/out-loading points.

d. The activity weapons/ordnance officer is responsible for the ordnance storage arrangement. Subordinates of this officer are responsible for the location of ordnance by lot number or serial number, and the internal arrangement of the ordnance in each magazine. Individual magazine storage plans should provide ready accessibility for:

(1) Locating specific lots for issue, Ordnance Assessment (OA) sampling, and reclassification action due to NARs.

(2) Conducting physical inventories.

(3) Applying or changing Optical Scanning (OPSCAN) System labels.

(4) Conducting surveillance inspections.

e. Magazine storage layouts are provided in NAVSEAINST 8024.2.

12.4.5.2 Primary Stock points. Primary Stock points, in addition to the considerations identified in Paragraph 12.4.5.1, have additional temporary holding facilities to handle large quantities of throughput ordnance to minimize double handling requirements. Depending on the ship's schedule, temporary storage facilities can also be used to pre-stage ordnance for onload, thus minimizing the ship's time at an explosives pier or anchorage. In all cases, temporary holding areas will be designated in an approved site plan. There are three types of temporary holding facilities:

a. Barricaded rail sidings and barricaded truck areas that have been assigned specific NEW limits.

b. Unbarricaded rail sidings and truck marshalling areas, with or without NEW limits specified.

c. Explosives barges that have been assigned specific NEW limits, for holding and transporting the ordnance and inert cargo from the terminal to the ship at an explosives anchorage.

Appropriate explosives safety and security measures have to be taken at these temporary holding facilities to minimize risk, similar to those for permanent storage facilities.

12.4.5.3 Stowage Afloat. Many of the storage considerations that a facility's ordnance officer must be concerned with have already been determined by the ship designers for the ship's ordnance/weapons officer. The ship magazines' location, size, and design are established to accommodate a specific mixture of ordnance listed in the assigned allowance(s). Any significant change in allowance requiring a change in magazine design requires an Ordnance Alteration. The most significant considerations for the ship's ordnance/weapons officer is ensuring compatibility and proper securing of all ordnance within the magazines to preclude damage due to the ship's movement while at sea, which could lead to a catastrophic event or unserviceable ordnance. For ordnance/weapons officers aboard surface combatants, ordnance magazine design and placement has left very little flexibility for ordnance distribution management. For ordnance/weapons officers aboard surface ships with magazines for cargo or mission allowances, storage plans for each of these magazines should be carefully developed to provide ready accessibility for:

a. Locating specific lots for issue, and reclassification action due to NARs.

b. Conducting physical inventories.

c. Applying or changing OPSCAN labels.

d. Assisting ship's engineering department in ensuring proper weight distribution throughout the ship.

12.4.6 Physical Inventory.

a. Managing a multi-billion dollar worldwide inventory requires effective controls to prevent asset disappearance and ensure asset accountability. To maintain positive control, it is essential that all assets in stowage, storage, and elsewhere (such as in transit or in production) be accounted for, and that stock record balances at all levels be maintained in an up-to-date status. Accurate inventory records not only reflect "good housekeeping," they are essential to Fleet support and to secure supply management practices. Therefore, one of the basic goals of the Navy's physical inventory program has been to improve the accuracy of supply system records. Attainment of this goal improves supply support, ensures accurate and timely budgetary and procurement actions, and results in the cost-effective use of limited manpower and monetary resources. The policies contained in DOD 4140.1-R and in the Navy's supporting directive, NAVSUP P-724, are designed to ensure good supply practices.

b. NAVSUP P-724 provides the Navy policy and responsibilities for achieving and sustaining ammunition inventory accuracy performance objectives and procedures that continuously improve the accountability of ammunition in reporting activity custody.

c. Sampling and Statistical Process Control. The objectives of Sampling and Statistical Process Control (SPC) and its application to ordnance inventory management are to:

(1) Provide a more efficient and revealing depiction of station inventory accuracy.

(2) Provide a diagnostic tool to help managers identify inventory processes that need refinement, and make better decisions regarding the use of limited FOS resources.

(3) Enhance workforce awareness regarding the importance of quality control initiatives and promote participation in sound inventory management practices.

d. Stock point Inventory Accuracy Management Procedures.

(1) All activities reporting Naval ammunition shall designate an Inventory Accuracy Officer (IAO) as required by NAVSUP P-724. Stock points will forward the IAO name, code, Defense Switched Network (DSN) and commercial numbers, and email addresses at the beginning of each FY to NAVSUP GLS AMMO, Code 034.

(2) For scheduled inventories, stock points prepare and maintain a local record of all physical inventories scheduled at the beginning of each fiscal year. The schedule will, at a minimum, designate assets and locations to be inventoried each quarter.

(3) Scheduled Inventories:

(a) Category I (Controlled Inventory Item Codes (CIICs) 1, 5, 6): 100 percent physical inventory conducted semi-annually.

(b) Category II, (CIICs 2, 8, and S): 100 percent physical inventory conducted annually.

(c) All other ammunition/ordnance inventory: Either 100 percent physical inventory conducted annually or an annual statistical estimation sampling process that provides a reasonable assurance that the property accountable records meet applicable inventory accuracy standards with a 95 percent level of confidence (maximum margin of error of 2 percent).

(4) Mandatory Sampling. Naval shore activities identified as Stock Points for Sampling (SPS) by NAVSUP GLS AMMO shall conduct weekly random SPC sampling of the activity's total ordnance inventory for other than CAT I and CAT II (High Risk) material.

(5) Depleted uranium rounds: 100 percent annually. Applicable NALC/NIINs that are reportable to all Ammunition Integrated Management System are: A675/001934227, A675/010876742, A676/011853265, A979/011363623, A979/012512582, and A983/012197970.

(6) Unscheduled inventories are required when any of the following occurs:

(a) Warehouse Denial (Refusal). When material is on record but is not found in the location during material movements (i.e. issuing material).

(b) Bounceback. When a stock-point rejects a requisition referred by NAVSUP GLS AMMO or an NAVSUP GLS AMMO Office, the stock-point must conduct a physical inventory if the transaction history analysis does not resolve the discrepancy.

(c) Anytime a location/magazine is compromised, a 100% inventory for that location must be completed within 24 hours. A location/magazine is considered compromised anytime there is evidence of an unauthorized entry.

e. The Physical Inventory Process (PIP) is described in detail in NAVSUP P-724 and will not be restated here.

12.4.7 NAVSUP GLS AMMO Responsibilities (Per NAVSUP P-724).

a. Develops and issues ordnance accountability and inventory accuracy monitoring policy and procedures for Navy ammunition.

b. Designates a Data Integrity Officer to oversee the Naval Ordnance Inventory Accuracy Program.

c. Conducts periodic Inventory Accuracy Forums (IAFs) for discussion of ordnance accountability and accuracy related issues.

d. Coordinates with the SMCA to ensure Naval ordnance in SMCA activities meet inventory accuracy requirements.

e. Monitors ordnance activity compliance with physical inventory, location audit and location reconciliation scheduling and performance requirements.

f. Provides inventory management inspection personnel in support of the DON Shore Station Explosive Safety Program.

g. On an exception basis, conducts ordnance Ammunition Management and Accountability Review (AMAR) visits to assist ordnance handling and storage activities resolve process deficiencies and improving ammunition inventory accuracy, data quality and accountability.

h. Coordinates with Marine Corps Systems Command (MARCORSYSCOM) to ensure Navy activities holding 0T COG assets meet inventory accuracy requirements.

12.4.7.1 Ammunition Management Accountability Review. The AMAR program succeeded and expanded upon the Non-nuclear Ammunition Inventory Accuracy program. The purpose of the AMAR program is to enhance station magazine to OIS and OIS to OIS-W inventory accuracy. The AMAR program measures inventory accuracy, evaluates procedural compliance fourteen functional areas, and conducts tailored training where required. AMARs are on-site reviews coordinated; scheduled and targeted primarily at activities whose performances trends are suspect. They may be specifically requested by Major Claimants, TYCOMs, Regional Commanders or Commanding Officers or requested and scheduled as a result of an Unsatisfactory Inventory Management grade based on an Explosives Safety Inspection (ESI). NAVSUP GLS AMMO develops, coordinates and conducts AMAR(s).

12.4.7.2 Location Survey Procedures.

a. An annual survey of each location is required. Items within storage areas on which a wall-to-wall physical inventory was performed do not require a separate location survey; the location inventory should identify and resolve material found in unrecorded locations. The CNO goal for location survey accuracy is 98 percent.

b. Retain location survey cards/listings for one year. Retain location survey reports for two years.

12.4.7.3 Inventory Discrepancies. Discrepancies found through inventory processes must be properly reported to ensure the stockpile databases are updated to accurately reflect what is in each magazine. The two reports which cover inventory discrepancies are described in Section 10.3.

12.4.8 Issue. Some of the topics covered must also be considered for receipt and during storage to minimize the effort required during the issue process.

12.4.8.1 Fleet Issue Policies.

a. Service Ordnance. Service ordnance to fill deploying ships and Fleet units' shipfill, interim or tailored allowances must be RFI. This includes CC A, B, and C ordnance items.

b. Training Ordnance. Ordnance for training should be issued from available CC B or C material whenever possible. If appropriate CC B or C items are not available, CC A ordnance of the oldest lots should be issued.

12.4.8.2 Remnant Lots. As a rule, remnant lots should be issued whenever possible for use in training.

12.4.8.3 Quality Assurance on Issue. Ordnance Issue is a general term in ordnance stockpile management that covers transfers from retail or wholesale activity stocks to any activity, regardless of CC. Ordnance issues to Fleet ships and using activities must be made with serviceable RFI ordnance, as certified by the issuing activity. Ordnance issues to retail or wholesale activities ashore to fill Load Plan requirements in support of the Fleet are usually made with serviceable RFI ordnance, as certified by the issuing activity. Each activity Commanding Officer is responsible for ensuring that serviceable ordnance is issued, unless otherwise directed (i.e., issue of assets to a maintenance activity). The Quality Assurance Department, within primary stock points, is assigned Ordnance Assessment (OA) and verification as serviceable for issue responsibilities. At secondary stock points responsibility is assigned to the Weapons/Ordnance Officer and may be delegated to ordnance personnel assigned quality assurance functions.

12.4.8.4 Traceable Seals. A Traceable Seal is a physical device applied to ammunition containers and that must be removed or broken in order to open the container and remove the contents. Ammunition containers require Traceable Seals. Two types (Type 1 and Type 2) of Traceable Seals are used, depending on the type of container. The essential requirements for either Type 1 or Type 2 Traceable Seals are that they not be reusable or removable from a container without destruction of the seal and that they embody an activity symbol or identifier. See NAVSUP P-805.

a. Type 1 Traceable Seals. Type 1 seals are the preferred seals for containers having provisions or means for application of the seals, e.g. metal, plastic, fiberglass or wood containers with lids or hinged covers, latches, brackets or flanges. A Type 1 seal is, typically, a wire length with a metal disk or pellet that is crimped or crushed using a die that imprints the activity symbol or identifier on the disk/pellet.

b. Type 2 Traceable Seals. Type 2 seals are the preferred seals for fiberboard or Styrofoam containers or for metal, plastic, fiberglass or wood containers that will not readily accept Type 1 seals. Type 2 seals are, typically, nonmetallic labels with pressure sensitive backing. They may be pre-printed, stamped or marked with the activity symbol or identifier. Preprinting of individual Inspector indicators is not authorized.

12.4.8.5 Sensitive Item Issues. Issue of sensitive items or non-sensitive classified items, and for items coded 5, 6, or 8, involving transfer via rail or truck is accomplished in accordance with DOD 5100.76-M or DOD 5200.1-R, whichever is most stringent. In conjunction with quality verification for serviceability during issue, a verification of quantity shall be made by inspection, including where practicable, the opening of unsealed containers for code 1 and 2 items. Discrepancies are reconciled and corrected quantities entered on DD Form 1348-1. After verification, containers of code 1 and 2 items shall be sealed with a numbered seal and the

numbers recorded. The use of Signature and Talley, DD Form 1907, should be used as custody passes from magazine warehousing to receiving personnel.

12.4.8.6 Shipment Consolidation. When an Material Release Order (MRO) is received at an SMCA storage site, the quantity to be issued is consolidated with other shipments whenever possible. However, consolidation is waived when it would jeopardize meeting the requiring activity's Required Delivery Date (RDD). MROs are processed by the Single Manager within the Uniform Material Movement and Issue Priority System (UMMIPS) time frames.

12.4.8.7 Issue Replenishment. As a retail activity's stocks become depleted through issues, replenishment is requisitioned in accordance with NAVSUP P-724. Replenishment of stocks is expedited when standard requisitioning procedures are followed, and due care is taken in the assignment of coded data elements. For example, when small multi-packed items are requisitioned for stock replenishment, the quantity requested should equal the quantity of the container contents or the advice code 5H (furnish nearest package quantity to quantity requested) should be specified. Prior to requisitioning ordnance to fill load plan levels, stock points should review available resources, such as on-hand unsegregated ordnance and items in CCs E and F which can be processed and returned to stock as RFI. Item priorities in the listing of readiness deficiencies issued by NAVSUP GLS AMMO, may be modified to replenish stocks from on-hand assets awaiting segregation or maintenance. Immediate Fleet Issue funds are provided for maintenance of rapid turnaround ordnance to replenish station requirements, and for transportation charge avoidance.

CHAPTER 12.5

Requisition and Return Management

Table of Contents

Paragraph	Subject	Page
12.5.1	Inventory Responsibilities	12-5-1
12.5.2	Requisitioning	12-5-3
12.5.3	Interservice Support	12-5-8
12.5.4	Fleet Return, Rollback, and Retrograde	12-5-9

CHAPTER 12.5

Requisition and Return Management

12.5.1 Inventory Responsibilities.

12.5.1.1 Inventory Control Point. NAVSUP GLS AMMO is the ICP to which non-nuclear ordnance items are assigned for inventory management. In 2003, the CNO directed the disestablishment of the NALC, Naval Transportation (NAVTRANS) Center, and Naval Petroleum Office (NAVPETOFF). All three were consolidated into a single command, thus establishing the NAVSUP GLS. NAVSUP GLS AMMO is the ammunition Fleet support agent for CNO, FLTCOMs, CMC, Code ASL and applicable Acquisition/PMs. In the performance of its supply support mission, NAVSUP GLS AMMO refers to Commander, NAVSEA and NAVAIR for technical/program guidance, and to NAVSUP for supply system policy/procedures and program funding.

a. As the IM of non-nuclear ordnance material, NAVSUP GLS AMMO deals directly with the Office of the CNO (OPNAV), CFFC, CNSF TYCOM, Force Commanders, Systems Commands (SYSCOMs), and the SMCA and non-single managed Army. These relationships involve interfaces relating to program direction and funding, reports formulation and exchanges, asset visibility information, and near real-time systems integration with central data repositories.

b. NAVSUP GLS AMMO is charged with broad inventory management responsibilities. This involves receipt, control, and distribution of requisitions for wholesale stocks and the coordination of security assistance and inter-service support requirements. They also perform the following functions.

(1) Maintain world-wide asset status visibility by receiving and recording transaction reports from approximately 1100 reporters of ordnance items.

(2) Receive and process requisitions for wholesale stocks. Distribute ordnance from new production and maintenance activities. Redistribute existing inventories to satisfy changing Fleet requirements.

(3) Perform centralized financial inventory accounting and accomplish billing for stock points in connection with the movement of material.

(4) Stratify ordnance assets to identify long-supply and potential excess items.

(5) Serve as the single commercial transportation management office responsible for the planning, coordinating, and monitoring of overseas shipments of Navy, Coast Guard, Marine Corps (when supplied from Naval activities), and FMS ordnance.

12.5.1.2 NAVSUP GLS AMMO Ammunition Management Offices.

a. NAVSUP GLS AMMOLANT Norfolk, VA and NAVSUP GLS AMMOPAC San Diego, CA provide a single point of contact for their customers, and retail supply points for requisition

management and tracking for non-Disposal, Redistribution, Issue, Procurement and Repair (DRIPR) coded material and all Tomahawk AUR and support equipment. Each is the office responsible for Fleet requisition processing, Fleet interface, and coordination of scheduling ordnance movements in their areas of responsibility. NAVSUP GLS AMMOPAC is additionally responsible for coordinating Opportune Lift (OPLIFT), Vertical Replenishment (VERTREP) and Navy Liaison Office (NLO) actions for the Pacific region.

b. Additionally NAVSUP GLS AMMOLANT Norfolk, VA and NAVSUP GLS AMMOPAC San Diego, CA:

(1) Analyze the potential effectiveness of candidate cross-deck evolutions and coordinate cross-decking.

(2) Publish cross-deck guidance messages to ships that will supply the ammunition and provide specific direction on which assets and asset quantities are to be transferred, when and where the ammunition will be transferred, and what assets are to be retained onboard.

12.5.1.3 Responsibilities of Fleet Units and Shore Activities having custody of Non-Nuclear Ordnance.

a. Custodial accountability for ordnance in their possession.

b. Property management, including responsibility for damage, loss, or destruction of ordnance in their possession.

c. Reporting requirements as specified by the NAVSUP P-724, which includes the status of assets in their possession by quantity, lot number, serial number, and condition.

d. Perform physical inventories of assets in their possession and maintain accurate stock records. The physical inventory program is described in Section 12.4.6.

12.5.1.4 SMCA-Assigned Ammunition. The inventory management responsibilities for SMCA-assigned ammunition are specified beyond that which is listed for all other Navy-assigned ordnance.

a. The IM responsibilities for SMCA-assigned ammunition are contained in DODI 5160.68. The instruction assigns the following IM responsibilities to the SMCA.

(1) Provide the specific inventory management functions defined below for assigned conventional ammunition stored at SMCA facilities. These functions may be provided for Military Service-retained items on a cost reimbursable basis, as allowed by DODI 4000.19.

(a) Responsibility for custodial accountability for assigned conventional ammunition. The SMCA is relieved of custodial accountability on receipt by the Military Service-accountable officer at the first retail point or consumer level.

(b) Report, as required by the Military Services, the status of assigned Military Service-owned assets.

(c) Perform physical inventories per DOD 5100.76-M.

b. DODI 5160.68 assigns the following inventory management responsibilities for SMCA-assigned ammunition to the Military Services.

(1) Provide conventional ammunition receipt, storage, and issue requirements to the SMCA.

(2) Provide contingency requirements to the SMCA.

12.5.2 Requisitioning.

12.5.2.1 General. Basic instructions concerning the policy, scope, and procedures for processing MILSTRIP requisitions are contained in NAVSUP P-485. Specific ordnance requisitioning procedures, ashore and afloat, are contained in NAVSUP P-724, and FCC instructions. Specific procedures governing requisitioning channels and draw down of OT cognizance material by U.S. Marine Corps units are outlined in USMC directives. Material needs are satisfied by the preparation and submission of MILSTRIP requisitions, redistribution orders, and material release orders in accordance with NAVSUP P-485. These represent supply action documents initiated in connection with the following.

a. Ammunition required for annual training exercises, and/or as replacement for ordnance expended during Fleet exercise training within remaining allocations.

b. Ammunition required in support of RDT&E programs within an established allocation, maintenance programs, or OA.

c. Ammunition required to supply ship service allowances for deployment.

d. Ammunition required due to adjustments in mission loads or underway replenishment ship cargo loads.

e. Stockpile manager-directed relocation of ammunition.

f. Initial on-load of ammunition for newly constructed or reactivated ships, and on-load of ammunition for ships leaving overhaul.

g. Segregation of ordnance being transferred to a disposal account and movement to disposal.

h. Ammunition requisitioned for TAE/AOE/AS contingency cargo load.

12.5.2.2 Requisitioning Document. All ammunition requisitions are submitted via NAVSUP GLS AMMO OIS-W or MILSTRIP message. Requisition will then be forwarded for action to NAVSUP GLS AMMOPAC, San Diego, CA, NAVSUP GLS AMMOLANT, Norfolk, VA, Commander, Logistics Forces, Western Pacific (COMLOGWESTPAC), CTF 53 or CTF 63. MILSTRIP messages containing classified information, classified remarks, or classified exception data must only be submitted as an administrative Naval message transmitted to NAVSUP GLS AMMO, NAVSUP GLS AMMOPAC, NAVSUP GLS AMMOLANT, COMLOGWESTPAC, CTF 53 or CTF 63. Requisitions sourced via OIS-W will produce an audit trail for the life cycle of that document. Requisition in English (RIE) format may be used for requisitions with priority codes 01 through 03. The AMMO personnel will transcribe the requisition into MILSTRIP format and refer it to the appropriate stocking point.

12.5.2.3 Method of Transmission.

a. Initial Requisition:

(1) OIS-W

(2) MILSTRIP message via the Defense Messaging System (DMS).

b. Ammunition MILSTRIP Requisition Follow-up.

(1) Initial status on all requisition submitted will be provided via OIS-W. If initial status is not received within seven (7) days, a MILSTRIP follow-up (document identifier AT) is submitted to NAVSUP GLS AMMO using Routing Identifier Code (RIC) NCB.

(2) The status of MILSTRIP requisitions that have been processed through the DAAS from activities can additionally be tracked using a web-based tool developed by the Defense Automated Addressing System Center (DAASC).

c. OIS is the DON automated system for reporting ammunition transactions.

12.5.2.4 UMMIPS. The efficient movement and issue of non-nuclear ordnance items depend on consideration of the relative importance of demands for system resources, such as material assets, transportation, manpower, processing capabilities, etc. Under UMMIPS the relative military importance of an activity or special project is indicated by a Force/Activity Designator (F/AD), assigned by the headquarters organization having command and support responsibility (i.e. NAVSEA, TYCOM, etc). The F/AD is used by the requisitioning activity in conjunction with a variable Urgency of Need Designator (UND) to determine the numeric Issue Priority Designator (IPD) to be indicated on each requisition. The derived IPD expresses its relative military urgency during requisition, issue, and movement transactions. The UMMIPS system is fully described in OPNAVINST 4614.1. UMMIPS procedures apply to organic supply support operations and to stocked items only. In no instance are F/ADs or IPDs assigned for government contractor use. A different system is used for establishing contractor production and delivery priorities. Fleet Commanders, CMC, and Systems Commands are responsible for assigning F/ADs to the activities under their respective commands. To prevent proliferation of high priority requisitions, OPNAVINST 4614.1 requires that F/AD assignments be strictly observed and that the assigned IPDs be consistent with the actual urgency of need. To ensure compliance, the OPNAVINST requires close system monitoring by headquarters activities of assigned F/ADs, and continuing local review of specific higher priority IPDs. Local assignment of UNDs is determined by applying the urgency of need guidelines contained in enclosure (3) of OPNAVINST 4614.1. The following generalization suffices for present purposes.

a. UND A. Used when the requirement is immediate and without the needed material the activity is or will shortly be unable to perform its mission.

b. UND B. Used when the requirement is urgent but not yet critical and could result in impairment of the mission if material is not received in a timely manner.

c. UND C. Used for more or less routine requirements such as stock replenishment, material to meet scheduled deployment, the initial ordering of allowance list material, or when the required delivery date for the material is sufficiently in the future.

The following matrix illustrates how a numeric IPD is derived by combining the activity's (or specific project's) F/AD (I, II, III, IV, or V as appropriate) with one of three alphabetical UNDs.

	UNDs		
	Unable to Perform Mission	Impaired Operational Capability	Routine
F/ADs	A	B	C
I - In Combat	1	4	11
II - Positioned for Combat	2	5	12
IIII - Positioned to Deploy/Combat	3	6	13
IVI - Other Activity and Selected	7	9	14
VI - All Other	8	10	15

A RDD is conditionally indicated on requisitions for use in conjunction with the IPD. The RDD is a Julian date specifying when material is required by the requisitioner at a date different than the standard (published in OPNAVINST 4614.1). When the RDD is other than the assigned standard, its Julian date is indicated in the requisition in accordance with MILSTRIP format. When an RDD earlier than the assigned standard processing time is indicated on the request document, all activities shall exert maximum economic effort (including consideration of high-speed transportation) to deliver the material by the specified RDD. When critically needed items require expeditious handling, the numerical code “999” is entered in the RDD field of the MILSTRIP requisition. Only those requisitions bearing IPDs 01, 02 and 03 for overseas, afloat, and deploying forces are eligible for “999” assignments. Specific UMMIPS priority codes are also used for retrograde. Returned material is moved without regard to F/AD assignment of the activity or units involved, and priorities 03, 06, and 13 are automatically assigned for such use as follows.

d. Priority Designator 03. Return of critical and intensively managed items.

e. Priority Designator 06. Return of material identified by the material manager for automatic return.

f. Priority Designator 13. Routine return of material.

12.5.2.5 Project Codes. Project codes are mandatory entries in CC 57-59 of all Navy requisitions. Project codes most frequently used in ammunition requisitioning are shown in NAVSUP P-724. NAVSUP P-485 provides a complete list and additional information on project codes. Special Project Codes are assigned to Joint Chiefs of Staff directed operations. Project Codes are perpetuated on all related documentation, and as part of the shipping container markings. They are used to identify requisitions and related documents to enable managers to monitor shipments and accumulate costs and performance data pertaining to:

a. Special projects.

b. Operations.

c. Exercises and maneuvers.

Such codes do not provide or imply priority for requisition processing or supply decisions. To do so requires that the assigned project code be used in conjunction with an appropriate IPD. NAVSEA has stipulated that project codes in the 800 series will be reserved for requisitioning and turn-in of Navy and Marine Corps non-nuclear ordnance. Requests for the assignment of new project codes for recurring use in requisitioning and turn-in of non-nuclear ordnance are coordinated with NAVSUP GLS AMMO by NAVSEA. Requisitions with Office of the Secretary of Defense (OSD) or Joint Chiefs of Staff (JCS) project codes are ranked above all other requisitions with the same priority designators. When system-wide inventory levels do not permit positive designator, supply procedures will provide for a release of requisitions containing OSD and JCS project codes. Such codes do not provide or imply priority for requisition processing or supply decisions. To do so requires that the assigned project code be used in conjunction with an appropriate IPD. Commander, Naval Sea Systems Command (COMNAVSEASYSCOM) has stipulated that project codes in the 800 series will be reserved for requisitioning and turn-in of Navy and Marine Corps non-nuclear ordnance. Requests for the assignment of new project codes for recurring use in requisitioning and turn-in of non-nuclear ordnance are coordinated with NAVSUP GLS AMMO by COMNAVSEASYSCOM. Requisitions with OSD or JCS project codes are ranked above all other requisitions with the same priority designators. When system-wide inventory levels do not permit positive supply action on all requisitions with a given priority designator, supply procedures will provide for a release of requisitions containing OSD and JCS project codes. A listing of non-nuclear ordnance project codes is found in NAVSUP P-724.

12.5.2.6 Requisition Processing.

a. OIS-W validates the entries in any requisition, whether directly input to OIS-W or entered via DAAS. Fleet requisitions with errors are routed by OIS-W to the appropriate Inventory manager or requisition processor. The NAVSUP GLS AMMO Office will liaison with the requisitioner and try to correct the error(s), or explain why the requisition is invalid.

b. Valid requisitions go through a sourcing process. If the ordnance ordered is available at load sites, the requisition is referred to the load site to fill. The following considerations apply:

(1) Requisitions with one of the following conditions will be routed to the appropriate NAVSUP GLS AMMOPAC, NAVSUP GLS AMMOLANT, or NAVSUP GLS AMMO IM.

(a) Issue Priority Group I, Priority 1, 2, or 3.

(b) Remarks.

(c) Errors, or the quantity exceeds allowance.

(2) Requisitions for the following ordnance material will be routed to the appropriate IM.

(a) Aircrew Escape Propulsion System (AEPS)/Cartridge Actuated Devices (CADs) will be submitted in accordance with NAVSUP P-724.

(b) Ordnance material who's NSN is coded with an Issue Restriction Code (IRC) or DRIPR.

c. When the ordnance material requisitioned is not available at the load site, the requisition will be directed to the appropriate AMMO Office. The AMMO Office personnel will look for

the most cost effective source of the ordnance. Ordnance may be sent from another stocking point, or cross decked from another unit.

d. If the ordnance is not available in the NAVSUP GLS AMMOPAC, NAVSUP GLS AMMOLANT or theater logistic agent area of responsibility, the requisition is forwarded to the appropriate IM at NAVSUP GLS AMMO for action.

e. NAVSUP GLS AMMO Office and theater logistics agents will coordinate shipfill/cargo load cross deck opportunities whenever the chance arises, in accordance with Fleet load plans, to meet requisitioner's needs. This includes having needed top off ordnance aboard duty TAE/AOE ships during major Fleet exercises. Keeping serviceable ordnance at sea is cost effective and efficient.

f. NAVSUP GLS AMMO Office personnel, NAVSUP GLS AMMO IMs, or stock point personnel will adjust requested quantities to unit pack quantities whenever possible to save time and money. The requisitioner will be notified of any changes in quantity.

12.5.2.7 Requisition Validation and Monitoring. The MILSTRIP requisitioning system, described in NAVSUP P-485, prescribes procedures, forms, formats, and documents which are mandatory for requisitioners, and supply support activities. Its uniform codes, forms, formats, and procedures for transmitting requisitioning data apply in the Navy supply system to all centrally managed items. The detailed procedures for processing requisitions are predicated on the need for accurate inventory system record keeping and accountability, and for effective material support of the Fleet. Violations of the standard MILSTRIP format and communication/delivery media tend to impair the integrity of the MILSTRIP structure and minimize its effectiveness. For such reasons, the validation and monitoring of material requests (manually and by automated means) are features of the MILSTRIP requisition process. The range of data that requires validation by the supply source during processing is extensive and therefore beyond the scope of this manual. Validation procedures are documented comprehensively in the NAVSUP P-485 and NAVSUP P-724, FCC instructions, and in the field activity internal procedures manuals. Part E: Material Obligation Validation (MOV) of NAVSUP P-485 discusses in detail the elements of data on a MILSTRIP document requiring validation and the processing action to be taken in each case. At stock points where stock records are computerized, it is essential to maintain stringent quality control to ensure machine acceptance of requisition data. Screening of requisitions against authorized allowances and station Load Plans is performed by NAVSUP GLS AMMO personnel. This screening is primarily to resolve conflicting demands concerning the distribution of material among several claimants, or between Fleet combat and Training, Testing and Current Operational Requirements (TTCOR), when material is in a low stock position. In such cases, resolution of allowance conflicts is coordinated by the item manager based on his knowledge of the exceptional nature and priority of activity requirements.

12.5.2.8 Requisitioning Ordnance from the SMCA.

a. SMCA-Assigned Items. Requisitions to SMCA for ammunition items to be filled from wholesale stock are forwarded to the JMC by NAVSUP GLS AMMO. This is accomplished by using a MRO indicating a document identifier in the A4-series. The JMC selects the supply source and directs shipment by issuing a MRO to the SMCA storage site. Shipment status is provided when a valid distribution code is indicated in the referral order. JMC does not accept

requisitions submitted directly by Navy retail customers; such requisitions received by the JMC are passed to NAVSUP GLS AMMO.

b. Non-SMCA-Assigned Items. MROs for non-SMCA-assigned ordnance items stored at Army storage sites are submitted directly to the storage site by NAVSUP GLS AMMO. Copies or facsimiles of such release orders are provided to the JMC. In turn, the storage site will forward a Material Release Confirmation to NAVSUP GLS AMMO.

c. Material Release Denial (MRD). An MRD is prepared in MILSTRIP format by the storage activity for that portion of the total quantity specified in the requisition/MRO which cannot be shipped.

12.5.2.9 Follow-Up, Modifications, or Cancellations. The Navy or Marine Corps unit initiating a requisition, regardless of where it has been referred to shall submit follow-up modification or cancellation requests in MILSTRIP format to OIS-W/NAVSUP GLS AMMO (NCB). An information copy will be submitted to the loadout point. When units are deployed or home-ported overseas, theater guidance for addressees applies.

12.5.3 Interservice Support.

12.5.3.1 Coast Guard.

a. The policy of exchanging personnel, vessels, facilities, equipment, supplies, and services between the Navy and the U.S. Coast Guard is based on statutory authority (Title 10, USC and Title 14, USC). The logistics support policy existing between the Navy and the Coast Guard is promulgated by OPNAVINST 4000.79.

12.5.3.2 Standing Approval List (SAL).

a. Interservice Transfer Conditions.

(1) Items must be common usage items (not Service unique), authorized by the Services for listing on the latest update of the SAL (pyrotechnics FSC 1370 are excluded).

(2) Transfers of items are made only if simultaneous replacement by record repayment at another SMCA activity can be made.

(3) The payback item must be the same NSN and in the same quantity as the transferred item.

(4) The condition of the payback item must be the same or better than the condition of the transferred item.

(5) Interservice transfers are followed by issue and receipt transactions, and depot lot records are changed to reflect new Service ownership within five days.

b. Navy Criteria for Items to be designated as SAL Items.

(1) Be SMCA managed.

(2) Be used by one or more of the other Military Services, as evidenced by the existence of the item by NSN in their stock catalogs.

(3) Not be in Navy short supply.

(4) Not be positioned for a special purpose, such as maintenance.

(5) Not be reserved for a Navy mobilization requirement.

(6) Not be palletized in accordance with MILSTD-1323 for transfer-at-sea.

c. Service and SMCA Responsibilities.

(1) The SMCA must obtain prior approval in each instance for interservice transfers of SMCA items not on the SAL.

(2) All Services will annually review and update the SAL for additions and deletions depending on factors 12.5.3.2b (3) thru (6).

12.5.4 Fleet Return, Rollback, and Retrograde.

12.5.4.1 General. U.S. Navy ships are deployed with their full wartime allowances (service, interim, or tailored) of service ordnance designed to fill ships magazines to capacity. Service ordnance certified as serviceable by qualified ordnance personnel ashore, is issued and if not expended is retained until all ordnance is off-loaded (e.g., at the time of "ship's availability"). Expenditures are replenished, but the basic service load may be kept aboard for up to five years, and only subjected to Operational Level Maintenance (OLM). Eventually, the remaining ordnance is returned to an ordnance activity ashore where it is inspected, run through a segregation or maintenance line as required, and recertified as serviceable.

12.5.4.2 Fleet Return Policy. The following ordnance and ordnance details are required to be returned to CONUS from Fleet units and overseas bases (includes rollback and retrograde).

a. Serviceable ordnance in excess of local requirements for return to stock.

b. Unserviceable - repairable ordnance in excess or beyond local maintenance capabilities, returned for maintenance.

c. Unserviceable - non-repairable ordnance returned for demilitarization and recovery of components or parts as required.

d. Serviceable ordnance details - for reuse in the manufacture, or Load, Assemble, and Pack (LAP) of new ordnance.

e. Fired cartridge cases larger than 20mm and all fired brass cases. These shall be classified serviceable/repairable/unserviceable in accordance with NAVSUP P-724, and returned for appropriate processing.

f. All 5" propelling charge tanks, 76mm ammunition tanks, 57mm two round ammunition tanks, and 57mm two round clips following the expenditure of the contained assets.

12.5.4.3 Procedures and Responsibilities.

a. Proper Preparation. Packing, accurate marking/labeling, and complete shipping documentation are essential for the economical and safe return and subsequent processing of Fleet returned ordnance.

b. Ships and Outside Continental United States (OCONUS) activities expending ordnance and ships with cargo or mission allowances (service, interim, or tailored) are responsible for ordnance return procedures as contained in Fleet/Logistic/TYCOM directives/instructions. These are enumerated as follows.

(1) Excess serviceable ordnance or unserviceable ordnance items are to be turned in to the nearest ordnance activity ashore.

(2) During expenditure, ships and Fleet activities shall retain all reusable details, as listed in NAVSUP P-724 for return to the nearest ordnance activity ashore or to UNREP ships (TAEs/AOEs) if practicable. This includes fired cartridge cases larger than 20mm and all fired brass cases. These shall be classified serviceable/repairable/unserviceable in accordance with NAVSUP P-724 and returned for appropriate processing.

(3) Ordnance off-load of the entire allowance, for emergency repair work or yard availability, should be scheduled at a CONUS primary stock point.

(4) All ordnance turned-in ashore shall be documented on DD Form 1348-1.

(5) In certain circumstances, such as short-term emergency ship repair, ordnance may be off-loaded for temporary storage ashore. These storage arrangements require TYCOM certification of operational necessity and the Fleet Commander's authorization. In this case the following steps will be taken.

(a) The offloaded ordnance will be carried on the ship's stock records.

(b) The shore activity will store the ordnance load separately.

(c) The shore activity will return the identical ordnance that was turned in without reporting receipt or issue transactions, or inspection or sentencing.

(6) Ordnance details such as containers, cartridge/propelling charge tanks, and ordnance boxes, retained for reuse shall be 100 percent inspected and certified empty to ensure that no explosive loaded items are present. All markings describing the former contents shall be obliterated, and the container stenciled or tagged "EMPTY" or, if used for inert ordnance details it shall be stenciled or tagged "INERT."

c. Ordnance Activities Ashore. A basic logistics function of retail stock points is the acceptance of excess or unserviceable ordnance items and accumulated ordnance details turned in.

(1) OCONUS Ordnance Activities. Unserviceable Fleet-returned ordnance, which cannot be made serviceable with local capabilities or by means of periodic Mobile Ammunition Evaluation and Reconditioning Unit (MAERU) assistance, and excess serviceable ordnance items, are offered for redistribution to the IM via the FLTCOM or his logistic representative. Accumulated ordnance details with a total weight of less than one ton may be shipped by earliest available surface transportation to the appropriate consignee listed in NAVSUP P-724. For accumulations over one ton, activities must contact NAVSUP GLS AMMO.

(2) Minor, Secondary CONUS Stock points. The procedures for receipt by CONUS minor and secondary retail stock points of reusable ordnance details turned-in by tenant, neighboring expending activities, or ships, are the same as for OCONUS shore activities. Shipment to the

ultimate consignee is identified in NAVSUP P-724. Ordnance which may be occasionally turned-in to minor and secondary retail stock points is to be taken up in stock.

(3) Primary CONUS Stock points. CONUS Fleet commands on each coast are the primary points for Fleet-returned ordnance receipt. Procedures for receiving Fleet returns at primary stock points are as follows:

(a) Shipfill Allowance Off-Loads. Ship's (own) ordnance is usually not palletized. Waterfront personnel check the items for quantity as listed on the ship's DD Form 1348-1, and forward this document to Ammunition Distribution and Control (AD&C) via Production Planning and Control for segregation scheduling.

(b) Cargo and Mission Allowance Off-Loads. This ordnance is usually palletized. The waterfront check is performed as described in NAVSUP P-805. If the material is palletized in a MIL-STD-1323 configuration and tagged in accordance with MIL-STD-129 indicating "Serviceable" (CCs A, B, or C), it is taken up in stock as serviceable. A check of lots for Notice of Ammunition Reclassification (NAR) and a visual inspection of the pallet load for damage or deterioration are performed and appropriate tags attached for unserviceable or suspended ordnance. Waterfront personnel will attach a MIL-STD-129 tag "Suspended - CC K" to each pallet where condition is not readily determinable. Each CC K pallet is sent to segregation.

(c) Rollback Returns. Palletized and loose ordnance returned as part of a rollback will be processed in the same manner as for ship allowance and cargo mission allowance off-loads. Receipt at the stock point may be from commercial or organic shippings. In either case, ordnance items will be documented on DD Form 1348-1 or on a ship's manifest.

(d) Retrograde Materials. This material consists of ordnance details and inert components. Retrograde material may be included in rollback shipments, off-loaded with ordnance, or received as separate shipments of retrograde. Unpalletized ordnance details and inert components received with ship off-loads of ordnance or included in rollback shipments, should be subjected to the segregation process contained in NAVSUP P-805.

CHAPTER 12.6

Transaction Reporting

Table of Contents

Paragraph	Subject	Page
12.6.1	General	12-6-1
12.6.2	Transaction Item Reporting	12-6-2
12.6.3	Ammunition Transaction Reporting	12-6-4

List of Illustrations

Figure	Title	Page
12-6-1	TIR Document Identifier Codes	12-6-3

CHAPTER 12.6

Transaction Reporting

12.6.1 General.

12.6.1.1 Asset Reporting. High material costs and limited assets necessitate accurate up-to-date reporting of world-wide Naval ordnance inventories. Asset visibility is achieved when stock status of material inventories, including receipts and expenditures, is systematically reported to NAVSUP GLS AMMO for updating central files, and current summary information is published (or made available on the telecommunications network) for use by planners and IMs. In this process, the reporting field activities share responsibility for the accuracy of the information reported into the NAVSUP GLS AMMO OIS-W records. In the final analysis, the reliability of the non-nuclear ordnance asset information system depends on the exercise of good quality control at each step of the reporting process, and on the prompt identification and correction of errors and inconsistencies.

12.6.1.2 Stock Status Reporting. Data compiled from stock status reporting constitute the basis for the all-important function of stratifying, determining requirements, and formulating the annual budget. If these data are inaccurate or inadequate, calculations for new ordnance procurements and production requirements are likewise inaccurate. The issue and redistribution of assets, maintenance planning, disposal, and numerous other supply actions all depend on reliable data. To ensure the accuracy of reported information, central and local file data are continuously and systematically reconciled by the IM. Navy-owned assets stored at non-Navy activities are also reported daily into OIS-W and differences, if any, are reconciled with the SMCA/Reporting activity.

12.6.1.3 Asset Visibility. Ordnance reporting under OIS-W applies to principal end items and major subassemblies which are reported down to, and including, user level. End-item management policies dictate worldwide and in-depth visibility of items in transit. Accordingly, the OIS-W reporting network is more extensive than that of Uniform Automated Data Processing System (UADPS) where items are generally considered to be expended from the supply system when issued from the supply officer's accountable records. Under UADPS, items issued to suboutlets (such as shop, or retail issue store) are subject to financial accounting but do not retain visibility in a stock status transaction reporting system, nor are they considered assets in budgetary and procurement calculations. Non-nuclear ordnance end items are positioned to meet the CNO prescribed distribution objectives and require continual in-depth visibility and central management up to and including expenditure.

12.6.1.4 Governing Instructions. NAVSUP P-724 contains the detailed policies, procedures, and responsibilities governing the reporting of non-nuclear ordnance. Those instructions are supplemented by the Commander Naval Surface Forces and CFFC direction.

12.6.1.5 Reporting Network. Terms used in connection with the reporting of non-nuclear ordnance are "TIR" and "ATR".

a. TIR. The method of reporting stock status information to NAVSUP GLS AMMO on a daily basis is via OIS-R, CCSS (Satellite Motor Surveillance System (SMSS) assets), Standard Depot

System (SDS) (non-SMSS assets), Logistics Management Program (LMP), UADPS. Reports are submitted by the primary and major secondary ordnance stock points to advise of changes to any of the elements of stock status data. In addition to reporting individual item transactions, an asset status card accompanies the daily report which summarizes all reported transactions under a specific NSN, purpose code, and CC. Negative reports are required for those activities for which no transactions are recorded.

b. ATR. ATRs are submitted by Naval message, email and direct file transfer on an "as-occurring" basis within 24 hours of a reportable transaction by activities afloat and ashore (and commercial contractors when required), that are not on the TIR system. Under ATR reporting, the day's transactions and the opening and closing balances are reported by DODIC/NALC for each active item. ATR reports are designed to categorize, among other things, end-use expenditures and allow for explanatory remarks.

12.6.2 Transaction Item Reporting.

12.6.2.1 Reportable Actions. TIR through the DOD and Navy communication system enables near real-time reporting TIR by shore activities, which is essential to provide a reliable database of ordnance inventory information. Therefore, continuous, intensive, and careful management and reporting of ammunition is essential. Transaction reports automatically update the OIS-W database for all Navy ammunition. TIRs are the standard MILSTRAP format. OIS-R level 3, CCSS, SDS, LMP, and UADPS generate TIRs for electronic transmission to OIS-W.

a. Activities reporting ammunition designated as serial or lot number controlled, are required to submit the specific lot/serial data simultaneously with the reportable transaction. A lot or serial record will also be maintained for those items that have lot or serial numbers assigned but are not designated as a lot/serial reportable item.

b. TIRs will be submitted within 24 hours (one working day) after completion of the event (receipt issue, expenditure, assembly, disassemble, test, inspection, inventory, reclassification, re-identification, etc.). Transactions for Categories I and II items (Security Risk Codes 1, 2, 5, 6, 8 and S) will always be reported within 24 hours after completion of the event, with exception to major off-loads at Weapon Stations or NMC Detachments which may be extended to 72 hours. The specific document identifier series used for reporting ordnance transactions are listed in Figure 12-6-1 for information.

c. A separate record must be maintained by NIIN, Ownership Code/Purpose Code/ACC, CC, and physical location of the item.

d. All transactions required as a result of receipt, issue, expenditure, assembly, disassemble, renovation, test, inspection, production, disposal, and inventory functions will be posted to the local record.

12.6.2.2 Financial Inventory Reports (FIR). All Navy TIR reporters are required to perform financial reporting. TIR activities shall submit reports using FIR and Fund Codes associated with applicable DICs. Applicable FIR and Fund Codes are found in NAVSUP P-724. NAVSUP GLS AMMO prepares and submits the monthly FIR report to Commander Naval Supply Systems Command (COMNAVSUPSYSCOM) in accordance with NAVCOMPT Manual. NAVSUP GLS AMMO prepares the FMS billing data set and forwards to NAVSUP WSS Mechanicsburg PA.

Transaction	Document Identifier (Series)
Dual Adjustment (increase or decrease) resulting from purpose transfer.	DAD
Dual Adjustment (increase or decrease) resulting from condition transfer.	DAC
Receipt transactions based on procurement instrument source (e.g., commercial procurement, MIPR, receipt of material assembled based on a project order).	D4 series
Receipt of transaction from other than procurement (e.g., return of material to inventory, receipts from other locations, receipts from non-Navy sources.	D6 series
Issue transactions (e.g., to Navy, DOD, non-DOD activities, to foreign countries, to test and evaluation, to activities as government furnished material for production or Loading, Assembling and Packing (LAP), to others as defined in appendix 4 of NAVSUP P-437).	D7 series
Single adjustment transaction (e.g., changes or transfer of condition code or purpose code).	D8/D9 series
Reidentification of stock (e.g., used for previously misidentified items or for changes as a result of renovation).	D8/D9 series and D6/D7 (renovation)
Adjustments (Inventory Gains/Loses and Adjustments).	D8/D9 series
For Further Transfer (FFT) (for material passing through NAVSEA ordnance stock points.	BGC
Items determined to be beyond economical repair and transferred to the property disposal officer.	D7J
Negative transaction report.	BZA
End of Day Balance report.	DZA
Reconciliation Report.	DZH
Serial Number/Serial-Lot Number Report.	BG1
Lot Number Report	BG2

Figure 12-6-1. TIR Document Identifier Codes

12.6.3 Ammunition Transaction Reporting.

12.6.3.1 Reportable Actions. ATRs are used to report ammunition supply transactions by Naval activities and commercial ordnance and handling activities that do not have a TIR capability. ATR is a method of reporting transactions involving Naval conventional ordnance. ATRs are transmitted via formatted message for all transaction types, using variable length transaction lines.

a. All Navy-owned ammunition material assigned a DODIC/NALC is reported by the ATR activities. An initial report is compiled to establish balances. Subsequent reports are compiled to submit receipts, issues, expenditures, inventory adjustments and maintenance transactions.

12.6.3.2 ATR Numbering. The initial ATR report is assigned "serial number 001." Individual transactions are numbered sequentially from the initial report (e.g., serial 001, serial 002, ... serial 039... etc.). The serial numbers are used by NAVSUP GLS AMMO to compare and adjust the OIS-W inventory balances recorded for the activity and to detect missing reports. ATRs are submitted by message.

12.6.3.3 Report Contents.

a. Line 1 of the transaction message contains the service designator code, UIC, report serial number, ACC, transaction date and the allocation UIC with service designator code, UIC. ACC codes are listed in NAVSUP P-724. Allocation UIC is command registered with NCEA. Exception: For specified financial reporters, listed in NAVSUP P-724, one slash (/) will follow the Allocation UIC and an "F" (for financial) followed by three slashes (///) which ends the Header line. The Allocation UIC may be the same as the Reporting UIC. A separate ATR is required for each different Allocation UIC.

b. Transaction Lines. The transaction line is used to describe the actual transaction. A transaction line refines the NALC and NIIN, CC, beginning balance, transaction code (type of transaction), the transaction quantity, Serial/Lot Item Tracking (SLIT) data when required, the Consignor UIC (UIC From) for receipts or Cosignee UIC (UIC To) for issues, the document number and ending balance. Exception: For specified financial reports, listed in NAVSUP P-724, one slash (/) will follow the Allocation UIC and an "F" (for financial) followed by three slashes (///) which ends the Header Line. The allocation UIC may be the same as the Reporting UIC. A separate ATR is required for each different Allocation UIC.

c. Remarks. The REMARKS sections will not be used for reporting transactions. Remarks section is used for amplification of transactions and to list a Point of Contact.

d. Offload and Annual Reconciliation ATR Reports. A Reconciliation Transaction (B and T Transaction) will be forwarded to OIS-W for each NALC/NIIN, ACC and CC on an annual basis. All ships will complete a record-to-record reconciliation within two weeks after a complete offload. Any discrepancies between activities on-hand balance and OIS-W computed on-hand balance must be reconciled.

CHAPTER 12.7

Stratification Process

Table of Contents

Paragraph	Subject	Page
12.7.1	General	12-7-1
12.7.2	Stockpile Stratification Initialization	12-7-1
12.7.3	Total Munitions Requirements Baseline Development	12-7-2
12.7.4	Annual Preliminary Stratification Review Procedures	12-7-3
12.7.5	End of Year Stratification Review Procedures	12-7-3
12.7.6	Final Stratification Procedures	12-7-3
12.7.7	Cross Leveling	12-7-4

CHAPTER 12.7

Stratification Process

12.7.1 General. Per NAVSUP P-724 this section provides policy and procedures for executing the annual ammunition stratification review, identification of essential Acquisition/Program Manager participation in support of the NAVSUP GLS AMMO and procedures for generating required reports to COMNAVSUPSYSCOM. NAVSUP GLS AMMO conducts the annual on-site (Mechanicsburg, PA) stratification review of the ordnance inventory. This review includes identifying requirements, identifying and documenting end of FY inventory, comparing requirements to inventory, reviewing and determining retention levels and potential excesses. During stratification, the ordnance inventory is broken down into four categories, Total Munitions Requirement (TMR), Economic Retention Munitions Stock (ERMS), Contingency Retention Munitions Stock (CRMS) and Potential Reutilization/Disposal Stock (PR/DS). The procedures cited do not apply to locally managed and stocked RDT&E and 0T COG items.

a. The definitions of the four categories are as follows:

(1) Total Munitions Requirement. The TMR provides the baseline for comparison with on-hand/inventories and the determination of long/supply/excess. TMR calculations include requirement levels in the NNOR, asset quantities necessary to satisfy the approved NCEA and sufficient assets to sustain projected combat expenditures.

(2) Economic Retention Munitions Stock. Assets greater than the TMR for which it is determined to be more economical to retain for future peacetime issue than to dispose and re-procure and/or repair in the out years. To warrant economic retention, items must have a reasonable predictable requirement.

(3) Contingency Retention Munitions Stock. Assets greater than the TMR for which there is no predictable or quantifiable requirement, but which are retained for specific national defense contingencies. CRMS can be retained to support RDT&E programs, projected modification programs, FMS Sales-from-Stock with planned Replacement-in-Kind, potential redeployment of deactivated ships/weapon systems, and treaty requirements.

(4) Potential Reutilization/Disposal Stock. All assets greater than the TMR that are not retained as ERMS or CRMS. Material that has the potential for being sent to the Defense Reutilization and Marketing Service for possible reutilization by another DOD Component or by a Federal, State, or local government agency; or for disposal through sale to the public.

12.7.2 Stockpile Stratification Initialization.

a. The stratification process is initiated by NAVSUP GLS AMMO. Annual identification of obsolete items and migration into Ammo Class “X” category occurs during May and June.

b. NAVSUP GLS AMMO reviews and validates stratification NALC strings and configurations for possible changes. New stratification numbers are assigned to new items as they enter

service. Validation of stratification control number strings in NAVSUP GLS AMMO OIS-W is accomplished annually during July through September time frame.

(1) Stratification level. Stratification will be accomplished at the DODIC/NALC level with substitute DODICs grouped with the prime. Items not assigned a DODIC/NALC will be reported by NSN.

c. Calculate baseline TMR (see Paragraph 12.7.3).

d. NAVSUP GLS AMMO receives from the CNO (N702) the constrained NNOR and NCEA data.

e. NAVSUP GLS AMMO issues letter to Acquisition/Program Managers requesting:

(1) Requirements data for newly cataloged items that do not have established requirements.

(2) Requirements data for Non-NNOR tactical items and components, containers and miscellaneous parts use factors that relate their requirement to NNOR end-item quantities.

12.7.3 Total Munitions Requirements Baseline Development.

a. Total Munitions Requirements. The sum of WRMR and TTCOR. The total munitions requirements is equivalent to the Approved Acquisition Objective (AAO).

(1) War Reserve Munitions Requirements. The sum of Combat Requirements, Residual Readiness Requirements, and Strategic Readiness Requirements.

(a) Combat Requirements (CR). The quantity of munitions required to equip a specified force structure to its designed military capability and to meet Combatant Commander requirements for decisive defeat of the enemy. That includes munitions needed for operational flexibility during conflict.

(b) Residual Readiness Requirement (RRR). Munitions necessary to provide a post-Major Theater War (MTW) combat capability for forces committed to the Defense Planning Guidance (DPG) specified scenarios. Combat requirements include munitions needed for operational flexibility and some of those munitions may remain at the conclusion of the scenarios, then the RRR should be decreased by the amount remaining. Otherwise the RRR is additional.

(c) Strategic Readiness Requirement (SRR). The quantity of munitions needed to arm forces not committed to support combat operations in the assigned MTW. It also includes any additional munitions requirements to meet treaty or statutory obligations to allies.

(2) Training, Test, and Current Operational Requirement. Munitions requirements to train the forces and to support Service programs ensuring that weapons and platforms deliver the intended effectiveness. OA testing of munitions items is accounted for in that block. Current operational requirement encompasses peacetime operational requirements (i.e. natural disasters, riot control, saluting rounds, and explosive ordnance disposal operations and operations other than war) and deployed force requirements in excess of the assigned conflict's requirements. A seven year supply of TTCOR (current year requirement plus budget and Program Objectives Memorandum (POM) years) is the normal stockage level of stockpile objective.

(3) Approved Acquisition Objective. The quantity of an item authorized for peacetime and wartime requirements to equip and sustain U.S. and Allied Forces in accordance with current DOD policies and plans. This quantity shall be sufficient to support other U.S. Government agencies, as appropriate. This is considered equivalent to the TMR.

(4) The following computation criteria is used in the development of the TMR:

(a) For NNOR items: The highest WRMR from the POM/PR cycle is added to the sum of the 1st and 2nd fiscal years of NCEA and the sum of the 3rd through 7th year of the TTR and projected combat expenditures.

(b) For Non-NNOR tactical items: The Acquisition/PMs POM/PR WRMR (2E, 2T, 6T) added to the sum of the 1st and 2nd fiscal years of NCEA five times the greater of the 1st or 2nd year of NCEA.

(c) For Training Only Items: The sum of the 1st and 2nd fiscal years of NCEA five times the greater of the 1st or 2nd year of NCEA.

12.7.4 Annual Preliminary Stratification Review Procedures.

a. NAVSUP GLS AMMO executes a preliminary run of the stratification model annually in July to validate input data and again at the beginning of October to capture end of FY asset posture in OIS-W.

b. NAVSUP GLS AMMO reviews and forwards end of FY report to Acquisition/PMs in early October.

c. Acquisition/PMs review for potential excess and provide written justification to NAVSUP GLS AMMO for all ordnance economic and contingency retention munitions stock decisions.

12.7.5 End of Year Stratification Review Procedures.

a. NAVSUP GLS AMMO Stockpile Managers and the Acquisition/PMs or designated representatives, review stratification requirements by line item.

b. Retention justifications are documented on a master form along with signatures of respective Acquisition/PMs and NAVSUP GLS AMMO representatives.

c. NAVSUP GLS AMMO enters updated requirements data and remarks for retention decision into OIS-W prior to final stratification run in early December.

12.7.6 Final Stratification Procedures.

a. When the final stratification model run is complete, results are compiled and long supply items are identified.

b. NAVSUP GLS AMMO develops input to the Navy Supply System Inventory Report (SSIR) no later than 15 December annually.

(1) Data provided in support of the Navy SSIR is extracted from final stratification results. Wholesale Dollar Values are tabulated by COG as follows:

(a) Total Munitions Requirement.

(b) In-Transit Stock.

(c) Economic Retention Stock.

(d) Contingency Retention Stock.

(e) Potential Re-Utilization/Disposal Stock.

(f) Total assets.

12.7.7 Cross Leveling.

12.7.7.1 The annual stratification provides the basis for cross leveling. Upon completion of the final stratification run, a PR/DS excess list will be generated by NAVSUP GLS AMMO in mid December and forwarded to the IMs. Concurrent with the development of the PR/DS excess list, the stratification coordinator will also generate two listings based on final stratification results.

a. The first list will contain all items of long supply in the ERMS, CRMS and PR/DS categories. This list is forwarded to all Acquisition/PMs, In-Service Engineering Agents (ISEAs), Special Operating Forces, Marine Corps, Army, Air Force, Coast Guard and the Office of the Executive Director for Conventional Ammunition (EDCA) no later than the end of December.

b. The second list will contain only items with assets in the serviceable PR/DS category. This list is forwarded to the Navy International Program Office (NIPO) no later than the end of February. These items are offered for potential sale to FMS customer countries.

12.7.7.2 These recipients review and identify cross leveling or sales-from-stock candidates. MILSTRIP Project Code "3AH" is used for all services to identify cross leveling actions. The order of precedence for potential cross leveling of Navy assets is Navy Special Operations Forces (SOF), Coast Guard, U.S. Marine Corps, Army, Air Force, and/or Coast Guard.

a. The O/EDCA will compare other service out year requirements against the services items of long supply to identify Quad Service Review (QSR) candidates. The QSR is held in mid March.

b. NAVSUP GLS AMMO will represent the Navy at the annual cross leveling review (aka QSR) hosted by the EDCA. Potential Navy interest in the transfer of assets from other Services is coordinated by NAVSUP GLS AMMO in coordination with the appropriate Acquisition/PM.

c. The gaining claimant is responsible for any packaging and transportation costs. The losing claimant issues the movement requisition for material transfer.

d. NAVSUP GLS AMMO implementation of cross leveling actions is reported to the EDCA and applicable Acquisition/PMs on a quarterly basis.

SECTION 13

Logistics Management Support

Table of Contents

Chapter	Subject	Page
13.1	Explosives Safety Management	13-1-1
13.2	Physical Security Management	13-2-1
13.3	Transportation Management	13-3-1
13.4	Environmental Management	13-4-1

CHAPTER 13.1

Explosives Safety Management

Table of Contents

Paragraph	Subject	Page
13.1.1	General	13-1-1
13.1.2	Joint Hazard Classification System	13-1-3
13.1.3	United Nations Organization Hazard Classification System	13-1-4
13.1.4	Acquisition Explosives Safety	13-1-5
13.1.5	Maintenance Explosives Safety	13-1-5
13.1.6	Explosives Safety Ashore	13-1-5
13.1.7	Explosives Safety Afloat	13-1-6
13.1.8	Explosives Safety Ashore, Advanced Bases	13-1-6
13.1.9	Transportation Explosives Safety	13-1-6

CHAPTER 13.1

Explosives Safety Management

13.1.1 General.

13.1.1.1 Perspective. The primary focus of explosives safety management is to minimize risk to personnel, facilities, and equipment throughout the life of the ordnance. Even though there are personnel specifically assigned to explosives safety management positions at all echelon levels, everyone working with or around ordnance should consider themselves responsible for explosives safety management, and for identifying and minimizing risk. The purpose of the Explosives Safety Management Program is to specify standardized safety regulations for the research, development, production, maintenance, care, handling, storage, preparation for shipment, use, and disposal of conventional ordnance. The safety regulations are intended to control the hazards associated with these operations including, but not limited to, blast, fire, lightning, Hazards of Electromagnetic Radiation to Ordnance (HERO), and propagation.

13.1.1.2 Policy. The following is Navy policy, which is consistent with operational requirements.

a. Provide the maximum possible protection to personnel and property, both inside and outside an installation or unit, from the damaging effects of accidents involving conventional ordnance and explosives.

b. Limit the exposure of a minimum number of persons, for a minimum time, to the minimum amount of ordnance and explosives consistent with safe and efficient operations.

c. Comply with ordnance and explosives safety standards established by the Department of Defense Explosive Safety Board (DDESB) and as published by Naval Sea (NAVSEA) Systems Command and Chief of Naval Operations (CNO).

13.1.1.3 Scope. The Naval explosives safety program applies to all personnel, civilian and military, assigned to any part of Department of the Navy (DON) where non-nuclear ordnance and explosives are present.

13.1.1.4 Responsibilities.

a. CNO exercises general supervision and command authority for the application of technical guidance prepared by Commanding Officer, Naval Ordnance Safety and Security Activity (NOSSA). Public website: http://www.nossa.navsea.navy.mil/ or military users website: https://nossa.nmci.navy.mil/nrws2/. Within the Office of the CNO (OPNAV), the Deputy CNO for Fleet Readiness and Logistics (N4) is responsible for supervising Navy explosives safety matters. N4 coordinates explosives safety policy, programs and guidance which affect Navy and Marine Corps forces mutually, with the Commandant of the Marine Corps (CMC).

b. NOSSA is assigned the responsibilities for the Navy's explosives safety program to include the following.

(1) Interpret Department of Defense (DOD) explosives safety policy contained in Department of Defense Directive (DODD) 6055.9.

(2) Establish Navy explosives safety ashore policy and procedures through NAVSEA OP 5.

(3) Establish Navy explosives safety afloat policy and procedures through NAVSEA OP 4.

(4) Establish Navy explosives safety ashore for Advanced Bases policy and procedures through NAVSEA OP 5.

(5) Establish additional explosives safety policies and procedures through additional instructions and publications as required.

(6) Provide technical review for the CNO for all Navy facility site plans (world-wide) at or adjacent to activities where explosives are stored, handled, or maintained, prior to forwarding of such site plans to DOD Explosives Safety Board for approval.

(7) Provide the Chair and a technical representative for the CNO-mandated Ammunition and Hazardous Materials (AMHAZ) Review Board.

(8) Review all requests originating within DON for exemptions and waivers from established explosives safety criteria and advises CNO as to the technical validity of such requests.

(9) Control the Approval for Navy Use process of all new or modified ordnance items through the Weapon System Explosives Safety Review Board (WSESRB).

(10) Through its Explosives Safety Support Offices (ESSOs), conduct Explosives Safety inspections of all shore activities, and conventional ordnance readiness reviews of all ships, where ammunition and explosives are handled or stored to ensure compliance with appropriate criteria.

(11) Assign hazard classifications to ammunition and explosives.

(12) Evaluate and certify electrical safety in the areas of HERO, Electrostatic Discharge (ESD), and Lithium Batteries.

c. Packaging, Handling, Storage, and Transportation (PHS&T) Center, Naval Surface Warfare Center, Picatinny Arsenal, NJ. The PHS&T center is responsible for identification of life cycle requirements, conception, design, development, prototype fabrication, test and evaluation, production acquisition and documentation of ordnance containers and handling equipment for the U.S. Navy. PHS&T also provides explosives safety technical publication support to NOSSA.

d. Ordnance Item Program Executive Officers (PEOs)/PMs. The PEO/PM is responsible for obtaining the appropriate data for the determination of the Hazard Class/Division (HC/D) of the item along with the other explosive characteristics as part of the cataloging procedure described in Chapter 12.3 of this manual.

e. Field Activities and Contractor Facilities. Each ordnance activity and facility shall have an Explosives Safety Officer, designated in writing, reporting directly to the Commanding Officer/Director. Ordnance activities and facilities are directly responsible for the safe management of all ordnance in their custody and for the safety of all personnel, equipment, and facilities inside and outside the gate during the presence of ordnance at their activity or facility.

13.1.2 Joint Hazard Classification System.

13.1.2.1 General. NAVSEAINST 8020.8 is the Joint-Service instruction for the Navy Explosives Hazard Classification Program, outlining program responsibilities and the interim and final hazard classification processes. Since 1992 the Joint Hazard Classification System (JHCS) has been the authoritative source, within DOD, for hazard classification of non-nuclear ordnance. The publication of the JHCS provides a single-source authoritative document for hazard classification data which takes precedence over conflicting information found elsewhere.

13.1.2.2 Description. The JHCS provides a means for ensuring the proper assignment of a HC/D code, a storage compatibility group, and accurate explosive weights for calculating appropriate separation distances. The assignment of these codes and explosive weights occurs before or as part of the cataloging process for new ordnance items. The data necessary for hazard classification is specified in the PMs checklist. The assignment of these codes and explosive weights can be based on either test results on the specific item being introduced, or on test results of other like items which already are or have been in the active inventory. Any changes to the item or packaging configuration require that these codes and explosive weights be reviewed for required changes.

13.1.2.3 Responsibilities.

a. The U.S. Army's Defense Ammunition Center (DAC), located at McAlester, OK, is responsible for maintaining the database which contains the DOD JHCS data. Their website is: https://www3.dac.army.mil.

b. Each Military Department has a Hazard Classifier. The Hazard Classifier for DON (Navy and Marine Corps ordnance) is located within NOSSA.

13.1.2.4 Hazard Classification Process.

a. NAVSEAINST 8020.8 provides the tests and tri-Service coordination process for hazard classification within DOD. The objective is to be in compliance with Federal Regulations for the safe transport of hazardous materials as published in Title 49, Code of Federal Regulations and SW020-AC-SAF-010; and to be in compliance with Navy requirements for the safe storage of ordnance as published in NAVSEA OP 5. Both Title 49, Code of Federal Regulations and SW020-AC-SAF-010 make provisions for interim hazard classification during item development and for final hazard classification once the item configuration and packaging is finalized.

b. Interim Hazard Classification. An interim hazard classification is normally used during the development cycle of an ordnance item to permit shipment; however, it can be used in other situations. It is assigned by the appropriate Hazard Classifier, and must be requested in writing and supported by test data. A copy of the interim hazard classification must accompany any shipments of the item over public roadways.

c. Final Hazard Classification. Once the PEO/PM submits the cataloging request form to Naval Supply Systems Command Global Logistics Support (NAVSUP GLS AMMO) and the hazard classification data to the Hazard Classifier, the process to obtain a final hazard classification begins. The Hazard Classifier will review the data and assign a hazard classification, United Nations (UN) number, proper shipping name, and storage Net Explosive Weight (NEW). This information will be forwarded to DAC (Army Hazard Classifier), the Air Force Safety Center

(Air Force Hazard Classifier), and DDESB for approval. When approved, the information is forwarded to the Department of Transportation (DOT), via the Military Surface Deployment and Distribution Command (SDDC) http://www.sddc.army.mil (formerly Military Traffic Management Command (MTMC)) for assignment of an EX registration number. DOT forwards a copy of the letter assigning the Explosive Registry (EX) number to DAC who enters the item into the JHCS database. The JHCS database only contains ordnance items which have received final hazard classification. DAC forwards the EX numbers to the other Service Hazard Classifiers. The Navy Hazard Classifier enters the data into NAVSUP GLS AMMO Ordnance Information System-Wholesale (OIS-W).

d. All validated hazard classification data is then available in the JHCS for other service users, in the OIS-W catalog database for access by OIS-W users, and in the SW020-AC-SAF-010 publications for all Fleet unit, field activity, and contractor facility users.

13.1.2.5 JHCS Database. The JHCS database is designed to allow field activities to easily retrieve the latest explosive hazard classification data. The system is managed on behalf of the DDESB by the DACs U.S. Army Technical Center for Explosives Safety (USATCES). To access this system, the user will need to be authorized and have a computer with connectivity to the World Wide Web (www) and Netscape 4.0+ or Internet Explorer 4.0+ or higher. To initiate the procedure for becoming an authorized user and obtaining a password, contact USATCES at DSN 956-8771, or by logging on to https://www3.dac.army.mil/esidb/login/ request/and filling out the request for login and authentication form. The query capabilities of the system allow you to request information in any of the following formats:

a. List JHCS data by National Stock Number (NSN).

b. List JHCS data by Department of Defense Identification Code (DODIC).

c. List JHCS data by Part/Drawing Number.

d. List JHCS data by Nomenclature.

e. Perform Query Form.

13.1.3 United Nations Organization Hazard Classification System. DOD uses the UNO classification system to identify the hazard characteristics of non-nuclear ordnance and explosives. These hazard characteristics are the focal point around which the safety standards have been established.

13.1.3.1 UNO Classes. Nine hazard classes, plus a not-regulated category, for hazardous materials have been established by the United Nations Committee of Experts on the Transport of Dangerous Goods. Ordnance possessing more than one hazardous material or hazard are assigned to the class that represents the item's predominant hazard characteristic.

13.1.3.2 Class/Divisions. Some hazard classes are further divided into divisions that indicate the primary characteristics and associated hazards. Hazard class and divisions are referred to using the decimal notation. The Class/Divisions are identified and defined in depth in NAVSEA OP 5.

13.1.3.3 Compatibility Groups (CGs). Not all non-nuclear ordnance may be stored or transported together. Only those assessed to be compatible. This assessment evaluates whether the

combination would significantly increase either the probability of an accident or, for a given quantity, the magnitude of the effects of such an accident. This assessment results in the assignment of a CG. Thirteen CGs are available for assignment (A, B, C, D, E, F, G, H, J, K, L, N, and S). The CGs are identified and defined in depth in NAVSEA SW020-AC-SAF-010.

13.1.4 Acquisition Explosives Safety.

13.1.4.1 Research. Explosives safety begins in the research environment during item development. NAVSEA OP 5 covers the explosives safety regulations as they pertain to Research, Development, Test and Evaluation (RDT&E) activities.

13.1.4.2 Weapon System Explosives Safety Review Board. The WSESRB is designated by the CNO to review safety aspects of non-nuclear ordnance and to make recommendations to the responsible Naval Command or PEO/PM. All newly introduced Navy ordnance items will be reviewed by the WSESRB to assure that safety and weapons related environmental requirements are met. No ordnance acquisition program, will proceed to Approval for Full Production (AFP) without WSESRB safety approval or certification as stated in NAVSEAINST 8020.6.

13.1.4.3 Production. Production explosives safety issues are specifically addressed in NAVSEA OP 5. This includes SOPs used in production operations which are regulated by NOSSAINST 8023.11. The NOSSA instruction defines the processes requiring an SOP and the general contents and outline of an acceptable SOP.

13.1.4.4 Electrical Safety. All ordnance items must be tested and certified for HERO and ESD prior to cataloging or fielding as specified in NAVSEAINST 8020.7 series and NAVSEAINST 8020.19.

13.1.5 Maintenance Explosives Safety. Maintenance explosives safety issues are the same as for production. The regulations identified in Paragraph 13.1.4.3 also apply specifically to maintenance processes.

13.1.6 Explosives Safety Ashore.

13.1.6.1 Regulation. Regulations for production, maintenance, care, handling, storage, use, disposal, and clean up of conventional ordnance items at Navy and Marine Corps shore activities, regardless of ordnance and explosives ownership, is under the cognizance of NOSSA as delegated by NAVSEASYSCOM. Ordnance processes shall conform to the regulations stated in NAVSEA OP 5, as well as the safety standards promulgated by the DON and applicable federal, state, and local regulations that are not in conflict with those of NAVSEASYSCOM.

13.1.6.2 Storage Compatibility. Different types of ordnance stored in magazines ashore can only be stored in the same magazine if authorized by the storage compatibility chart contained in SW020-AC-SAF-010.

13.1.6.3 Shore facilities that store, transport, or handle ordnance must meet requirements for HERO surveys as specified in NAVSEAINST 8020.7 series.

13.1.7 Explosives Safety Afloat.

13.1.7.1 Regulation. The detailed specifications and blueprints for construction of Navy ships designate the only authorized ordnance and explosives spaces or magazines for each ship type and class. The explosives safety requirements for non-nuclear ordnance aboard all Navy ships is found in NAVSEA OP 4. The commanding officer of a commissioned Navy ship or other craft that is at a pier or wharf that forms part of a Naval shore activity or is in waters adjacent to a Naval shore activity as defined by local regulations has direct responsibility for compliance with all ship and station safety regulations that concern ordnance and explosives within the ship in conformance with orders of the commanding officer of the Naval shore activity concerned. The Quantity-Distance standards contained in NAVSEA OP 5 for piers, wharfs, and anchorage facilities apply to ships with cargo ordnance stowed aboard, and to all ships during loading, off-loading, stowage, or shifting of ordnance. Navy combatant ships and tenders must comply with the standards set forth in OPNAVINST 8020.14 while berthed at U.S. Naval Stations and similar support activities.

13.1.7.2 Stowage Compatibility. Ordnance can only be stowed together in the same magazine aboard Naval vessels if authorized by the appropriate stowage compatibility chart contained in NAVSEA OP 4. Stowage compatibility of military ordnance aboard commercial vessels shall be as described in 49 CFR 176.83(c) and (f).

13.1.7.3 Ships that store, transport, or handle ordnance must meet requirements for HERO surveys as specified in NAVSEAINST 8020.7 series.

13.1.8 Explosives Safety Ashore, Advanced Bases.

13.1.8.1 Regulation. The explosives safety requirements for designated overseas ordnance activities is found in NAVSEA OP 5. In addition to these requirements, overseas activities must also comply with all host country regulations which are more restrictive than the requirements in NAVSEA OP 5.

13.1.8.2 Storage Compatibility. Ordnance stored in magazines ashore overseas at advanced bases can only be stored together in the same magazine if authorized by the appropriate storage compatibility chart contained in NAVSEA OP 5.

13.1.9 Transportation Explosives Safety.

13.1.9.1 Regulations. Safety regulations and requirements for shore station operations involving inspection, loading, unloading, and on station transportation of non-nuclear ordnance and explosives are found in NAVSEA OP 5. Requirements for in-transit shipments of ordnance and explosives are found in Public Law, DOT regulations, NAVSEA SW020-AC-SAF-010, and Military Sealift Command (MSC) regulations.

13.1.9.2 Transportation Compatibility. Ordnance can only be stored together in the same transport vehicle if authorized by the appropriate storage compatibility chart contained in SW020-AC-SAF-010.

CHAPTER 13.2

Physical Security Management

Table of Contents

Paragraph	Subject	Page
13.2.1	General	13-2-1
13.2.2	Defense Transportation Tracking System	13-2-3

List of Illustrations

Figure	Title	Page
13-2-1	Physical Security Management Organizational Relationships	13-2-2
13-2-2	Controlled Inventory Item Codes	13-2-4

CHAPTER 13.2

Physical Security Management

13.2.1 General.

13.2.1.1 Standards. Standards and criteria have been established for the physical security of DOD sensitive conventional Arms Ammunition and Explosives (AA&E). These standards and criteria are intended to protect against loss or theft of AA&E at DOD activities and DOD contractor facilities. They apply to non-nuclear ordnance items during production, maintenance, storage, and transportation. DOD AA&E physical security guidance is found in DOD 5100.76-M. Navy specific guidance for physical security of AA&E is found in OPNAVINST 5530.13.

13.2.1.2 Perspective. The primary focus of physical security management is to minimize the risk of ordnance technology compromise, intentional damage, and theft. Even though there are personnel specifically assigned to physical security management positions at all echelon levels, everyone working with or around ordnance should consider themselves responsible for physical security, and identifying and minimizing risk.

13.2.1.3 Organizational Relationships. The organizational relationships of the commands whose major function is physical security management are depicted in Figure 13-2-1.

13.2.1.4 Responsibilities.

a. The CNO exercises general supervision and command authority for the AA&E physical security program in the Navy. Within the Office of the CNO (OPNAV), N46 is responsible for supervising Navy physical security matters, and coordinates physical security policy, programs, and guidance which effect Navy forces.

b. The NOSSA is the principal authority for the Navy's AA&E physical security and ordnance transportation security programs and is tasked by the CNO to perform the following:

(1) Evaluate the Navy AA&E physical security posture and develop cost effective upgrades.

(2) Centrally manage, analyze, and maintain Navy statistical data on AA&E physical security matters and monitor AA&E physical security program objectives to ensure compliance with policies and standards.

(3) Manage the Navy AA&E security waivers and exceptions process.

(4) Implement Navy policy and guidance for the Ordnance Inventory Accuracy Management Program.

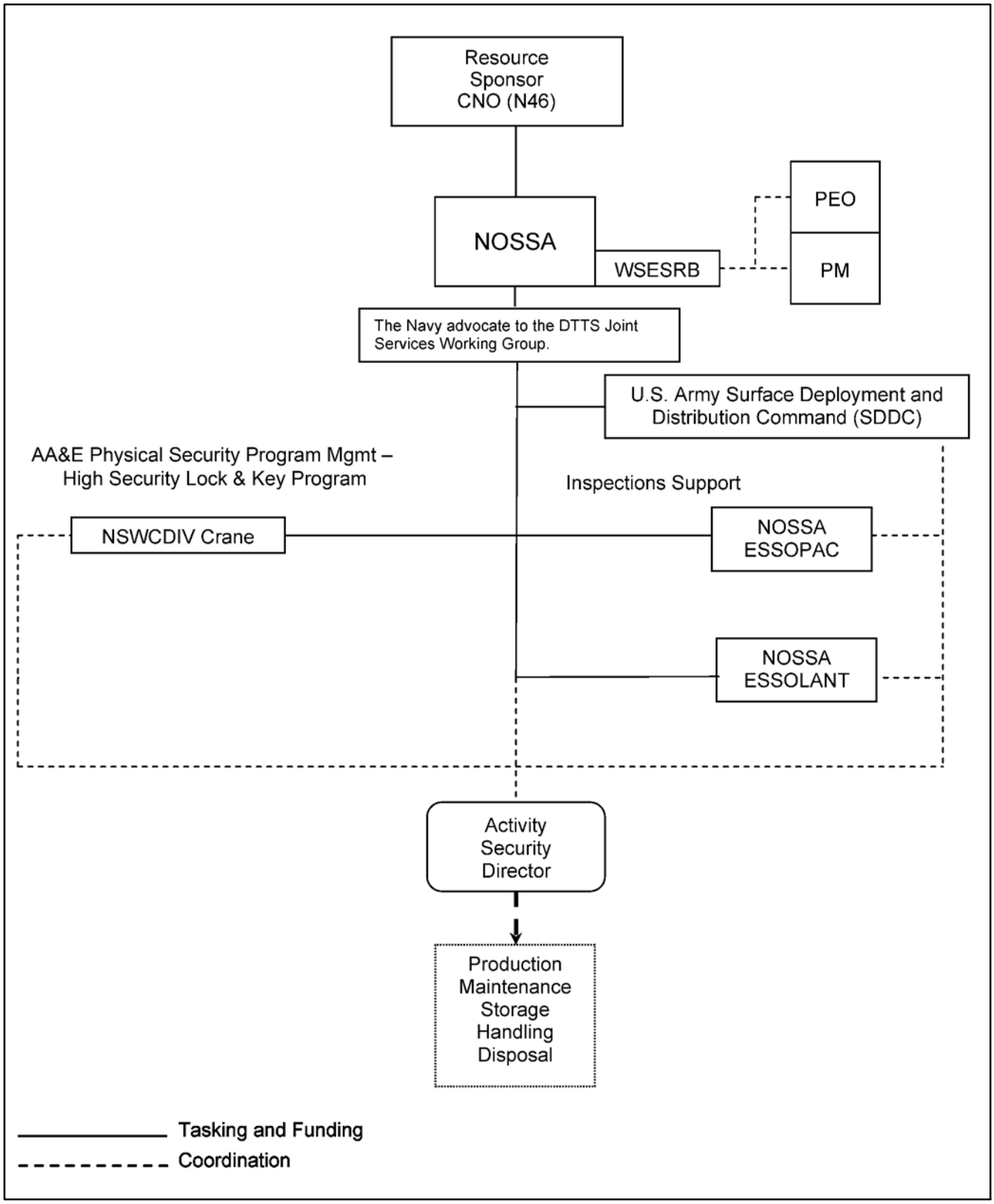

Figure 13-2-1. Physical Security Management Organizational Relationships

c. Naval Surface Warfare Center Division (NSWCDIV) Crane, the Navy's AA&E physical security PM provides program support including the following:

(1) Issue, repair, and replace cylinders, locks, and keys for high security locks.

(2) On behalf of NOSSA, reviews all AA&E physical security waivers and exceptions.

(3) Fleet technical and policy support for AA&E Physical Security issues.

d. Naval Facilities Engineering Services Center (NFESC), is the DOD Technical Manager for lock, safe, vault, seal, and container programs, and provides DOD program support in these areas.

e. ESSOs. The NOSSA ESSOs include AA&E physical security issues in their explosives safety program inspections of shore activities and afloat units.

f. The ordnance item PEO/PM is responsible for determining the security risk category of the specific item as part of the item cataloging procedure described in Section 12-3. The security risk category is assigned in accordance with procedures found in DOD 5100.76-M and OPNAVINST 5530.13. This is accomplished by using a Decision Logic Table that results in a given item amassing a numerical value which relates to a risk category code (see Figure 13-2-2).

g. Field Activities and Contractor Facilities:

(1) Assign an AA&E Security Officer/Accountability Officer in writing, reporting directly to the Commanding Officer/Director.

(2) Responsible for the security of all ammunition and explosives in their custody.

(3) Appoint in writing a key and lock custodian, whose duties include assuring proper security, custody, handling and inventory of AA&E keys and locks.

(4) Ensure an AA&E security survey is conducted at least every 12 months, and maintain records of the three most recent surveys for external review.

(5) Ensure submission of an special incident report in accordance with Naval Supply Systems Command (NAVSUP) P-724 Chapter 6, Section 2 and OPNAVINST 5530.13 Chapter 7 for reportable AA&E stolen, lost, unaccounted for, or recovered; this includes gains or losses due to inventory adjustments.

(6) Ensure compliance to the AA&E physical security policies of OPNAVINST 5530.13.

13.2.2 Defense Transportation Tracking System.

13.2.2.1 United States Transportation Command (USTRANSCOM) http://www.transcom.mil/ and its subordinate command, Military SDDC http://www.sddc.army.mil are responsible for DTTS management and maintenance.

13.2.2.2 Purpose. The primary mission of Defense Transportation Tracking System (DTTS) is intransit ordnance safety and security. The secondary mission is supporting the DOD In-Transit Visibility (ITV) initiative by forwarding its complete ordnance movement and positioning database to USTRANSCOM Global Transportation Network (GTN) on an hourly basis.

CIIC	DEFINITION
1	HIGHEST SENSITIVITY (SECURITY RISK CATEGORY I). Non-nuclear missiles and rockets in a ready-to-fire configuration (e.g., HAMLET, REDEYE, STINGER, DRAGON, LAW, VIPER) and explosive rounds for non-nuclear missile and rockets. This Security Risk Category also applies in situations where the launcher (tube) and the explosive rounds, though not in a ready-to-fire configuration, are jointly stored or transported.
2	HIGH SENSITIVITY (SECURITY RISK CATEGORY II). Arms, Ammunition, and Explosives.
3	MODERATE SENSITIVITY (SECURITY RISK CATEGORY III). Arms, Ammunition, and Explosives.
4	LOW SENSITIVITY (SECURITY RISK CATEGORY IV). Arms, Ammunition, and Explosives.
5	HIGHEST SENSITIVITY (SECURITY RISK CATEGORY I). Arms, Ammunition, and Explosives with a physical security classification of SECRET (see Note 1).
6	HIGHEST SENSITIVITY (SECURITY RISK CATEGORY I). Arms, Ammunition, and Explosives with a physical security classification of CONFIDENTIAL (see Note 1).
7	UNCONTROLLED/UNCLASSIFIED. Items coded ”7”, UNCONTROLLED/UNCLASSIFIED, require normal storage accountability, physical inventory controls as is appropriate for any Department of the Navy property and demilitarization prior to disposal.
8	HIGH SENSITIVITY (CATEGORY II). Arms, Ammunition, and Explosives with a physical security classification of CONFIDENTIAL (see Note 1).
S	SECRET. Items coded ”S”, SECRET, will be shipped as required by DOD Directive 5200.1R which is incorporated in OPNAVINST 5510.1. All other security protection during the life cycle shall be in accordance with the standards specified for Category II items.
C	CONFIDENTIAL. Items coded ”C”, CONFIDENTIAL, will be shipped and protected during the life cycle with at least the equivalent security measures that are provided for security risk Category III items. An exception is the REDEYE man portable missile system which shall be shipped and protected as a Category I item.
U	UNCONTROLLED/UNCLASSIFIED. Items coded ”U”, Uncontrolled/Unclassified, require normal storage accountability and physical inventory controls as is appropriate for any Department of the Navy property.
P	PILFERABLE. Items coded ”P”, Pilferable, include ammunition and explosives that are easily concealed, especially subject to theft, and desirable for personal use or sale for profit.

Notes: 1. Items coded 5, 6, or 8 will be stored and transported in accordance with the provisions of DOD 5100.76M, DOD 5200.1R, or OPNAVINST 5530.13, whichever is more stringent.

Figure 13-2-2. Controlled Inventory Item Codes

13.2.2.3 System Description. DTTS uses satellite positioning and communication technology, digitalized mapping and 24-hour oversight to micro-manage all DOD movements of sensitive conventional AA&E transported within the Continental United States (CONUS) by specially approved commercial motor carriers.

a. Method of Access to DTTS. There are two methods for accessing DTTS data: Common Access Card (CAC) protected, USTRANSCOM GTN and Satellite Motor Surveillance (SNS) system and SDDCs Intelligent Road & Rail Information Server (IRRIS). IRRIS is available at https://www.irris.tea.army.mil; a CAC is required for access.

b. DTTS System Customers and Users. DTTS services a wide variety of customers, including DOD ordnance shipping activities, many commercial AA&E manufacturing/maintenance contractors, Fleet Commanders (FLTCOMs), Type Commanders (TYCOMs) and various ordnance logistics and transportation command elements.

13.2.2.4 Capabilities. DTTS offers a variety of ordnance movement information on two different levels of access, ordnance shipping/receiving activities, and DOD management elements. Movement information includes such level of detail as Security Risk Category, HC/D and NEW. Ordnance shipping and receiving activities can obtain details on ordnance shipments or receipts. Management activities such as NAVSUP GLS AMMO, USTRANSCOM, the U.S. Army's Joint Munitions Center (JMC), and Headquarters U.S. Air Force and authorized users can obtain broad reports involving total movements.

CHAPTER 13.3

Transportation Management

Table of Contents

Paragraph	Subject	Page
13.3.1	General	13-3-1
13.3.2	Requirements	13-3-3

List of Illustrations

Figure	Title	Page
13-3-1	Transportation Management Organizational Relationships	13-3-4

CHAPTER 13.3

Transportation Management

13.3.1 General.

13.3.1.1 Background. The transportation of AA&E and other non-nuclear ordnance is a complex function. The NOSSA in conjunction with the NAVSUP GLS AMMO develop and implements policy and procedures for the shipment of ammunition. Challenges are provided by the wide array of commodities involved and the cross-service organizational relationships that require internal and external coordination of the transportation logistics process.

13.3.1.2 Policy.

a. NAVSUP P-724 prescribes the general policies, procedures, and responsibilities for performance of traffic management functions at DOD activities worldwide.

b. In accordance with specific direction provided by NAVSUP GLS AMMO, Norfolk, VA, all non-nuclear ordnance is shipped by surface lift (regardless of the Required Delivery Date (RDD) or priority) unless the Fleet Commander approves airlift or unless premium service results in lower overall cost.

c. Navy Munitions Rule Implementation Policy (MRIP) CNO Memo Ser N457F/452 of 27 July 1998 provides guidance for the safe storage and transportation of military munitions once they become hazardous waste.

d. All ammunition requisitions, including related Military Standard Requisition and Issue Procedures (MILSTRIP) documents such as modifications, cancellations, rejections, etc. will be entered into the NAVSUP GLS AMMO OIS-W.

13.3.1.3 Responsibilities.

a. The CNO exercises general supervision and command authority for the application of technical guidance prepared by the Commander, NAVSUP, the Commander, NAVSUP GLS AMMO, and the Commanding Officer NOSSA. Within the Office of the CNO (OPNAV) the Deputy CNO for Logistics (N4) is responsible for supervising Navy ordnance transportation matters, and coordinates ordnance transportation policy, programs and guidance which effects Navy and Marine Corps forces mutually with the CMC.

b. NOSSA.

(1) Serves as the Naval ordnance transportation authority for policy, internal and external interfaces and macro transportation issues. Interprets broad transportation management and safety security laws, rules and regulations of the DOD, Secretary of Navy (SECNAV), DOT and other Federal regulatory agencies.

(2) Develops Naval non-nuclear ordnance transportation policies and procedures that provides for the safe handling and transport of ammunition, explosives and related hazardous materials.

(3) Develops ordnance transportation emergency response planning and participates in joint planning coordination.

c. NAVSUP GLS AMMO:

(1) Serves as the Department of Navy single point of contact for coordination with the Joint Munitions Transportation Coordinating Agency (JMTCA) for the Single Manager for Conventional Ammunition (SMCA) and non-SMCA common user ammunition movement requirements, other than Class V(W) 0T COG Marine Corps ground ammunition.

(2) Serves as the Navy logistics office responsible for coordinating, controlling and monitoring the movement of all overseas shipments of non-nuclear ordnance under the cognizance of the NAVSUP GLS AMMO and the SMCA. The same responsibility also pertains to the coordination of 2D COG material within the CONUS.

d. USTRANSCOM: As the DOD single manager for sea, land and air transportation, controls all DOD transportation assets except those that are service unique or theater assigned.

e. Military SDDC: Is the second echelon component of USTRANSCOM designated as the DOD single manager for military traffic, land transportation, inter-modal containers and common user ocean terminals, is responsible for the performance of traffic management function within CONUS. It functions as the joint service liaison between the DOT, commercial industry and other joint service organizations. Its mission is to provide responsive, flexible support in peace and war to operating forces of the U.S. Army, Navy, Air Force, Coast Guard and Marine Corps.

f. SDDC Operations Center: Serves as the single USTRANSCOM focal point for the execution of surface inter-modal movements within the Defense Transportation System (DTS). Their responsibilities include procuring and booking surface inter-modal movement requirements, maintaining inter-modal shipping schedules and the Integrated Booking System (IBS), negotiating ocean and inter-modal rates and related services to meet transportation requirements and manage the Defense Freight Railway Interchange Fleet (DFRIF) which supplements the capability of commercial transportation carriers.

g. MSC: Is a second echelon command and component of USTRANSCOM with primary responsibility for providing sea lift service worldwide. MSC coordinates closely with the shipping services (Army, Navy, Air Force and Marine Corps) and with the other single-manager transportation components, SDDC and the Air Mobility Command (AMC).

h. Fleet Commands, NAVSUP GLS AMMOLANT/AMMOPAC, CMC, U.S. Coast Guard (USCG), Overseas Stations and Fleet Units:

(1) Review requirements and submit requisitions in a timely manner, taking into consideration shortfall of funds available to move material as well as the reduced means to move material. Revalidates current material requisitioning procedures against Uniform Material Movement and Issue Priority System (UMMIPS) standards to ensure proper use of RDD. Cites Transportation Account Code (TAC) with requisition submission if special funds are allocated for movement.

(2) In accordance with specific direction provided by NAVSUP GLS AMMO Norfolk, VA all non-nuclear ordnance is to be shipped by surface lift regardless of RDD or priority unless premium service results in a lower cost. If airlift is required, provide justification at the time of MILSTRIP submission.

(3) NAVSUP GLS AMMOLANT/AMMOPAC assists Fleet activities in the coordination of retrograde.

13.3.1.4 Organizational Relationships. The relationships of the commands/offices whose major function is ordnance transportation management are identified in Figure 13-3-1.

13.3.2 Requirements.

13.3.2.1 Explosives Safety. Requirements for explosives safety during transportation are found in Section 13-1 and NAVSEA SWO20-AG-SAF-010.

13.3.2.2 Physical Security. Transportation security standards and procedures used in safeguarding categorized ordnance and explosives are found in OPNAVINSTs 5530.13 and 5530.14, and NAVSEA SWO20-AG-SAF-010. There are standards established for the transportation of ordnance as well as specific considerations for small quantity shipments, movement by commercial carriers, and Foreign Military Sales (FMS) shipments.

13.3.2.3 Transportation Mode Requirements.

a. Motor Vehicles. All ordnance and explosives shipments, foreign and domestic, will comply with the UN recommendation. Additional safety requirements governing shipments within states may be imposed by the individual states and by municipalities through which shipments will move. Navy vehicles transporting ordnance and explosives are subject to all safety regulations applicable to common carriers, as well as to DON regulations while transporting off-station. Navy owned on-station transportation must meet the requirements of NAVSEA SW023-AG-WHM-010. Specific procedures concerning vehicle types, fuel, cargo space, inspections, operating requirements, drivers' qualifications, explosives compatibility, parking, etc. are found in NAVSEA OP 5 and NAVSEA SWO20-AG-SAF-010.

b. Railroad. DOT and Association of American Railroads Safety Regulations, pertaining to safety devices, safety guards, design of equipment, and the like, are mandatory for carrier owned railway equipment used to transport ordnance and explosives on and off Navy and Marine Corps shore activities. Navy owned on-station railcars not used in interchange or off-station service must meet the requirements of NAVSEA SW023-AK-SAF-010. Specific requirements regarding locomotives, signs and signals, railcar marking inspections, railroad operations, and operations at Naval facilities are found in NAVSEA OP 5.

c. Air Shipments. Regulations and requirements described in CFR Title 14 and Title 49, published in Bureau of Explosives Tariff No. BOE-6000, apply to air shipment by commercial aircraft. Regulations and requirements for packaging and handling dangerous materials for transportation by military aircraft are found in NAVSUP P-505. Requirements for cargo and aircraft pre-loading inspection, aircraft loading, marking, electrical grounding, and other matters relating to air shipment of ordnance and explosives are found in NAVSEA SWO20-AG-SAF-010.

d. Water Transportation. The transshipment of ordnance and explosives by water in vessels engaged in commercial service is governed by MSC Regulations for Ammunitions and Explosives, NAVSEA SWO20-AG-SAF-010, and CFR Title 49 Parts 171-179 Hazardous Materials Regulations. The transshipment of ordnance and explosives on Navy vessels is governed by the provisions of NAVSEA OP 4/5 These regulations and procedures include such items as small boat use, dunnage, loading regulations, and responsibility for safety.

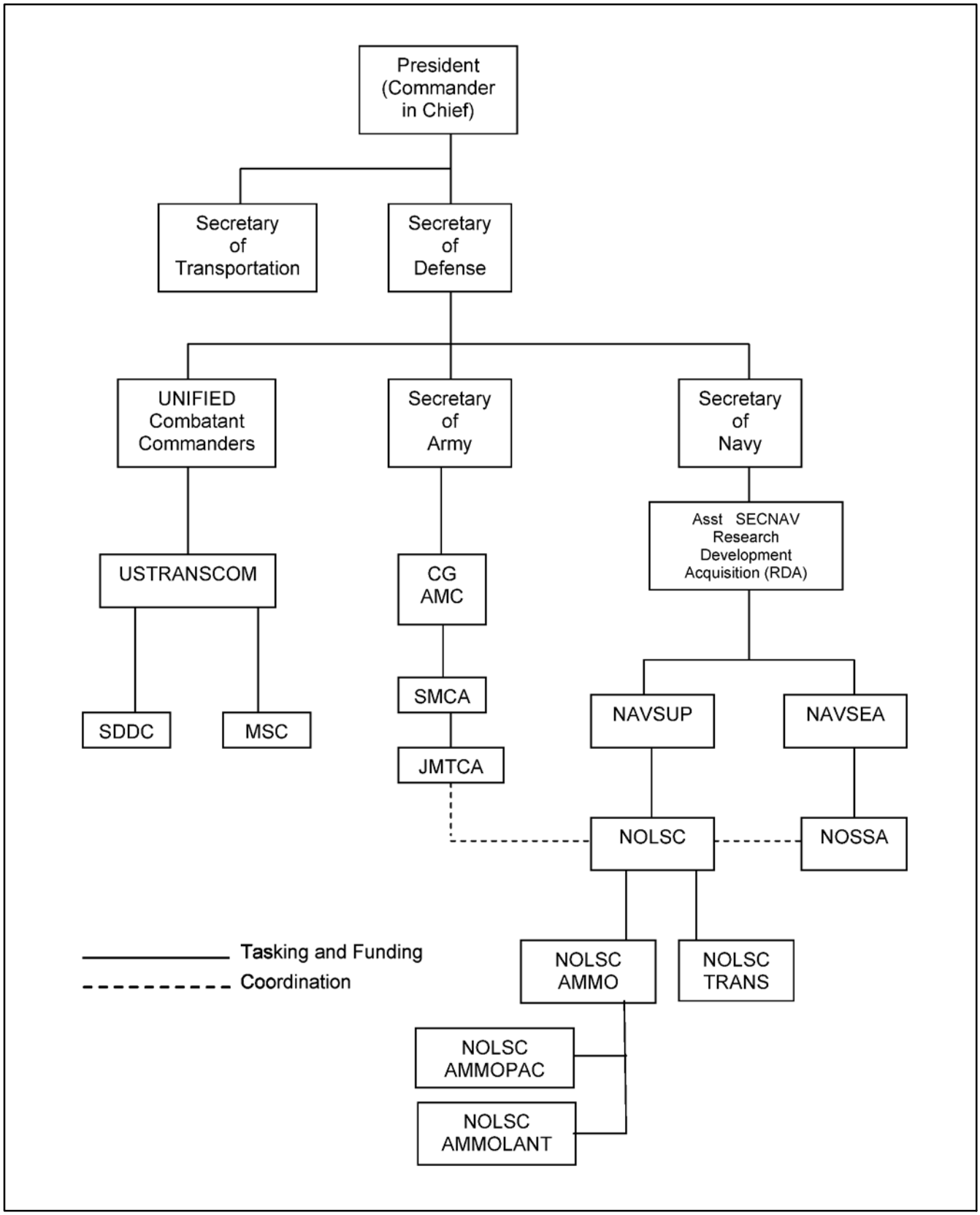

Figure 13-3-1. Transportation Management Organizational Relationships

CHAPTER 13.4

Environmental Management

Table of Contents

Paragraph	Subject	Page
13.4.1	General	13-4-1
13.4.2	Environmental Program	13-4-3

List of Illustrations

Figure	Title	Page
13-4-1	Environmental Management Organizational Relationships	13-4-4

CHAPTER 13.4

Environmental Management

13.4.1 General.

13.4.1.1 National Defense and Environmental Protection. The Navy's ability to accomplish its mission requires daily operations in the land, sea, and air environments. National defense and environmental protection are and must continue to be compatible goals. In order to accomplish this mission element, personnel must be aware of the environmental laws and regulations which have been established by Federal, State, and local governments. OPNAVINST 5090.1 discusses Federal regulations and DOD requirements which apply to Navy ships and shore activities.

13.4.1.2 Perspective. The primary focus of environmental management is to minimize the effect of non-nuclear explosive ordnance and their handling (production, maintenance, storage, transportation, use, and disposal) on the surrounding ecosystems. Even though there are personnel from current and past operations specifically assigned to environmental management positions at all echelons, anyone working with or around ordnance should consider themselves responsible for protecting the environment.

13.4.1.3 Responsibilities.

a. The CNO exercises general supervision and command authority for the application of Federal environmental regulations. Within the Office of the CNO (OPNAV) the Deputy CNO (DCNO) for Fleet Readiness and Logistics (N4) is responsible for supervising Navy environmental readiness matters, and coordinates environmental policy, programs and guidance which affect Navy mission. As such, the Deputy CNO Fleet Readiness (and Logistics):

(1) Monitors proposed Federal environmental legislation, Federal regulations and proposed rules, and coordinate Navy impact analyses, and ensure articulation of Navy positions and concerns in conjunction with the Navy Office of Legislative Affairs and the Assistant Secretary of the Navy, Energy, Installations and Environment.

(2) Establishes and regularly update policy, direct, and monitor progress of the Navy environmental and natural resources program.

(3) Serves as the OPNAV assessment sponsor for the environmental and natural resources program, and as the OPNAV resource sponsor for shore activity environmental and natural resources protection requirements.

(4) Coordinates with resource sponsors, Navy Comptroller (NAVCOMPT), DOD, and Office of Management and Budget (OMB) in the reconciliation of environmental compliance requirements vs. budgeted resources.

b. The NOSSA:

(1) Provides ordnance environmental expertise to the Navy.

(2) Provides program management, technical, and administrative support for the Navy through its Ordnance Environmental Support Office (OESO) per NAVSEAINST 5450.117.

(3) Supports the establishment of Navy ordnance environmental directives, and instructions. Serve as the NAVSEA single point of contact for ordnance environmental matters.

(4) Participates in Navy Explosives Safety Inspections (ESIs) to review ordnance environmental compliance.

(5) Provides the PM for NAVSEA ordnance environmental funding

c. NOSSA OESO:

(1) Ensures environmental concerns and criteria are considered and effectively integrated with explosives safety policy for ordnance operations.

(2) Ensures consistent positions, agreements, permit conditions, and responses to regulatory agencies on ordnance environmental issues, coordinating closely with affected shore activities, major claimants, and other Service representatives

(3) Serves as the primary Navy interface with Federal and State regulatory agencies on ordnance environmental issues.

(4) Coordinates exchange of ordnance environmental information among Navy shore activities.

(5) Provides assistance to facilities in dealing with regulatory agencies on ordnance issues as requested.

(6) Provides ordnance environmental data and information, technical review, and construction and installation environmental evaluations.

(7) Provides guidance, review, oversight and verification on the ordnance environmental and explosives safety aspects of munitions responses.

d. Commanding Officers of shore activities:

(1) Comply with applicable substantive and procedural Federal, State, and local environmental laws and regulations, and strive for improvements in all areas of pollution prevention.

(2) Cooperate with Federal, State, and local environmental regulatory officials.

(3) Integrate environmental compliance requirements into all levels of activity management through the application of environmental management systems and by requesting sufficient resources to support environmental and natural resources programs.

(4) Apply for all Federal, State, and local permits, where appropriate, only if you are a Commanding Officer of a host activity. Commanding Officers/Officers in Charge of host activities are responsible for all aspects of environmental, natural resources, and cultural and historical preservation resource compliance on their installations. Commands cannot delegate this responsibility. All Navy hosts and tenants shall develop agreements, or include in existing agreements, roles and responsibilities with respect to environmental compliance. Such agreements will include pollution prevention, environmental compliance evaluations, environmental planning documentation, contact with regulatory agencies, payment of fines/fees, permit signatures/duties, hazardous waste management, emergency planning and community right-to-know implementation, training, corrective and/or response actions, etc. Where appropriate, commands will establish environmental compliance boards consisting of host and tenant management personnel. Commands may delegate authority for portions of environmental program management

to senior managers consistent with "by direction" signature authority. Host commands may delegate authority delegate authority to tenant commands, but overall responsibility shall remain with the host Commanding Officer.

(5) Plan, program, budget, and allocate funds for environmental protection costs.

13.4.1.4 Organizational Relationships. The organizational relationships of the commands/offices responsible for environmental management are depicted in Figure 13-4-1.

13.4.2 Environmental Program. The Environmental Program policies, definitions, and procedures differ from location to location.

13.4.2.1 Hazardous Materials and Waste Management. The terms "hazardous materials" and "hazardous waste" have specific legal and scientific definitions in federal regulations. Hazardous Wastes (HW) are defined and regulated under the Resource Conservation and Recovery Act (RCRA), Subtitle C, as amended by the Hazardous and Solid Waste Amendments of 1984. RCRA requires cradle to grave management of HW through a recordkeeping system that requires the manifesting of HW shipments from the generation point to disposal. The Federal Facility Compliance Act (FFCA) of 1992 requires that federal facilities comply with all provisions of Federal, State, interstate, and local hazardous waste laws and regulations. FFCA required the Environmental Protection Agency (EPA), in consultation with DOD, issue regulations on the application of RCRA to Waste Military Munitions (WMM). EPA issued the Military Munitions Rule (MMR) (62 FR 6621) in 1997 and the MMR regulations define when military munitions become waste under RCRA and how these WMM will be managed. The MMR describes the minimum requirements for management of waste military munitions on a Federal level. However, RCRA allows States and Territories to impose standards that are more stringent than those in the Federal program.

13.4.2.2 Air Pollution Prevention. The Clean Air Act requires the EPA to set binding National Ambient Air Quality Standards, which define how clean the air must be. The Clean Air Act amendments of 1990 represent the most recent revisions to the Clean Air Act. Standards have been set for six primary pollutants: carbon monoxide, lead, ozone, oxides of nitrogen, sulfur dioxide, and particulates (PM-10, particulate matter 10 microns in size or less). Air quality standards are achieved, maintained, and enforced by the states through State Implementation Plans (SIPs). SIPs specify emission limits and compliance schedules for pollution sources and are tailored to the needs of the different air quality control regions. This program could affect ordnance activities involved in ordnance production, maintenance, and disposal processes which produce air pollutant emissions.

13.4.2.3 Wastewater Management. The Federal Water Pollution Control Act was issued to ensure restoration and maintenance of the integrity of the nation's navigable waters. The act incorporates provisions for regulating both domestic and industrial waste waters. The Clean Water Act (CWA) makes it illegal for any person, including federal facilities, to discharge pollutants from a point source into the waters of the U.S. without a permit. The CWA Amendments of 1987 require federal agencies to ensure consistency with state regulations for the control of non-point sources of water pollution such as runoff from industrial, residential, and agricultural lands. National Pollutant Discharge Elimination System (NPDES) permits are required for industrial facilities. An important component of the NPDES permitting process is the pretreatment program which sets standards for

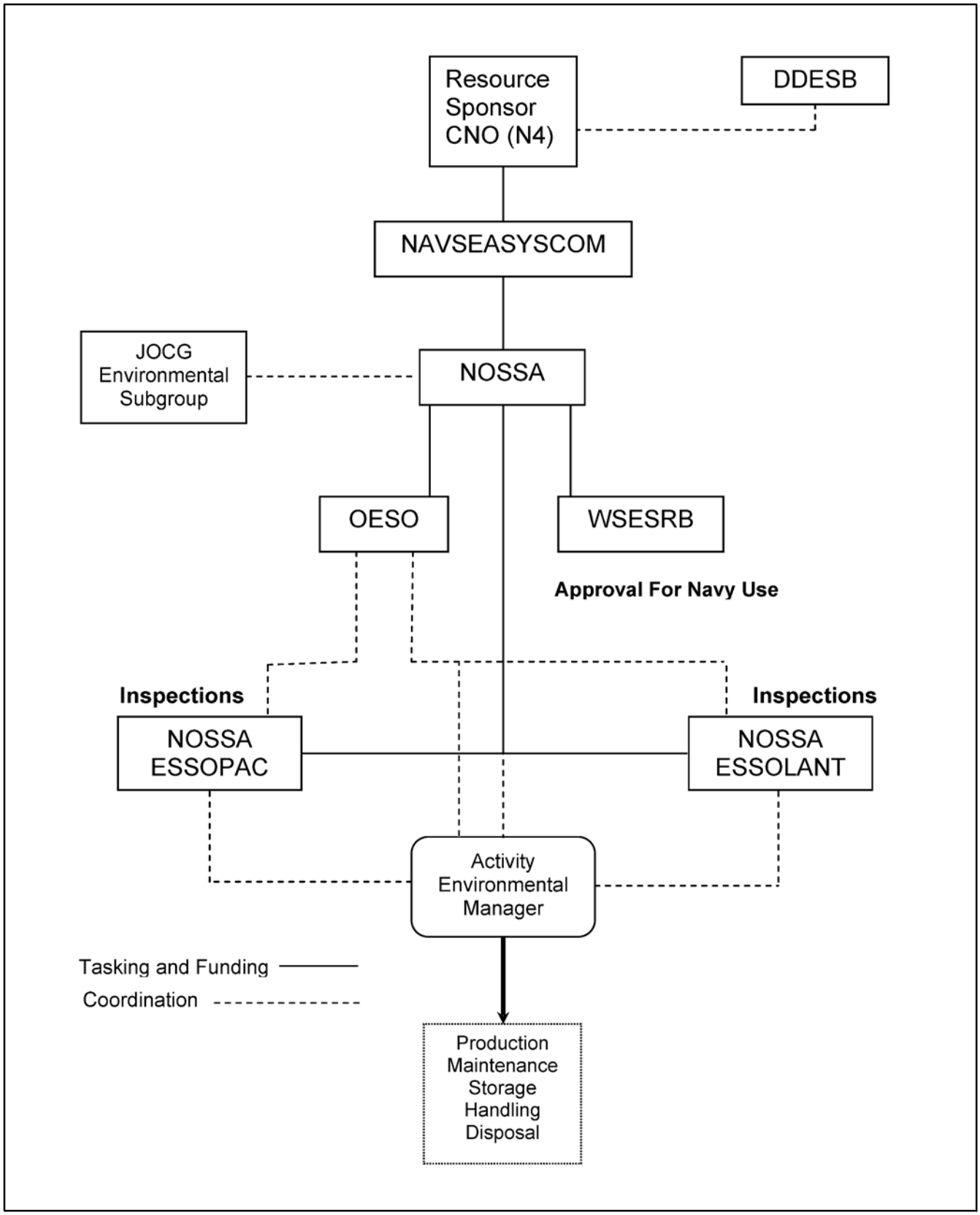

Figure 13-4-1. Environmental Management Organizational Relationships

the control of waste from indirect discharges such as those from industrial sources of pollution which discharge effluent to municipal wastewater treatment facilities rather than directly into water bodies. This program is a specific concern for those ordnance activities involved in ordnance production, maintenance, and disposal processes which discharge pollutants from a point source or produce non-point source water pollution.

13.4.2.4 Ocean Dumping. Intentionally dumping or disposal of ordnance at sea is prohibited except to safeguard life or safety of the ship. Requirements for emergency jettison of ordnance at sea are discussed in NAVSEA OP 4.

13.4.2.5 Installation Restoration (IR)/Munitions Response (MR). The Comprehensive Environmental Response, Compensation, and Liability Act (CERCLA) requires the identification, investigation and clean up or control of releases from past operations and spills at DON activities or that occurred under DON control. While the IR program addresses releases of hazardous substances from past waste disposal operations and past hazardous material spills, the purpose of the MRP is to address munitions and explosives of concern (MEC) and munitions constituents (MCs) used or released on sites from past operations and activities. MEC includes Unexploded Ordnance (UXO), discarded military munitions (DMM), and MC in high enough concentrations as to present an explosive hazard. The policies and procedures from the IR program apply to sites under the MR program, however, munitions responses address for unique explosives safety hazards associated with these sites. The investigation and cleanup of past contamination of MEC and MC will be conducted in a manner that is consistent with the IR Program and integrates explosives safety requirements.

SECTION 14

Ordnance Demilitarization/Disposal Management

Table of Contents

Chapter	Subject	Page
14.1	Demilitarization Responsibilities	14-1-1
14.2	Demilitarization/Disposal Authorization Process	14-2-1

CHAPTER 14.1

Demilitarization Responsibilities

Table of Contents

Paragraph	Subject	Page
14.1.1	General	14-1-1
14.1.2	Responsibilities	14-1-2

List of Illustrations

Figure	Title	Page
14-1-1	Demilitarization/Disposal Management Organization Relationships	14-1-3

CHAPTER 14.1

Demilitarization Responsibilities

14.1.1 General.

14.1.1.1 Policy.

a. Department of Defense (DOD) 4160.21-M provides policy and procedures for the utilization and disposition of excess, surplus, and foreign excess property, and specific reporting requirements for disposable property. It further defines the responsibilities of Defense Logistics Agency (DLA), Defense Reutilization and Marketing Service (DRMS), Defense Reutilization and Marketing Regions (DRMRs), Defense Reutilization and Marketing Offices (DRMOs) and the Inventory Control Points (ICP) in administering and/or accomplishing disposition of excess and surplus properties with interfacing organizations.

b. DOD 4160.21-M-1 identifies the items and categories of property requiring demilitarization, specifies their degree of demilitarization, and provides instructions for their transfer to the DRMO after demilitarization or declassification. Ordnance and related classified inert items are categories of property not authorized for transfer to a DRMO prior to demilitarization, declassification or inspection and certification as inert.

c. DOD 5160.65-M details the specific responsibilities of the Single Manager for Conventional Ammunition (SMCA) and the Military Services for Demilitarization (DEMIL) and disposal of ordnance and related inert items. It further states that non-nuclear ordnance DEMIL and disposal will be accomplished in the most efficient and cost effective manner (usually at the generating activity if the capability exists), and makes the Military Services responsible for all DEMIL accomplished at their respective activities.

d. Appendix I defines the policy, authority and responsibility for management of the Navy disposition process for excess, obsolete, unserviceable, and waste military munitions generated or received at Navy activities. The disposition process includes DEMIL, recycling, declassification and disposal.

e. Naval Sea Instruction (NAVSEAINST) 8027.2 is a Joint Service instruction which establishes DEMIL and disposal policies, responsibilities, and procedures relating to requirements governing the concept, research, development, engineering, and release for production of all new or modified ordnance items and components. The instruction includes the format and content requirements of a DEMIL Plan.

f. Naval Supply Systems Command (NAVSUP) P-724 provides the policy and procedures for management of Ammunition and Explosives (A&E), classified inert and unclassified inert ammunition items authorized for disposal from the active inventory account to an applicable disposal account.

g. Navy Military Munitions Rule (MMR) Implementation Policy (MRIP) Chief of Naval Operations (CNO) Memo Ser N457F/452-98 of 27 July 1998, provides guidance to ensure compliance with the MMR as well as guidelines for the management of Waste Military Munitions (WMM). In addition the MRIP:

(1) Further defines when military munitions become waste.

(2) Delineates responsibilities and authorities of the Designated Disposal Authority (DDA)

(3) Dictates a DDA Evaluation process.

(4) Dictates that DOD Components achieve uniformity in logistical accounting of WMM.

(5) Outlines emergency destruct and emergency response authority.

(6) Codifies storage standards.

14.1.1.2 Perspective. The policies in the directives above and environmental laws, have molded the perspective of those involved in disposal management into one of removing ordnance items from Navy active inventory in the most environmentally friendly and cost effective manner. The drive is to consider alternate users of the items; acceptable, alternate uses for the items, or at least some of its components; or environmentally friendly ways of demilitarizing/disposing of all components of the item, with minimal transportation, as a last resort.

14.1.1.3 Organizational Relationships. Figure 14-1-1 depicts the organizational relationships of those involved in DEMIL management.

14.1.2 Responsibilities.

14.1.2.1 Acquisition Program Executive Officers (PEOs)/Program Managers (PMs).

a. The DEMIL process actually begins at the beginning of the ordnance item's lifecycle. PEO/PM will ensure that good engineering practices are used to address all aspects of the lifecycle, including system's DEMIL and disposal. During system design, conventional ammunition designers can facilitate optimal DEMIL methods and resource reclamation and reuse by implementing Design for Demilitarization (DFD). This includes designs for conventional ammunition that: facilitates disassembly and access to energetic materials; use energetic materials and components having reclamation or reuse potential; efficiently accommodate existing DEMIL processes; reduce the use of environmentally sensitive materials; and enhance safety for DEMIL operators. PEO/PM will implement DFD by including in their acquisition documentation (i.e., pre-Milestone A) how they intend to address DEMIL design requirements throughout system design.

b. The PEO/PM, as part of the process for obtaining Approval for Navy use from the Weapons System Explosives Safety Review Board (WSESRB), is responsible for developing and submitting a proven DEMIL plan as required by NAVSEAINST 8027.2, that will be implemented at any time during the projected life span of the item.

c. When ordnance items are presented for DEMIL without a DEMIL plan or when the DEMIL plan on file is no longer acceptable, the Demilitarization Program Office contacts the item's Acquisition Program Office, if still in existence, to work with them and their engineering agent(s) to develop a DEMIL plan.

d. Develop and submit a budget requirement for the disposal of any residual hazardous material generated from their weapons system and for any pre-processing of Munition List Items (MLIs) to include non-MLI ordnance managed items required prior to release for DEMIL or disposal. PMs shall manage program funds for the field activities in support of these program requirements, and evaluate and minimize program expenses.

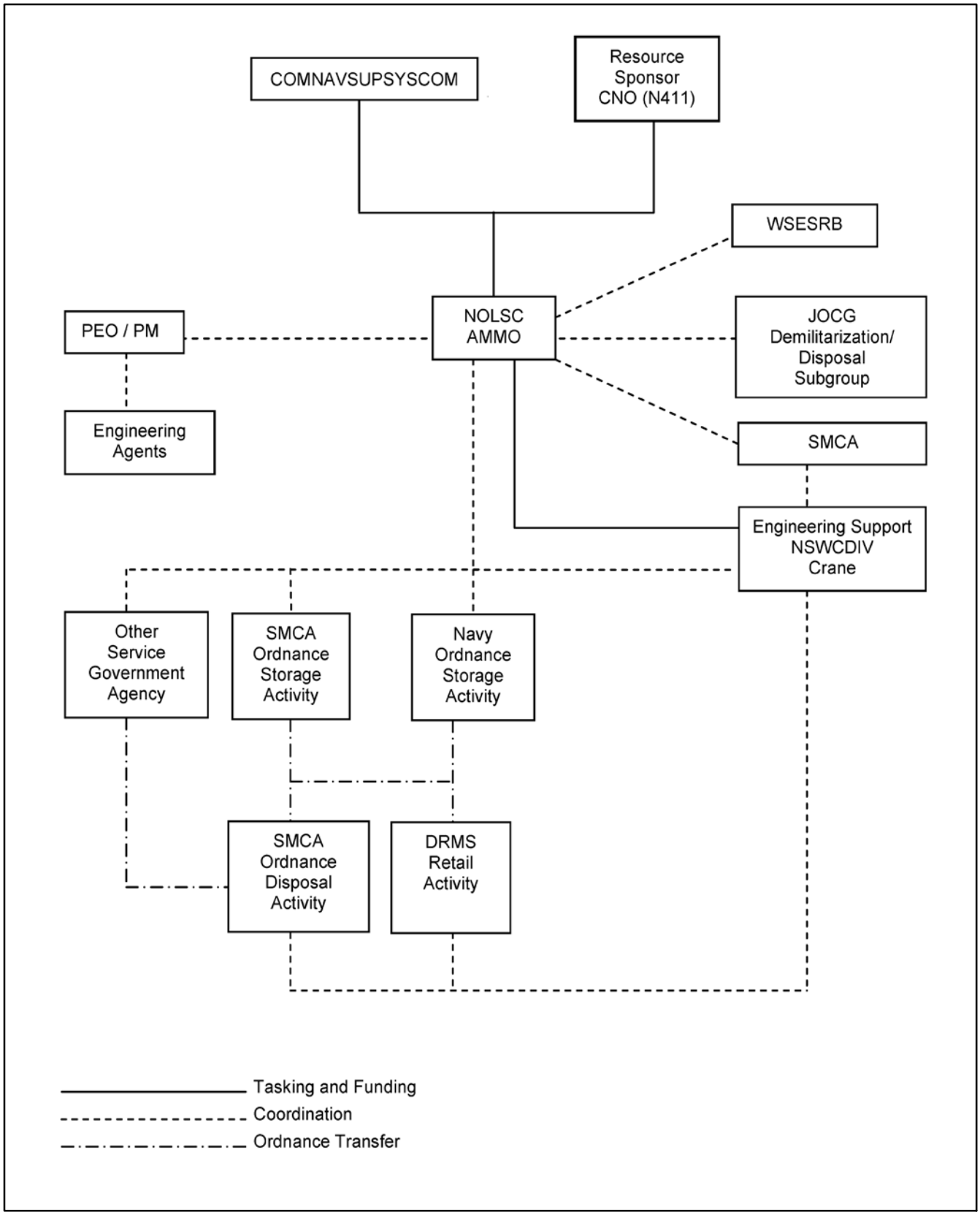

Figure 14-1-1. Demilitarization/Disposal Management Organization Relationships

e. Coordinate with the Naval Supply Systems Command Global Logistics Support (NAVSUP GLS AMMO) DEMIL coordinator and Navy field activities for the disposal of hazardous material and the pre-processing of munition list items prior to being released for DEMIL and disposal.

14.1.2.2 Ordnance DEMIL PM. Appendix I defines the DEMIL program and responsibilities for the Navy. NAVSUP P-724 implements the OPNAV instruction. The program responsibility has been assigned to Commander, Naval Supply System Command (COMNAVSUPSYSCOM) which has designated the NAVSUP GLS AMMO to perform functions of worldwide management of DEMIL, recycling, declassification and disposal of excess, obsolete, unserviceable, and waste military and foreign munitions generated at Navy activities with the exception of large strategic rocket motors. NAVSUP GLS AMMO has the following responsibilities.

a. Develop, issue, and implement policies and procedures for the worldwide management and operations of the Navy munitions DEMIL, recycling, declassification and disposal program.

b. Review DEMIL and disposal plans developed as part of the integrated logistics support plans for new, converted or modified Navy munitions. Development and approval of DEMIL plans will be accomplished prior to Operational Test and Evaluation (OT&E) of all new, converted or modified munitions items.

c. Maintaining a close liaison with SMCA regarding DEMIL and disposal issues.

d. Maintains close liaison with program offices and Navy field activities to coordinate the disposal of hazardous material and the pre-processing of MLIs to include non-MLI ordnance managed items required prior to being released for DEMIL and disposal.

e. Maintain a centralized inventory management system for Navy munitions DEMIL, recycling, declassification and disposal actions. This system shall provide complete asset visibility with a transaction audit trail to ensure proper accountability, management and control.

f. Identify and confirm excess Navy ammunition items via the annual ordnance stratification with acquisition program managers and their acquisition agents. Support program managers/acquisition agents in the development of a 5-year forecast of ammunition DEMIL/disposal requirements based on anticipated obsolescence and projected delivery of replacement ordnance. Consolidate acquisition PM 5-year forecasts and provide to SMCA.

g. Screen items for which the Navy no longer has use through other services and Foreign Military Sales (FMS) program customers for potential use, recycling or reclamation, prior to requesting disposition from SMCA. When received, provide disposition instructions to munitions custodians.

h. Assure DEMIL, recycling, declassification and disposal of munitions and related hazardous wastes are accomplished in accordance with Federal (to include host nation), State, DOD, and Service explosives safety and environmental regulations, policies and directives and maximize efficiency and resource conservation.

i. Ensure that all proposed changes to DOD 4160.21-M-1, the Defense Demilitarization Manual, DOD 4160.21-M, the Defense Reutilization and Marketing Manual, or Military Standard Requisition and Issue Procedure (MILSTRIP)/Military Standard Transportation Reporting and

Accounting Procedure (MILSTRAP) regulations which may affect excess munitions inventory management or processing, are coordinated with the Navy Munitions DEMIL PM (NAVSUP GLS AMMO) and the Navy DDAs.

j. As the lead Navy DDA, define procedures for all Navy DDAs to ensure consistency in management.

14.1.2.3 Navy Demilitarization (DEMIL) Technical Support Office. Naval Surface Warfare Center Division (NSWCDIV) Crane is tasked by the DEMIL PM at NAVSUP GLS AMMO to provide the following engineering support functions.

a. Provide support in developing and implementing Navy DEMIL Program Policies.

b. Provide support in matters of operations pertaining to safety, environmental, and MMR requirements in coordination with the DEMIL PM.

c. Provide engineering and technical support to Navy activities worldwide. This support shall include but not be limited to: identifying ammunition, providing munitions disposition instructions and resolving issue with processing inert material.

d. Serve as the Navy DEMIL Program's representative on the WSESRB.

(1) Reviewing monthly WSESRB data packages and provide comments.

(2) Assist In-Service Engineering Agents (ISEAs) in the preparation of a demil plan for the WSESRB data package.

e. Review and approve DEMIL and disposal plans developed as part of the integrated logistics support plans for new, converted or modified Navy munitions.

(1) Development, review and approval of DEMIL plans shall be accomplished prior to OT&E of all new, converted or modified munitions items.

f. Serve as the Navy's alternate Lead DDA, evaluating munitions in accordance with the Munitions Rule Implementation Policy.

g. Provide DEMIL program support by participating on Joint Ordnance Commanders Group (JOCG) DEMIL Working Groups and Integrated Product Teams (IPTs).

h. Provide disposition support to Fleet activities, contractors and other Government Agencies for access Navy non-coded and non-stock munitions items or components.

14.1.2.4 Field Activities. Activities generating materials for disposition and processing Disposal Release Orders (DROs) are subject to the policy guidance and procedural direction provided by a wide range of instructions. These include DOD 4160.21-M, DOD 4160.21-M-1, NAVSEA OP 5, NAVSEAINST 8027.2, NAVSUPINST 4440.156, NAVSUP P-485, NAVSUP P-724, and the Navy MMR Implementation Policy, 27 July 1998. From these directives, the Field Activities generating excesses are responsible for the following:

a. Requesting disposition authorization for ordnance items which have been designated obsolete, unserviceable, uneconomically repairable, or surplus/excess to requirement of technical manager.

b. Coordinate with the NAVSUP GLS AMMO DEMIL coordinator for the disposal of hazardous material generated from a weapons system and also for any required pre-processing of MLIs and non-MLI ordnance managed items prior to being released for DEMIL and disposal.

c. Preparing Disposal Turn-In Documents (DTIDs) upon receipt of a DRO from the Inventory Manager (IM), or for such material that meets criteria for local DEMIL without need of prior reporting to the IM. DTIDs are required for all items, explosive ordnance or inert, authorized for DEMIL.

d. Processing expeditiously all DROs.

14.1.2.5 Inventory Managers. DOD 4160.21-M, NAVSEAINST 8027.2, NAVSUP P-485, and NAVSUP P-724 individually and collectively contain the responsibilities and procedures to be followed by the IMs, including the following:

a. Providing DROs to activities generating excess materials.

b. Defining, in conjunction with the technical manager, what constitutes declassification and including such information in the DRO.

c. Identifying on, or transmitting with, the DRO, the major key points of the item which must be demilitarized, designating the materials containing precious metals, and providing a Save List of subassemblies or components subject to reclamation in accordance with NAVSUPINST 4440.156.

14.1.2.6 Single Manager for Conventional Ammunition Responsibilities. The SMCA is assigned the following disposal responsibilities by Department of Defense Instruction (DODI) 5160.68.

a. DEMIL and dispose of all conventional ammunition, including non-SMCA managed items, for which capability, technology, and facilities exist to complete DEMIL and disposal. The SMCA shall accept these items into the DEMIL stockpile with appropriate technical data, and fund a joint-Service research and development program for developing the capability where capability, technology, and facilities do not exist.

b. Acquire equipment and facilities required for demilitarizing and disposal of conventional ammunition at SMCA facilities on a non-reimbursable basis.

c. Develop a comprehensive DEMIL and disposal plan annually.

d. Serve as the DOD DDA for managing WMM according to 40 COM part 266, Subpart 266, Subpart M. Coordinate WMM determinations and actions with Military Service-level DDAs.

CHAPTER 14.2

Demilitarization/Disposal Authorization Process

Table of Contents

Paragraph	Subject	Page
14.2.1	General	14-2-1
14.2.2	DEMIL Authorization	14-2-1
14.2.3	Processing Disposal Release Orders	14-2-2

CHAPTER 14.2

Demilitarization/Disposal Authorization Process

14.2.1 General. This section provides an overview of the DEMIL/disposal authorization process. More detailed information can be found in NAVSUP P-724.

14.2.2 DEMIL Authorization. There are two methods used for authorizing munitions/munition items for DEMIL: IM DEMIL Release Orders (DROs) and Local DEMIL Authorization.

14.2.2.1 Inventory Manager DROs. DROs are provided to activities holding DEMIL and disposal candidates. The DRO directs movement of these assets to either the servicing DRMO, or Army activity, or to another Navy activity.

a. NAVSUP GLS AMMO OIS-W Generated DROs.

(1) An OIS-W DRO provides the holding activity both direction and authority to move DEMIL and disposal candidates.

(2) DROs are generated as a result of the following processes:

(a) For designated Major Command activities or other activities identified in NAVSUP P-724, the monthly OIS-W automated "H" sweep selects "H" Condition Code (CC) assets as DEMIL and disposal candidates and either initiates a DRO, or for select items notifies the IM that an "H" condition asset is on hand.

(b) DROs may be issued following the annual Navy Stratification process, in response to a Report of Excess/Disposition Request submitted by an activity, or as directed by the acquisition program manager following an ordnance assessment that declared the material unsafe or potentially unsafe. An ISEA under the direction of the Acquisition Program Manager performs ordnance assessment testing.

(3) There are three types of DROs. DROs for A&E including classified non-explosive ordnance material will have a Document Identifier Code (DIC) of "BGD" or "BGJ". DROs for unclassified non-explosive ordnance material will have a DIC of "A5J".

(a) Condition Codes A, B, C, D, E, F, G, H, N, P, and V are acceptable for DICs "A5J" and "BGD" DROs. DIC "BGJ" is not used for CC "H". DROs will not be issued for items in CC J, K, L and M. Requests received by NAVSUP GLS AMMO IMs for disposition of items in these CCs may be returned to the originating activity for the proper physical CC assignment or may be rejected and returned by the DRMO for the proper classification.

14.2.2.2 Local DEMIL Authorization.

a. Local authority is not authorized for AE or classified non-explosive ordnance material (DEMIL codes of G or P), regardless of value. Contact the appropriate IM for disposition as listed on the NAVSUPSYSCOM website, https://www.ois.disa.mil.

b. Unclassified non-explosive DEMIL and Disposal Candidate with a value less than $100.00 can be processed by the holding activity using local authority.

14.2.3 Processing Disposal Release Orders. NAVSUP P-724 provides guidance to process DROs. Activities holding DEMIL and disposal material shall perform the following actions upon receipt of a DRO:

a. Apply standard Notice of Ammunition Reclassification (NAR) compliance procedures. NAR messages may provide additional guidance or shipping direction.

b. Identify type of DRO. The DIC and Supplemental Address (SUPADD) will determine the required action.

c. Verify the DRO quantity and CC matches on-hand assets. If the quantity or CC does not match, contact the appropriate IM as listed on the NAVSUPSYSCOM website.

d. Use the original document number of the DRO throughout the reporting process.

e. See NAVSUP P-724 for situational formatting for DRO confirmation procedures including DRO follow-ups, cancellations and denials.

f. DD Form 1348-1 (per NAVSUP P-724).

(1) A&E or Classified Non-Explosive Ordnance Material. Upon receipt of a DRO for A&E or classified non-explosive ordnance material, prepare a DD Form 1348-1 and ship the material as directed by the DRO.

(2) Attach the following information to the DD Form 1348-1 as applicable:

(a) Save list identifying parts/components for reclamation (CC “P”) items.

(b) Key Point list identifying “Key Points or Lethal Parts” (DEMIL Code “C” items).

(c) Special DEMIL instructions for items with a DEMIL Code of “F”.

(3) Unclassified Non-explosive Ordnance Related Material. Upon receipt of a DRO for unclassified non-explosive ordnance related material with a blank SUPADD, the holding activity shall certify that the material contains no items of a dangerous or hazardous nature and transfer to their servicing DRMO.

(4) Transportation Accounting Codes (TAC). In order to segregate and monitor transportations movements for DEMIL and disposal, cite the appropriate DEMIL Transportation Account Codes, listed in NAVSUP P-724 on all DD Form 1348-1 Disposal Turn-In Documents.

(5) For material being transferred to the Army, insert “RRDA for Evaluation” in BLK 4 on DD Form 1348-1.

g. Use the holding activities standard shipping procedures for DEMIL and disposal material movements.

h. DEMIL Code Challenges: The acquisition PMs engineering agent provides technical data supporting all ordnance items. This information is entered into the Federal Logistics Information System (FLIS) during the cataloging process. OIS-W and other subsystems also maintain technical data. DEMIL codes within FLIS and the ordnance subsystems may differ and result in a challenge by the local DRMO. NAVSUP GLS AMMO responds to DEMIL code challenges for the Navy, and following a review by the engineering agent, submits changes to FLIS as appropriate.

SECTION 15

Security Assistance Program Management

Table of Contents

Chapter	Subject	Page
15.1	Foreign Military Sales	15-1-1
15.2	Standardization Agreements	15-2-1

CHAPTER 15.1

Foreign Military Sales

Table of Contents

Paragraph	Subject	Page
15.1.1	Legislative Authority	15-1-1
15.1.2	Responsibilities	15-1-1
15.1.3	Organizational Relationships	15-1-2
15.1.4	FMS Case Development Process	15-1-2

List of Illustrations

Figure	Title	Page
15-1-1	Security Assistance Program Organizational Relationships	15-1-3

CHAPTER 15.1

Foreign Military Sales

15.1.1 Legislative Authority. Authorizations and appropriations for Foreign Military Sales (FMS) are provided primarily by the Foreign Assistance Act (FAA) of 1961, as amended, the Arms Export Control Act (AECA) of 1976, as amended, and the annual appropriation acts for Foreign Operations, Export Financing and Related Programs.

15.1.2 Responsibilities. Department of Defense (DOD) 5105.38-M, Security Assistance Management Manual, describes responsibilities and relationships of United States Government departments and agencies for security assistance programs. Following are security assistance responsibilities within the Department of the Navy (DON).

15.1.2.1 Navy International Programs Office (IPO). The principle DON organization for handling security assistance matters is Navy IPO. Under the direction of the Assistant Secretary of the Navy (ASN) for Research, Development and Acquisition (RD&A), Navy IPO formulates and implements the DON security assistance policy and interfaces with other government agencies. Navy IPO establishes DON procedures for Letter of Acceptance (LOA) development, execution and closure and carries out sales negotiations for all types of Navy FMS requirements. The Director, Navy IPO is also the Deputy Assistant Secretary of the Navy for International Programs (DASN/IP) and serves as an advisor to the Chief of Naval Operations (CNO), assigned an OPNAV code, N5T.

15.1.2.2 NAVSUP GLS AMMO is responsible for preparing impact statements for all FMS cases containing conventional ordnance for the cognizant Program Manager (PM).

15.1.2.3 PM/Case Manager (CM). The ammunition PM/CM is responsible for planning, executing and closing all ordnance FMS cases, as assigned by Program Executive Office for Integrated Warfare Systems (PEO IWS) International Programs Directorate (PEO IWS 4), Office of International Programs (SEA-63). The PM/CM initiates this process by conducting a technical screening and obtaining an impact statement from NAVSUP GLS AMMO. The CNO (OPNAV 411) has final decision authority on all sales originating from Navy stocks.

15.1.2.4 NAVSUP WSS maintains logistic and financial data in the Management Information System for International Logistics (MISIL); reports logistics and financial data to the Defense Finance and Accounting Service (DFAS) and FMS customers, and assists with closure of all FMS cases.

15.1.2.5 PEO IWS 4 performs Case Administering Office (CAO) functions established by OPNAVINST 4900.149 for cases assigned to Naval Sea (NAVSEA) Systems Command. They also are available to assist Case Managers in planning, executing and closing their FMS cases; maintaining current financial data in the Standard Accounting and Reporting System (STARS) and administering the FMS Admin budget for NAVSEA.

15.1.3 Organizational Relationships. Figure 15-1-1 identifies the organizations involved in the Security Assistance Program for non-nuclear ordnance and their relationship to each other.

15.1.4 FMS Case Development Process. Processing an FMS case takes coordination between many different DON activities. The following steps are a representation of a normal progression of an FMS case.

a. Upon receipt, the Letter of Request (LOR) is validated by Navy IPO to ensure the potential customer is an eligible FMS recipient, that the item requested may be sold, and that proper submission channels were followed. Navy IPO assigns the case designator, establishes the case record in the Defense Security Assistance Management System (DSAMS) and forwards the LOR and a DSAMS task to SEA-63.

b. SEA-63 receives the LOR and the DSAMS task and prepares a request for technical screening that is sent to the PM.

c. The PM receives the request for technical screening. In response the PM conducts the technical screening by research, developing response documents related to the case and tracks the progress of the request for technical screening. If the foreign request does not conform to all DON requirements for the foreign customer in question, the LOR is sent back to the originator through channels. Additional information may be required from the customer and/or the request may be rejected for various reasons. In all cases, comments are posted in DSAMS in order to maintain an historical record.

d. The PM reviews the request with regard to asset posture and determines the recommended method of resolution for completion of the case. If the asset is determined to be in sufficient quantity to support stock issue on a Replacement-in-Kind basis (based on the NAVSUP GLS AMMO Impact Statement), the PM will obtain asset costs and respond accordingly. If the asset requires procurement, the PM will obtain engineering costs from the appropriate Engineering Agent (EA) and responds appropriately.

e. The EA prepares an engineering estimate in accordance with the recommended guidance provided by the PM. The engineering estimate is included in the PM's response to Navy IPO.

f. The Acquisition Engineering Agent (AEA) obtains hardware pricing from Ordnance Information System (OIS) and Program Plan Requirement documents.

g. The PM provides the draft LOA data to SEA-63 who reviews it to ensure compliance with all FMS policies and procedures, including proper NAVSEA disclosure review.

h. NAVSEA then forwards the draft LOA data to Navy IPO in DSAMS. Navy IPO coordinates the package with all other appropriate U.S. government offices and forwards the LOA to the customer country.

i. If the requesting country or international organization accepts the terms of the LOA, they sign it and return it Navy IPO for implementation to NAVSEA and the CM. If the requesting country or international organization does not accept the LOA, further negotiations are conducted or the LOA is cancelled.

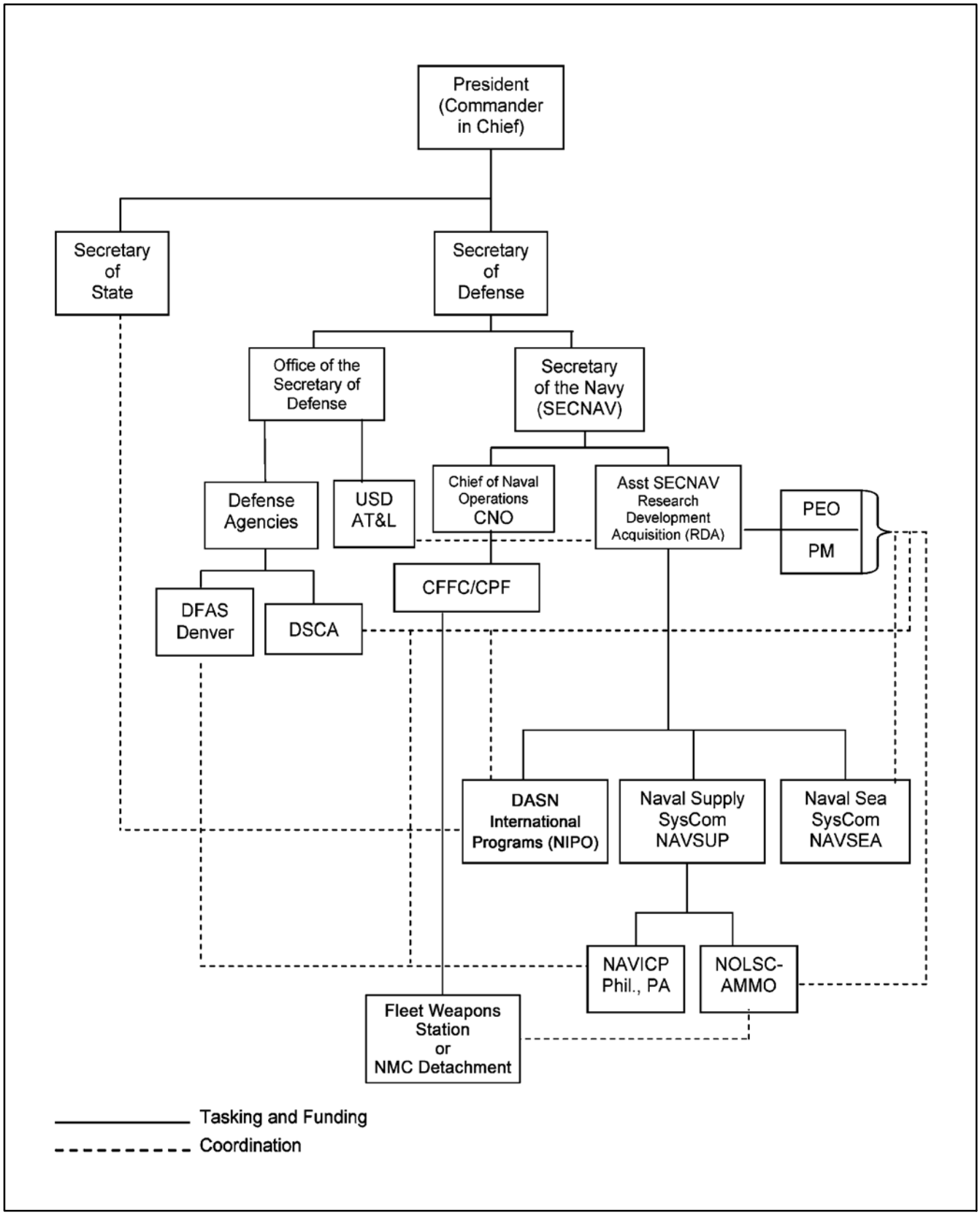

Figure 15-1-1. Security Assistance Program Organizational Relationships

CHAPTER 15.2

Standardization Agreements

Table of Contents

Paragraph	Subject	Page
15.2.1	Definition	15-2-1
15.2.2	Standardization Areas	15-2-1
15.2.3	Application of Civilian Standards	15-2-1
15.2.4	Languages	15-2-2
15.2.5	Measurement	15-2-2
15.2.6	Interservice Ammunition Working Group	15-2-2

List of Illustrations

Figure	Title	Page
15-2-1	Ordnance Standardization Agreements	15-2-3

CHAPTER 15.2

Standardization Agreements

15.2.1 Definition. A North Atlantic Treaty Organization (NATO) STANAG is defined as the record of an agreement among several or all of the member nations of NATO to adopt like or similar military equipment, ordnance, supplies and stores; and operational, logistics, and administrative procedures. National acceptance of a NATO allied publication issued by the NATO Standardization Agency (NSA) may be recorded as a STANAG.

15.2.2 Standardization Areas. As described in the STANAG governing instruction Army Ammunition Plant (AAP)-3, the three main areas of standardization are interdependent. However, it frequently occurs that a single working group under the direction of one Tasking Authority (TA) is the appropriate body to effect standardization of a specific matter which involves two or all three main areas. It is the responsibility of the working group TA to ensure that when it undertakes work outside its stated area, the concurrence of all other relevant TAs is obtained and that thereafter they are kept informed of all progress. There are three main areas of standardization.

15.2.2.1 Operational. Operational standardization (doctrine, tactics, and procedures) is under the tasking authority of the Military Committee (MC).

15.2.2.2 Material. Material standardization is under the tasking authority of the Conference of National Armaments Directors (CNAD).

15.2.2.3 Administrative. Administrative standardization is normally placed under an appropriate tasking authority on a case-by-case basis.

15.2.3 Application of Civilian Standards. As a general rule, NATO should apply the following outline strategy with respect to the future application of civilian standards.

a. NATO STANAGs shall only be developed when the respective requirements are not covered by recognized civilian standards.

b. The following general order of precedence shall be applied when selecting civilian standards for purposes of NATO standardization.

(1) International Organization for Standardization (ISO).

(2) International Electrotechnical Commission.

(3) International Telecommunication Union.

(4) European Standards, such as Euronorm and European Telecommunication Standards (ETS).

(5) Regional standards.

(6) National standards.

c. International databanks and the international system for the classification of standards, ICS, shall be used to identify relevant civilian standards which must be studied for suitability for purposes of NATO standardization, taking into account regional variances.

d. Each STANAG shall be supplemented by a statement identifying the civilian standard(s) forming the basis of the agreement, or confirming that no suitable civilian standard(s) exists. Civilian standards may be adopted for purposes of NATO standardization by referencing the applicable civilian standardization organization, number, title and date of issue, under a STANAG cover sheet. Additional military augmentations or limitations may be specified: in the standard being adopted under the covering STANAG, in the standard's supplement, or in the covering STANAG itself.

15.2.4 Languages. All STANAGs are promulgated in both NATO official languages, English and French. For STANAGs that contain large technical annexes and appendices with very little text, the translation of those annexes and appendices will be subject to mutual agreement between the TA and the nations concerned. Their translation may be accomplished by the nations or NATO, as determined by the TAs.

15.2.5 Measurement. The International System of Units as defined by the ISO (ISO 1000) is to be the primary system used in NATO standardization documents. If another system is used, it will be stated.

15.2.6 Interservice Ammunition Working Group. I-AMMOWG establishes doctrine and procedures that allows ammunition interchange to operate smoothly among NATO nations. I-AMMOWG thus produces the "NATO Land Forces Ammunition Interchangeability Catalogue (AOP-6)." This catalog forms a significant portion of the NATO Ammunition Standardization Database, published by the NATO Maintenance and Supply Agency (NAMSA) that is currently being used by nations to facilitate the sharing of ammunition interchangeability information. I-AMMOWG also manages the color coding of NATO land forces ammunition. It assumed the work formerly done by the Naval Ammunition Interoperability Working Group (NAIWG).

15.2.6.1 Navy Representation. The U.S. Navy representation on the NAIWG consists of the following commands and offices.

a. Navy International Programs Office.

b. NAVSEA Conventional Ammunition Program Office (PM NCAS).

c. Naval Ordnance Safety and Security Activity (NOSSA).

d. Other ordnance Program Executive Officers (PEOs)/PMs participate on ordnance issues affecting their program(s).

15.2.6.2 Ordnance STANAGs. There are several STANAGs covering non-nuclear ordnance. Each STANAG has an assigned NATO Custodian and a U.S. COG Engineer. Figure 15-2-1 contains the listing of the current and presently proposed STANAGs under the cognizance of the NAIWG, or under the cognizance of another Working Party with NAIWG interest.

NUMBER	DOCUMENT TITLE	CUSTODIAN	U.S. COG
1214	20 MM Oerlikon Gun Ammunition Interchangeable Within NATO Naval Forces	PO	NAVSEA PM NCAS
1233	Procedures for RADHAZ Control in Ports and the Territorial Sea	FR	NOSSA
1239	20 MM RH 202 Gun Ammunition Interchangeable Within NATO Naval Forces	GE	NAVSEA PM NCAS
1245	40 MM/L60 Gun Ammunition Interchangeable Within NATO Naval Forces	UK	NAVSEA PM NCAS
1250	100 MM Gun Ammunition Interchangeable Within NATO Naval Forces	FR	NAVSEA PM NCAS
1283	76 MM/62 Gun Ammunition Interchangeable Within NATO Naval Forces	US	NAVSEA PM NCAS
1285	40MM L70 Gun Ammunition Interchangeable Within NATO Naval Forces	GE	NAVSEA PM NCAS
1287	5 IN/54 Gun Ammunition Interchangeable Within NATO Naval Forces	US	NAVSEA PM NCAS
1340	MK 48 MOD 4 Torpedo Interchangeable Within NATO Naval Forces	US	PEO (SUB)
1341	Harpoon Missile Interchangeable Within NATO Naval Forces	US	PMA 201
1342	MK 46 Torpedo Interchangeable Within NATO Naval Forces	US	PEO (SUB)
1343	ASROC System Interchangeable Within NATO Naval Forces	US	PMO 406
1345	130 MM (5.125 IN) Decoy Ammunition Interchangeable Within NATO Naval Forces	US	NAVSEA PM NCAS
1346	L-5 MOD 4 Torpedo Interchangeable Within NATO Naval Forces	FR	PEO (SUB)
1348	375 ASW Rocket Interchangeable Within NATO Naval Forces	FR	PMO 406
1349	STANDARD Missile Interchangeable Within NATO Naval Forces	GE	PMS 422-23
1350	100 MM Decoy System Ammunition Interchangeable Within NATO Naval Forces	UK	NAVSEA PM NCAS
1359	20 MM F2 Gun Ammunition Interchangeable Within NATO Naval Forces	FR	NAVSEA PM NCAS
1360	30 MM GOALKEEPER Gun Ammunition Interchangeable Within NATO Naval Forces	NL	NAVSEA PM NCAS
1361	57 MM L/70 Bofors Gun Ammunition Interchangeable Within NATO Naval Forces	NO	NAVSEA PM NCAS
1392	Submarine Pyrotechnics Interchangeable Within NATO Naval Forces	NL	NAVSEA PM NCAS
1393	57 MM Decoy (Barricade) Ammunition Interchangeable Within NATO Naval Forces	UK	NAVSEA PM NCAS
1394	20 MM CIWS PHALANX Gun Ammo Interchangeable Within NATO Naval Forces	US	NAVSEA PM NCAS
1402	Guidelines for the NTA Assessment of Naval Gun Ammunition Interchangeability	UK	NAVSEA PM NCAS
1405	AOP-27, Guidelines on the Interchangeability of Ammunition Within NATO Naval Forces	NL	NAVSEA PM NCAS
1417	STING RAY Torpedo Interchangeable Within NATO Naval Forces	UK	PEO (SUB)
1436	SEA SKUA Missile Interchangeable Within NATO Naval Forces	UK	Not in U.S. Arsenal
1442	(Proposed STANAG) Rolling Airframe Missile (RAM)	US	PMS 472

Figure 15-2-1. Ordnance Standardization Agreements

OPNAV M-8000.16 Volume II
30 April 2012

THE NAVAL ORDNANCE MANAGEMENT POLICY (NOMP)

VOLUME II

ORDNANCE PROGRAMS AND MAINTENANCE LEVEL RESPONSIBILITIES

DEPARTMENT OF THE NAVY
OFFICE OF THE CHIEF OF NAVAL OPERATIONS
WASHINGTON D.C.

RECORD OF CHANGES			
CHANGE NO.	DATE	TITLE OR BRIEF DESCRIPTION	ENTERED BY

TABLE OF CONTENTS

VOLUME II

Ordnance Programs and Maintenance Level Responsibilities

SECTION 1

Air Launched Missiles

Chapter	Subject	Page
1.1	Introduction	1-1-1
1.2	Organizational Level Maintenance	1-2-1
1.3	Intermediate Level Maintenance	1-3-1
1.4	Depot Level Maintenance	1-4-1

SECTION 2

Airborne Ordnance/Ammunition

Chapter	Subject	Page
2.1	Introduction	2-1-1
2.2	Organizational Level Maintenance	2-2-1
2.3	Intermediate Level Maintenance	2-3-1
2.4	Depot Level Maintenance	2-4-1

SECTION 3

Aircraft Guns and Laser Aiming Devices

Chapter	Subject	Page
3.1	Introduction	3-1-1
3.2	Organizational Level Maintenance	3-2-1
3.3	Intermediate Level Maintenance	3-3-1
3.4	Depot Level Maintenance	3-4-1

TABLE OF CONTENTS - contd.

SECTION 4

Air Launched Decoys

Chapter	Subject	Page
4.1	Introduction	4-1-1
4.2	Organizational Level Maintenance	4-2-1
4.3	Intermediate Level Maintenance	4-3-1
4.4	Depot Level Maintenance	4-4-1

SECTION 5

Targets

Chapter	Subject	Page
5.1	Introduction	5-1-1
5.2	Organizational Level Maintenance	5-2-1
5.3	Intermediate Level Maintenance	5-3-1
5.4	Depot Level Maintenance	5-4-1

SECTION 6

Weapons Handling Procedures

Chapter	Subject	Page
6.1	Introduction	6-1-1
6.2	Conventional Weapons Handling Procedures Ashore	6-2-1
6.3	Conventional Weapons Handling Procedures Afloat (LHA, LHD, and LPD)	6-3-1
6.4	Conventional Weapons Handling Procedures Afloat (AE, AO, and AOE) Combat Logistics Force Ships (Ammunition Ships)	6-4-1
6.5	Conventional Weapons Handling Procedures Afloat (CVN)	6-5-1

TABLE OF CONTENTS - contd.

SECTION 7

Aircraft Armament Equipment (AAE)

Chapter	Subject	Page
7.1	Introduction	7-1-1
7.2	Organizational Level Maintenance	7-2-1
7.3	Intermediate Level Maintenance	7-3-1
7.4	Depot Level Maintenance	7-4-1
7.5	Aircraft Armament Equipment (AAE) Planning Factors and Inventory Reporting	7-5-1

SECTION 8

Armament Weapons Support Equipment

Chapter	Subject	Page
8.1	Introduction	8-1-1
8.2	Organizational Level Maintenance	8-2-1
8.3	Intermediate Level Maintenance	8-3-1
8.4	Depot Level Maintenance	8-4-1

SECTION 9

Surface Launched Ordnance

Chapter	Subject	Page
9.1	Introduction	9-1-1
9.2	Rolling Airframe Missile (RAM)	9-2-1
9.3	Conventional Tomahawk Support Activity Site Activation and Inspection Criteria	9-3-1
9.4	Organizational Level Maintenance	9-4-1
9.5	Intermediate Level Maintenance	9-5-1
9.6	Depot Level Maintenance	9-6-1

TABLE OF CONTENTS - contd.

SECTION 10

Sub-Surfaced Launched Ordnance

Chapter	Subject	Page
10.1	Torpedoes	10-1-1

SECTION 11

Mines and Mine Systems

Chapter	Subject	Page
11.1	Current U.S. Naval Mine Inventory	11-1-1
11.2	SEAFOX	11-2-1
11.3	Rapid Airborne Mine Clearance System (RAMICS)	11-3-1

SECTION 1

Air Launched Missiles

Table of Contents

Chapter	Subject	Page
1.1	Introduction	1-1-1
1.2	Organizational Level Maintenance	1-2-1
1.3	Intermediate Level Maintenance	1-3-1
1.4	Depot Level Maintenance	1-4-1

CHAPTER 1.1

Introduction

Table of Contents

Paragraph	Subject	Page
1.1.1	General	1-1-1
1.1.2	Responsibilities	1-1-1
1.1.3	Applicability	1-1-1
1.1.4	Maintenance Philosophy	1-1-8
1.1.5	Missile Inventory Management (MIM)	1-1-8
1.1.6	Asset Readiness Objective	1-1-9
1.1.7	All-Up-Round (AUR) Missile	1-1-9
1.1.8	All-Up-Round Maintenance Concept	1-1-9
1.1.9	All-Up-Round Test Concept	1-1-9
1.1.10	Deep Stowage Concept	1-1-10
1.1.11	Missile Sentencing Inspection	1-1-10
1.1.12	All-Up-Round Pipeline	1-1-11
1.1.13	Assignment of Maintenance Levels and Responsibilities	1-1-13
1.1.14	Missile Logbooks	1-1-13

List of Illustrations

Figure	Title	Page
1-1-1	Missile Model Matrix	1-1-2
1-1-2	All-Up-Round Pipeline	1-1-12

List of Illustrations - contd.

Figure	Title	Page
1-1-3	Air Launched Missile Maintenance Levels and Actions	1-1-14
1-1-4	Assigned Level of Maintenance for SPARROW	1-1-15
1-1-5	Assigned Level of Maintenance for AMRAAM	1-1-15
1-1-6	Assigned Level of Maintenance for SIDEWINDER	1-1-16
1-1-7	Assigned Level of Maintenance for HARM/AARGM	1-1-17
1-1-8	Assigned Level of Maintenance for MAVERICK	1-1-17
1-1-9	Assigned Level of Maintenance for HARPOON	1-1-18
1-1-10	Assigned Level of Maintenance for SLAM-ER	1-1-19
1-1-11	Assigned Level of Maintenance for HELLFIRE	1-1-19
1-1-12	Assigned Level of Maintenance for TOW	1-1-20
1-1-13	Assigned Level of Maintenance for JSOW	1-1-20
1-1-14	Assigned Level of Maintenance for RAM	1-1-20

CHAPTER 1.1

Introduction

1.1.1 General. This chapter addresses maintenance program management of air launched missiles. During a weapon system's deployment life cycle phase, maintenance program management is a critical management function due to the impact of maintenance requirements on the effective use of personnel, materials, facilities, and fiscal resources. Maintenance program management functions include maintenance planning, coordinating, budgeting, and evaluating program process. Air launched missiles are under the technical cognizance of the Commander, Naval Air Systems Command (COMNAVAIRSYSCOM). Inventory management responsibilities are assigned to the Naval Supply Systems Command Global Logistics Support (NAVSUP GLS AMMO). Throughout this section, the term "air launched missiles" will include those designated air missiles capable of being launched from surface and subsurface platforms as indicated in Figure 1-1-1.

1.1.2 Responsibilities.

1.1.2.1 The Logistics Management Division is responsible for the program management and funding of weapons maintenance programs. COMNAVAIRSYSCOM and Commander, Naval Sea Systems Command (COMNAVSEASYSCOM) are responsible for management, integrated logistics support, and maintenance engineering functions pertinent to weapon systems under their cognizance.

1.1.2.2 Assistant Program Managers, Logistics (APML) within COMNAVAIRSYSCOM plan and implement integrated logistics support and project support management activities for major weapon systems. APMLs are directly responsible to COMNAVAIRSYSCOM Weapon System Program Managers (Air) for logistics aspects of acquisition programs from inception through deployment and eventual phase-out from the active inventory. The APMLs are directly responsible to the Director for the effective planning and development of operation effectiveness and cost-effective support systems for acquisition programs.

1.1.2.3 Volume II, Chapters 1.2 through 1.4 describe the Organizational, Intermediate, and Depot level maintenance actions that apply to air launched missiles.

1.1.3 Applicability. Paragraphs 1.1.3.1 through 1.1.3.12 provide air launched missile system descriptions. Figure 1-1-1 provides a missile model matrix defining employment.

1.1.3.1 SPARROW. The SPARROW is a medium-range, all-weather, supersonic, air-to-air guided missile. The RIM-7M guidance and control section is common with the AIM-7M. When used in the surface launched RIM configuration, folding wings, clipped fins, and a remotely armable rocket motor are used. The AIM/RIM-7M utilizes a Missile-Borne Computer (MBC), an active fuze system, motorized seeker head tracking, and improved maintainability and produceability. The AIM/RIM-7P missile has undergone two block modifications. The AIM/RIM-7P Block I provides low altitude guidance and fuzing capability. The AIM/RIM-7P Block II provides increased memory and throughput to the MBC, enhanced production software reprogrammable capability, and mid-course uplink improvements to the rear receiver. The AIM/RIM-7 series is a semiactive, air-to-air, boost-glide missile,

MISSILE/ WEAPON	AIR-TO-AIR AIM	AIR-TO-SURFACE AGM	SURFACE-TO-AIR RIM	SURFACE-TO-SURFACE RGM	SUB-SURFACE-TO-SURFACE UGM
SPARROW AIM-7	AIM-7M/P		RIM-7M/P		
AMRAAM AIM-120	AIM-120A AIM-120B AIM-120C AIM-120C-4 AIM-120C-5 AIM-120C-6 AIM-120C-7				
SIDEWINDER AIM-9	AIM-9M-1 AIM-9M-4 AIM-9M-6 AIM-9M-8 AIM-9M-10 AIM-9X				
HARM AGM-88		AGM-88B AGM-88C			
AARGM AGM-88		AGM-88E			
MAVERICK AGM-65		AGM-65E AGM-65F			
JSOW AGM-154		AGM-154A AGM-154C AGM-154C-1			
HARPOON AGM-84		AGM-84D-1		RGM-84D-2, 4, 5	UGM-84D-1
SLAM-ER AGM-84H-1 AGM-84K-1		AGM-84H-1 AGM-84K-1			
HELLFIRE AGM-114		AGM-114B AGM-114K AGM-114K-2 AGM-114M AGM-114N			
TOW BGM-71		BGM-71		BGM-71	
RAM RIM-116			RIM-116		

Figure 1-1-1. Missile Model Matrix

designed to be either rail or ejection launched. Semiactive, continuous wave, homing radar and hydraulically-operated control surfaces direct and stabilize the missile on a proportional navigational course to the target. Propulsion for the missile is provided by a solid propellant rocket motor. SPARROW is capable of being launched by all U.S. Navy fighter aircraft and provides ship defense against enemy aircraft and cruise missiles when employed as a Basic Point Defense Surface Missile System. Missile-to-aircraft electrical and mechanical interface is provided by the launchers listed as follows for the applicable aircraft:

F-15	(LAU-106 ejection)	F/A-18	(LAU-115 rail)
F-16	(LAU-106 ejection)	F/A-18	(LAU-116 ejection)

1.1.3.2 AMRAAM. The AIM-120 Advanced Medium Range Air-to-Air Missile (AMRAAM) is an all-weather, radar guided, missile designed as the next generation, medium range air-to-air missile replacing the AIM-7 SPARROW. AMRAAM was developed to significantly improve operational capabilities and reliability while reducing operational cost. AMRAAM is delivered and supported as an All-Up-Round (AUR), requiring only the installation of a buffer connector and flight control surfaces in the Fleet. The missile is 144 inches long and 7 inches in diameter. The AIM-120A/B/C/C-4 weighs 348 pounds and the AIM-120C-5/C-6/C-7 weighs 356 pounds. The wing span for AIM-120A and B models is 25 inches and was reduced to 19 inches for the AIM-120C to accommodate internal carriage on the F-22 aircraft. Three series of the AMRAAM are currently in the Navy inventory: the AIM-120A baseline version, the AIM-120B that added software reprogramming capability, and the AIM-120C, which features smaller flight control surfaces. A block number included in the missile Type Model Series (TMS) designator identifies hardware improvements to the AIM-120C. All Navy inventory AMRAAM missiles are equipped with a Thermally Initiated Venting System (TIVS) to meet Navy Insensitive Munitions (IM) requirements aboard ship. The TIVS is contained within the missile wiring harness that also includes an indicator showing whether the system is either enabled or disabled. AMRAAM does not require external arming or dearming. An indicator for the rocket motor arm-fire device is provided. The AMRAAM missile system has been integrated with all versions of the Navy F/A-18, the USMC AV-8B and Air Force F-15 and F-16 aircraft. The AV-8B is only authorized to carry the AIM-120A and B. Missile launchers applicable to the AMRAAM with F/A-18 are the LAU-127 (rail) (the LAU-127 is capable of carrying and launching the AIM-9M/X SIDEWINDER missile) and LAU-116 (eject). The AV-8B utilizes the LAU-127 launcher. Missile testing on the aircraft is accomplished by initiating the missile Built-In-Test (BIT) capability. Warhead replacement telemetry units are used to convert tactical versions of the AMRAAM for test and Fleet firings. These missile configurations are identified as JAIM-120A/B/C missiles. AMRAAM is shipped and stored in a reusable container that can accommodate from one to four missiles with buffer connectors and flight control surfaces.

1.1.3.3 SIDEWINDER. The AIM-9 SIDEWINDER series was developed as a short-range, supersonic, air-to-air missile. It employs a passive infrared target acquisition system, proportional navigational guidance, a torque-balance control system, and a target detector. The missile is propelled by a solid propellant rocket motor. The development process has produced increased capabilities with each missile modification. The AIM-9M missile utilizes a guidance control section with counter-countermeasures and improved maintainability and producibility. The AIM-9X missile is the most recent configuration and consists of four external sections: a Guidance Unit (GU), a Target Detector (TD) fuze, a Annular Blast Fragmentation (ABF) warhead controlled by an Electronic Safe/Arm Device (ESAD), and a Propulsion/Steering Section (PSS). The PSS contains either a MK 139

Mod 0 rocket motor (modified MK 36 Mod 11 rocket motor) or a MK 139 Mod 1 (manufactured specifically for AIM-9X considerations), which contains a manual SAFE-ARM selector handle, the Fin Actuator Unit (FAU), the Jet Vane Control (JVC), and the Control Actuation System (CAS) electronics. The AIM-9X four forward mounted fixed wings provide aerodynamic lift and stability. Aerodynamic control is provided by four control fins directly coupled to four jet vanes mounted in line with the fixed wings. Thrust from the rocket motor passes through the JVC and is deflected according to fin/jet vane position. The AIM-9X, when operating in the digital mode, interfaces with the aircraft via the legacy AIM-9M forward umbilical and the AMRAAM mid-body umbilical (LAU-127 launcher). The AIM-9X also supports the legacy AIM-9M aircraft to missile analog interface. To operate the AIM-9X in analog mode, only the legacy AIM-9M umbilical is utilized, the launcher mid-body umbilical is not installed. The AIM-9X missile has three basic phases of operation: captive flight, launch, and free flight. The AIM-9X SIDEWINDER missile provides a capability for day/night engagements and improved performance against highly maneuverable targets in an Infrared (IR) countermeasures environment. The following are the significant differences between the AIM-9X and AIM-9M:

a. Increased maximum range and increased maneuverability is provided by a modified low drag airframe, fixed forward wings and a combined vectored thrust/tail fin control system.

b. Increased acquisition ranges and off-bore-sight acquisitions are provided by a new GU incorporating an imaging Focal Plane Array (FPA) IR sensor with improved Infrared Countermeasures (IRCM) capability.

c. Unlimited seeker cooling is provided by an internal cryoengine that replaces the AIM-9M cryogenic gas bottle system.

d. Enhanced aircraft/missiles communication via the (AIM-120) mid-body MIL-STD-1553B data interface.

e. Improved warhead arming with a new ESAD.

f. Field reprogramming of the missile's GU software provides the capability to rapidly enhance missile capabilities in response to changing threat IRCM capabilities. AIM-9X is BIT capable on the aircraft or while off the aircraft, the missile can be tested or reprogrammed using a Common Munitions BIT Reprogramming Equipment (CMBRE), AN/GYQ-79 or AN/GYQ-79A and an AIM-9X peculiar Test Program Set (TPS), TTU-574/E24A or ADU-891/(V)1/E interface.

g. AIM-9X Lots 1-7 have a 2000 hour/10 year warranty through the prime contractor, Raytheon Company, who is responsible for all depot functions. For F/A-18 series aircraft; Tactical missile reaching 2600 hour intervals will be returned to Depot for inspection and replacement of warhead. AIM-9X will also be required to be returned to Depot at 5000 hour intervals for inspection and replacement of critical hardware components for all A/C platform utilization. The CATM-9X missile has a 10 (ten) year shelf life in the container. CATM-9X missile should be managed by rotating assets between in service, ready storage, and deep storage so the provisions of the warranty can be maximized. CATM-9X shall be returned to Depot at 5000 hour intervals for inspection and replacement of critical hardware components for all A/C platform utilization. For the U.S. Navy, AIM-9X uses a modified LAU-7 launcher (LAU-7D/A, E/A and F/A) for F/A-18 A/B/C/D aircraft on stations 1 and 9 (wing-tips). When employed on the F/A-18E/F aircraft, the LAU-127 series launcher will be used on aircraft stations 1 and 11.

h. The AIM-9M/X is configured with an ABF warhead. The guided missile launcher LAU-7A series is a reusable single rail launcher which provides the mechanical and electrical interface between the

missile and the launch aircraft. It houses the nitrogen receiver assembly used to cool the missile guidance system's infrared detector.

1.1.3.4 HARM. The AGM-88B/C High Speed Anti-Radiation Missile (HARM) is an evolution of past anti-radiation missile weapon systems: SHRIKE and STANDARD ARM. HARM incorporates the more desirable features of each while providing additional capabilities that enhance operational effectiveness. The system consists of the guided missile, LAU-118(V)1/A launcher, launch aircraft, and HARM peculiar avionics. The weapon system has the capability of detecting, acquiring, displaying, and selecting a radiating threat and launching a missile or missiles. The HARM missile has a terminal homing capability that provides a launch and leave capability for the launch aircraft. The HARM AGM-88 is a supersonic, air-to-ground, rail-launched guided missile. Guidance is provided through reception of signals emitted from a ground-based threat radar. It has the capability of discriminating a single target from a number of emitters in the environment. The C version has an improved guidance section which incorporates improved tactical software and an electronically reprogrammable memory. The missile has four major sections: guidance, control, warhead, and rocket motor, which can separate at section joints to facilitate maintenance. The Navy LAU-118(V)1/A launcher provides the mechanical and electrical interface between the missile and aircraft. It is a single rail launcher modified from the AERO-5B-1 series. A unique mechanical configuration prohibits installation of the HARM missile on an unmodified AERO-5 launcher. The Navy LAU-118(V) 1/A is electrically different than the Air Force LAU-118 (V)2/A launcher and is not interchangeable.

1.1.3.5 AARGM. The AGM-88E Weapon system is an evolution of the HARM Weapon System and consists of the AGM-88E missile, and associated training and utilizes the existing HARM support equipment. The F/A-18C/D is the initial integration platform for the AGM-88E during System Development and Design (SD&D) and utilizes the LAU-118 (V)1/A launcher. Objective aircraft (F/A-18E/F, EA-6B, EA-18G, F-16 and external carriage on the Joint Strike Fighter (JSF) and Tornado Electronic Combat and Reconnaissance (ECR)) may be integrated after SD&D and tested during Follow-on Test and Evaluation (FOT&E) periods. The AGM-88E is a supersonic, advanced anti-radiation, air-to-ground rail launched guided missile. The AGM-88E will consist of a newly developed guidance section, a modified AGM-88B/C HARM control section and existing AGM-88B/C HARM rocket motor section, warhead section wings and fins. The guidance section provides the basic guidance and controls functions for the AGM-88E and can provide pre-launch target location information to the avionics subsystem. Using a set of programmable target parameters, the guidance section can separate and track a single target or target type from a number of radar emitters in a high-density environment. This tracking information is provided as a primary input to the control section for missile guidance. The designation of alternate targets and control of guidance modes are determined by tactical missile software. The guidance section will also provide a means for off-board targeting via the IBS-R.

1.1.3.6 MAVERICK. The AGM-65 series MAVERICK is an air-to-surface, rocket propelled, guided missile that can be configured with either a laser or infrared seeker. The MAVERICK weapon system consists of the MAVERICK guided missile with a laser or infrared seeker, LAU-117/A(V)2/A launcher, and a launch aircraft with MAVERICK-peculiar avionics incorporated. The weapon system was designed primarily for the destruction of hard point targets such as tanks and bunkers. It employs the capability for day or night operations, sufficient standoff range to permit avoidance of enemy defenses, and terminal homing guidance for a launch-and-leave capability. The AGM-65F employs an infrared seeker and the AGM-65E uses a laser seeker. The infrared and laser seeker sections can be interchanged

with no other alterations to the missile. The Navy AGM-65E/F differs from previous Air Force MAVERICK missiles by incorporating a heavier warhead, a dual thrust rocket motor, and an infrared or laser seeker. The LAU-117/A(V)2/A is a single rail-guided missile launcher developed for the MAVERICK system. It provides the mechanical and electronic interface between the missile and launch aircraft. The launcher utilizes a mechanical restraint device that was developed to meet both the Navy and Air Force requirements. It provides increased capability over previous MAVERICK launchers by incorporating seeker slaving circuitry which enhances MAVERICK's target acquisition capability.

1.1.3.7 HARPOON. The HARPOON is an all-weather, antiship, subsonic, surface attack guided missile that can be delivered from an aircraft (AGM-84), surface vessel (RGM-84), or submarine (UGM-84). The various launch configurations are obtained with the installation of the applicable launch kits, booster section, canister, or capsule. All configurations are capable of over-the-horizon launch ranges and have built-in self-test capability. HARPOON employs a low-level cruise profile, active radar guidance with counter-countermeasures, and terminal maneuvering to assure maximum weapon effectiveness. It consists of four major sections: guidance, warhead, sustainer, and control sections. A booster section is added to the aft end of the missile for surface and subsurface launches. The warhead section is replaced with an exercise section for evaluation and training exercises. An appropriately configured HARPOON can be launched from a BRU-32/A, BRU-15/A, or MAU-12 bomb rack; MK 141 Mod 1 (Canister) launcher; or from a submarine torpedo tube.

1.1.3.8 SLAM-ER. The AGM-84K-1 SLAM-ER is an air-to-surface missile adapting the baseline SLAM to accommodate adaptive terrain following capability, extended standoff range, improved warhead penetration and flexible mission planning. SLAM-ER is an air launched missile designed for use on the F/A-18 aircraft. The SLAM-ER incorporates planar wings to provide increased range, improved survivability, and a higher operating envelope. The warhead section combines the new warhead assembly designed for increased hard target penetration. The SLAM-ER incorporates a multi-channel Global Positioning System (GPS) to complement the Inertial Navigation System (INS) in providing a high degree of accuracy against hardened high value surface targets. The AGM-84K SLAM-ER is a missile system upgrade that incorporates automatic target acquisition capabilities into the missile guidance system.

1.1.3.9 HELLFIRE. The AGM-114B HELLFIRE missile is an antiarmor, laser guided, air-to-ground weapon which uses a shaped charge warhead to defeat hard point targets with minimal exposure of the launch helicopter to enemy fire. Guidance is provided through automatic terminal homing on laser signals reflected from a laser designated target. The HELLFIRE weapon system consists of an AGM-114B basic, AGM-114K, AGM-114K-2, AGM-114M, and AGM-114N HELLFIRE II missiles. M272 launcher (used on AH-1W helicopter), M299 launcher (used on the SH/UH/HH-60 helicopters), HELLFIRE-peculiar avionics, and a laser target designator. Laser target designators can be hand-held or tripod-mounted by ground observers or aircraft mounted units Night Targeting System (NTS) used on AH-1W; Forward Looking Infrared (FLIR) System used on SH/UH/HH-60). The missile consists of four major sections: seeker, guidance warhead, propulsion, and control. The only difference between the Army and Navy basic HELLFIRE versions is that the Navy version has a safe and arm device in the propulsion section. There is no difference between the Army and Navy AGM-114K HELLFIRE versions. The safe and arm device, which has an out-of-line igniter, provides the additional safety required for shipboard use. The M272 and M299 guided missile launchers were developed specifically for the HELLFIRE missile and provide the electronic and mechanical interface between the missile and helicopter. The launcher is capable of carrying one to four missiles on each launcher. The M272 and

M299 launcher will only be carried on the outboard stations of the stub wing on the AH-1W aircraft. The M299 launcher will be carried on the left-hand extended pylon on the H-60 series aircraft. The length, weight, and physical characteristics of the HELLFIRE II missile are the same as the basic missile allowing full compatibility with launch platforms, shipping containers and support systems currently in place.

1.1.3.10 TOW. The BGM-71 TOW is a solid propellant guided missile. It is tube launched, optically tracked, and wire guided. The TOW weapon system was developed to provide the capability of destroying enemy armor and other hard point targets. Adding TOWs lethality to the mobility of a helicopter launch platform significantly improved the weapon's effectiveness. The weapon system consists of the AH-1W helicopter, M65 avionics, TOW missile launcher, and the BGM-71 series guided missiles. The all-up-round missile is enclosed in a launch container until it is launched. The launch container has removable forward and aft end protective caps that provide an airtight environment during stowage. The launch container provides protection for the missile during handling and stowage and also serves as an integral part of the TOW missile launcher. The TOW missile launcher provides the electrical and mechanical interface between the missile and launch helicopter. Each TOW launcher holds two TOW missiles. The helicopter is capable of holding four TOW missile launchers on outboard stations for a maximum of eight missiles. A radio frequency shield (MSU-710/A) is installed in each TOW missile launcher tube prior to loading a missile to the igniter circuits. Radio frequency shield is not required for TOW2A and TOW2B missiles since they are Radiation Hazard (RADHAZ) safe.

1.1.3.11 JSOW. The Joint Stand Off Weapon (JSOW) is a family of low-cost, air-to-ground weapons which employ a GPS aided inertial guidance system and a kinematically efficient airframe. The JSOW has an inherent range capability for the Navy, Air Force, and Marine Corps, that satisfy the stand-off requirements for attacking interdiction targets from outside enemy point defenses during day, night and adverse weather conditions. JSOW is intended for use on a wide range of aircraft, including the F-18C/D utilizing the BRU-32A/A on stations 2, 3, 7, and 8, and the F-18E/F on stations 3, 4, 8 and 9. There are currently three configurations of the JSOW vehicle: AGM-154A, AGM-154C and AGM-154C-1. All weapon variants are inexpensive, unpowered, and survivable. For payload delivery, they are carried aloft by a host of aircraft and launched to the target area from a Stand-off Outside Point Defense (SOPD). The AGM-154C variant incorporates an autonomous targeting acquisitions system and a multi-warhead payload for hard target penetration and blast fragmentation. The AGM-154C-1 will provide all the capability of the AGM-154C plus moving maritime target capability to the fleet using a Strike Common Weapon Data Link-16 (SCWDL). The F/A-18 will be capable of passing in-flight target updates (Lat, Long, El, track quality, velocity, GPS time, track number, other sepcor) using Network Enabled Weapons (NEW) J-series message over MIDS-LVT/MIDS-JTRS radio (MIDS JTRS card targeted for WDLN) to the JSOW weapon. This new capability will support both self-launched weapons, and weapons launched by others utilizing appropriate handoff controls.

1.1.3.12 RAM. The RIM-116 Rolling Airframe Missile (RAM) is a surface launched, lightweight quick-reaction, fire and forget missile designed to destroy anti-ship missiles and asymmetric air and surface threats. Currently there are two RIM-116 configurations: Block 0 (RIM-116A) and Block 1 (RIM-116B). The Block 0 design is based on the infrared seeker of the Stinger missile, and the warhead, rocket motor, and fuse from the Sidewinder (AIM-9M) missile. The Block 0 configuration uses Radio Frequency (RF) for midcourse guidance and transitions to IR guidance for terminal engagement. There is no shipboard support required (i.e. no illuminators) after missile launch. While retaining Block 0 guidance modes, Block 1 incorporates the added capability of autonomous IR-all-the-way guidance,

thus countering advanced anti-ship missiles that do not employ onboard radar seekers. The missile's inherent seeker design and performance characteristics enable engagement of helicopters, aircraft and surface threats.

1.1.4 Maintenance Philosophy. The air launched missile maintenance philosophy is based on the all-up-round maintenance concept and utilizes the three-tiered maintenance structure described in Volume II, Chapter 1.2 through 1.4. Maintenance processes are designed to achieve each individual air launched missile system's asset readiness objective established by the Chief of Naval Operations (CNO). The objective of the processes is to achieve and maintain established asset readiness objectives with the optimum use of manpower, material, and fiscal resources.

1.1.5 Missile Inventory Management (MIM). The MIM for maintenance purposes is segregated and managed as three categories: Operational Stocks (OS), Stored Ashore Stocks (SAS) and Contingency Retention Stocks (CRS).

1.1.5.1 Operational Stocks. OS is afloat ship ordnance loads plus Non-Combat Expenditure Allowance (NCEA). Afloat ship ordnance is the quantity of stocks aboard deployed and Maritime Prepositioning Force (MPF) ships reported in Ordnance Information System (OIS), plus 2 additional Carrier Battle Group/Amphibious Ready Group (CVBG/ARG) loads to compensate for downloaded ships. NCEA quantities are authorized by CNO (N411).

1.1.5.1.1 OS Replenishment. Attrition from OS due to NCEA expenditures and other losses will be filled by the NAVSUP GLS AMMO inventory manager in the following decision sequence: (1) new production assets or, (2) CRS or (3) SAS as required.

1.1.5.2 Stored Ashore Stocks. SAS is Non-Nuclear Ordnance Requirements (NNOR) minus OS (SAS = NNOR - OS). SAS maintenance requirements will be determined by the Ordnance Assessment (OA) program and approved by Program Managers and CNO (N411).

1.1.5.2.1 SAS Sentencing. Weapons with expired Serviceable In Service Time (SIST) that have been stored in a magazine ashore and show no signs of deterioration may be sentenced to the appropriate Ready For Issue (RFI) condition code and placed in SAS. There is no requirement for testing of these missiles prior to transfer to SAS. Assets that have been captive flown since their last maintenance cycle, exhibit visible deterioration, or are in containers that are unsealed are not transferable to SAS. These weapons should remain in OS until expiration of the Maintenance Due Date (MDD), at which time they should be downgraded and retrograded to a designated repair site for inspection and test.

1.1.5.2.2 SAS Sampling Plans. All weapons systems will be monitored through periodic sampling. Samples will be selected from SAS and included in the overall stockpile reliability evaluation. The sample sizes and responsibilities will be addressed in the Stockpile Reliability Program (SRP) for each system.

1.1.5.3 Contingency Retention Stocks. CRS is defined as in-bin inventory minus the NNOR. When in-bin inventory exceeds NNOR, no funds will be provided to maintain CRS assets. CRS category provides visibility and accounting of assets until future disposition actions have been completed. Generally, these assets are set aside by the Program Manager (PM)/APML and reviewed for OS replenishment, cross leveling, foreign military sales, expenditure, DEMIL and disposal.

1.1.5.4 Inventory Administration. NAVSUP P-724 provides administrative procedures for inventory reporting.

1.1.5.5 Modification/Modernization.

1.1.5.5.1 Operational Stock. Technical directive implementation to accomplish modification and modernization, with the exception of safety-related issues, will normally be accomplished as OS are returned for scheduled maintenance or as directed by the program office.

1.1.5.5.2 SAS. Since scheduled maintenance cycles may not apply to assets in SAS, funding and forecasting of Engineering Change Proposals (ECPs) and technical directive compliance must be addressed by COMNAVAIRSYSCOM during ECP, technical directive development and review processes.

1.1.5.6 New Production/Warranties. New production missiles will be placed into OS. When the missile systems reach the OS target level, older assets that are out of warranty, or near warranty expiration, will be transferred to SAS.

1.1.6 Asset Readiness Objective. The Chief of Naval Operations establishes an asset readiness objective for each air launched missile system based on the NNOR model, developed in accordance with OPNAVINST 8011.9A. The asset readiness objective, Fleet operational requirements and ship fill requirements are the goals to be achieved and maintained by the Naval Ordnance Management Policy (NOMP). Asset readiness is expressed as the ratio (in percentage) of serviceable assets, not in the maintenance pipeline, to the total number of assets in the inventory. The CNO monitors asset readiness, and mission readiness for each individual system.

1.1.7 All-Up-Round Missile. An AUR missile is defined as either:

a. A missile which is provided to the Fleet as a complete assembly in its end item configuration; or,

b. A missile which is provided as a complete assembly in its end item configuration, but which requires wing and/or fin installation by the user due to container constraints.

1.1.8 All-Up-Round Maintenance Concept. The AUR missile maintenance concept is a maintenance methodology designed to accommodate the processing of AUR missiles throughout the logistics cycle. The objectives of the AUR maintenance concept are:

a. To issue fully assembled missiles to the Fleet which require minimal checkout or test.

b. To effect improvements in weapons handling and storage throughout the logistics sequence.

c. To effect major decreases in weapon strikedown and strikeup operational times.

d. To improve rearming rates.

1.1.9 All-Up-Round Test Concept. The AUR missile test concept is a maintenance methodology designed to assess specific operational parameters of the AUR missile as the final maintenance action, performed in the configuration which will be forwarded to the user. The AUR test is intended to verify compliance with test specification parameters and provide an acceptable degree of assurance that only weapons with a high probability of success are issued to the operating forces.

1.1.9.1 Proximity Test. Proximity testing is defined as the maintenance testing of an assembled AUR weapon, or its individual components, without the requirement or necessity for personnel to use protective enclosures as physical protection from explosive hazards.

1.1.9.2 Safety approval for proximity testing is issued by the Weapon System Explosive Safety Review Board (WSESRB), in accordance with NAVSEAINST 8020.6. Safety approval for proximity testing is granted by the WSESRB for individual commodities and equipment configurations at specified locations.

1.1.9.3 Proximity testing is approved for the following systems:

HARM	(AGM-88)	AN/DSM-160/AN/GSM-396A
AARGM	(AGM-88E)	AN/GYQ-79 CMBRE+
AMRAAM	(AIM-120)	AN/GYQ-75A(V)2 or AN/GYQ-79 + ADU-891(V)1/E
MAVERICK	(AGM-65)	TTU-519E
JSOW	(AGM-154)	CMBRE
SIDEWINDER	(AIM-9X)	AN/GYQ-79 or AN/GYQ-79A + TTU-574/E24A or ADU-891(V)1/E

1.1.9.3.1 Implementation of proximity testing is contingent upon the update of pertinent technical manuals and industrial processing guides to reflect (1) that the missile is approved for proximity testing and (2) proximity testing procedures for the specific models of the missile and its test set are incorporated.

1.1.10 Deep Stowage Concept. Deep stowage is a means of protecting the AUR missile. The objective of deep stowage is to maintain assets in their highest state of readiness until needed to support operational requirements. Deep stowage describes assets when they are stored in a protected environment. Assets stored under such conditions normally remain in their shipping containers with weapon station seals intact. Deep stowed assets are protected from degradation caused by day-to-day exposure to the environment, thereby providing the highest confidence level that they will accomplish their intended mission. In order to meet the highest confidence level, a missile must meet the following criteria:

a. Deep stowed in an undamaged container with one or more traceable seals intact.

b. No restriction Notice of Ammunition Reclassification (NAR) on use of missiles or components.

c. Missile is within serviceable period.

d. Serial numbers on Code A, Material Condition tag/label match the serial numbers on the containers.

1.1.10.1 Deep Stowage (Afloat). Assets are classified as deep stowed for as long as they:

a. Remain in their shipping containers and are stored below deck in magazine spaces which are in accordance with NAVSEA OP 4 (Ammunition Afloat).

b. Have been removed from their shipping containers and stored in ready service magazines below deck until they are required for the strike up, but have not been loaded on an aircraft.

1.1.10.2 Deep Stowage (Ashore). Assets are classified as deep stowed for as long as they remain in their shipping containers and are stored in a protected environment in magazines which are in accordance with NAVSEA OP 5 Volume I and NAVSEA SW020-AC-SAF-010.

1.1.11 Missile Sentencing Inspection. A missile sentencing inspection is a visual external examination (screening) of complete missile rounds and components offloaded from a ship or otherwise returned to a NAWMU or NWS/Navy Munitions Command (NMC) Detachment. A missile sentencing inspection can be performed in operating buildings, segregation facilities, waterfront piers, or in any approved inspection area permitted by NAVSEA OP 5, Volume I and NAVSEA SW020-AC-SAF-010.

Missile sentencing inspection procedures have been developed for each individual missile series and are contained in NAVSUP P-805/807.

1.1.12 All-Up-Round Pipeline. Figure 1-1-2 is a simplified block diagram that depicts the flow of AUR missiles and related missile sections from acquisition through final expenditure. A brief discussion of the pipeline follows:

1.1.12.1 Procurement.

1.1.12.1.1 General. Procurement is under the management control and policy guidance of the PMs, and is the product of the planning, programming and budgeting cycle, and the requirements determination process.

1.1.12.2 All-up-round missiles issued to the Fleet remain under Fleet Commander cognizance until expenditure, the MDD is due, SIST expires, service life expires, or malfunction occurs. With the exception of those AUR missiles that are required to satisfy operational requirements, the AUR missiles normally remain containerized and are placed in deep stowage. Through the use of missile presentencing inspections, missiles meeting ready for issue criteria will remain available for redeployment or shipped to storage awaiting issue.

1.1.12.3 When a Fleet-issued AUR missile becomes Non Ready-For-Issue (NRFI) because the MDD is due, service life expires, or malfunction occurs, it is returned to a maintenance facility for repair or recertification. Missiles that are Organizational to Depot level maintenance are shipped directly to the respective depot. For other missiles, in the Pacific Fleet, the AUR missile can be turned in to a Naval Magazine (NAVMAG), Commander, Fleet Activity, Marine Corps Air Station (MCAS), or Naval Air Facility (NAF) for shipment to NAVMAG Pearl Harbor, Hawaii, or Naval Activities (NAVACTS) Guam for further transfer to Naval Airborne Weapons Maintenance Unit One (NAWMU-1) or NWS for repair and recertification. If the required repair actions are beyond the capability of NAWMU-1, the AUR missile is returned to a west coast NWS. In the Pacific Fleet, the AUR missile may also be returned directly from the Fleet unit to a continental United States NWS. In the Atlantic Fleet, all NRFI AUR missiles are returned directly to a continental United States NWS. All missile transactions and status changes are reported and tracked through OIS.

1.1.12.4 All-Up-Round missiles returned to a maintenance facility are inspected, tested, and repaired in accordance with the applicable approved procedures. Repaired and recertified AUR missiles are again ready for Fleet issue. All-Up-Round missiles which fail testing at a NAWMU or NWS are disassembled (except those under warranty) and the faulty sections and components are transferred to a designated overhaul point for repair. Depot repaired AUR missiles are shipped directly from the vendor to a storage point where they are entered into the Naval Supply System (NSS) and are RFI for the Fleet. Depot repaired sections or components are returned to a NAWMU or NWS where they will be available for missile maintenance. Prior to shipment to the designated overhaul point, selected guidance and control sections may be sent to weapons quality engineering for failure verification prior to shipment to the designated overhaul points, rocket motors are inspected and screened to reduce the number of rocket motors in the rework pipeline. All-up-round missiles and air launched missile sections and components continue to be tracked in OIS throughout the process. Any changes in their configuration or status are reported via transaction item reporting and Ammunition Transaction Reports (ATRs).

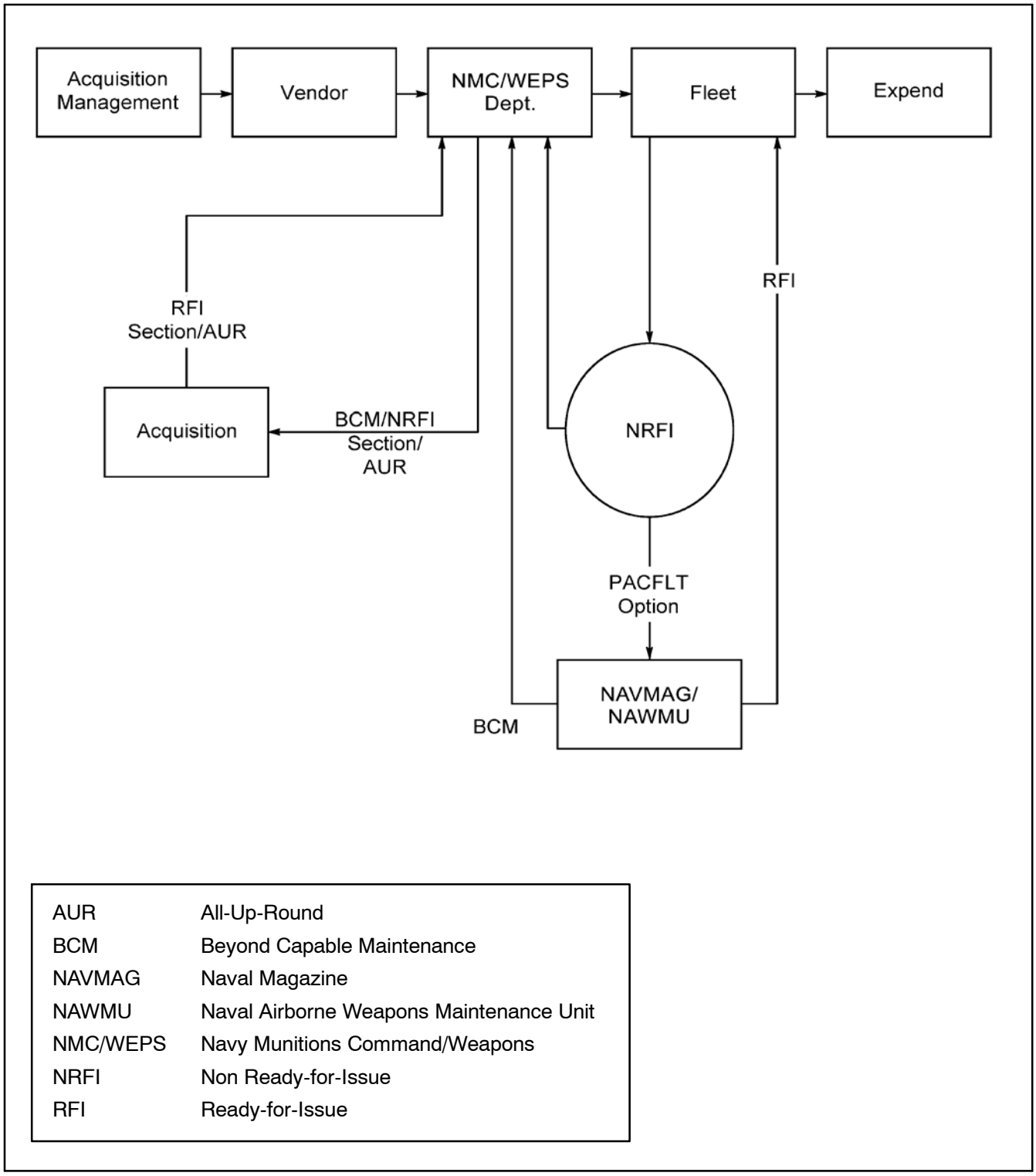

AUR	All-Up-Round
BCM	Beyond Capable Maintenance
NAVMAG	Naval Magazine
NAWMU	Naval Airborne Weapons Maintenance Unit
NMC/WEPS	Navy Munitions Command/Weapons
NRFI	Non Ready-for-Issue
RFI	Ready-for-Issue

Figure 1-1-2. All-Up-Round Pipeline

1.1.12.5 Designated overhaul points for missile sections or components may either be weapons support facilities, Army or Air Force Depots, or commercial contractor. Designated overhaul points perform repair and refurbishment actions beyond the capability of a NAWMU or other Intermediate Maintenance Activities (IMAs). Section status reporting to OIS for depot activities is accomplished via transaction item reporting and ATRs.

1.1.13 Assignment of Maintenance Levels and Responsibilities. Figure 1-1-3 provides an overview of air launched missile maintenance actions and the maintenance level to which they are normally assigned. Figures 1-1-4 through 1-1-14 assign maintenance responsibilities prescribed in Volume I, Chapter 2.3 for air launched missiles. Maintenance action, peculiar record keeping and reporting requirements are inherently included in these assignments. Selected higher level maintenance actions may be performed at designated lower level maintenance levels when authorized.

1.1.14 Missile Logbooks.

1.1.14.1 Logbooks and records are an integral part of air launched missile maintenance. Logbooks accompany each air launched missile and major section and are the administrative means of providing managers with air launched missile age, status, operational history, movement, modification, configuration, and transfer and receipt accounting data. Properly maintained logbooks document each individual missile's operational history, movement, modification, and maintenance actions throughout its life cycle. Missile logbooks serve as the baseline document for this purpose. With the Airborne Weapon Analysis and Reporting System (AWARS) the Serialized Lot Item Tracking System (SLITS) a subsystem of the OIS system at the NAVSUP GLS AMMO requires MK, MOD, nomenclature, Part Number (PN), Serial Number (SN), National Stock Number (NSN), and Naval Ammunition Logistics Code (NALC), where applicable, for inventory control. Specific guidelines on the proper logging procedures are included in the air launched missile logbook.

References to specific missile logs in appropriate COMNAVAIRSYSCOM technical manuals are superseded by this manual. Air launched missile logbook entries, or data for subsequent entry into the logbooks, are required at each level of maintenance. Air launched missile logbook entries are required when:

a. Modification of the missile has been accomplished.

b. Technical directives such as weapon bulletins and weapon changes have been incorporated.

c. Maintenance has been performed.

d. Missile testing has been accomplished including built-in-testing.

e. An age limited component has been replaced.

f. The extension of AUR MDD. Many times the logbook cannot be readily accessed when the AUR MDD on the container is updated: therefore, the MDD marked on the container takes precedence over the logbook. It is not necessary to unpalletize a unit pack to mark the new MDD on all sides of the container when a MDD is changed, extended or reestablished. Marking at least one end of the container and updating the material condition tag/label will be sufficient. Complete marking of the container will be accomplished on the next occasion that the unit pack is broken. The latest MDD marking on a container will be used provided that it matches the markings on the material condition tag/label. The logbook should be changed to reflect the more current MDD on the container at the first available opportunity that does not create additional workload to remove the logbook.

ORGANIZATIONAL	INTERMEDIATE	DEPOT
Install and remove wings, fins, external parts. Load and download missile on/from aircraft. Perform missile BIT. Perform missile preflight and postflight inspection. Data entry for targeting. Perform missile reprogramming, as required. Perform weapons Airborne Software Changes (ASCs) as required.	Inspect and stow AUR, containers, and cradles. Inspect and stow external parts. Clean missile and external parts as required. Perform paint touchup and corrosion control. Retorque body joint clamps as required. Remove from/replace in container. Replace container and cradle desiccant only. Selected intermediate maintenance activities are authorized air launched missile assembly or disassembly. Perform missile BIT and reprogram, as required. AUR and section testing. Perform weapons ASCs as required.	Inspect AUR. Inspect and test guidance and control sections or guidance and control groups. Inspect, test, replace rocket motor and sustainer. Selected igniter replacement authorized. Remove AUR and reinstall into container. Remove and replace section; replace internal and external component only. Inspect, repair, rework, modify warhead, and replace certain components of warhead, safe and arm device, and electronic firing switch. Inspect, test, repair, rework, modify, and replace fuze and Target Detection Device (TDD). Inspect, repair, rework, modify, and replace wings and fins. Repair and clean containers and cradles and replace minor container components. Perform major repairs on containers and cradles. Corrosion control, paint, restencil all sections listed above. Inspect, test, repair, rework, and modify guidance and control section or guidance and control group to assembly, subassembly, or component level. Reassemble and perform final system test. Repair, rework, regrain, replace, and modify rocket motor, igniters, and gas generators. AUR and section testing. Perform weapons ASCs as required.

Figure 1-1-3. Air Launched Missile Maintenance Levels and Actions

ACTIVITY	LEVEL OF RESPONSIBILITY
Squadron	Organizational level maintenance.
CVNs (Weapons Department), NMC Detachment, NWS or MCAS (Station Weapons)	Intermediate level maintenance.
NAWMU-1	Intermediate level maintenance and forward area test and repair capability.
NMC Continental Unitied States (CONUS) East Division Detachment Yorktown	Depot level maintenance. Designated overhaul point for wings, fins, and containers.
Naval Surface Warfare Center (NSWC) Division Crane	Designated overhaul point for batteries.
NSWC Indian Head	Designated overhaul point for rocket motors, gas generators, and igniters.
Expeditionary System Evaluation Division (ESED) Fallbrook	Ordnance Assessment, failure verification, and analysis of guidance and control sections, warhead, wings, and fins.
NAWCWD China Lake	Ordnance Assessment, failure verification, and analysis of warhead and Safe and Arm (S&A).
NSWC Indian Head	Ordnance Assessment of rocket motors, igniters, gas generators, and S&A.

Figure 1-1-4. Assigned Level of Maintenance for SPARROW

ACTIVITY	LEVEL OF RESPONSIBILITY
Squadron	Organizational level maintenance.
CVNs (Weapons Department), NMC Detachment, NWS or MCAS (Station Weapons)	Intermediate level maintenance.
NAWMU-1	Intermediate level maintenance and forward area test and repair capability.
Contractor: Raytheon Missile Systems Co.	Depot level maintenance for AUR and sections.
NWS Yorktown	AUR Ordnance Assessment and failure analysis.
NMC CONUS East Division Detachment Earle	Designated overhaul point for containers.
NAWCWD Point Mugu	Section Level R/R, test and repair capability. Depot level maintenance for AIM-120A

Figure 1-1-5. Assigned Level of Maintenance for AMRAAM

ACTIVITY	LEVEL OF RESPONSIBILITY
Squadron	Organizational level maintenance.
CVNs (Weapons Department), NMC Detachment, NWS or MCAS (Station Weapons) or L Class Ships	Intermediate level maintenance.
NAWMU-1	Intermediate, Depot level maintenance and forward area test and repair capability (AIM-9M series only).
NMC CONUS West Division Seal Beach Detachment Annex Fallbrook	Depot level maintenance (AIM-9M series only).
NMC CONUS East Division Detachment York-town	Depot Level Maintenance. Designated overhaul point for containers. (AIM-9M series only) Remove wings, fins and warheads.
NMC CONUS West Division Detachment Seal Beach	Designated overhaul point for containers.
Army Depot Tobyhanna	Designated overhaul point for AIM-9M guidance and control section.
Contractor: Raytheon Company	Depot level Maintenance (AIM-9X series only).
NSWC Crane	Designated overhaul point for target detector and S&A (AIM-9M series only).
NSWC Indian Head	Designated overhaul point for rocket motors, igniters, and gas generators (AIM-9M series only).
NAWCWD China Lake	Ordnance Assessment for target detector and S&A; Failure verification, and analysis for guidance and control section (AIM-9M series only).
NSWC Indian Head	Ordnance Assessment of rocket motors and gas grain generators (AIM-9M series only).
NSWC Crane	Designated overhaul point for AIM-9X, Target Detectors DSU-36/B and DSU-37/B.

Figure 1-1-6. Assigned Level of Maintenance for SIDEWINDER

ACTIVITY	LEVEL OF RESPONSIBILITY
Squadron	Organizational level (AUR) maintenance.
CVNs (Weapons Department), NMC Detachment, NWS or MCAS (Station Weapons)	Intermediate level (AUR) maintenance.
NAWMU-1	Intermediate level maintenance and forward area test and repair capability.
Contractor: ATK/Alleghany Ballistics Laboratory, Rocket City, WV-AARGM	Designated overhaul point for guidance and control sections.
Contractor: Raytheon Missile Systems-AARGM	Designated overhaul point for guidance and control sections.
Letterkenny Explosive Munitions Center	Depot level maintenance for AUR. Designated overhaul point for wings, fins and containers.
NSWC Indian Head	Designated overhaul point for rocket motors/warhead.
NWS Yorktown	Ordnance Assessment, failure analysis, and verification of guidance and control sections.
NSWC Indian Head	Ordnance Assessment of rocket motors/warhead.
NAWCWD China Lake	Ordnance Assessment of fuzing system batteries and target detectors.

Figure 1-1-7. Assigned Level of Maintenance for HARM/AARGM

ACTIVITY	LEVEL OF RESPONSIBILITY
Squadron	Organizational level maintenance.
CVNs (Weapons Department), NMC Detachment, NWS or MCAS (Station Weapons) or L Class Ships	Intermediate level maintenance.
NMC CONUS West Division Seal Beach Detachment Annex Fallbrook	Depot level (AUR) maintenance. Repair minor damage to wings and fins.
Air Force Logistics Center (AFLC) Ogden	Designated overhaul point for Center Aft Section (CAS), Hydraulic Action System (HAS).
Army Depot Tobyhanna	Designated overhaul point for Guidance and Control Section (GCS).
NSWC Indian Head	Ordnance Assessment of rocket motors.
NAWCWD China Lake	Ordnance Assessment of fuzing systems.

Figure 1-1-8. Assigned Level of Maintenance for MAVERICK

ACTIVITY	LEVEL OF RESPONSIBILITY
Squadron	Organizational level maintenance.
CVNs (Weapons Department), NMC Detachment, NWS or MCAS (Station Weapons)	Intermediate level maintenance.
NMC East Asia Division Detachment Guam	Receipt, Segregation, Storage and Issue (RSSI)/Missile Sentencing Inspection (MSI).
NMC East Asia Division Detachment Pearl Harbor	RSSI/MSI.
NAWMU-1	RSSI/MSI.
NMC CONUS East Division Detachment Yorktown	Intermediate level maintenance (designated AUR depot maintenance).
NMC CONUS West Division Detachment Seal Beach	Designated overhaul point for containers, RSSI/MSI.
NSWC Indian Head	Designated overhaul point & I level for cartridge actuated devices and propellant actuated devices. I & D level for CATMs and trainers.
Contractor: Boeing Aerospace	Designated overhaul point for all missile components.
NWS Yorktown	Guidance and Control (G&C).
NSWC Indian Head	Ordnance Assessment of turbojet engines (including fuel systems), boosters, rocket motors, cartridge actuated devices, and propellant actuated devices.
NAWCWD China Lake	Ordnance Assessment of fuzing systems and warheads.

Figure 1-1-9. Assigned Level of Maintenance for HARPOON

ACTIVITY	LEVEL OF RESPONSIBILITY
Squadron	Organizational level maintenance.
CVNs (Weapons Department), NMC Detachment, NWS or MCAS (Station Weapons)	Intermediate level maintenance.
NMC East Asia Division Detachment Guam	RSSI/MSI.
NMC East Asia Division Detachment Pearl Harbor	RSSI/MSI.
NAWMU-1	RSSI/MSI.
Weapons Station Earle (PHS&T Center)	Designated overhaul point for containers.
Contractor: Boeing Aerospace	Depot level maintenance.
NSWC Indian Head	Designated overhaul point and I level for cartridge actuated devices and propellant actuated devices. I & D level for DATMs.
Army Depot Tobyhanna	Designated overhaul point for seekers.
NAWCWD Point Mugu	Ordnance Assessment of AUR and missile peculiar support equipment.
NSWC Indian Head	Ordnance Assessment of turbojet engines, boosters, rocket motors, cartridge actuated devices, propellant actuated devices and fuel systems.
NAWCWD China Lake	Ordnance Assessment of fuzing systems and warheads.

Figure 1-1-10. Assigned Level of Maintenance for SLAM-ER

ACTIVITY	LEVEL OF RESPONSIBILITY
Squadron	Organizational level maintenance.
CVNs (Weapons Department), NMC Detachment, NWS or MCAS (Station Weapons) or L Class Ships	Intermediate level maintenance.
Army Depot Anniston	Performs minor missile maintenance and sentencing inspections.
Contractors: Lockheed Martin Missiles and Electronics	HELLFIRE Missile Depot-Designated repair overhaul point for AUR.
NAWCWD China Lake	Ordnance Assessment of fuzing systems/warheads.
Marine Corps Program Department, U.S. Army Aviation & Missile Command	Ordnance Assessment for the AUR, seeker, guidance, control and propulsion sections.

Figure 1-1-11. Assigned Level of Maintenance for HELLFIRE

ACTIVITY	LEVEL OF RESPONSIBILITY
Squadron	Organizational level maintenance.
CVNs (Weapons Department), NMC Detachment, NWS or MCAS (Station Weapons) or L Class Ships	Intermediate level maintenance.
Marine Corps Program Department	Performs Ordnance Assessment of AUR.

Figure 1-1-12. Assigned Level of Maintenance for TOW

ACTIVITY	LEVEL OF RESPONSIBILITY
Squadron	Organizational level maintenance.
CVNs (Weapons Department), NMC Detachment, NWS or MCAS (Station Weapons)	Intermediate level maintenance.
Contractor: Raytheon	Depot level maintenance.

Figure 1-1-13. Assigned Level of Maintenance for JSOW

ACTIVITY	LEVEL OF RESPONSIBILITY
Squadron	Organizational level maintenance.
CVNs (Weapons Department), NMC Detachment, NWS or MCAS (Station Weapons)	Intermediate level maintenance.
Contractor: Raytheon	Depot level maintenance.

Figure 1-1-14. Assigned Level of Maintenance for RAM

g. The missile is expended.

NOTE

AMRAAM does not report via the automated log books as the depot data is not downloaded to AWARS.

1.1.14.2 The missile logbooks are electronically generated at the AUR Depots and NAWMU and consists of a combined Configuration Summary Form (CSF) and missile log sheet, a logbook cover and any applicable safety tags (see Appendix A). As missiles return for maintenance at either AUR Depots or NAWMU the combined CSF/missile history log will be removed from the logbook and given to the AWARS representative at each site. This will allow for collection of Fleet maintenance data. A replacement Missile CSF/missile history log will be returned to the technician. In the case of missiles that are not currently barcoded, a blank combined form will be returned. For barcoded missiles the CSF portion of the combined form will be filled. The electronic generation of these combined forms will save printing and storage cost and provide an efficient means for collecting Fleet maintenance data.

NOTE

Selected AUR Organic, Intermediate, NAWMU and Commercial Depot Maintenance Activities that have proper access to the All Weapons Information System (AWIS), have the capability to generate new CSF. When missiles are returned to the Fleet by maintenance facilities new forms are generated by technical personnel that capture the maintenance actions performed at each site. The new forms are placed in the missile container. The CSF and any applicable safety tags are combined with an automated missile logbook form also obtained from the AWIS website.

1.1.14.3 Permanent files are periodically updated by maintenance data system input and are kept on each air launched missile. Upon missile expenditure the missile logbook will be destroyed by the intermediate maintenance activity or Weapons Department/NMC in a manner to prevent reconstruction of its contents. In the event the missile is the subject of a deficiency report, i.e. Conventional Ordnance Deficiency Report (CODR), Explosive Mishap Report (EMR), the logbook will be retained until closing action is completed and the Fleet Support Team (FST) determines the logbook is not required. Activities that receive incomplete or missing air launched missile logbooks and records, or receive an air launched missile without a log book or records, should contact the originating NAWMU or NWS for the logbook. Missing missile log books can be obtained by downloading them directly from the AWIS website by personnel with approved access for their T/M/S missile.

NOTE

Missile Configuration Summary/Logbooks are not required for HELLFIRE and TOW missiles and may be destroyed locally.

CHAPTER 1.2

Organizational Level Maintenance

Table of Contents

Paragraph	Subject	Page
1.2.1	General	1-2-1
1.2.2	Organizational Level Maintenance Responsibilities	1-2-1

List of Illustrations

Figure	Title	Page
1-2-1	Organizational Level Operational and Maintenance Responsibilities	1-2-2

CHAPTER 1.2

Organizational Level Maintenance

1.2.1 General. This chapter describes the air launched missile maintenance actions authorized to be performed by Navy and Marine Corps squadrons as prescribed in Volume I, Chapter 2.3, of this manual. Organizational level (O-level) maintenance directly supports and maintains the aircraft weapon system, which consists of the aircraft, air launched missile, and associated interface items.

1.2.2 Organizational Level (O-level) Maintenance Responsibilities. The air launched missile O-level maintenance is that maintenance which is performed by Navy and Marine Corps squadrons on a day-to-day basis in support of its operations. Figure 1-2-1 assigns the O-level maintenance actions performed on the air launched missiles listed in Chapter 1.1. Maintenance actions are described generally in Paragraphs 1.2.2.1 through 1.2.2.17. All maintenance actions are performed in accordance with the approved Naval Air Systems Command technical manuals, loading manuals, and checklists which have been developed for each air launched missile system and launch platform.

1.2.2.1 Organizational level maintenance for AIM-9X. AIM-9X O-level maintenance consists of missile uploading and downloading, pre-load visual inspections, BIT checks initiated from the aircraft and corrosion prevention. Organizational level maintenance tasks are performed by USN and USMC squadrons at Naval Air Station (NAS) and Marine Corps Air Station (MCAS) ashore and CVN, LH class afloat. Organizational level maintenance is performed by Work Center 230 USN Aviation Ordnancemen (AO) with Navy Enlisted Classification (NEC) codes 8342 and 8842, and USMC Aircraft Ordnance Technicians with Military Occupational Specialty (MOS) 6531.

1.2.2.2 Release and Control System Check. O-level Aviation Ordnance technicians (Marine) and/or Integrated Weapons Team (IWT) (Navy) members perform release and control checks on aircraft. Checks must be performed prior to missile loading, after configuration of the aircraft, where connections have been unmated and mated, and after any malfunction in the release and control system. For specific procedures, consult the applicable authorized airborne weapons and stores loading manual and checklist.

1.2.2.3 Aircraft Preparation and Inspection. Aircraft preparation and inspection is a step-by-step procedure which must be performed prior to loading. During preparation and inspection, O-level Aviation Ordnance personnel ensure that the aircraft is properly positioned and grounded. Impulse cartridges are removed from all weapon stations and armament switches are placed in the off, safe, or normal positions. Deficiencies must be corrected before the loading evolution can proceed. Individual aircraft procedures are specified in the applicable authorized airborne weapons and stores loading manual and checklist.

1.2.2.4 Missile Receipt and Inspection. O-level Aviation Ordnance personnel inspect each missile prior to loading to ensure integrity. Missiles are inspected for dents, cracks, proper mating, and security of the assembly. Motor fire receptacles must be inspected to ensure that they have dust covers and are clean and undamaged. Wings and fins must be inspected for dents, cracks, distortions, corrosion, and proper component operation. Missiles which do not meet inspection criteria should be rejected and the supporting intermediate maintenance activity notified.

Missile/ Weapon	Release & Control System Check	Aircraft Preparation & Inspection	Missile Receipt & Inspection	Missile Preparation for Loading	Aircraft Station Preparation	Missile Loading/ Downloading	Postload Quality Assurance Inspection	Testing
SPARROW	X	X	X	X[2]	X	X	X	X[3]
AMRAAM	X	X	X	X[2]	X	X	X	X[4,8]
SIDEWINDER	X	X	X	X	X	X	X	X[3]
SIDEWINDER AIM-9X	X	X	X	X	X	X	X	X[4]
HARM/AARGM	X	X	X[1]	X[2]	X	X	X	X
MAVERICK	X	X	X[1]	X	X	X	X	X[7]
JSOW	X	X	X	X	X	X	X	X[4]
HARPOON	X	X	X	X[2]	X	X	X	X[5,6]
SLAM-ER	X	X	X	X[2]	X	X	X	X[6]
HELLFIRE	X	X	X	X	X	X	X	X[4]
TOW	X	X	X	X	X	X	X	X

NOTES:

1. Missiles are delivered as preloaded accessory suspension equipment.
2. Attach wings, fins and buffer in accordance with the applicable authorized loading manual.
3. Perform a missile on-aircraft test in accordance with the applicable authorized loading checklist.
4. Perform a Built-In-Test on missiles after loading in accordance with the applicable authorized loading checklists.
5. On surface ships and submarines, perform a Built-In-Test on HARPOON missiles as follows: conduct Built-In-Test after (a) after loading the launcher; (b) every 6 months after onload; (c) 2 weeks prior to unload; (d) 2 weeks prior to deployment.
6. (F/A 18A-D) Perform Built-In-Test and AWW-13 data link pod marriage check as a post load check in accordance with the applicable authorized loading manual. (P-3C) Perform a Built-In-Test during pre-flight checks.
7. Perform a laser tracking test on MAVERICK AGM-65E missiles in accordance with the applicable authorized loading checklist.
8. Verify missile tactical software version and reprogram as required.

Figure 1-2-1. Organizational Level Operational and Maintenance Responsibilities

Missile/ Weapon	Missile Arming- Dearming/	Post- Operational Inspection	Deficiency Reporting	Technical Directives	Logbook Maintenance	Airborne Software Changes	Automated Captive Carry Data Collection & Report
SPARROW	X	X	X	X	X		X
AMRAAM	X	X	X	X	X		X
SIDEWINDER	X	X	X	X	X		X
SIDEWINDER AIM-9X	X	X	X	X	X		
HARM/AARGM	X	X	X	X	X		X
MAVERICK	X	X	X	X	X		X
JSOW	X	X	X	X	X		X
HARPOON	X	X	X	X	X		X
SLAM-ER	X	X	X	X	X		X
HELLFIRE	X	X	X	X			
TOW	X	X	X	X			

Figure 1-2-1. Organizational Level Operational and Maintenance Responsibilities - contd.

1.2.2.5 Missile Preparation for Loading. After receiving the missile and ensuring proper operational configuration, the missile is prepared for loading. Procedures vary depending on the aircraft type, the missile type, and the aircraft station to be loaded. However, general preparation consists of wing and fin installation when applicable and removal of dust covers. Specific procedural responsibilities are outlined in the applicable authorized airborne weapons and stores loading manual and checklist.

1.2.2.6 Aircraft Station Preparation. O-level Aviation Ordnance personnel prepare each aircraft station that will be loaded. Preparation consists of readying the bomb rack or launcher to receive a missile or missile and launcher combination. Refer to the applicable authorized airborne weapons and stores loading manual for actual procedures.

1.2.2.7 Missile Loading. During missile loading, O-level Aviation Ordnance personnel install airborne weapons and stores on an aircraft. Loading evolutions are performed within a designated loading and rearming area in accordance with the authorized airborne weapons and stores loading checklist. Refer to the applicable aircraft airborne weapons and stores loading manual and checklist for specific loading procedural requirements.

1.2.2.8 Postload Quality Assurance Inspection. A certified quality assurance inspector performs an inspection of the missile and the aircraft interface after the loading operation has been completed. The inspection ensures that missiles have been loaded properly and that all procedural steps have been performed correctly.

1.2.2.9 Testing. O-level Aviation Ordnance personnel perform missile tests after loading to ensure proper interface between the aircraft and the missile. Missile on-aircraft tests, built-in-tests, or built-in self tests are performed on missiles to improve confidence that the weapon, as well as the launch platform, will function properly. Procedures for testing are contained in the applicable authorized aircraft airborne weapons and stores loading manual. Personnel aboard ships employing air launched missiles in surface launched modes perform built-in-test or daily system operational tests.

1.2.2.10 Missile Arming. Arming is that operation which changes the missile from a safe condition to a state of readiness for initiation. During arming, O-level maintenance personnel remove bomb rack and missile launcher safety pins and perform any other physical changes necessary to complete arming, such as flipping S&A switches. These functions shall be performed in an authorized arming area utilizing the arming and safing hand signals contained in the applicable aircraft loading manual, Chapter 6.1 of this Volume, or the appropriate Shore/CVN/Amphibious NATOPS manual.

1.2.2.11 Missile Dearming. Dearming is performed to change a weapon from a state of readiness for initiation to a safe condition. All arming and dearming must be conducted in an authorized arming area utilizing the arming and safing hand signals contained in the applicable aircraft loading manual, Chapter 6.1 of this Volume or the appropriate Shore/CVN/Amphibious NATOPS manual.

1.2.2.12 Post-Operational Inspection. O-level Aviation Ordnance personnel perform a post-operational inspection in the dearming area to ensure missile system components are not damaged, loose, or broken. Missiles are checked for visual indications that an unsuccessful launch was initiated, such as discoloration in the vicinity of the battery, leaking electrolyte, or hydraulic fluid leaking. If an unsafe situation is discovered, the proper authority must be notified immediately and the arming crew will initiate emergency procedures.

1.2.2.13 Missile Downloading. Downloading is the process of removing unexpended missiles from the aircraft. It is performed within the loading and rearming area and is conducted in accordance with applicable airborne weapons and stores loading manuals and checklists.

1.2.2.14 Deficiency Reporting. Deficiency reports are initiated at O-level when a deficiency is discovered during the performance of any of the assigned O-level maintenance actions. Deficiency reporting procedures are contained in Volume I, Chapter 4.6.

1.2.2.15 Technical Directives. O-level Aviation Ordnance personnel are responsible for assuring that Notices of Ammunition Reclassification (NARs), Airborne Weapon Bulletins (AWBs), and Airborne Weapon Changes (AWCs) directed to that level are complied with.

1.2.2.16 Logbook Maintenance. To facilitate air launched missile logbook maintenance, O-level personnel are responsible for providing significant missile information, such as captive carry time, damage to the missile, and missile failure or expenditure, to the Weapons Department/NMC for incorporation into the logbooks.

1.2.2.17 Airborne Software Changes (ASCs). Inherent in the technology of today's weapons systems is the ability to change the software associated with operation of those systems. It is critical for operational mission success that the directed current software version is loaded, and applicable weapons tracking information systems reflect current status for each cataloged weapon. The following is the minimum procedures to provide policy for marking, annotation, and tracking of weapon ASCs:

a. Naval Air Systems Command (NAVAIRSYSCOM) issue ASC for the applicable weapon system.

b. Tiger teams and/or Fleet weapons personnel will reprogram applicable inventory.

c. Cognizant personnel will annotate completion of reprogramming effort in the weapons logbook unless through container reprogramming precludes the action.

d. Cognizant personnel will annotate completion of reprogramming effort on the weapon container material condition code tag.

e. Cognizant personnel will ensure reprogramming action is recorded in either the All Weapons Information System (AWIS).

1.2.2.18 Automated Captive Carry Data Collection and Report. O-level Aviation Activities personnel who are authorized by their chain of command to access AWIS enter captive flight data into Automated Captive Carry Entry System (ACES). Personnel with proper access are required to follow the prescribed procedures outlined in Volume I, Chapter 3.2. They are responsible to ensure important missile information is recorded, and validate the following data weapon Type/Model/Series (T/M/S), Serial Number (SN), aircraft BUNO, aircraft flight hours/date, station, upload/download date, event, Navy Ammunition Logistics Code (NALC), Elapsed Time Indicator (ETI) reading (if applicable), download code and any remarks as necessary.

NOTE

Captive carry reporting requirements are listed in Volume I, Chapter 3.2.

CHAPTER 1.3

Intermediate Level Maintenance

Table of Contents

Paragraph	Subject	Page
1.3.1	General	1-3-1
1.3.2	Intermediate Level Maintenance Responsibilities	1-3-1
1.3.3	Crossdecking Requirements	1-3-8
1.3.4	Fly-To-Die Concept	1-3-8
1.3.5	Recertification and Repair	1-3-9

List of Illustrations

Figure	Title	Page
1-3-1	Intermediate Level Maintenance Responsibilities	1-3-2

CHAPTER 1.3

Intermediate Level Maintenance

1.3.1 General. This chapter describes the air launched missile maintenance actions assigned to Navy Munitions Command (NMC) Detachments, Shipboard Weapons Departments, and Marine Corps Air Stations (Station Weapons), and Naval Airborne Weapons Maintenance Unit (NAWMU) as prescribed in Volume I, Chapter 2.3, of this manual. Intermediate level (I-level) maintenance enhances and sustains the combat readiness and mission capability of supported activities by providing quality and timely air launched missile support at the closest location with the lowest practical expenditure. NAWMU are assigned as units of the operating forces and provide forward area All-Up-Round (AUR) air launched missile testing, repair, and recertification. However, the NAWMU also perform the same essential functions as the Naval Weapons Stations (NWS) or NMC Detachments and in some cases maintenance responsibilities for the two types of establishments overlap. As such, the majority of the maintenance responsibilities for these establishments are assigned in Chapter 1.4 of this Volume.

1.3.2 Intermediate Level Maintenance Responsibilities. Air launched missile maintenance is the responsibility of, and is performed by, designated maintenance activities in support of using units. Figure 1-3-1 assigns the I-level maintenance actions that are performed on the air launched missiles listed in Chapter 1.1. These assigned maintenance actions are described generally in Paragraphs 1.3.2.1 through 1.3.2.20. All maintenance actions are to be performed in accordance with the approved technical manuals, which have been developed for each air launched missile system.

1.3.2.1 Receiving and Inspection. Inspections are conducted on all air launched missile containers or cradles received. Containers are inspected for proper marking and tagging and any possible damage. A container or cradle that is dented, crushed, punctured, or appears to have been tampered with must not be stored without first examining its contents. If the air launched missile is damaged and that damage appears to be the result of damage to the container or cradle, the proper authority shall be notified for appropriate deficiency reporting and disposition instructions.

1.3.2.2 Storage and Handling. I-level maintenance is responsible for air launched missile storage, which includes deep stowage, and ready service storage of air launched missiles issued to the Organizational level to satisfy operational requirements. All handling, including strikedown and strikeup, storing, and transporting, will be performed utilizing authorized equipment.

1.3.2.3 Unpackaging Inspection. When the containerized air launched missile is removed from storage and decontainerized in preparation for ready service or delivery to the using activity, an unpackaging inspection is performed. The inspection assures that no damage or moisture intrusion to the air launched missile has occurred during storage. A thorough visual inspection is performed to ensure that the safe and arm mechanism is in the safe position and that no damage or corrosion is evident. Remove the logbook and enter the unpackaging inspection results. Store logbooks of unpackaged units in an accessible area in the missile preparation space until repacking occurs.

Missile/ Weapon	Receiving & Inspection	Storage & Handling	Unpackaging Inspection	Cleaning	Paint Touchup	Marking	Preservation	Lubrication	Installation & Removal of Wings & Fins	Preloaded Accessory Suspension Equipment (PASE) Mating
SPARROW	X	X	X[3]	X	X		X			
AMRAAM	X	X	X	X	X		X			
SIDEWINDER	X	X	X[3]	X	X		X		X	
SIDEWINDER AIM-9X	X	X	X	X	X		X		X	
HARM/ AARGM	X	X	X[3]	X	X		X		X	X[6]
MAVERICK	X	X	X	X	X		X			X[5]
JSOW	X	X	X	X						
HARPOON	X	X	X	X	X		X		X	
SLAM-ER	X	X	X	X	X		X		X	
HELLFIRE	X	X	X	X	X		X			
TOW	X[1,2]	X	X	X[5]	X[4,5]		X[4,5]			

NOTES:

1. The TOW container consists of a metal tube equipped with a removable end cover.
2. Containers are shipped nine per unit load for basic TOW and 12 per unit load for TOW-2A.
3. Wings and fins may be shipped in separate containers.
4. Since TOW is not removed from the launcher at Intermediate level maintenance, cleaning and paint touchup is only accomplished on the launch container.
5. Preservation consists of environmental protection of the launcher only.
6. HARM/AARGM missiles are mated with the LAU-118 launcher.

Figure 1-3-1. Intermediate Level Maintenance Responsibilities

Missile/ Weapon	Ready Service Inspection	Assembly & Test	Deficiency Reporting	Logbook Mainte-nance	Requisi-tioning	Shipping	Technical Directives	Record Keeping & Reporting	Airborne Software Changes	Automated Captive Carry Data Collection & Report
SPARROW	X	X	X	X	X	X	X	X		X
AMRAAM	X	X[7]	X	X	X	X	X	X		X
SIDEWINDER	X		X	X	X	X	X	X		X
SIDEWINDER AIM-9X	X	X[8]	X	X	X	X	X	X		Note 9
HARM/ AARGM	X		X	X	X	X	X	X		X
MAVERICK	X		X	X	X	X	X	X		X
JSOW	X	X[7]	X	X	X	X	X	X		X
HARPOON	X		X	X	X	X	X	X		X
SLAM-ER	X	X[7]	X	X	X	X	X	X		X
HELLFIRE	X		X	X	X	X	X	X		X
TOW	X[5]		X		X	X	X	X		

NOTES:

5. Preservation consists of environmental protection of the launcher only.
7. Perform missile Built-In-Test or Reprogramming on SLAM-ER, JSOW and AMRAAM missiles in accordance with applicable authorized checklists/ manual.
8. AIM-9X only (BIT/Reprogramming only, no assembly).
9. CMBRE data shall be uploaded utilizing the All Weapons Information System (AWIS) CMBRE module located on the AWIS website at https://awis.navair.navy.mil.

Figure 1-3-1. Intermediate Level Maintenance Responsibilities - contd.

1.3.2.4 Cleaning. Cleaning consists of the removal of contaminants such as dirt, grease, salt spray, oil, and other elements that aid corrosion. Cleaning requires a knowledge of the materials and methods needed to remove each of these contaminants. As a general rule, the mildest cleaning method available that will work effectively is used. NAVAIR 01-1A-75 (Airborne Weapons and Associated Equipment, Consumable Material Applications and Hazardous Materials Authorized Use List), addresses the authorized materials, applications, and procedures for preventive and corrective cleaning and corrosion control measures for air launched missiles. Specifically, NAVAIR 01-1A-75 addresses the procedures to be followed for each type of substrate (metallic and non-metallic) to be cleaned, as well as the proper material to be used.

1.3.2.5 Paint Touchup. Most air launched missiles are subject to preservation and painting procedures as part of I-level maintenance. I-level maintenance personnel clean all surfaces before applying the coating, ensuring that no cleaning material residue is trapped in fasteners, points, etc.; these areas can become contaminated and corrosion will occur. While material such as oils and sealants act as a preservative, painting is generally the most effective means of preserving metal. NAVAIR 01-1A-75 lists the cleaning materials, primers, and paints used in the preservation and corrosion control of air launched missiles. Painting is limited to the touchup of areas which have been damaged by abrasion, superficial scratches, or in areas where the paint has been removed in order to treat corrosion. Touchup painting is limited to a maximum of 25% of any section or component. Painting requirements that exceed this criterion must be performed at Depot level maintenance activities in an authorized painting area (usually an enclosed paint booth).

1.3.2.6 Marking. I-level repair facility personnel re-stencil all markings obliterated or removed during repair or painting in accordance with the applicable authorized technical manual, and NAVAIR 01-1A-75.

1.3.2.7 Preservation. Corrosion preventive compounds, adhesives, and sealants shall be applied only when inspection results warrant and during maintenance procedures when replacement parts require it. Corrosion preventive compounds, adhesives, and sealants are applied using approved materials and methods listed in accordance with the applicable authorized technical manuals, and NAVAIR 01-1A-75.

1.3.2.8 Lubrication. I-level repair facility personnel perform lubrication in accordance with the applicable authorized technical manual using the lubricants authorized in NAVAIR 01-1A-75.

1.3.2.9 Installation and Removal of Wings and Fins. To facilitate loading and downloading, many air launched missiles require wings and fins to be installed after the missile is mounted on the suspension and release equipment and removed prior to commencing the downloading evolution. These procedures are specific steps in the loading checklists for each applicable missile. In other applications, I-level maintenance personnel install some or all of the missile wings and fins prior to delivery to the user activities.

1.3.2.10 Preloaded Accessory Suspension Equipment (PASE) mating. The loading procedures for the AGM-88 HARM/AARGM, and AGM-65 MAVERICK require the missile launcher (LAU-117 and LAU-118) to be mated to the missile by I-level maintenance personnel prior to delivery to the Organizational level. The assembled missile and launcher combination is loaded directly to the aircraft bomb rack.

1.3.2.11 Ready Service Inspection. A ready service inspection is an inspection of an AUR missile that has been removed from its container and placed in a ready service magazine prior to issue to a user activity. The inspection is performed by I-level maintenance personnel responsible for issuing the AUR missile. A ready service inspection consists of inspecting the AUR missile for proper configuration, damage, loose or missing components, corrosion, or other conditions that render the AUR missile unsafe or

hazardous. An AUR missile that is determined to be Non Ready-For-Issue (NRFI) shall be rejected and the proper authority notified. Make an entry into the appropriate logbook section describing the NRFI condition complete with date, activity, and inspection criteria.

1.3.2.12 Assembly and Test. Under the AUR missile concept, air launched missile assembly and testing is not normally performed by I-level maintenance activities; JSOW and AMRAAM being the notable exception.

NOTE

Under the Organizational to Depot concept (i.e. SPARROW, JSOW and AMRAAM), Built-In-Test (BIT) and Reprogramming may be performed by Intermediate level activities.

1.3.2.12.1 AIM-9X BIT/Reprogramming. I-level maintenance is responsible for AIM-9X BIT/Reprogramming functions. AIM-9X BIT testing will be required for the following situations:

a. There has been an on-aircraft failure.

b. Prior to containerization of AIM-9X/CATM-9X.

c. Every 180 days (Ashore) or at the end of a deployment cycle/prior to containerization (Afloat), the maintenance log files and Missile Event Data Files (MEDF) of all affected missiles will be downloaded using the Common Munitions BIT Reprogramming Equipment (CMBRE) utility feature. The data shall be uploaded utilizing the All Weapons Information System (AWIS) CMBRE module located on the AWIS website at https://awis.navair.navy.mil. AIM-9X reprogramming will be required when the AUR Operational Flight Software (OFS) changes as directed by Airborne Software Change (ASC), Technical Directive (TD) or the AUR BIT fails and the maintainer reprograms the AUR to try and clear the failure in accordance with applicable maintenance manuals.

d. Intermediate level Maintenance for AIM-9X. AIM-9X I-level maintenance consists of missile storage; breakout; visual inspections and corrosion control; identification, removal, and replacement of faulty components (wings, fins, forward umbilical cable, forward and aft sections of the harness cover, buffer connector, container hardware); final visual inspection to verify the integrity of the repair; in/out container BIT/reprogramming, and missile delivery to the flight line/flight deck. Intermediate level maintenance is performed by USN and USMC I-level maintenance activities ashore (NAS and MCAS) and afloat (CVN). Naval Weapons Stations (NWS) and NMCs perform Receipt, Segregation, Storage, and Issue (RSSI) type inspections of all Fleet return assets. They also perform pre-shipping inspections and ship assets as directed by the Naval Supply Systems Command Global Logistics Support (NAVSUP GLS AMMO) Item Manager (IM) in Mechanicsburg, PA. For CVN operations, BIT/Reprogramming will be performed as directed by the Ordnance Handling/Weapons Officer using trained personnel (or by NAWMU-1 outside of CONUS who may also assist in training and performing this function). BIT/Reprogramming will be performed using the CMBRE, AN/GYQ-79 or AN/GYQ-79A and the AIM-9X Test Program Set (TPS), TTU-574/E24A or ADU-891(V)1/E. Repair of inoperable AUR missiles will be accomplished at the contractor depot. Missile maintenance is performed by Weapons Department/NMC/USN Aviation Ordnance personnel with NEC 6801 and USMC personnel with MOS 6541. The NWS and NAVMAG will serve as the RSSI facility.

1.3.2.13 Deficiency Reporting. Deficiency reports are initiated at I-level maintenance when a deficiency is discovered during the performance of any of the assigned Intermediate level maintenance actions. Deficiency reporting procedures are contained in Volume I, Chapter 4.6 of this manual.

1.3.2.14 Logbook Maintenance. I-level maintenance is assigned the responsibility for air launched missile logbook maintenance. This assignment includes not only intermediate maintenance actions which require logbook entry, but also those data entries submitted from the Organizational level and operational activities.

NOTE

AMRAAM does not report via the automated logbooks as the depot data is not downloaded to AWARS.

1.3.2.14.1 In some cases the NAWMU, NWS or NMC Detachments place the air launched missile logbook in the missile container before attaching a security seal. In these cases, if the seal is intact, it is not necessary to open the container for logbook removal and the air launched missile can be deep stowed. However, upon removal of the air launched missile from the container, logbook entries are required whenever:

a. Modification of the air launched missile has been accomplished.

b. TDs such as Airborne Weapon Bulletins (AWBs), Airborne Weapon Changes (AWCs), and Airborne Software Changes (ASCs) have been incorporated.

c. Maintenance has been performed.

d. Air launched missile testing has been accomplished.

e. Shipping or receiving transactions occur.

f. An age-limited component has been replaced.

g. The air launched missile is captive carried.

h. The air launched missile is expended.

i. Any unusual occurrences (e.g. drop, over temperature, battery explosion, etc.).

j. The AUR Maintenance Due Date (MDD) on the container has been updated and the logbook has not been changed to reflect the update. The MDD on the container takes precedence over the logbook MDD.

1.3.2.14.2 Permanent files are kept on each air launched missile, which are periodically updated by maintenance data system inputs. Upon expenditure of the air launched missile, the missile logbook will be destroyed by the Intermediate maintenance activity, Weapons Department or NMC Detachment in a manner to prevent reconstruction of its contents. In the event the missile is the subject of a deficiency report, i.e. Conventional Ordnance Deficiency Report (CODR), Explosive Mishap Report (EMR), the logbook will be retained until closing action is completed and the Fleet Support Team (FST) determines the logbook is not required. Activities receiving incomplete or missing air launched missile logs and records should contact the originating NAWMU, NWS, or NMC Detachment for the logbook, initiate a Quality Deficiency Report (QDR), and then contact the central data collection agency for the latest update or logbook replacement.

1.3.2.15 Requisitioning. I-level maintenance is responsible for the requisition of air launched missiles in accordance with established allowances. The approved basic stock level of missiles is the quantity required at a NMC Detachment or Marine Corps Air Station (Station Weapons) to support all aspects of that activity's mission. The missile mission load allowance is the quantity required by the Weapons Department aboard the ship to meet the ship's assigned mission. Submit requisitions as provided in the

current editions of NAVSUP P-724. Requisitions not filled from in-theater (Fleet) assets are sent to NAVSUP GLS AMMO for air launched missiles and all other conventional ordnance. Requisitions of air launched missiles for allowance replenishment, scheduled training, or deployment loadout must be submitted by Naval message to NAVSUP GLS AMMO Detachment not earlier than 90 days, but not less than 60 days, before the required delivery date. Carriers loading via a cargo ship must use the date when the cargo ship will commence onload, not the underway replenishment date. The required delivery date should be updated as changes occur.

1.3.2.16 Shipping. Prior to shipment, air launched missiles and their associated hardware (including logbooks) which have been decontainerized are returned to their containers and repackaged in accordance with the applicable authorized technical manual. Containers are sealed, marked, tagged and entered into the Ordnance Information System (OIS).

1.3.2.17 Technical Directives. I-level ordnance personnel are responsible for assuring that TDs such as Notices of Ammunition Reclassification (NARs), AWBs and AWCs directed to that level are complied with.

1.3.2.18 Record Keeping and Reporting. I-level maintenance is responsible for air launched missile record keeping and reporting for both Organizational and Intermediate level maintenance. This includes air launched missile logbook maintenance and OIS reporting requirements.

1.3.2.19 Airborne Software Changes. Inherent in the technology of today's weapons systems is the ability to change the software associated with operation of those systems. It is critical for operational mission success that the directed current software version is loaded, and applicable weapons tracking information systems reflect current status for each cataloged weapon. The following is the minimum procedures to provide policy for marking, annotation, and tracking of weapon ASCs:

a. Naval Air Systems Command (NAVAIRSYSCOM) issue ASC for the applicable weapon system.

b. Tiger teams and/or Fleet weapons personnel will reprogram applicable inventory.

c. Cognizant personnel will annotate completion of reprogramming effort in the weapons logbook unless through container reprogramming precludes the action.

d. Cognizant personnel will annotate completion of reprogramming effort on the weapon container material condition code tag.

e. Cognizant personnel will ensure reprogramming action is recorded in either the AWIS or a contractor database which is accessible through AWIS.

1.3.2.20 Automated Captive Carry Data Collection and Report. I-level maintenance activities personnel who are authorized by their chain of command to access AWIS enter captive flight data into Automated Captive Carry Entry System (ACES) Local Area Network (LAN) or web applications. Personnel with proper access are required to follow the prescribed procedures outlined in Volume I, Chapter 3.2. They are responsible to ensure important missile information is recorded, and validate the following data weapon Type/Model/Series (T/M/S), Serial Number (SN), aircraft BUNO, aircraft flight hours/date, station, upload/download date, event, Navy Ammunition Logistics Code (NALC), Elapsed Time Indicator (ETI) reading (if applicable), download code and any remarks as necessary.

NOTE

Captive carry reporting requirements are listed in Volume I, Chapter 3.2.

1.3.3 Crossdecking Requirements. Upon completion of the deployment, air launched missiles which meet the following requirements may be transferred (cross-decked) to the relieving ship:

a. Containerized air launched missiles, which have been deep stowed and have sufficient time before MDD expiration for the receiving ship to complete its deployment.

b. Ready service missiles that have sufficient MDD time remaining may be crossdecked. The MDD may be extended to meet an operational commitment by requesting an extension as identified in Appendix D.

c. AMRAAM, HARM/AARGM, HARPOON, HELLFIRE, JSOW, MAVERICK, SIDEWINDER, SLAM-ER, SEA SPARROW and SPARROW missiles may be crossdecked unless they fail a BIT, fail an on aircraft test, experience visible damage, or will reach MDD before the completion of the next deployment. The MDD may be extended to meet an operational commitment by requesting an extension as identified in Appendix D of this manual.

d. Captive flown missiles may be crossdecked unless they fail a required BIT, experience visible damage, or will reach MDD before the completion of the next deployment.

e. JSOW has a Cats/Traps Limitation as listed:

(1) AGM-154A all NALCs 50 Cats/Traps.

(2) AGM-154C all NALCs 50 Cats/Traps.

(3) AGM–154C-1 all NALCS 50 Cats/Traps. JSOW Weapons will be placed in Condition Code "C" when 40 Cats/Traps have been logged. At 50 Cats/Traps place weapon in Condition Code "F".

f. JSOW Flight Hour Limitations as listed:

(1) AGM-154A all NALCs 300 Hours.

(2) AGM-154C all NALCs 300 Hours.

(3) AGM-154C-1 all NALCs 300 Hours. JSOW Weapons will be placed in Condition Code "F" at 300 hours.

g. Ammo Accounting Division (Afloat: Shipboard Weapons Department, Ashore: Navy Munitions Command (NMC) Detachments, Navy Weapons Departments, and Marine Corps Air Stations (Station Weapons)) with ACES access will total the captive carried time on serialized missile T/M/S and print a copy of the remaining automated captive carry time to date. This is done as required, but at least upon transfer of custody print the logbook reports and enter a copy into missile logbooks. Ammo accounting division personnel can then delete the crossdecked serialized T/M/S accumulated captive carry time from the ACES database.

NOTE

Captive carry reporting requirements are listed in Volume I, Chapter 3.2.

1.3.4 Fly-To-Die Concept. The fly-to-die concept encompasses all Captive Air Training Missiles (CATMs) and Dummy Air Training Missiles (DATMs) regardless of missile type. Each CATM/DATM will be used for training until a failure is detected and verified. This concept does not exclude CATMs and DATMs from required preventive maintenance or inspections. Upon failure, CATMs and DATMs (excluding 9X Sidewinder) are returned to a NAWMU or Weapons Support Facility (WSF) for repair and recertification. 9X Sidewinder will be dispositioned by FST to Raytheon Contractor Depot.

1.3.5 Recertification and Repair. Upon completion of the deployment, AMRAAM, HARM/AARGM, HARPOON, MAVERICK, SIDEWINDER, SLAM-ER, SEA SPARROW, and SPARROW missiles which meet any of the following criteria must be returned to a maintenance activity for repair and recertification before reissue; for AIM-9X and JSOW, only steps b and c apply:

a. Missiles with expired MDDs.

b. Missiles which failed missile on-aircraft tests, BIT, built-in self tests, 180-day CMBRE BIT/Inquiry or system operational tests.

c. Missiles that have been damaged.

CHAPTER 1.4

Depot Level Maintenance

Table of Contents

Paragraph	Subject	Page
1.4.1	General	1-4-1
1.4.2	Industrial Maintenance Processing	1-4-1
1.4.3	Receipt, Segregation, Storage, and Issue	1-4-22
1.4.4	Missile Sentencing Inspection	1-4-22
1.4.5	Material Received for Further Transfer	1-4-22
1.4.6	Corrosion Control and Lubrication	1-4-23
1.4.7	All-Up-Round (AUR) Missile and Section Testing and Test Equipment Certification	1-4-23
1.4.8	Failure Verification	1-4-23
1.4.9	Removal and Replacement of Missile Sections	1-4-24
1.4.10	Deficiency Reporting	1-4-24
1.4.11	Warranty Actions	1-4-24
1.4.12	Organic Depot and Commercial Contractor Maintenance	1-4-25
1.4.13	Technical Directives	1-4-25
1.4.14	Logbook Maintenance	1-4-25
1.4.15	Record Keeping and Reporting	1-4-26

List of Illustrations

Figure	Title	Page
1-4-1	Assignment of Air Launched Missile System Responsibilities to NMC Detachments and Naval Airborne Weapons Maintenance Units	1-4-2
1-4-2	SPARROW Fleet Return	1-4-3
1-4-3	SPARROW New Production/Repair/Build-up from Sections	1-4-4
1-4-4	SIDEWINDER AIM-9M Fleet Return	1-4-5
1-4-5	SIDEWINDER AIM-9M New Production/Repair from Sections	1-4-6
1-4-6	HARM Fleet Return	1-4-7
1-4-7	AARGM Fleet Return	1-4-8
1-4-8	HARM New Production/Repair	1-4-9
1-4-9	AARGM New Production/Repair	1-4-10
1-4-10	MAVERICK Fleet Return	1-4-11
1-4-11	MAVERICK New Production/Repair	1-4-12
1-4-12	HARPOON Basic Missile Flow	1-4-13
1-4-13	HARPOON Air Launched Missile Flow	1-4-14
1-4-14	HARPOON CAP/CAN Missile Flow	1-4-15
1-4-15	SLAM-ER New Production/Repair	1-4-16
1-4-16	JSOW New Production/Repair	1-4-16
1-4-17	SIDEWINDER AIM-9X New Production/Repair	1-4-17
1-4-18	Assignment of Air Launched Missile Responsibilities to Naval Air Warfare Centers, NMC Detachments, Army Depots and Commercial Contractors	1-4-20

CHAPTER 1.4

Depot Level Maintenance

1.4.1 General. This chapter describes the air launched missile maintenance actions authorized to be performed by Naval Weapons Support Facilities (WSFs), Fleet Readiness Centers (FRCs), and other industrial level maintenance establishments as prescribed in Volume I, Chapter 2.3. Depot level (D-level) maintenance supports weapons and end item systems in a state of operational readiness consistent with the mission requirements of the operating forces at the least total cost. Through the use of more extensive facilities, skills, and materials, D-level functions are carried out in industrial establishments or in the field by personnel from such establishments. As central points in the missile maintenance pipeline, Naval Airborne Weapons Maintenance Unit (NAWMU) are assigned additional repair and recertification responsibilities. The maintenance actions include the provision of a forward area test, repair, and recertification capability for All-Up-Round (AUR) air launched missiles or missile sections or components that have malfunctioned or have exceeded their Maintenance Due Dates (MDD).

1.4.2 Industrial Maintenance Processing.

1.4.2.1 Figure 1-4-1 assigns the activity responsible for performing air launched missile maintenance. All maintenance actions are performed in accordance with the applicable approved technical manuals. In addition the associated Fixed Price Matrix (FPM) provides maintenance labor standards for the processing of air launched missiles and containers at weapons stations. The FPM facilitates workload planning, staffing, budgeting, and management control among maintenance activities by providing a uniform work breakdown structure, and encourages productivity initiatives and improvements. The FPM offers to the WSFs a summary, both in man-hours and dollars, of each weapon system delineated by distinct maintenance processes, and, as such, it is the basis from which the funding process progresses. The FPM will be published twice yearly, in May with recommended labor standards, and in August with negotiated fixed prices per unit per process.

1.4.2.2 Figures 1-4-2 through 1-4-17 depict the industrial maintenance processing flow for Fleet return and new production AUR air launched missiles listed in Chapter 1.1 of this manual and their major sections and components. A brief description of the maintenance actions performed on each air launched missile is presented in the following paragraphs.

a. AMRAAM. D-level maintenance consists of the inspection, testing, reprogramming, and repair of Fleet returned missiles. Repaired and tested AUR missiles are packaged in AUR missile containers for shipment to user activities. Required repairs, cleaning, painting, and preservation in support of these operations are also authorized (see Paragraph 1.4.6 of this Chapter). Sections or components of rejected missiles are repaired at the D-level. This AUR approach eliminates the need for the Navy to maintain complex test systems and stocks of spare missile sections at organic repair facilities. The Navy does not procure or stock spare missile sections. All D-level AUR and section level maintenance is performed at the contractor depot.

b. HARM. Maintenance includes the assembly of sections into AUR missiles, testing, fault isolation of Fleet returned AUR missiles, and repair by replacement of faulty sections or components. Wing and fin repair and container repair are also included. Required repairs, cleaning,

Missile/ Weapon	NMC CONUS West Division Detachment Seal Beach Annex Fallbrook	NMC CONUS East Division Detach-ment Yorktown	NAWMU-1 Guam (Note 1)	LEMC Letterkenny
AMRAAM			X	
HARM/AARGM			X	X[2]
HARPOON		X[3]	X	
MAVERICK	X	X	X	
SIDEWINDER AIM-9M	X[2]	X[2]	X	
SIDEWINDER AIM-9X			X	
SPARROW		X[2]	X	

NOTES:

1. Designated Intermediate level maintenance reference Volume I, Paragraph 1.3.1.
2. Assignment includes designated overhaul point responsibilities for wings and fins.
3. Assignment includes designated overhaul point responsibilities for AUR.

Figure 1-4-1. Assignment of Air Launched Missile System Responsibilities to NMC Detachments and Naval Airborne Weapons Maintenance Units

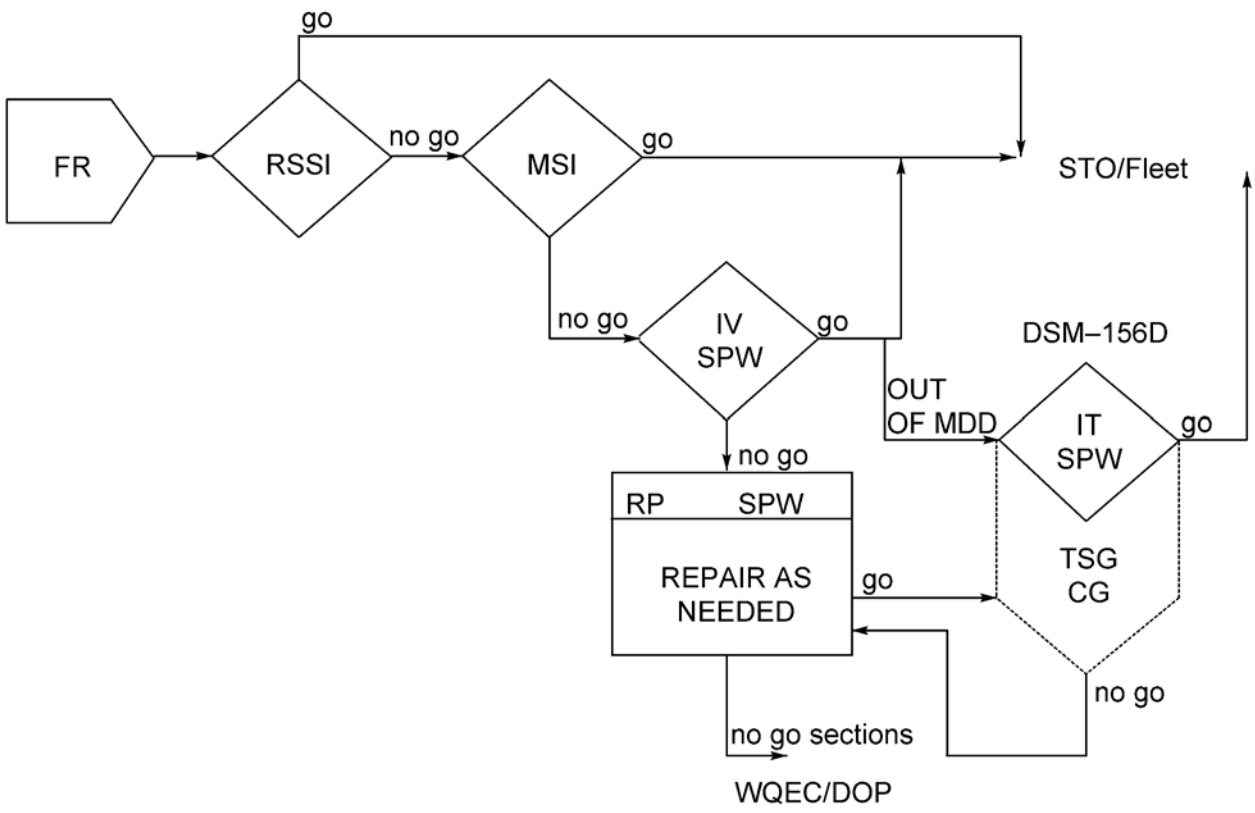

SPARROW LEGEND

CG	Control Group
DOP	Designated Overhaul Point
FR	Fleet Return
IT	Incoming Test of Missile/Section/Component
IV	Incoming Visual Inspection of Missile/Section/Component
MDD	Maintenance Due Date
MSI	Missile Sentencing Inspection
RP	Repair of Section or Component in Place
RSSI	Receipt, Segregation, Storage, and Issue
SPW	SPARROW (Air Launched Tactical Missile)
STO	Storage
TSG	Target Seeker Group (Guidance Section)
WQEC	Weapons Quality Engineering Center

Figure 1-4-2. SPARROW Fleet Return

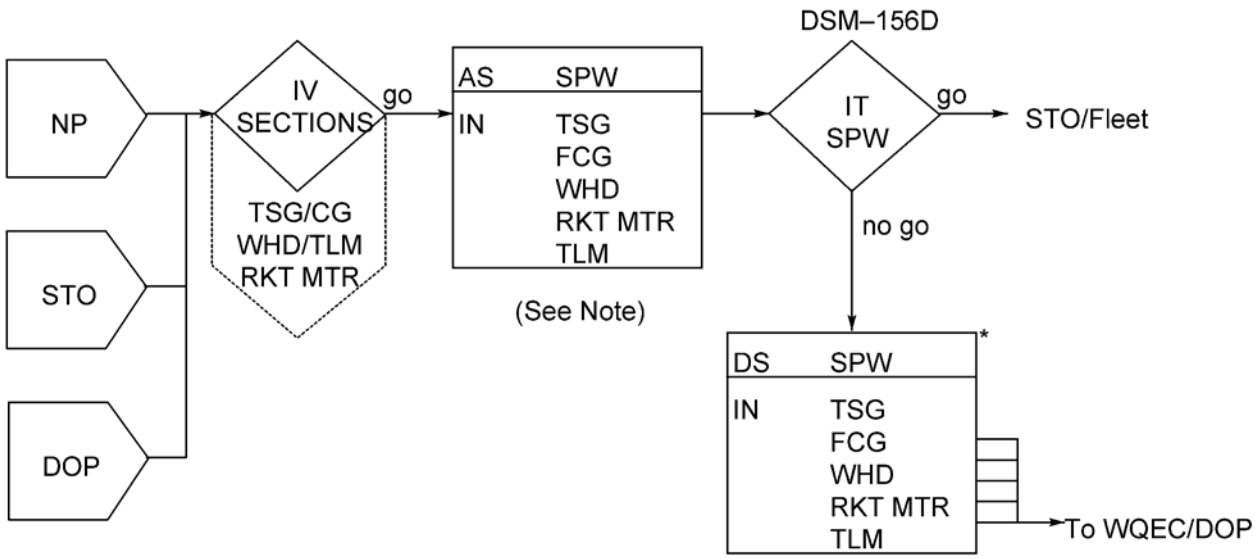

*DS always occurs if leading section is "no go."
NOTE: As not generally reported due to AUR test.

SPARROW LEGEND

AS	Assembly
CG	Control Group
DOP	Designated Overhaul Point
DS	Disassembly (Shore Activity-of-AUR)
FCG	Flight Control Group
IN	Installation of Section or Component
IT	Incoming Test of Missile/Section/Component
IV	Incoming Visual Inspection of Missile/Section/Component
NP	New Production
RKT MTR	Rocket Motor
SPW	SPARROW (Air Launched Tactical Missile)
STO	Storage
TLM	Telemetry System
TSG	Target Seeker Group (Guidance Section)
WHD	Warhead or Warhead Section
WQEC	Weapons Quality Engineering Center

Figure 1-4-3. SPARROW New Production/Repair/Build-up from Sections

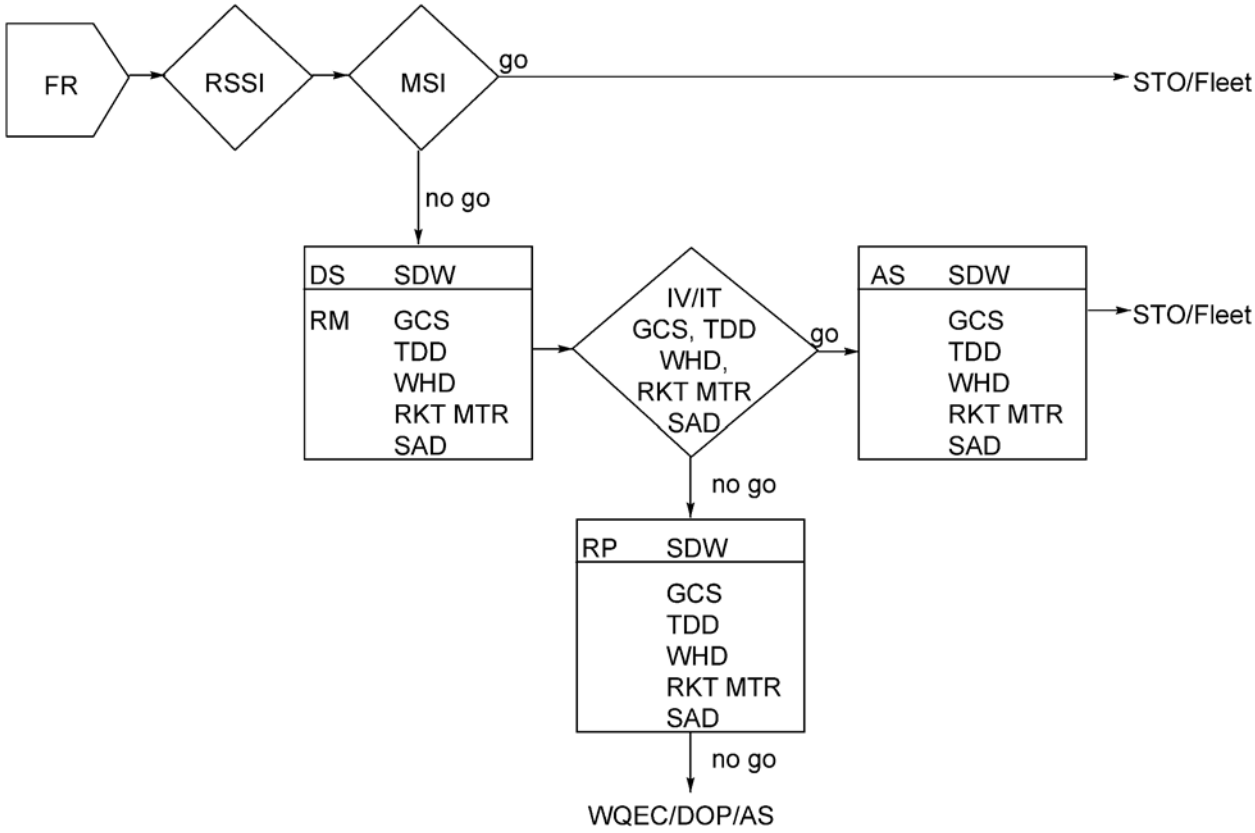

SIDEWINDER LEGEND

AS	Assembly
DOP	Designated Overhaul Point
DS	Disassembly
FR	Fleet Return
GCS	Guidance Control Section
IT	Incoming Test of Missile/Section/Component
IV	Incoming Visual Inspection of Missile/Section/Component
MSI	Missile Sentencing Inspection
RKT MTR	Rocket Motor
RM	Removal of Section or Component
RP	Repair Section
RSSI	Receipt, Segregation, Storage, and Issue
SAD	Safety and Arming Device
SDW	SIDEWINDER (Tactical Weapon)
STO	Storage
TDD	Target Detecting Device
WHD	Warhead or Warhead Section
WQEC	Weapons Quality Engineering Center

Figure 1-4-4. SIDEWINDER AIM-9M Fleet Return

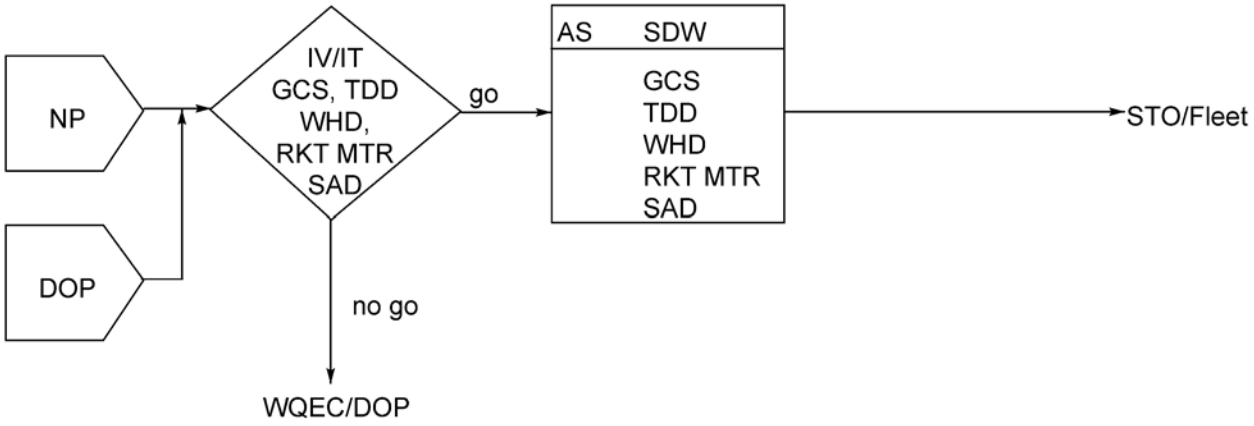

SIDEWINDER LEGEND

AS	Assembly
DOP	Designated Overhaul Point
GCS	Guidance Control Section
IT	Incoming Test of Missile/Section/Component
IV	Incoming Visual Inspection of Missile/Section/Component
NP	New Production
RKT MTR	Rocket Motor
SAD	Safety and Arming Device
SDW	SIDEWINDER (Tactical Weapon)
STO	Storage
TDD	Target Detecting Device
WHD	Warhead or Warhead Section
WQEC	Weapons Quality Engineering Center

Figure 1-4-5. SIDEWINDER AIM-9M New Production/Repair from Sections

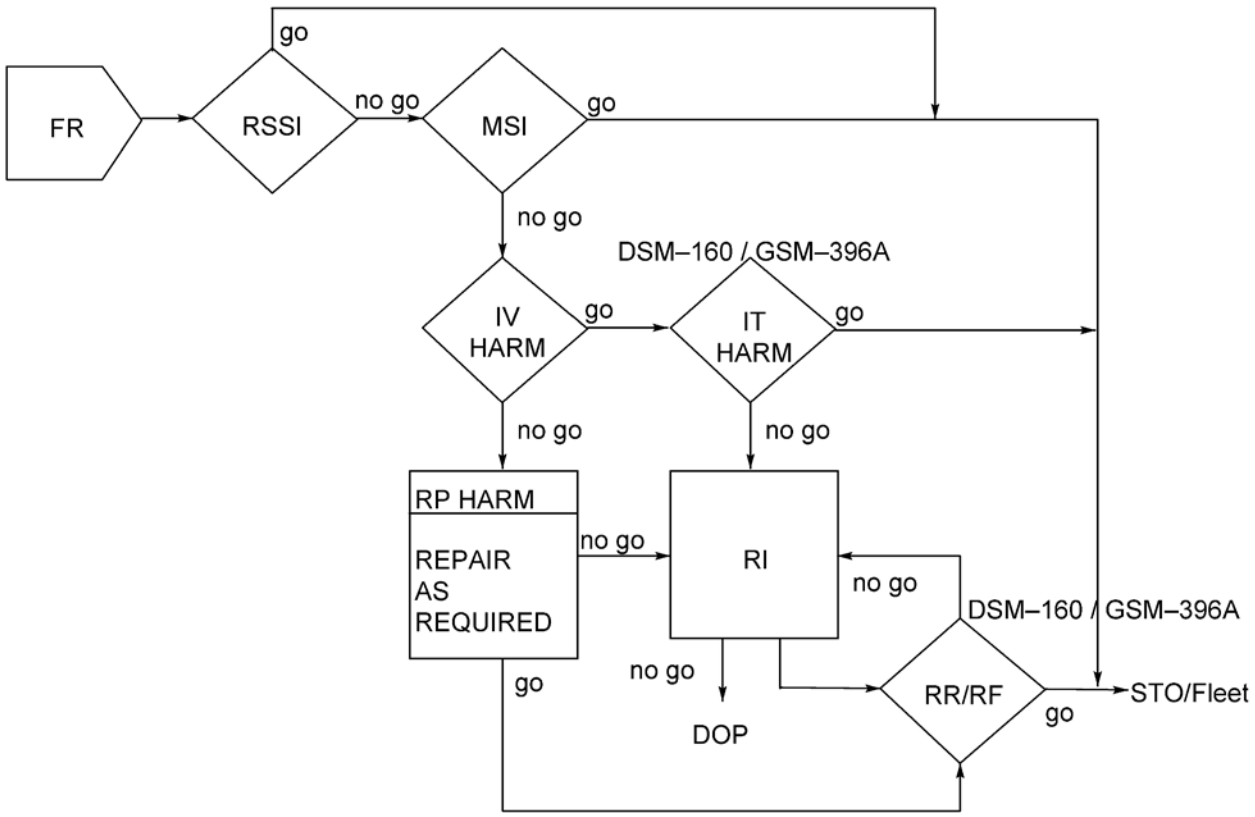

HARM LEGEND

DOP	Designated Overhaul Point
FR	Fleet Return
HARM	HARM (Tactical Missile)
IT	Incoming Test of Missile/Section/Component
IV	Incoming Visual Inspection of Missile/Section/Component
MSI	Missile Sentencing Inspection
RF	Retest After Test Failure
RI	Removal and Installation of Section or Component
RP	Repair of Section or Component in Place
RR	Retest After Remate of Sections
RSSI	Receipt, Segregation, Storage, and Issue
STO	Storage

Figure 1-4-6. HARM Fleet Return

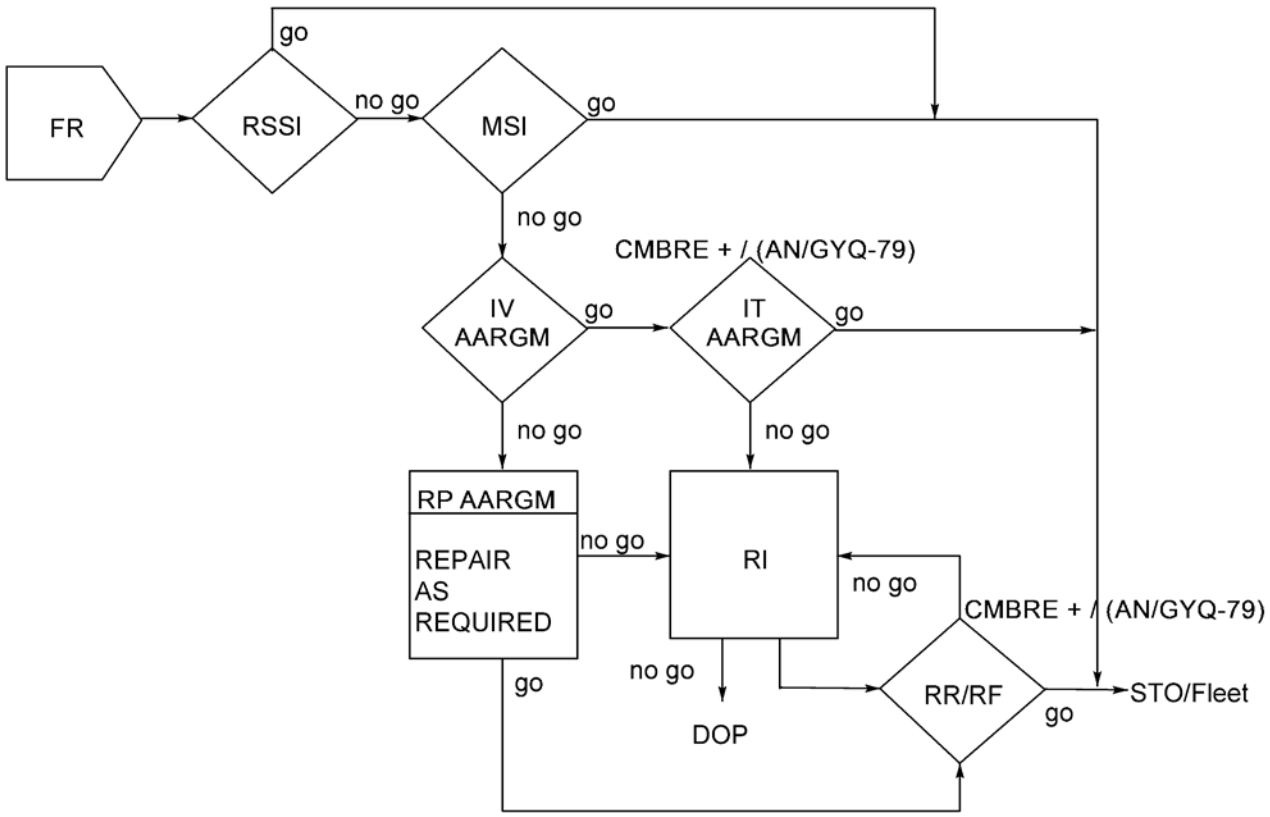

AARGM LEGEND

AARGM	AARGM (Tactical Missile)
DOP	Designated Overhaul Point
FR	Fleet Return
IT	Incoming Test of Missile/Section/Component
IV	Incoming Visual Inspection of Missile/Section/Component
MSI	Missile Sentencing Inspection
RF	Retest After Test Failure
RI	Removal and Installation of Section or Component
RP	Repair of Section or Component in Place
RR	Retest After Remate of Sections
RSSI	Receipt, Segregation, Storage, and Issue
STO	Storage

Figure 1-4-7. AARGM Fleet Return

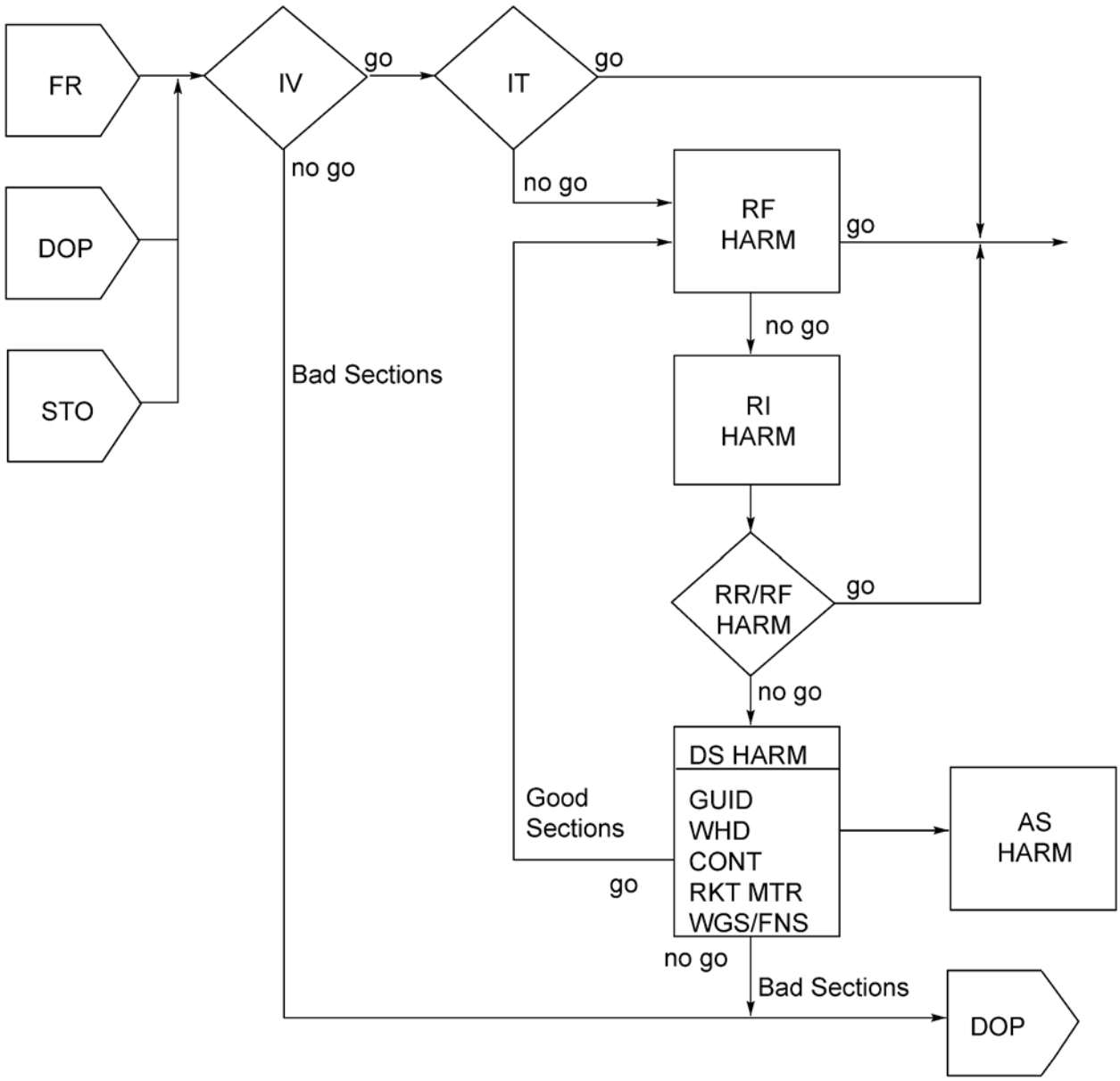

HARM LEGEND

AS	Assembly
CONT	Control
DOP	Designated Overhaul Point
DS	Disassembly (Shore Activity-of-AUR)
FR	Fleet Return
GUID	Guidance Section
HARM	HARM (Tactical Missile)
IT	Incoming Test of Missile/Section/Component
IV	Incoming Visual Inspection of Missile/Section/Component
RF	Retest After Test Failure
RI	Removal and Installation of Section or Component
RKT MTR	Rocket Motor
RR	Retest After Remate of Sections
STO	Storage
WGS/FNS	Wings and Fins
WHD	Warhead or Warhead Section

Figure 1-4-8. HARM New Production/Repair

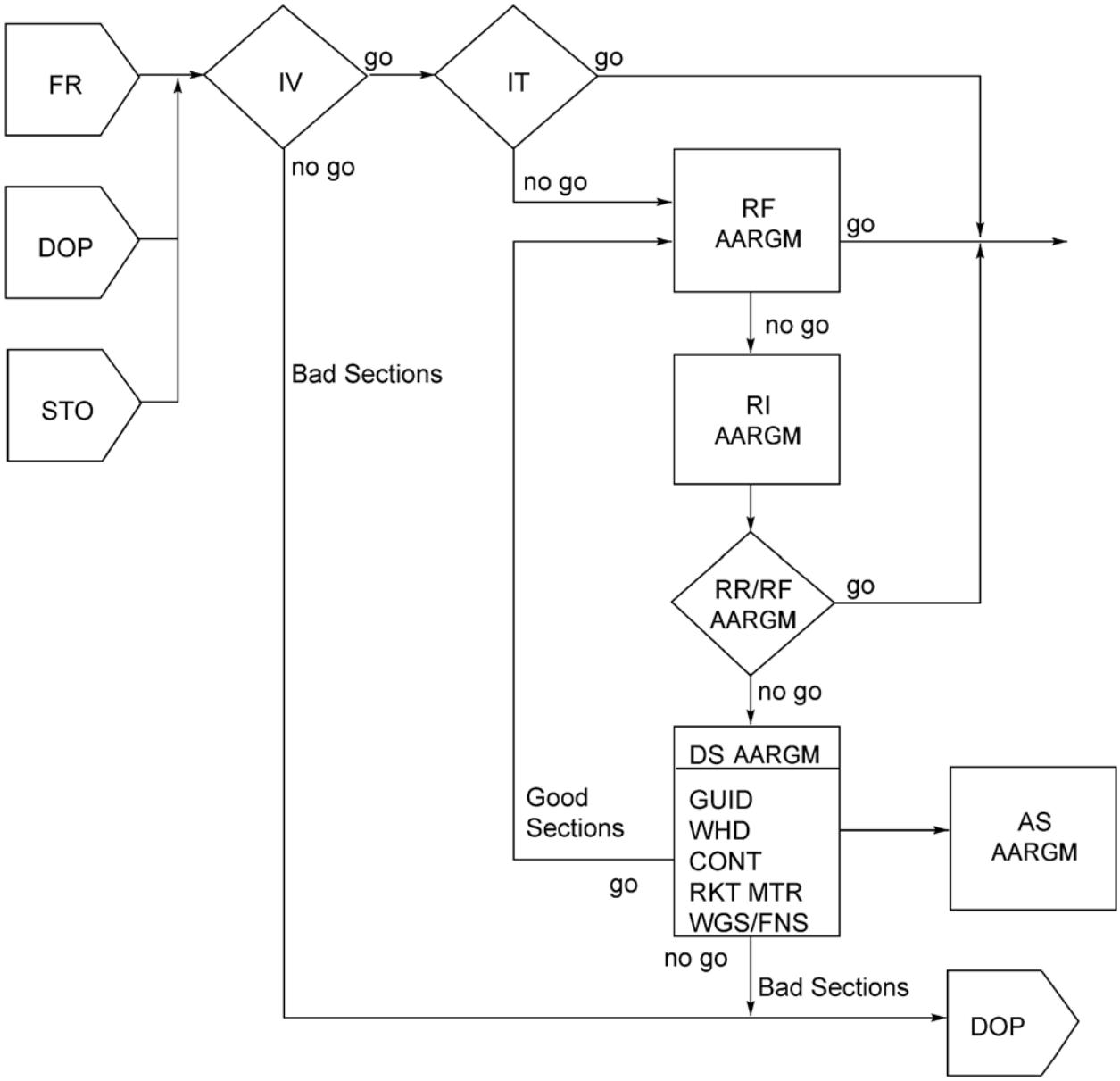

AARGM LEGEND

AARGM	AARGM (Tactical Missile)
AS	Assembly
CONT	Control
DOP	Designated Overhaul Point
DS	Disassembly (Shore Activity-of-AUR)
FR	Fleet Return
GUID	Guidance Section
IT	Incoming Test of Missile/Section/Component
IV	Incoming Visual Inspection of Missile/Section/Component
RF	Retest After Test Failure
RI	Removal and Installation of Section or Component
RKT MTR	Rocket Motor
RR	Retest After Remate of Sections
STO	Storage
WGS/FNS	Wings and Fins
WHD	Warhead or Warhead Section

Figure 1-4-9. AARGM New Production/Repair

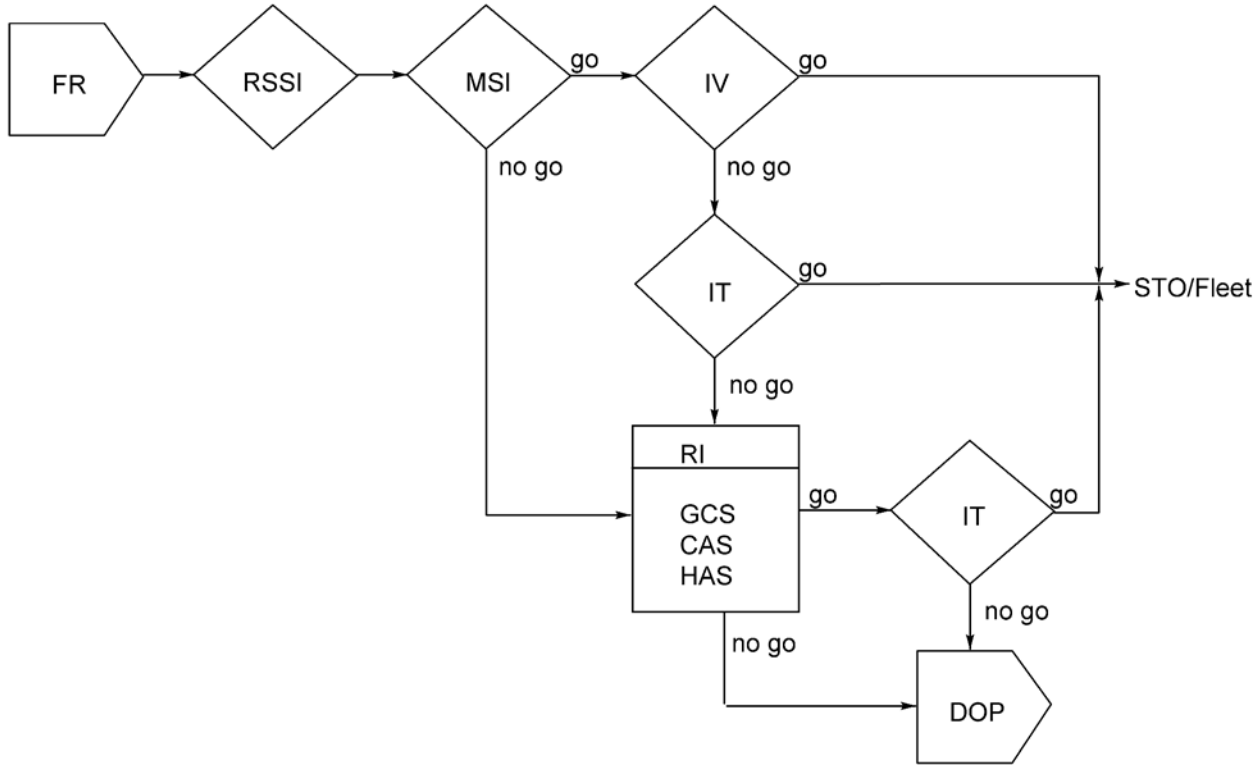

MAVERICK LEGEND

CAS	Center Aft Section
DOP	Designated Overhaul Point
FR	Fleet Return
GCS	Guidance Control Section
HAS	Hydraulic Actuation Section
IT	Incoming Test of Missile/Section/Component
IV	Incoming Visual Inspection of Missile/Section/Component
MSI	Missile Sentencing Inspection
RI	Removal and Installation of Section or Component
RSSI	Receipt, Segregation, Storage, and Issue
STO	Storage

Figure 1-4-10. MAVERICK Fleet Return

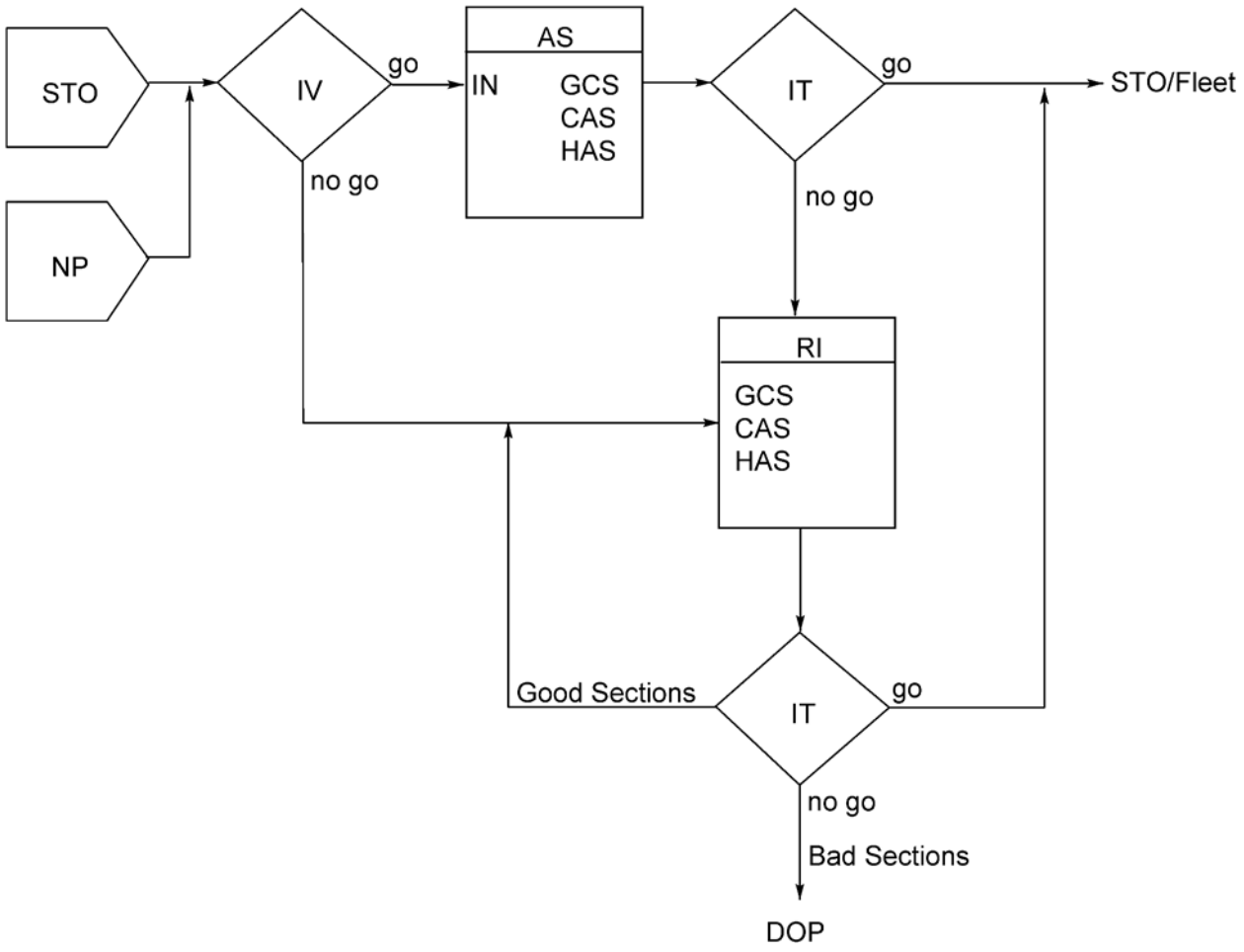

MAVERICK LEGEND

AS	Assembly
CAS	Center Aft Section
DOP	Designated Overhaul Point
GCS	Guidance Control Section
HAS	Hydraulic Actuation Section
IN	Installation of Section or Component
IT	Incoming Test of Missile/Section/Component
IV	Incoming Visual Inspection of Missile/Section/Component
NP	New Production
RI	Removal and Installation of Section or Component
STO	Storage

Figure 1-4-11. MAVERICK New Production/Repair

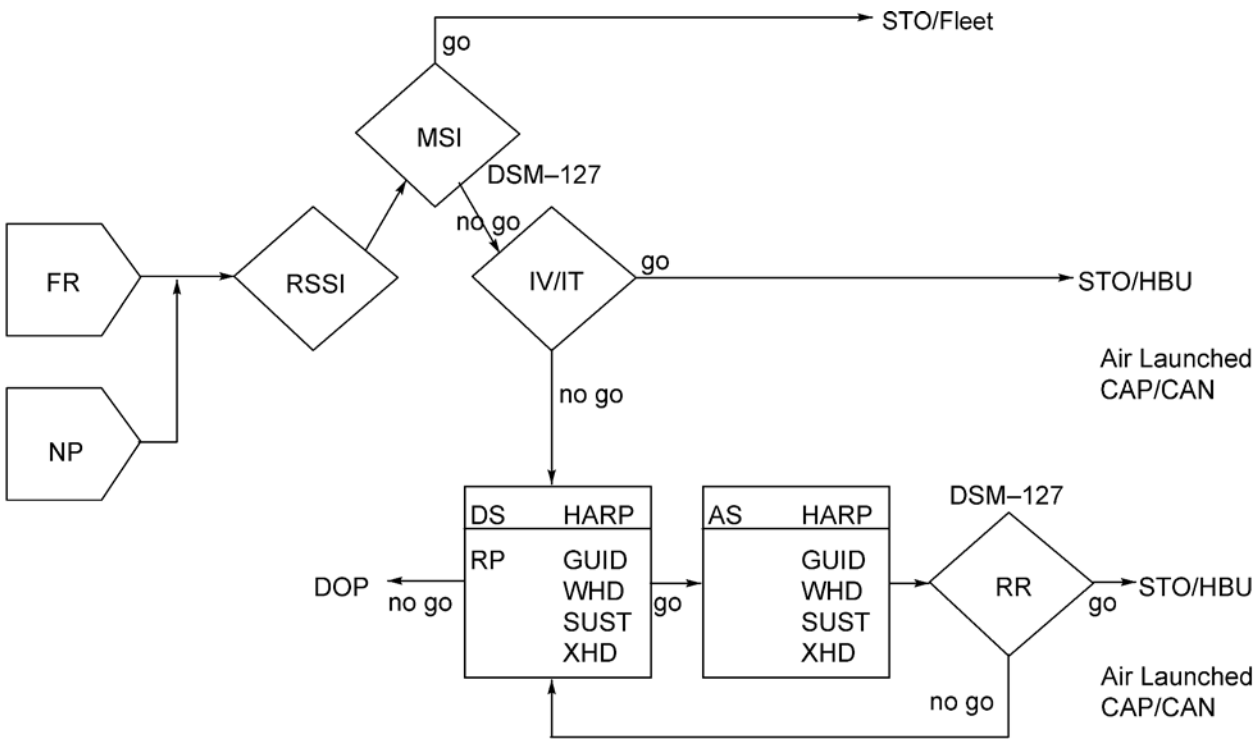

HARPOON LEGEND

AS	Assembly
CAP/CAN	CAP/CAN Tactical Missile
DOP	Designated Overhaul Point
DS	Disassembly
FR	Fleet Return
GUID	Guidance Section
HARP	HARPOON
HBU	Hold for Build-up
IT	Incoming Test of Missile/Section/Component
IV	Incoming Visual Inspection of Missile/Section/Component
MSI	Missile Sentencing Inspection
NP	New Production
RP	Repair
RR	Retest After Remate of Sections
RSSI	Receipt, Segregation, Storage, and Issue
STO	Storage
SUST	Sustainer Section
WHD	Warhead or Warhead Section
XHD	Exercise Head Section

Figure 1-4-12. HARPOON Basic Missile Flow

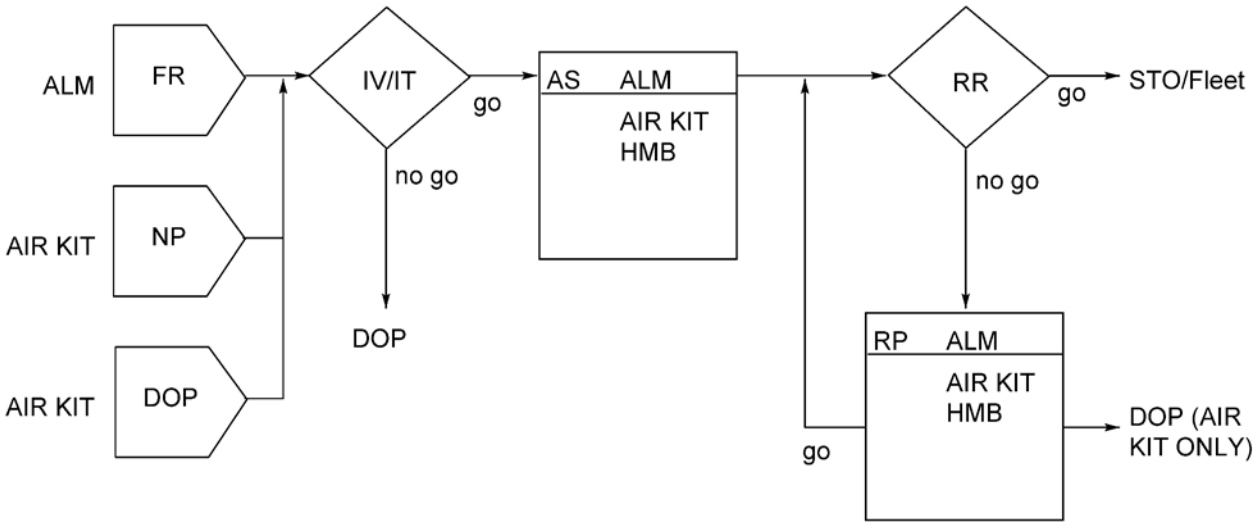

HARPOON LEGEND

AS	Assembly
AIR KIT	Air Launch Kit
ALM	Air Launch Missile
DOP	Designated Overhaul Point
FR	Fleet Return
HMB	HARPOON Missile Body
IT	Incoming Test Missile/Section/Component
IV	Incoming Visual Inspection of Missile/Section/Component
NP	New Production
RP	Repair
RR	Retest After Remate of Sections
STO	Storage

Figure 1-4-13. HARPOON Air Launched Missile Flow

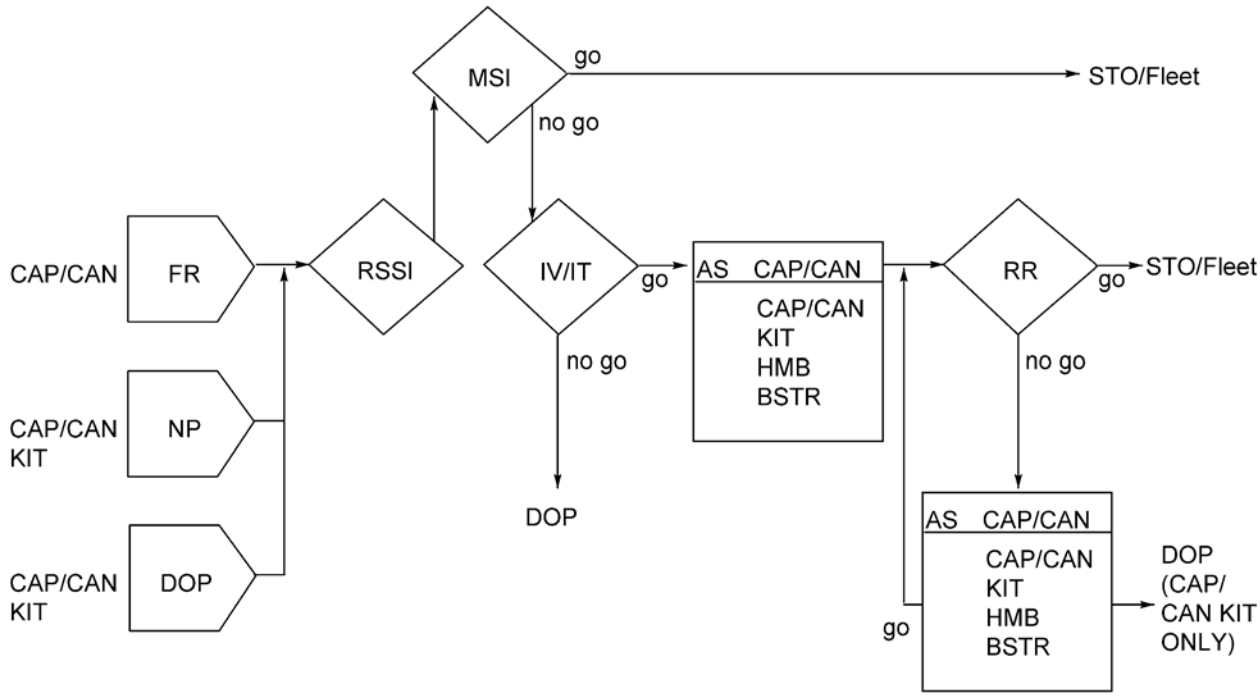

HARPOON LEGEND

AS	Assembly
BSTR	Booster Section
CAP/CAN	CAP/CAN Tactical Missile
CAP/CAN KIT	CAP/CAN Launch Kit
DOP	Designated Overhaul Point
FR	Fleet Return
HMB	HARPOON Missile Body
IT	Incoming Test of Missile/Section/Component
IV	Incoming Visual Inspection of Missile/Section/Component
MSI	Missile Sentencing Inspection
NP	New Production
RR	Retest after Remate of Sections
RSSI	Receipt, Segregation, Storage and Issue
STO	Storage

Figure 1-4-14. HARPOON CAP/CAN Missile Flow

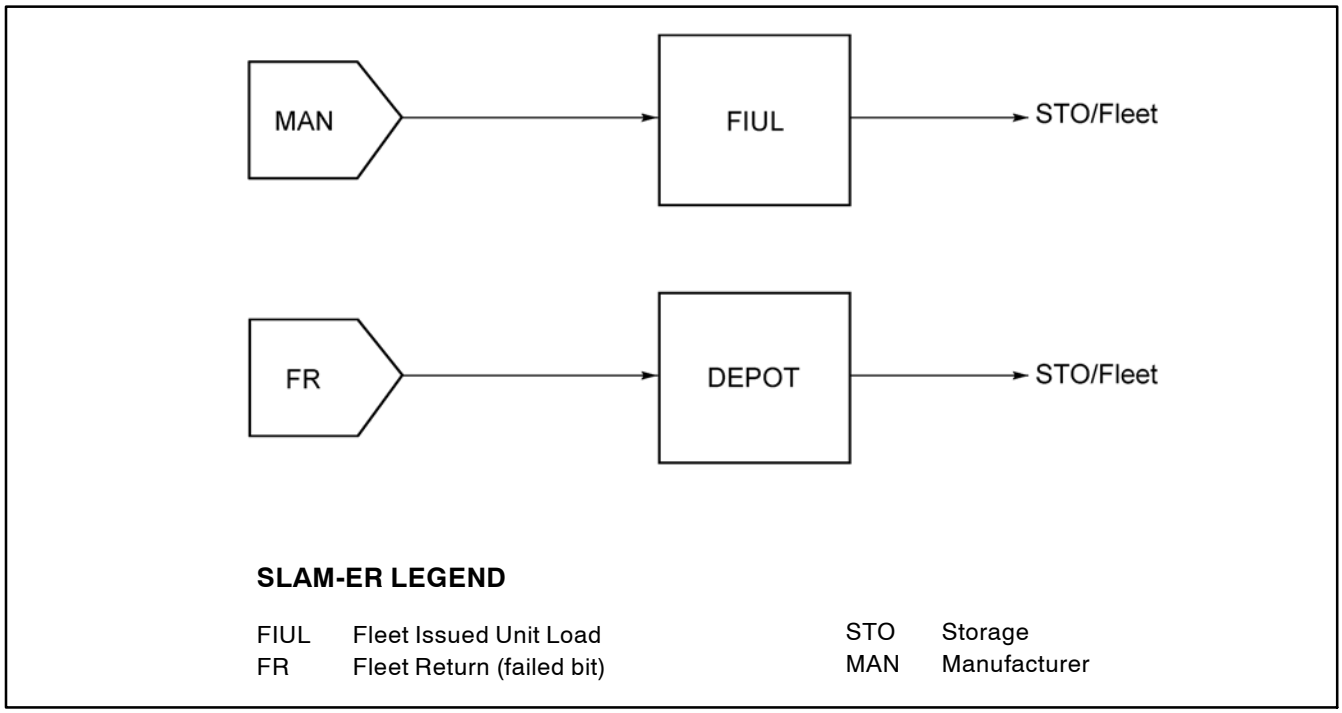

Figure 1-4-15. SLAM-ER New Production/Repair

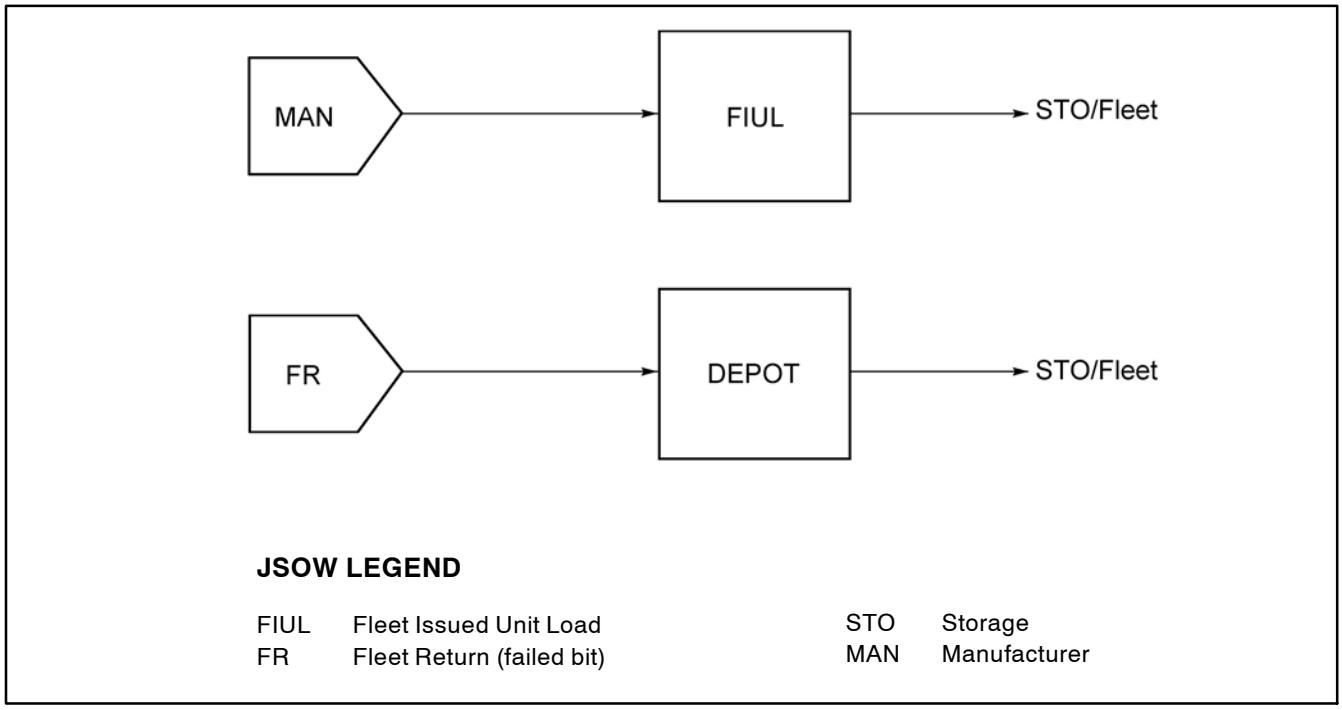

Figure 1-4-16. JSOW New Production/Repair

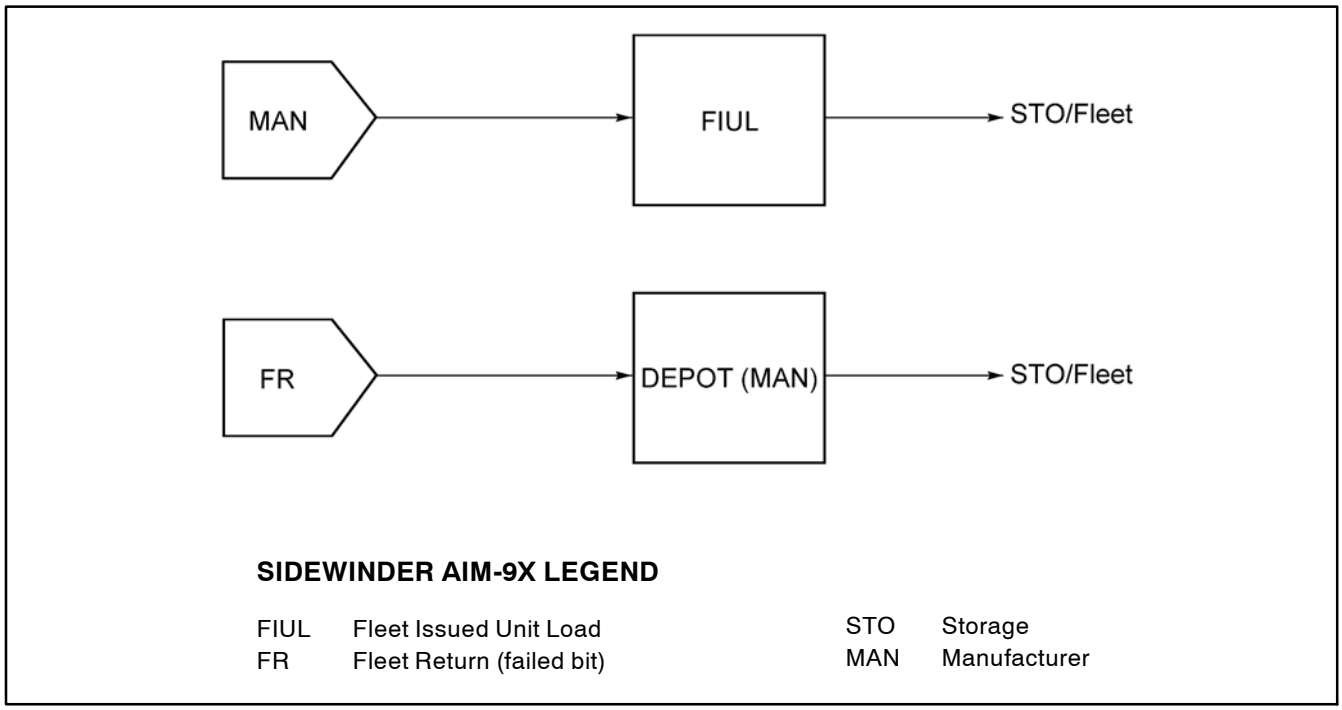

Figure 1-4-17. SIDEWINDER AIM-9X New Production/Repair

painting, and preservation in support of these operations are also authorized (see Paragraph 1.4.6 of this Chapter). Figure 1-4-6 shows the Fleet return process through receipt, storage, segregation, and issue, visual inspection, required repair, section or component removal and installation, testing, and reissue. Figure 1-4-8 shows the new production and repair process from visual inspection, disassembly, testing, repackaging, and issue.

c. AARGM. Maintenance includes the assembly of sections into AUR missiles, testing, fault isolation of Fleet returned AUR missiles, and repair by replacement of faulty sections or components. Wing, fin, and container repair is also included. Required repairs, cleaning and painting, preservation in support of these operations are also authorized (see Paragraph 1.4.6 of this Chapter). Figure 1-4-7 shows the Fleet return process through receipt, storage, segregation and issues, visual inspection, required repair, section or component removal, and installation, testing and reissue. Figure 1-4-9 shows the new production and repair process from visual inspection, disassembly, testing, repacking, and issue.

d. HARPOON. Maintenance consists of scheduled maintenance for all missiles returned for MDD expiration. Except as impacted by the warranty provisions, unscheduled maintenance is performed on all missiles which have been physically damaged, or which fail Built-In-Test (BIT) or missile system test set tests. Required repairs, cleaning, painting, and preservation in support of these operations are also authorized (see Paragraph 1.4.6 of this Chapter). Figure 1-4-12 shows the basic maintenance process for all HARPOON configurations, including both Fleet returned and new production missiles. This figure applies only to WSFs and not NAWMU or Naval Magazines. Figure 1-4-13 depicts the processing flow for installation of HARPOON/SLAM-ER air launch kits from receipt and inspection, assembly, testing, and issue. Figure 1-4-14 shows the HARPOON CAP/CAN missile flow for Fleet return and new production missiles from receipt and inspection, testing, assembly, and issue.

e. HELLFIRE, TOW and MAVERICK missile maintenance requirements for the Fleet at O-level and I-level and at the Weapons Stations are no longer required. Maintenance philosophy for these systems is now O to D. When D-level maintenance is performed the repair data is entered directly into an electronic database. No logbook entries are required. Airborne Weapons Bulletins (AWBs) and Airborne Weapons Changes (AWCs) are reported by compliance direction stipulated in the directive.

f. HELLFIRE. Maintenance consists of AUR missile testing to verify missile section failure. The maintenance philosophy for both versions of HELLFIRE missiles are Organizational to Depot. Missiles failing BIT at the Fleet level will be returned to the Anniston Army Depot for induction into the pipeline under a Depot Maintenance Interservice Support Agreement (DMISA).

g. JSOW. Maintenance consists of AUR BIT and Reprogramming, BIT/Reprogramming is conducted by Fleet personnel or designated teams (as applicable) formed for this specific purpose. Missiles failing BIT are shipped to the designated overhaul point for repair. Figure 1-4-16 shows the maintenance process for Fleet returned assets and new production.

h. MAVERICK. Maintenance includes the visual inspection, cleaning, and touchup painting of external surfaces (see Paragraph 1.4.6 of this Chapter); repair of minor damage to wings and fins; filling of the hydraulic actuation system reservoir; removal and replacement of the dome cover support, actuator cover, dome cover actuator, hatch cover, fuselage door, and hydraulic actuation system; and AUR missile testing. Fault isolation by AUR testing is to the

guidance control section or center aft section. Faulty sections are removed and replaced, and the AUR is tested and recertified. Figure 1-4-10 shows the maintenance process for a Fleet returned missile through receipt, storage, segregation, and issue, visual inspection, integration, and testing. Figure 1-4-11 shows the new production and repair process, including visual inspection, integration, testing, and reissue.

i. SIDEWINDER AIM-9M. Maintenance consists of the inspection, testing, and interchanging of defective missile sections and the replacement of parts. The SIDEWINDER AIM-9M test is at the section level rather than an AUR. Required repairs, cleaning, painting, and preservation in support of interchanging operations are also authorized (see Paragraph 1.4.6 of this Chapter). Figure 1-4-4 shows the maintenance process for a Fleet returned missile from receipt and inspection through the assembly phase. Figure 1-4-5 depicts the missile section processing flow from receipt and inspection, integration, testing, and final issue or disposition.

j. SIDEWINDER (AIM-9X). The AIM-9X D-level maintenance is only authorized at Raytheon Company in Tucson AZ. This level of repair consists of inspection, testing, reprogramming, and repair of Fleet return AUR, NATM, or CATM missiles that fail BIT or reprogramming at the O and I level, as well as for other repair not authorized at the O and I level. Missiles failing BIT or Reprogramming are shipped to Raytheon Company Tucson AZ for repair. See Figure 1-4-1 Assignment of Air Launched Missile System Responsibilities to Navy Munitions Command (NMC) Detachments and NAWMU and Figure 1-4-18, Assignment of Air Launched Missile Responsibilities to Naval Air Warfare Centers, NMC Detachments, Army Depots and Commercial Contractors. NAVAIRSYSCOM manages the warranty for all production lots of AIM-9X. Figure 1-4-17 shows the maintenance process for Fleet return assets and new production.

k. SLAM-ER. Organizational level maintenance consists of visual inspection, upload/download, AUR BIT, replacement of fins, lanyards and/or umbilicals, corrosion control/paint touch-up (see Paragraph 1.4.6 of this Chapter), AUR can/de-can, and return of defective AURs to the D-level (Boeing, St. Charles, MO). Figure 1-4-15, SLAM-ER New Production/Repair, shows the maintenance process for Fleet return assets and new production.

l. SPARROW. Maintenance consists of the inspection, testing, and limited repair of Fleet return missiles and disassembly of failed missile sections and components for processing to designated overhaul points. D-level repairs consist of major section re-mating and external component replacement. Repaired and tested AUR missiles are packaged in AUR missile containers or cradles. Missiles which are received at WSFs or NAWMU with an expired MDD are tested and either reissued or rejected. Required repairs, cleaning, painting, and preservation in support of these operations are also authorized (see Paragraph 1.4.6 of this Chapter). Sections or components of rejected missiles are sent to designated overhaul points. Figure 1-4-2 shows the maintenance process for a Fleet returned missiles. Figure 1-4-3 shows the assembly phase using sections from new production, returns from the designated overhaul point, or sections determined to be satisfactory during WSFs or NAWMU disassembly. Appendix D of this manual provides serviceable in-service times and service life designations.

m. TOW. Maintenance consists of minor repairs to the launch tube. Required repairs, cleaning, painting, and preservation in support of these operations are also authorized (see Paragraph 1.4.6 of this Chapter). TOW missiles damaged beyond the repair capability of Fleet Organizational maintenance will be disposed of by direction of the program office.

Missile/ Weapon	Ford Aero-space	Raytheon Missile Sys. Co. Indianapolis IN	Raytheon Co. Tucson AZ	NMC CONUS West Division Detachment Seal Beach Annex Fallbrook	Letterken-ny Army Depot	Tobyhanna Army Depot	Allegany Ballistics Laboratory Rocket City WV
SPARROW AIM-7M/P			X[1]				
AMRAAM AIM-120			X[1]				
SIDEWINDER AIM-9M						X[4]	
SIDEWINDER AIM-9X			X[6]				
SLAM-ER AGM-84H-1 AGM-84K-1						X[5]	
MAVERICK AGM-65E				X[3]		X[4,5]	
MAVERICK AGM-65F				X[3]		X[4,5]	
HARM AGM-88		X			X		
AARGM AGM-88		X			X		X
JSOW AGM-154A,C,C-1			X				
TOMAHAWK			X				

NOTES:

1. Co-producers of AIM/RIM-7M/P and AIM-9M, AIM-120 assigned designated overhaul point responsibilities for air launched missiles manufactured by their facility.
2. There is no D-level maintenance for the TOW missile. Assets which are beyond capability of maintenance at I-level maintenance are disposed of on-site.
3. AUR and Center Aft Section.
4. Guidance and Control Section.
5. MAVERICK/SLAM-ER Seeker repair.
6. AUR depot for AIM-9X.

Figure 1-4-18. Assignment of Air Launched Missile Responsibilities to Naval Air Warfare Centers, NMC Detachments, Army Depots and Commercial Contractors

Missile/ Weapon	Boeing Aerospace	HELLFIRE Missile Depot Lockheed-Martin Missiles and Electronics
HARPOON AGM-84D-1	X	
SLAM-ER AGM-84H-1 AGM-84K-1	X	
HELLFIRE AGM-114B AGM-114K		X

Figure 1-4-18. Assignment of Air Launched Missile Responsibilities to Naval Air Warfare Centers, NMC Detachments, Army Depots and Commercial Contractors - contd.

1.4.3 Receipt, Segregation, Storage, and Issue. Receipt, segregation, storage, and issue actions required to support maintenance of air launched missiles processing is accomplished in accordance with NAVSUP P-805/807 and Appendix J of this manual.

1.4.4 Missile Sentencing Inspection. The missile sentencing inspection, as described in Chapter 1.1, is a visual external examination of palletized AUR missile and components offloaded from a ship or otherwise returned to a WSFs or NAWMU. The purpose of the missile sentencing inspection is to identify and recertify those assets whose MDD will permit redeployment without further testing. That reduces the quantity of Fleet return AUR missiles, which require maintenance actions to be performed. The process takes maximum advantage of MDD expiration dates, and provides an effective tool for the management of maintenance workloads. The missile sentencing inspection is divided into three phases:

1.4.4.1 Receiving Inspection. WSFs and/or NAWMU conduct a receiving inspection on the containerized AUR missiles listed in Paragraphs 1.4.2.2a through 1.4.2.2m. Containers and cradles are inspected for the presence of seals, correct markings, corrosion, moisture intrusion, damage, and an MDD that will permit reissue without further testing. If all inspection items are acceptable, the missile sentencing inspection is complete and the air launched missile is ready-for-reissue. A container or cradle that is dented, crushed, punctured, or appears to have been tampered with must be opened and its contents must be inspected.

1.4.4.2 In-container Inspection. The in-container inspection verifies the material condition of the AUR missile prior to further sentencing, including MDD. During the inspection, maintenance personnel check the rocket motor safe and arm device for proper positioning and examine the missile skin for scratches, nicks, or gouges. If defects are found, corrective action to be performed is noted for further planning and entered in the missile logbook. When the AUR missile and the container meet the in-container inspection requirements, the AUR missile is repackaged, sealed, and is ready-for-reissue. If a defect is found which cannot be corrected through the missile sentencing inspection process, the missile and container are sentenced to the repair process for repair and recertification.

1.4.4.3 Repackaging. During the missile sentencing inspection, serviceable AUR missiles are repackaged as necessary to remove any unserviceable AUR missiles which may have been included. AUR missiles with the same or similar MDDs are containerized together (depending on system) to take maximum advantage of the MDD and to provide for economical management of the workload and assets. The desiccant, humidity indicator, and packaging material are replaced as necessary. Re-stenciling and retagging operations are performed and the assets are then sealed. Repackaging operations shall be in accordance with the appropriate technical manuals and NAVAIR 01-1A-75 (see Paragraph 1.4.6 of this chapter). Missile sentencing inspection work content definitions and procedures for inspecting and sentencing air launched missiles are contained in the NAVSUP P-806/807

1.4.5 Material Received for Further Transfer. Containerized AUR air launched missiles and sections or components, properly stenciled and tagged, sent to a WSFs or NAWMU for further transfer to another activity need not be inspected by the Weapon Station or NMC Detachment except for safety considerations prior to temporary storage. If, during that inspection, it is determined that maintenance actions are required on the container to assure safe and protected transfer of the material, the missile must be repackaged in an authorized, undamaged container in accordance with approved technical manuals.

1.4.6 Corrosion Control and Lubrication.

1.4.6.1 Cleaning consists of the removal of contaminants such as dirt, grease, salt spray, oil, and other elements that aid corrosion. Cleaning requires knowledge of the materials and methods needed to remove each of these contaminants. As a general rule, the mildest cleaning method available that will work effectively is used. NAVAIR 01-1A-75 addresses the authorized materials, applications, and procedures for preventive and corrective cleaning and corrosion control measures for air launched missiles. Specifically, NAVAIR 01-1A-75 addresses the procedures to be followed for each type of substrate (metallic and non-metallic) to be cleaned, as well as the proper material to be used. See Volume I, Section 4, for further detail.

1.4.6.2 Painting at WSFs or NAWMU is limited to the touchup of areas which have been damaged by abrasion, superficial scratches, or in areas where the paint was removed in order to treat corrosion. Touchup painting is limited to a maximum of 25 percent of any section or component unless specifically instructed by technical manual instructions. Painting that exceeds touchup must be performed in an authorized painting area (usually an enclosed paint booth). Maintenance personnel will clean all surfaces before applying the paint coating, ensuring that no cleaning material residue is trapped in fasteners, points, etc.; such areas can become contaminated easily and corrosion will occur. While material such as oils and sealants act as a preservative, painting is generally the most effective means of preserving metal. NAVAIR 01-1A-75 lists the cleaning materials, primers, and paints used in the preservation and corrosion control of air launched missiles. See Volume I, Section 4, for further detail.

1.4.6.3 Marking. Weapons repair facility personnel re-stencil all markings obliterated or removed during repair or painting in accordance with the applicable authorized technical manual and NAVAIR 01-1A-75.

1.4.6.4 Preservation. Corrosion preventive compounds, adhesives, and sealants shall be applied only when inspection results warrant and during maintenance procedures when replacement parts require it. Corrosion preventive compounds, adhesives, and sealants are applied using approved materials and methods listed in accordance with the applicable authorized technical manuals and NAVAIR 01-1A-75.

1.4.6.5 Lubrication. Weapons repair facility personnel perform lubrication in accordance with the applicable authorized technical manual using the lubricants authorized in NAVAIR 01-1A-75.

1.4.7 All-Up-Round (AUR) Missile and Section Testing and Test Equipment Certification. WSFs or NAWMU perform electrical tests on AUR missiles or missile sections and components to verify compliance with test specification parameters. Testing is accomplished on Commander, Naval Air Systems Command (COMNAVAIRSYSCOM) authorized and certified air launched missile test equipment. All testing is performed in accordance with the applicable technical manual. Additionally, under acquisition reform and new maintenance initiatives, AUR missiles testing performed at both Army and contractor facilities. The test equipment used may or may not be required to be certified under existing COMNAVAIRSYSCOM directives.

1.4.8 Failure Verification. Since air launched missiles that fail the electrical test are temporarily lost from the Fleet inventory, decrease asset readiness, and incur costly repairs, every attempt is made to verify faulty air launched missile sections that appear to be beyond the capability of maintenance prior to shipment to the designated overhaul point. Weapons quality

engineering activities listed in Figures 1-1-4 through 1-1-14 of this Volume, perform sample verification testing on assigned systems. Failures that occur on air launched missile systems for which weapons quality engineering centers have no current capability will be verified by retesting as follows:

a. The failure will be verified on an alternate test set before being shipped to the designated overhaul point.

b. On air launched missile systems where the activity has only a single test set for that system, the failed air launched missile will be completely disconnected, all test connectors and interfaces will be reconnected, and retest of the air launched missile will be performed.

1.4.9 Removal and Replacement of Missile Sections. Missile sections or components that are removed from an AUR as a result of inspection, testing, or troubleshooting are replaced by a serviceable section drawn from stock or, in some cases, gained by a maintenance action on another AUR. The faulty section or component is then set aside for further screening to reduce the number of fault units entering the depot pipeline. Interchangeability of missile sections or components will be in accordance with the applicable technical manual. When the missile configuration is changed by the addition or deletion of a section or component, the appropriate logbook's maintenance data system configuration summary form must also be annotated. Separate forms apply to each missile system. Appendix A, of this manual, contains examples of each of these forms and also provides instructions for completing the forms.

1.4.10 Deficiency Reporting. Deficiency reports are initiated when a deficiency is discovered during the performance of any of the assigned maintenance actions. Deficiency reporting procedures are contained in Volume I, Chapter 4.6, of this manual.

1.4.11 Warranty Actions. The COMNAVAIRSYSCOM warranty program is discussed in detail in Volume I, Chapter 4.3, of this manual. In the event that a deficiency is discovered during the processing of new or newly reworked material, or material that is under warranty, and that deficiency is not a result of maintenance handling or processing, the item shall be considered to be in breach of warranty provisions of the contract and is therefore subject to the provisions of the warranty. Warranty claim actions shall be handled as follows:

a. A Product Quality Deficiency Report (PQDR) form (SF 368) will be used to process warranty claim actions. The SF 368 will be clearly marked "Warranty Claim Action" and will include the following (in addition to information required in Volume I, Chapter 4.6):

(1) Date of failure (Block 4).

(2) Item serial number (Block 9).

(3) Production contract number (Block 10).

(4) Warranty expiration date (Block 22).

(5) Detailed circumstances leading to discovery of the failure (Block 22).

b. In addition to normal distribution, a copy of the completed PQDR and logbook/section will be placed in the container with the failed item and the item will be returned to the vendor for repair under the warranty provisions of the contract.

c. A copy of the PQDR will be sent to the cognizant Assistant Program Manager, Logistics (APML) responsible for that item.

1.4.12 Organic Depot and Commercial Contractor Maintenance.

1.4.12.4 D-level maintenance responsibilities assigned to organic depots and commercial contractors include those actions required to maintain or restore the inherent design service levels of performance, reliability, and material condition. D-level maintenance covers the complete rebuilding through reclamation, refurbishment, overhaul, repair, replacement, adjustment, servicing, and replacement of consumables. Figure 1-4-18 assigns the Naval Air Warfare Centers, NMC Detachments, Army Depots, and Commercial Contractors responsible for D-level maintenance of the primary component, the guidance and control section. In some instances complete AUR missiles are returned to the FRC or contractor and in others only the failed section is returned.

1.4.12.5 Naval Air Warfare Centers, NMC Detachments, Army depots and commercial contractors are also responsible for all modification actions required to change or improve design levels of performance, reliability, and material. The term modification, as used in this manual, includes alteration, conversion, engineering change, modernization, etc. All D-level maintenance actions are performed in accordance with the applicable technical manual. Specific maintenance actions assigned to FRCs and commercial contractors include the following:

a. All maintenance and modification actions necessary for the rework and repair of the air launched missile sections and components under their cognizance.

b. The manufacture of items and component parts otherwise not available when that action is deemed necessary and is appropriately authorized.

c. The provision of support services functions, including professional engineering, technology, and calibration services, and field teams to support lower level maintenance when required and directed.

1.4.13 Technical Directives. D-level personnel are responsible for assuring that Technical Directives (TDs), Airborne Weapon Changes (AWCs), Airborne Weapon Bulletins (AWBs), and Notice of Ammunition Reclassifications (NARs) are complied with. They also assist in the development and verification of TDs that ultimately affect them. This assistance includes engineering change proposal review, development of the resulting TD, and verification prior to implementation of the TD.

1.4.14 Logbook Maintenance.

1.4.14.5 Maintenance activities, whether organic or commercial, are responsible for air launched missile logbook entries whenever any of the following maintenance actions are performed:

a. Modification of the air launched missile has been accomplished.

b. TDs such as AWBs and AWCs have been incorporated.

c. Maintenance has been performed.

d. Air launched missile testing has been accomplished.

e. Shipping or receiving transactions occur.

f. An age limited or discrepant component has been replaced.

g. Any configuration change is made to the air launched missile.

h. When the MDD marked on the container conflicts with the logbook MDD, the container markings take precedence. The logbook should be changed to reflect the more current MDD on the container at the first available opportunity that does not create additional workload to remove the logbook.

1.4.14.6 Permanent files, updated periodically by maintenance data system input, are maintained for each air launched missile. Upon expenditure of the air launched missile, the logbook will be destroyed by the Intermediate maintenance activity, Weapons Department/NMC or D-level facility in a manner to prevent reconstruction of its contents. In the event the missile is the subject of a deficiency report, i.e. Conventional Ordnance Deficiency Report (CODR), Explosive Mishap Report (EMR), the logbook will be retained until closing action is completed and the Fleet Support Team (FST) determines the logbook is not required. Activities receiving incomplete or missing air launched missile logs and records should contact the originating WSFs or NAWMU for the logbook, initiate a PQDR, and then contact the last user by message for the latest update or logbook replacement. If last user is unable to locate the logbook, contact the Naval Air Warfare Center Weapons Division, Code 684200E.

1.4.15 Record Keeping and Reporting.

1.4.15.1 D-level maintenance is responsible for all record keeping and reporting actions related to the processing of air launched missiles. That includes logbook entries, Ordnance Information System (OIS) reporting requirements, local applicable directives, and maintenance data system reporting and other management information and status report(s) as required by the individual missile program offices. The maintenance data system and OIS are described in Volume I, Section 5, of this manual.

1.4.15.2 Reportable maintenance actions performed on air launched missiles must be entered into the maintenance data system. Maintenance actions are reported on OPNAV 8600/11 (maintenance data system for air launched missile systems). Air launched missile configuration information is reported on the applicable maintenance data system configuration summary forms located in Appendix A of this manual, contains procedures and instructions for the completion of these forms. Maintenance actions which require report submission include all tests, inspections, repairs, and remote actions performed on air launched missiles, sections, and components. Report the following:

a. Assembly of a missile.

b. Disassembly of a missile.

c. Replacement of a component, section, sub-assembly, or major subassembly be it non-explosive or explosive.

d. Performance of all tests (mechanical and electrical), inspections and repairs, including test variables data for each test parameter measured for selected depots and missile systems.

e. Performance of all of TDs. (This includes AWCs, AWBs, and NARs.)

1.4.15.3 Reporting disassembly or remate actions caused or required by replacement of a component, section, subassembly, or major subassembly is not required unless specified by other authorized sources.

1.4.15.4 Airborne Software Changes (ASCs). Inherent in the technology of today's weapons systems is the ability to change the software associated with operation of those systems. It is critical for operational mission success that the directed current software version is loaded, and applicable weapons tracking information systems reflect current status for each cataloged weapon. The following is the minimum procedures to provide policy for marking, annotation, and tracking of weapon ASCs:

a. Naval Air Systems Command (NAVAIRSYSCOM) issue ASC for the applicable weapon system.

b. Tiger teams and/or Fleet weapons personnel will reprogram applicable inventory.

c. Cognizant personnel will annotate completion of reprogramming effort in the weapons logbook unless through container reprogramming precludes the action.

d. Cognizant personnel will annotate completion of reprogramming effort on the weapon container material condition code tag.

e. Cognizant personnel will ensure reprogramming action is recorded in the All Weapons Information System (AWIS).

1.4.15.5 All D-level maintenance activities are responsible for updating the data contained in OIS. Section status reporting to OIS for FRCs is via transaction item reporting, Ammunition Transaction Reports (ATRs), and the SLITS, while commercial contractors report via naval message format. OIS is updated via transaction item reporting and the SLIT whenever there is any change in the configuration of an air launched missile.

SECTION 2

Airborne Ordnance/Ammunition

Table of Contents

Chapter	Subject	Page
2.1	Introduction	2-1-1
2.2	Organizational Level Maintenance	2-2-1
2.3	Intermediate Level Maintenance	2-3-1
2.4	Depot Level Maintenance	2-4-1

CHAPTER 2.1

Introduction

Table of Contents

Paragraph	Subject	Page
2.1.1	General	2-1-1
2.1.2	Responsibilities	2-1-1
2.1.3	Applicability	2-1-1
2.1.4	Bombs and Associated Components	2-1-1
2.1.5	Aircraft Gun Ammunition	2-1-7
2.1.6	Cartridges and Cartridge Actuated Devices	2-1-7
2.1.7	Aircraft Rockets, Rocket Launchers, and Jet/Rocket Assisted Takeoff Rocket Motors	2-1-7
2.1.8	Propellant Actuated Devices	2-1-10
2.1.9	Pyrotechnic, Screening, and Marking Devices	2-1-10
2.1.10	Airborne Electronic Warfare Expendable Countermeasures	2-1-11
2.1.11	Underwater Acoustic Devices	2-1-11
2.1.12	Sonobuoy	2-1-11
2.1.13	Maintenance Philosophy	2-1-11
2.1.14	Conventional Ordnance Performance Evaluation (COPE)	2-1-12
2.1.15	Ordnance and Ammunition Logistics	2-1-12
2.1.16	Ordnance Information System (OIS)	2-1-12

CHAPTER 2.1

Introduction

2.1.1 General. This section addresses maintenance program management of air delivered ordnance and ammunition. During a weapon system's life cycle phase, maintenance program management is a critical management function due to the impact of maintenance requirements on the effective use of personnel, materials, facilities, and fiscal resources. Maintenance program management functions include maintenance planning, coordinating, budgeting, and evaluating program progress. Each specific category of ordnance and ammunition is assigned a two-digit Navy stock number prefix that identifies technical and inventory management responsibilities. Conventional expendable airborne ordnance is assigned cognizance code 2E and is under the technical cognizance of the Commander, Naval Air Systems Command (COMNAVAIRSYSCOM). Inventory management responsibilities are assigned to the Naval Supply Systems Command Global Logistics Support (NAVSUP GLS AMMO).

2.1.2 Responsibilities.

2.1.2.1 The Assistant Commander, Logistics and Fleet Support, through the Airborne Weapons Logistics Division, is responsible for the program management and funding of airborne weapons maintenance programs. COMNAVAIRSYSCOM is responsible for management, integrated logistics support, and maintenance engineering functions pertinent to airborne weapons systems under COMNAVAIRSYSCOM cognizance.

2.1.2.2 Assistant Program Managers, Logistics (APML) plan and implement integrated logistics support and project support management activities for major weapons systems. APMLs are directly responsible to weapons system Program Managers (PM), for the logistics aspects of acquisition programs from inception through deployment and eventual phaseout from the active inventory.

2.1.2.3 Volume II, Chapters 2.2, 2.3, and 2.4 describe organizational, intermediate, and depot level maintenance actions that apply to airborne ordnance and ammunition.

2.1.3 Applicability. Paragraphs 2.1.4 through 2.1.4.16 describe the airborne ordnance and ammunition assigned 2E cognizance. A brief overview of each munitions family is provided, including their intended operational uses.

2.1.4 Bombs and Associated Components. The general category of bombs includes, general purpose bombs/special purpose bombs, cluster bombs, fire bombs, Buided Bomb Units (GBUs), Global Positioning System (GPS)/Inertial Navigation System (INS) guided bombs, practice bombs, and associated components, such as mechanical and electrical fuzes, Target Detecting Devices (TDDs), boosters, igniters, and fins.

2.1.4.1 MK 80 series Low Drag General Purpose (LDGP) bombs are used in the majority of bombing operations where maximum blast and explosive effects are desired. LDGP bombs are designed to be aerodynamically streamlined. Their cases are relatively light and approximately

45 percent of their complete weight is explosive. General purpose bombs may use both nose and tail fuzes and conical or retarded tail fins. Some are thermally protected for use on aircraft carriers. The thermally protected MK 80 series bomb was developed to increase the cook-off time and decrease the reaction of bombs when engulfed in a fuel fire. The BLU-110, BLU-111, and BLU-117 series thermally protected bombs are identical to the MK 82, MK 83, and MK 84 thermally protected bombs, respectively, with the exception of the explosive filler. The MK 82, MK 83, and MK 84 LDGP bombs underwent a Product Improvement Initiative (PII) which entailed filling the bomb cases with a less sensitive explosive. When filled, the MK 82, MK 83, and MK 84 bombs are redesignated BLU-110, BLU-111, and BLU-117 series, respectively. Weapons Assembly Manual show the different configurations for MK 80 series and BLU series LDGP bombs. The BLU series bomb bodies use PBXN-109 as explosive filler with the exception of BLU-129/B which uses MNX-1282. The BLU-109A/B, BLU-116A/B used with the GBU-24 series and GBU-31(V)4/B, is a special purpose bomb comprised of steel alloy used for hardened targets. The BLU-126/B is a low collateral damage (LOCO) 500 pound GP bomb loaded with approximately 28 pounds of PBXN-109 and 85 percent inert filler. The BLU-126/B is identified by three-2 inch wide bands and a fourth-3 inch wide band 12 inches from the rear of the bomb. The BLU-129/B is a very low collateral damage (VLCD) 500 pound GP bomb loaded with approximately 307 pounds of MNX-1282. The bomb body is made from carbon fiber composite to reduce fragmentation. The BLU-129/B has no thermal coating as the carbon fiber composite case provides the fire safety levels required for shipboard use. The nose fuze cavity surrounding the fuze well is filled with inert fill (tungsten) to further reduce fragmentation; because of this, the nose fuse well is non-functional, limiting the BLU-129/B to tail fuzing only.

2.1.4.2 Cluster bombs are dispensers which contain a number of bomblets for use against armored vehicles, light materials, personnel, or small craft. As the weapon travels along its trajectory, a fuze functions at a predetermined height/time relative to the target and the bomblets are released to free-fall to the target area. These bomblets detonate on impact, after a preset time delay, or when disturbed. Cluster bombs presently in the Navy inventory are the MK 20 series, CBU-99, and CBU-100 series ROCKEYE. SUU-76C/B Dispenser Bomb, the SUU-76C/B Dispenser configuration is a CBU-100/B with the anti-tank bomblets removed and payload sleeve installed. When the payload sleeve is configured with leaflets and reloaded into the dispenser, the All-Up-Round (AUR) becomes a PDU-5/B Leaflet Dispenser. The SUU-76C/B-PDU-5/B is easily identified by a 8 inch “X” on both sides.

2.1.4.3 The MK 77 series fire bomb is a 500 pound thin skinned container of fuel gel designed for use against dug-in troops, supply installations, wooden structures, and land convoys. Fire bombs rupture on impact and spread burning fuel gel on surrounding objects. MK 13 Mod 0 igniters are used to ignite the fuel gel mixture upon impact.

2.1.4.4 Guided Bomb Unit (GBU) are general purpose bombs modified to utilize a laser guidance system. GBUs are capable of detecting and homing on a target illuminated by a laser beam. GBU-10/12/16 series are modified LDGP MK 80 series bombs. GBU-12F/B and GBU-52/B are Dual Mode Laser Guided Bomb (DMLGB) which provides the destruction of designated targets with greater accuracy then a laser guided bomb. The guidance and control section (GCS) provides for GPS-aided Inertial Navigation Systems as well as laser guidance. The weapon is guided to the target by laser energy reflected from the target or GPS/INS

guidance. GBU-24 series are modified special purpose bomb (BLU-109A/B and BLU-116A/B) for use against hardened targets. These modifications are accomplished by mounting a laser guidance kit to the bomb body. The kit consists of a computer control group which attaches to the nose of the bomb and detects an illuminated target providing guidance information to the movable guidance fins to control the trajectory of the weapon, and an airfoil group (wing assembly and guidance fins). Guided bomb units are used to strike specific targets where extreme accuracy is required, such as tanks, bridges, etc. Airborne Weapons Assembly Manual NAVAIR 11-140-10 lists guided bomb configurations.

2.1.4.4.1 The Joint Direct Attack Munition (JDAM) is a series of accurate adverse weather guided tail kits (guidance sets) used on current general and special purpose bombs in conventional strike environments. The guidance sets for these weapons are used with the MK 82, MK 83, MK 84, BLU-109, BLU-110, BLU-111, BLU-117 and BLU-126 general and special purpose bombs combined with appropriate fuzes to provide accurate conventional strike capability from very low to very high altitudes. The GBU-31, GBU-32 and GBU-38 munitions use a GPS aided INS to guide the weapon to a pre-planned set of target location coordinates while achieving planned terminal impact parameters such as impact angle and azimuth. Weapon maneuverability and range are enhanced by fixed aerodynamic surfaces (mid-body strakes) attached to the bomb body. Mission plans are loaded to the host aircraft prior to take off and include release envelope, target coordinates and weapon terminal parameters. The weapon automatically begins its initialization process during captive carry when power is applied by the aircraft. The weapon performs BIT, and aligns its INS with the host aircraft's system. Targeting data is automatically downloaded to the weapon from the host aircraft. When the host aircraft reaches the release point within the Launch Acceptable Region (LAR), the weapon is released. Laser JDAM, GBU-54, sensor acquires and tracks a laser illuminated target. Once power is applied, the sensor will perform a Power-up Built In Test (PBIT) and automatically transition to the ready state. Once in the ready state, the sensor processes energy received to facilitate the acquisition of the laser pulse corresponding to the laser code range preselected with the laser code selection switches. At weapon launch, the KMU-572 guidance set commands the sensor into the operate state. If a laser pulse has been acquired, the sensor will transmit Line of Sight (LOS) data to the KMU-572 guidance set. The sensor will continuously track a laser designated target illuminated by a laser spot and transmit data to the KMU-572 guidance set. These LOS angles are provided to KMU-572 guidance set to update target location. JDAM/Laser JDAM GBUs use the FMU-152/B and FMU-143E/B fuzes and are backward compatible with the FMU-139 series fuzes with or without FZU-48 in some configurations.

2.1.4.5 Practice bombs are used to simulate the same ballistic properties of service type bombs. They are manufactured as either solid cast metal bodies or thin sheet metal containers. Since practice bombs contain no explosive filler, a practice bomb signal cartridge (smoke) is used for visual observation of weapon target impact.

2.1.4.5.1 Practice bombs provide a low cost training device for pilot and ground handling crews. Due to the relatively small amount of explosive material in practice bombs (small signal charge), the availability of ranges for training is greatly increased.

2.1.4.5.2 The general types of practice bombs are sub-caliber or full scale practice bombs. Sub-caliber means that the practice bomb is much smaller in size and weight than the service bomb it simulates. The MK 76, MK 106, BDU-33D/B, and BDU-48/B are sub-caliber practice bombs. The

BDU-45 representative of the MK 82 series bomb. The BDU-45s are inert loaded, full scale practice bombs. Full scale practice bombs are representative of service bombs in size and weight.

2.1.4.5.3 Although not classified as practice bombs, the MK 80 series inert filled LDGP bombs are used extensively for practice bombing. These bombs are physically the same as the MK 80 series LDGP service bombs except that they do not contain any explosive filler and are painted blue (may be grey or olive drab color with blue stripes). These bombs provide training for assembly and loading crews, as well as training for the pilots.

2.1.4.5.4 The Laser Guided Training Round (LGTR) provides a low cost training device permitting aircrews to realistically practice the employment of Paveway II Guided Bomb Units. The LGTR (BDU-59 series) duplicates the release envelope, terminal guidance, and closely matches the time of flight characteristics of the GBU-16/B (MK 83 Paveway LGB). The LGTR is comprised of two sections (Guidance Control Section and Payload Section). The Guidance Control Section consists of the seeker, the signal processor, control system, and power supply. The Payload Section consists of the ring airfoil at the trailing edge which also houses the signal cartridges (MK 4 or CXU-3A/B) and the ejector assembly. The LGTR II (BDU-60 series) is identical to the LGTR, except that it duplicates the release envelope, terminal guidance, and closely matches the time of flight characteristics of the GBU-24B/B.

2.1.4.6 Components required to complete the assembly of a bomb into a complete round include various mechanical and electrical fuzes, sensing elements and TDDs, boosters, igniters, and fins.

2.1.4.6.1 Detonation of a bomb is controlled by the action of a fuze. A fuze is defined as a device for initiating the detonation of an explosive charge at the proper time after certain conditions have been fulfilled. A bomb fuze is either a mechanical or an electrical device that provides the sensitive explosive elements (the primer and detonator) and the necessary mechanical or electrical action to detonate the main booster charge.

2.1.4.6.2 The Navy uses the M904 mechanical nose fuze with the M9 delay element and the FMU-139 series electric tail fuze in LDGP bombs. The FMU-164 fuze is scheduled to replace the FMU-139 and FMU-143 series electric tail fuze. The FMU-143 series tail fuze is used with the FZU-32B/B initiator for the GBU-24 series. Penetrator Bomb Fuze FMU-143 series are used with penetrator bombs BLU-109A/B and BLU-116A/B as part of the GBU-24 Series Guided Bomb Units. A FZU is an electrical generator power source for electronic fuzes. It is not used with mechanical fuzes. The only FZUs in Navy inventory are FZU-48/B which can be used in both JDAM/LJDAM and GBU-10/12/16 Guided Bomb Units and the FZU-32B/B which is used with the GBU-31(V)4/B as well as the GBU-24 series Guided Bomb Unit. The DSU-33 series proximity sensor is used with the JDAM and LDGP bomb series weapons. Other fuzes are used with specialized bombs such as cluster bombs and fire bombs. The MK 339 series mechanical time fuzes and FMU-140 series electronic fuze are used in CBUs. The MK 77 series fire bomb utilizes the MK 13 MOD 0 initiators, which consist of a MK 343 MOD 0 fuze and a MK 273 MOD 1 ignitor. The MK 13 MOD 0 initiator is assembled, stored, and shipped as a unit, and used with the MK 77 series Fire bomb.

2.1.4.7 Two types of fin assemblies are used with the LDGP bombs.

a. A conical fin is used for unretarded delivery and a retarding fin can be used for either retarded or non-retarded drops. The MK 80 series conical fin assembly is used to control the flight

of the bomb after release from the aircraft to ensure the bomb will follow a predictable path of descent and impact the target nose first.

b. Retarding fins used with LDGP bombs provide an aircraft with the capability of delivering bombs at high speed and low altitude without the normally associated danger from ricocheting bombs or fragments. It presents a low-drag configuration when in the unretarded mode and a high drag configuration when in the retarded mode.

2.1.4.8 MK 82 Conical Fin. The MK 82 conical fin provides a low-drag configuration for general purpose/practice bombs MK 82 MODs/BLU-111 and practice bomb BDU-45/B. The conical fin provides the aircraft with the capability of delivering the bomb at high altitudes. The conical fin has an elongated cone 26.11 inches long made of heavy gauge steel with welded joints weighing 26.90 pounds. The cone tapers down to four fixed fins with a fin span of 15.06 inches. The fixed fins are in a two degree cant, 90 degrees apart from one another. A small hole is located on the top and bottom of the fin for threading the arming wire. An index pin is located on the rim of the fin for mating with the index hole on the bomb body. Six set screws are used to attach the fin to the bomb body. The fin has an access cover for access to the tail fuze. This cover is held in place by three fasteners. The fin is olive drab with nomenclature stenciled on it for identification.

2.1.4.9 BSU-33A/B, B/B Conical Fin. The BSU-33A/B, B/B conical fin provides a low-drag configuration for general purpose/practice bombs MK 82 MODs/BLU-111 and practice bomb BDU-45/B. The conical fin has an elongated cone 26.11 inches long made of heavy gauge steel with welded joints weighing 22.1 pounds. The cone tapers down to four evenly spaced fixed fins with a fin span of 15.06 inches. The fixed fins are in a two degree cant, 90 degrees apart from one another. A small hole is located on the top and bottom of the fin for threading the arming wire. An index pin is located on the rim of the fin for mating with the index hole in the bomb body. A quick attach mechanism with a non-reusable nyloc inserted nut is used to attach the fin to the rear of the bomb body. This quick attach device uses a single allen set screw to tighten a collapsible band around the bomb. The fin has an access cover for access to the tail fuze. This cover is held in place by three fasteners. The fin is gray in color with nomenclature stenciled on it for identification.

2.1.4.10 MAU-93/B Conical Fin. The MAU-93/B Conical Fin provides a low-drag configuration for MK 82 MODs/BLU-111 general purpose/practice bombs. The conical fin has an elongated cone 42.98 inches long made of heavy gauge steel with welded joints weighing 26.9 pounds. The cone tapers down to four fixed fins with a fin span of 19.62 inches. An index pin is located on the rim of the fin for mating with the index hole on the bomb body. Six setscrews are used to attach the fin to the bomb body. The fin has an access cover for access to the tail fuze. This cover is held in place by three fasteners. The MAU-93/B fin is olive drab with nomenclature stenciled on it for identification.

2.1.4.11 MK 83 Conical Fin. The MK 83 conical fin provides a low-drag configuration for the MK 83 or the BLU-110 general purpose/practice bomb. The conical fin has an elongated cone 42.98 inches long made of heavy gauge steel with welded joints weighing 56.8 pounds. The cone tapers down to the aft end, to four evenly spaced fix fins with a fin span of 19.62 inches. An index pin is located on the rim of the conical fin for mating with the index hole in the bomb. Six set screws are used to attach the fin to the bomb body. The MK 83 MOD

1 is constructed of a higher strength steel to reduce stress fractures when flown on the F/A-18E/F. The MK 83 fin is gray or olive drab in color with the nomenclature stenciled on it for identification.

2.1.4.12 MK 84 Conical Fin. The MK 84 conical fin provides a low-drag configuration for the MK 84 MODs and BLU-117 general purpose/practice bomb. The conical fin has an elongated cone 49.09 inches long constructed of a heavy gauge steel with welded joints weighing 114 pounds. The cone tapers down to four evenly spaced fix fins with a fin span of 25.32 inches. An index pin is located on the rim of the conical fin for mating with the index hole in the bomb. Eight set screws are used to attach the fin to the bomb body. The fin has an access cover on the side for access to the tail fuze. The MK 84 fin is gray with the nomenclature stenciled on it for identification.

2.1.4.13 BSU-86 Fin. The BSU-86 fin is used with general purpose/practice low altitude high speed delivery bomb MK 82 MODs/BLU-111 or practice bomb BDU-45/B. The fin provides the aircraft with a capability of retarded (high-drag) low altitude, high speed delivery or unretarded (low-drag) bomb delivery. The fin has an overall length of 25.7 inches, a diameter of 18.56 inches, and weighs 66 pounds. Proto-type fins are olive drab, all others are gray with nomenclature stenciled on it for identification. The fin is attached to the bomb body by eight set screws. Each fin blade has a 25-degree wedge at the fin tip to impart spin. Each fin is equipped with a MAU-199 spring arming wire (SAW) located between the convolutes of the top fin blade and is in line with the bomb lugs.

2.1.4.14 BSU-85/B Fin. The BSU-85 is an air inflatable retarder deigned for low altitude, high speed, high drag deliveries or unretarded, low drag deliveries. The BSU-85/B is used with general purpose/practice bombs MK 83 or BLU-110. The fin overall length is 29.30 inches with a diameter of 12.94 inches. The weight of the fin is 90 pounds. The fin is attached to the bomb body by eight set screws. The BSU-85/B is gray with nomenclature stenciled on it for identification. The four fixed fins which are attached to the canister housing provide low-drag aerodynamic stability.

NOTE

With fin standing on end, if moisture is evident in or around vent cap or extruding from aft cover, fin should not be used in the high drag mode.

NOTE

Do not use the assembly if a question exists concerning functionality. Contact a higher authority for guidance.

a. Condition of external surface, i.e., corrosion such as red/brownish rust, cracks, bent fins, or dents deeper than 1/4 inch. Special attention to lanyard assembly, wire cable, and aft end housing.

b. Missing parts, i.e., screws, fin wedges, lanyard assembly, etc.

c. Aft housing removed from stabilizer housing or nylon retainer extended/pulled from housing.

2.1.4.15 The BSU-85/B fin is shipped in a reusable Shipping/Storage Container (SSC), CNU-419/E, CNU-419/E Modified, CNU-419A/E or CNU-419B/E are reusable components and will be returned to the nearest weapons station.

2.1.5 Aircraft Gun Ammunition. Aircraft gun ammunition is developed for specific types of aircraft-mounted guns. M50 series and PGU series 20mm ammunition for the M61A1 and M197 guns, and PGU series 25mm ammunition for the A/A49E-10 gun system are the larger caliber types currently in the Navy inventory. Each type of aircraft gun ammunition consists of various types of cartridges developed for specific applications, including test cartridges, dummy cartridges, target practice, target practice-tracer, armor piercing incendiary, high-explosive incendiary, and semi-armor piercing, high-explosive incendiary. Aircraft gun ammunition also includes small caliber ammunition used in helicopter gun systems. The .50 caliber XM-218, GAU-16 and GAU-21 aircraft machine gun fires armor piercing, armor piercing incendiary, incendiary, and tracer ammunition. Blank and dummy rounds are also used for training and maintenance. Helicopter weapons systems also include the GAU-17 and the M60/M240 gun systems. The systems use standard 7.62mm ammunition, including armor piercing, ball, tracer, and dummy rounds.

2.1.6 Cartridges and Cartridge Actuated Devices. Cartridges and Cartridge Actuated Devices (CADs) are utilized for many applications because of their high reliability and ease of maintenance. Cartridges are used to operate bomb rack ejection systems, missile launchers, various dispensers, and to perform several functions in aircrew escape systems. Other types of cartridges are used to provide delay functions in various systems and to actuate aircraft fire extinguisher systems and in airborne fuel transfer stores. Types of cartridges include the MK 1 MOD 3 impulse cartridge, used for actuating a refueling hose guillotine in an in-flight emergency to sever the hose; the MK 2 MOD 1 impulse cartridge, used in bomb racks for release and ejection of stores from an aircraft during flight; the MK 19 MOD 0 impulse cartridge, used in bomb racks to provide emergency release capabilities; and the MK 23 MOD 0 cartridge, used to actuate the cable cutting device for helicopter hoist. Other applications for cartridges include providing a power source for ejecting decoy flares from dispensers. The CCU-136 cartridge is used for this purpose. Numerous other CADs are in the Navy inventory. Refer to NAVAIR 11-100-1.1 (CADs for aircraft and associated equipment) for more information and complete listings.

2.1.7 Aircraft Rockets, Rocket Launchers, and Jet/Rocket Assisted Takeoff Rocket Motors. Aircraft rockets presently in use include the 2.75-inch Wrap-Around Fin Aerial Rocket (WAFAR), 5.0-inch ZUNI (WAFAR) and Advanced Precision Kill Weapons System (APKWS). Various rocket fuzes, warheads, and rocket motors make up the assembled rounds. All present day rockets are carried and fired from bomb rack-mounted launchers, such as the LAU-10 ZUNI launcher for 5.0-inch rockets, the LAU-61 and LAU-68 series launchers for the 2.75-inch rocket and APKWS.

2.1.7.1 2.75 inch. The unguided 2.75 inch rocket was developed for air-to-ground applications. The rockets can also be used to illuminate and mark ground targets. The 2.75 inch family of WAFAR, based on the MK 66 universal motor, was developed from the previous 2.75 inch MK 40 motor-based Folding Fin Aerial Rocket (FFAR). The MK 40 was originally used during the Korean and Vietnam wars, beginning a rich history of providing close air support to ground forces from about 20 different firing platforms, both fixed-wing and armed helicopters, by all U.S. armed forces. Today the Marine Corp's AH-1 Cobra and UH-1 Huey carry the 2.75 launcher standard on its weapon pylons.

2.1.7.2 5.0 inch. The unguided 5.0-Inch Rocket was originally developed for both air-to-air and air-to-ground applications, but is currently used almost exclusively in the later role. The rockets can also be used to mark ground targets, and other air-to-ground applications. The rockets are assembled into complete AURs to deliver a variety of payloads. The type of fuze and warhead combination is determined by the tactical requirement.

The 5.0-Inch unguided rocket uses folding fins for aerodynamic stability. The 26.7 kilogram obsolete MK 16 Mod 3 motor incorporates a double-base solid propellant with a burn time of 1.2 to 1.5 seconds, depending on ambient temperature. The motor is 1.95m long with a diameter of 130mm. In the early 1970s a product improvement plan was conducted to develop and qualify a 5.0 inch rocket motor with improved accuracy and performance. DT of the MK 71 Mod 1 was completed and a release for production was granted in February 1973. Operational Test (OT) was conducted in 1972-73. Full production of the MK 71 Mod 1 motor began in September 1973. The rocket motor MK 71 Mod 1 consists of a motor tube and contact band assembly, igniter, stabilizing rod assembly, charge support spring, spacer and cup assembly, propellant grain assembly, seal ring, nozzle and fin assembly, radiation hazard barrier and shielding band. The MK 71 Mod 1 motor is classified as “Electrostatic Discharge (ESD) and Hazards of Electromagnetic Radiation to Ordnance (HERO) Susceptible ordnance” when the radiation hazard barrier and shielding band are in place.

The MK 71 Mod 2 consists of the same major internal components except the new ignition circuit which certifies the rocket motor as ESD and HERO safe. This rocket motor has been classified as ship board compatible.

Overall rocket length and weight will vary dependent on fuze and warhead combination. The warhead is delivered with the fuze installed. The fuze and warhead combination is determined by mission need. Standard warheads include the MK 24 GP explosive warhead that is 0.48m long, has a diameter of 133mm and weighs 22kg, and the MK 32 shaped charge warhead for anti-armor targets that is 0.76m long, has a diameter of 133mm and weighs 20kg.

2.1.7.3 APKWS. The Navy has assumed the APKWS II program from the Army. At the time the Navy took over the program (Milestone B) the Army was meeting cost, schedule, and technical performance goals when the Army terminated its support, citing fiscal constraints.

APKWS II adds a mid-body Semi-Active Laser (SAL) guidance section to the current 2.75-inch rocket for a low cost, precision kill capability. The target set includes enemy personnel, and soft to lightly armored/hardened vehicles (stationary and moving) and structures. APKWS II offers the warfighter precision kill, increased number of kills per sortie, greater standoff, and reduced chances for fratricide and collateral damage when compared to unguided rockets. The threshold aircraft is the AH-1W Super Cobra attack helicopter. The APKWS II AUR will consist of three components:

a. A rocket motor (MK 66 Mod 4),

b. A warhead (M151, MK 152 Mod 0 warhead with M423 fuse), and

c. An APKWS II Guidance Section (GS).

As with unguided rockets, the APKWS II AUR will be assembled in the field and then loaded into a rocket launcher (LAU-61 (19-tube) or LAU-68 (7-tube) rocket launcher). The APKWS

II GS mid-body design will be installed between the rocket motor and warhead. No aircraft or unguided rocket system modifications are required for APKWS II. For the AH-1W aircraft, APKWS II will be fired like unguided rockets, and targets will be laser designated like the Hellfire missile. Optics for collecting laser energy will be located on the leading edge of each guidance section wing. Wings will be designed to be deployed immediately after launch. APKWS II will guide toward coded, reflected laser energy. An APKWS II Navy Shipping and Storage Container (NSSC) is part of the APKWS II program.

2.1.7.4 Rocket fuzes are classified according to their location in the warhead; that is, nose fuze or base fuze. They may be further classified by mode of operation such as impact firing, mechanical time, or proximity.

2.1.7.5 Impact firing fuzes are fuzes that function when the rocket strikes a target. MK 352 and M423 fuzes are of that type.

2.1.7.6 Mechanical time fuzes are fuzes that function by the action of a mechanical timer. Such fuzes contain a safety and arming device and a clock mechanism.

2.1.7.7 Acceleration and deceleration fuzes are similar to impact and time fuzes in that they require acceleration for a given time to complete the arming cycle. After the arming cycle is complete and when the rocket velocity begins to drop, deceleration causes the fuze to function.

2.1.7.8 Different tactical requirements demand specific types of rocket warheads to be used with airborne rockets. The warheads are broadly classified as high explosive, flechette, smoke, flare, and practice. Warheads for the 2.75-inch rockets are received as a fuzed warheads.

2.1.7.8.1 High explosive fragmentation warheads are designed to be effective against personnel and lightly armored targets. The warhead explosive is detonated by a point detonating or proximity fuze. The M151, MK 152 Mod 0 and MK 146 Mod 0 are high-explosive fragmentation warheads.

2.1.7.8.2 Smoke warheads, such as the M156, are designed to produce a volume of heavy smoke for target marking. The warhead contains a burster tube of explosive which bursts the walls of the warhead, dispersing the smoke.

2.1.7.8.3 Flare warheads, such as the M257and M278, are designed to provide visible and infra-red illumination for tactical operations. These warheads consist of a delay action fuze, illuminating candle, and parachute assembly.

2.1.7.8.4 Flechette warheads WDU-4A and MK 149 Mod 0 are designed to be effective against personnel and lightly armored targets. These warheads contain a number of arrow-shaped projectiles. A small explosive charge in the warhead dispenses the flechettes after rocket motor burnout.

2.1.7.8.5 Practice warheads, such as the WTU-1B, are either dummy configurations or inert-loaded service warheads in which the weight and placement of an inert filler gives the practice warhead the same ballistic characteristics as those of the explosive-loaded service warhead.

2.1.7.9 Rocket motors currently used in the 2.75-inch and 5.00-inch air launched rocket systems are solid propellant, cartridge-loaded grain configurations utilizing folding fins. The propellant grain in most rocket motors is an internal burning, star perforation grain made from double-base propellant. The star perforation is designed to produce a nearly constant thrust level. The external portion of the grain is covered with an inhibitor to prevent burning on the

surface. The nozzle and fin assembly attaches to the aft end of the motor tube. The nozzle and fin assembly consists of a nozzle body, carbon insert, fins, contact band assembly, weather seal and end shield. The MK 66 motor series is used with the 2.75-inch system. The MK 71 motor series is used with 5.00-inch ZUNI rocket system.

2.1.7.9.1 Aircraft rockets are delivered to user activities loaded in airborne rocket launchers. These rocket launchers are a combination shipping, storage, and launching container. The launchers have a rotary stepper-switch type intervalometer which provides either a single or ripple fire capability. The LAU-61 launcher contains nineteen 2.75-inch WAFAR. The LAU-68 contains seven 2.75-inch WAFAR. Four 5.00-inch ZUNI rockets are carried and launched from the LAU-10 series rocket launcher. 2.75-inch rockets can also be tube loaded on specific rotary wing aircraft if required.

2.1.7.9.2 Jet Assisted Takeoff (JATO) Rocket Assisted Takeoff (RATO) rocket motors are primarily used to provide auxiliary thrust to assist heavily loaded aircraft during takeoff. Their purpose is to augment the thrust obtainable from the basic aircraft propulsion system, extending the capability of the aircraft for short takeoff, and reducing the limitations on gross weight, payload, and range of an aircraft. Other applications provide launching assistance to target drones, Remotely Piloted Vehicles (RPV), and propulsion for rocket test sleds. JATO rocket motors MK 6, MK 7, and MK 25 and all modifications are used for aircraft. The MK 23 JATO motor is used to provide the means of propulsion for test vehicles and sleds and the initial propulsion for drone aircraft. JATO rocket motors and MK 91 and MK 117 are used primarily for launching target drones. RATO rocket motor MK 125 is used for launching remotely piloted vehicles.

2.1.8 Propellant Actuated Devices. PADs components include rocket motors, rocket catapults and tubes, and various cartridges. These items are designed to explosively remove the ejection seat and aircrew from an aircraft, stabilize the trajectory of the man and seat combination, separate the aircrew from the ejection seat, and assist in the opening of the parachute. Various impulse cartridges and mild detonating cord systems for canopy and egress hatch removal are also included. Typical PADs and their applications include the MK 19 MOD 0 impulse cartridge, which is used to unlock and remove the canopy from an aircraft prior to the ejection of the seat in an emergency escape, and the M397 ejection seat cartridges, used to actuate a telescoping catapult to eject the seat and pilot during an emergency. Also included are the detonator cord assemblies for emergency egress systems in various aircraft which provide aircraft and canopy hatch separation and seat rocket motors.

2.1.9 Pyrotechnic, Screening, and Marking Devices. The pyrotechnic, screening, and marking devices currently available for Fleet use contain combustible chemicals which, when ignited, generate a flame, flash, smoke, sound display, or combination of these effects. These items are used for a variety of purposes, including visual and audible signaling, area and target illumination, reference point marking, indication of practice weapon impact or fuze action, tracking, jet engine restarting, and smoke-screen generation. Pyrotechnics include the MK 45 and the LUU-2B aircraft parachute flares. These devices are used to provide nighttime illumination of surface areas in search and attack operations. They are carried and dispensed from the SUU-25 stores dispenser. The dispenser can also drop sonobuoys and other stores. Marking devices include the MK 25 and MK 58 Marine Location Markers (MLM). The MK 25 MLM is used to provide a surface reference point primarily for antisubmarine warfare operations. It provides both flame and smoke for approximately 15 minutes. It can be launched by hand or by retro-ejector. The MK 58 MLM provides a long-burning reference point capability for antisubmarine

operations. The MK 58 burns for approximately 40 to 60 minutes. This MLM is launched by hand or from aircraft bomb racks.

2.1.10 Airborne Electronic Warfare Expendable Countermeasures. These types of countermeasure devices are dispensed from an aircraft to introduce tracking errors in an enemy's radar or to prevent a heat seeking missile from locking on to the aircraft. Countermeasures operate in two categories: Radio Frequency (RF) and Infrared (IR). RF devices can be either passive or active. The best known passive device is chaff. Chaff consists of tiny strands of spun glass fibers coated with aluminum and cut to specific lengths according to the operating wavelengths of the tracking radar. When dispensed, chaff will form a large cloud called a bloom that will reflect radar energy back to the ground radar along with the aircraft's reflective energy creating multiple targets on the radar display screen. Active RF devices are launched against RF homing missiles and will actually receive tracking radar signals and then transmit slightly altered radar signal back, which will induce errors in the tracking radar. IR devices generate heat and infrared energy, which is used to distract an infrared heat-seeking missile away from the aircraft. Currently there are two different forms of IR devices. One is composed of a pyrotechnic composition that is ignited and burns while falling away from the aircraft. The other is composed of a pyrophoric metal shaped thin wafers that reacts with oxygen in the air once it is dispensed. Basically, the material rusts so quickly it gives off a heat signature, which is in the sensing spectrum of the missiles heat seeking sensor. Standard Navy RF and IR expendable countermeasures are about six inches in length and 1.5 inches in diameter (round), although some countermeasure dimensions can measure 1W x 1H x 8L inches square. All Navy countermeasure devices are dispensed using the AN/ALE family of dispensers.

2.1.11 Underwater Acoustic Devices. Signals, Underwater Sound (SUS) are expendable devices used to produce a powerful source of underwater acoustic energy, either explosively or electronically. This energy (sound) is used to provide various capabilities for antisubmarine warfare, search and rescue operations, aircraft-to-submarine communications, and oceanographic survey. The SUS are hand or dispenser launched from helicopters, antisubmarine, and patrol aircraft. Antisubmarine warfare tactics utilize explosive echo ranging as a means of submarine detection and tracking. MK 61 and MK 78 SUS are used for this purpose. MK 92 SUS is used for training exercises, as are the dummy SUS MK 95 and TAU-192/B. The MK 84 SUS is used for submarine communications or as attack signals during antisubmarine warfare training or tactical exercises. This SUS produces a selectable underwater electro-acoustic code recognizable by submarine passive sonars or underwater telephones.

2.1.12 Sonobuoy. The AN/SSQ-110 Extended Range Sonobuoy is an aircraft launched expendable device used to locate underwater vehicles. It is configured with a windflap/parachute, a saltwater-activated-chloride battery, electronics for transmitting and receiving electromagnetic waves, and two explosive payloads. The AN/SSQ-110 is 36 inches in length, 4.87 inches in diameter, and weighs 34.9 pounds.

2.1.13 Maintenance Philosophy. Airborne ordnance and ammunition employs relatively simple, rugged, and reliable construction in order to withstand the rigors of extensive handling and high-speed flight environments. Unlike air launched missiles, airborne ordnance and ammunition has no requirement to be returned to a Naval Weapons Station (NWS), Navy Munitions Command (NMC) Detachment or Naval Airborne Weapons Maintenance Unit (NAWMU) for periodic testing. Once issued to a ship, Weapons Department or NMC Detachment, airborne ordnance

and ammunition remains in the custody of that activity until it is issued to a Fleet unit and is expended; suspended from service by action of a Notice of Ammunition Reclassification (NAR); or transferred to another custodian as directed by higher authority. Maintenance processes at each of the three maintenance levels described in Volume II, Chapters 1.2 through 1.4 are designed to assure that all ordnance and ammunition is maintained at the highest level of readiness, safety, and reliability.

2.1.14 Conventional Ordnance Performance Evaluation (COPE).

2.1.14.1 The COPE program has been established to assess the performance of live ordnance expended by Fleet units. The complete weapon system is assessed, including the aircraft, weapon control systems, suspension and release mechanisms, ground support equipment, expendable ordnance as well as personnel (maintenance, ground, and air). The COPE program encompasses:

a. On-site support for large scale Navy and Marine Corps exercises involving the expenditure of ordnance and ammunition items.

b. Data collection and integration into COPE data base.

c. In-depth analysis of performance data to accurately assess weapon readiness and identify problem areas.

d. Problem area follow-up and monitoring of corrective actions.

e. Failure analysis investigations of identified problems and deficiencies in accordance with CODR submissions.

2.1.14.2 Responsibilities.

a. COMNAVAIRSYSCOM director manages the logistics program, budgets for, and provides resources to the Quality Engineering Management Office (QEMO) Naval Surface Warfare Center (NSWC) Division Crane, IN.

b. Under the direction of the QEMO NAWCWD, China Lake, CA, is responsible for performing COPE on various energetic components.

c. The NSWC Division, Indian Head, MD is a participating activity responsible to NSWC Division Crane, IN for performing COPE on aircraft rockets and rocket system components.

2.1.15 Ordnance and Ammunition Logistics. A significant portion of ordnance and ammunition is not unique to U.S. Navy and Marine Corps but is common to all three services (Army, Air Force, Navy). For these items, the Department of Defense has established the Army as single site manager. The single site manager is responsible for the acquisition of common ordnance and ammunition items for all three services. The single site manager for ordnance and ammunition is the U.S. Army Armament, Munitions, and Chemical Command located in Rock Island, IL. Most 2E cognizance ammunition is provided by armament munitions and chemical commands which are government-managed and-operated manufacturing facilities.

2.1.16 Ordnance Information System (OIS). The location and movement of ordnance and ammunition items is tracked through the OIS. The NAVSUP GLS AMMO maintains the OIS ammunition stock status file. The OIS ammunition stock status file is updated by ammunition

transaction reports which are submitted daily by all activities holding ordnance and ammunition. Any changes in inventory caused by receipts, transfers, or expenditure as well as any status changes within their 2E cognizance inventory must be reported.

CHAPTER 2.2

Organizational Level Maintenance

Table of Contents

Paragraph	Subject	Page
2.2.1	General	2-2-1
2.2.2	Organizational Level Maintenance Responsibilities	2-2-1

List of Illustrations

Figure	Title	Page
2-2-1	Organizational Level Maintenance Responsibilities for General Purpose Bombs	2-2-2
2-2-2	Organizational Level Maintenance Responsibilities for Cluster Bombs	2-2-2
2-2-3	Organizational Level Maintenance Responsibilities for Fire Bombs	2-2-3
2-2-4	Organizational Level Maintenance Responsibilities for Guided Bomb Units	2-2-3
2-2-5	Organizational Level Maintenance Responsibilities for Practice Bombs	2-2-4
2-2-6	Organizational Level Maintenance Responsibilities for Bomb Fuzes	2-2-4
2-2-7	Organizational Level Maintenance Responsibilities for Bomb Fins	2-2-5
2-2-8	Organizational Level Maintenance Responsibilities for Aircraft Gun Ammunition	2-2-5
2-2-9	Organizational Level Maintenance Responsibilities for Cartridge Actuated Devices (CADs)	2-2-6
2-2-10	Organizational Level Maintenance Responsibilities for Rockets, Launchers, and JATO/RATO	2-2-7
2-2-11	Organizational Level Maintenance Responsibilities for Propellant Actuated Devices (PADs)	2-2-7
2-2-12	Organizational Level Maintenance Responsibilities for Pyrotechnics	2-2-8

List of Illustrations - contd.

Figure	Title	Page
2-2-13	Organizational Level Maintenance Responsibilities for Dispensers	2-2-8
2-2-14	Organizational Level Maintenance Responsibilities for Countermeasures	2-2-9
2-2-15	Organizational Level Maintenance Responsibilities for Signals, Underwater Sound (SUS)	2-2-9

CHAPTER 2.2

Organizational Level Maintenance

2.2.1 General. This chapter discusses the maintenance actions assigned to the Organizational level (O-level) which are performed in support of the day-to-day operation of the unit. O-level maintenance is performed by squadron Aviation Ordnance technicians assigned to aircraft squadron maintenance departments. Volume I, Chapter 2.3, of this manual describes the objectives and structure of these activities. O-level maintenance directly supports and maintains the aircraft weapons system, which consists of the aircraft, airborne ordnance and ammunition, and associated interface items.

2.2.2 Organizational Level Maintenance Responsibilities. O-level maintenance actions are tailored within the constraints of the O-level's manpower and maintenance capabilities to ensure that the airborne ordnance and ammunition will perform its assigned end mission. The assigned maintenance actions are described generally in Paragraphs 2.2.2.1 through 2.2.2.14. All maintenance actions are to be performed in accordance with the approved technical manuals. Strict adherence to the procedures contained in the applicable airborne weapons and stores loading manuals is mandatory for all weapons loading and downloading evolutions. Figures 2-2-1 through 2-2-15 depict in matrix format the responsibilities of aircraft squadron maintenance departments for 2E cognizance weapons and ordnance items.

2.2.2.1 Storage. O-level maintenance activities based ashore are provided Ready Service Lockers (RSL) to support daily operations. RSLs are those designated spaces, which are conveniently located near the area to be served. Squadron ordnance personnel use ready service magazines to store ordnance items such as Cartridge Actuated Devices (CADs), Propellant Actuated Devices (PADs), aircraft gun ammunition, practice bomb signals, pyrotechnic devices, decoy flares, and Signals Underwater Sound (SUS). RSLs are authorized temporary storage areas for loaded rocket launchers and flare dispensers at bases where quantity distance requirements are met and local policies permit. At Navy Munitions Command (NMC) Detachments, Shipboard Weapons Departments, and Marine Corps Air Stations (Station Weapons), generally sub custody ready service magazines to squadrons. Squadron personnel are responsible for the security, cleanliness, and proper storage of ordnance items in the RSL. Aboard ship, RSLs remain under the cognizance of the weapons department. All RSLs utilized to store ordnance and ammunition must comply with the requirements of NAVSEA OP 4 (Ammunition Afloat) and NAVSEA OP 5 (Ammunition Ashore).

2.2.2.2 Assembly. Organizational maintenance personnel receive weapons from the supporting I-level activity either as an All-Up-Round (AUR), which requires no further assembly, or as a partially assembled round. O-level Aviation Ordnance personnel will complete the assembly of ordnance by installing fuzes, sensing elements, Target Detecting Devices (TDDs), and arming wires on MK 80 low drag general purpose bombs; fuzes and arming wires on fire bombs; spotting signals in practice bombs; igniters on Jet Assisted Takeoff (JATO) rocket motors and assemble chaff/decoy flares into the applicable magazine dispenser. Additionally, O-level Aviation Ordnance personnel may be required to belt aircraft gun ammunition when deployed for training or at forward bases. Refer to the applicable weapons and stores loading manual for specific instructions.

General Purpose Bombs	Assembly	Aircraft Prepara-tion and Inspection	Release and Control System Checks	Weapon Receipt and Inspec-tion	Weapon Loading/ Download-ing	Service Life	Arming/ Dearming	Postflight Inspec-tion	Defi-ciency Reports	Technical Directives
MK 82 or BLU-111 Series	X[1,2]	X	X	X	X	X	X[1]	X	X	X
MK 83 or BLU-110 Series	X[1,2]	X	X	X	X	X	X[1]	X	X	X
MK 84 or BLU-117 Series	X[1,2]	X	X	X	X	X	X[1]	X	X	X
BLU-109 or BLU-116 Series	X[1,2]	X	X	X	X	X	X[2]	X	X	X
BLU-126 Series	X[1,2]	X	X	X	X	X	X[2]	X	X	X
BLU-129 Series	X[1,2]	X	X	X	X	X	X[2]	X	X	X

NOTES:

1. O-level maintenance assembly consists of a fuze and TDD.
2. O-level maintenance installs/removes arming lanyard/cables.

Figure 2-2-1. Organizational Level Maintenance Responsibilities for General Purpose Bombs

Cluster Bomb Units	Aircraft Preparation and Inspection	Release and Control System Checks	Weapon Receipt and Inspection	Weapon Loading/ Download-ing	Service Life	Arming/ Dearming	Post-flight Inspec-tion	Defi-ciency Reports	Technical Directives
CBU-78C/B	X	X	X	X	X	X	X	X	X
CBU-99(T-1)B CBU-99B/B CBU-99(T-1)B/B CBU-99(D-1)B/B	X	X	X	X	X	X	X	X	X
CBU-100(T-1)B CBU-100(T-1)B/B CBU-100(D-1)B/B	X	X	X	X	X	X	X	X	X
SUU-76C/B PDU-5/B	X	X	X	X	X	X	X	X	X

Figure 2-2-2. Organizational Level Maintenance Responsibilities for Cluster Bombs

Fire Bombs	Assembly	Aircraft Preparation and Inspection	Release and Control System Checks	Weapon Receipt and Inspection	Weapon Loading/ Downloading	Service Life	Post-flight Inspec-tion	Deficiency Reports	Technical Directives
MK 77	X	X	X	X	X	X	X	X	X

Figure 2-2-3. Organizational Level Maintenance Responsibilities for Fire Bombs

Guided Bomb Units	Aircraft Preparation and Inspection	Release and Control System Checks	Weapon Receipt and Inspection	Weapon Loading/ Download-ing	Service Life	Arming/ Dearming	Postflight Inspection	Deficiency Reports	Technical Directives
GBU-10	X	X	X	X	X	X	X	X	X
GBU-12	X	X	X	X	X	X	X	X	X
GBU-16	X	X	X	X	X	X	X	X	X
GBU-24	X	X	X	X	X	X	X	X	X
GBU-31	X	X	X	X	X	X	X	X	X
GBU-32	X	X	X	X	X	X	X	X	X
GBU-38	X	X	X	X	X	X	X	X	X
GBU-51	X	X	X	X	X	X	X	X	X
GBU-52	X	X	X	X	X	X	X	X	X
GBU-54	X	X	X	X	X	X	X	X	X

Figure 2-2-4. Organizational Level Maintenance Responsibilities for Guided Bomb Units

Practice Bombs	Storage	Assem-bly	Aircraft Prepara-tion and Inspec-tion	Release and Control System Checks	Weapon Receipt and Inspec-tion	Weapon Loading/ Down-loading	Service Life	Arming/ Dearm-ing	Post-flight Inspec-tion	Defi-ciency Reports	Techni-cal Direc-tives
MK 76	X	X1	X	X	X	X		X	X	X	X
BDU-33D/B	X	X1	X	X	X	X		X	X	X	X
BDU-45/B	X	X1	X	X	X	X		X	X	X	X
BDU-48/B	X	X1	X	X	X	X		X	X	X	X
LGTR	X	X1	X	X	X	X	X	X	X	X	X

NOTES:

1. Usually limited to installation of spotting charges but may include fuzes and fins.

Figure 2-2-5. Organizational Level Maintenance Responsibilities for Practice Bombs

Bomb Fuzes	Assembly	Aircraft Preparation and Inspection	Release and Control System Checks	Weapon Receipt and Inspection	Weapon Loading/ Download-ing	Service Life	Postflight Inspection	Defi ciency Reports	Technical Directives
DSU-33 Series		X		X	X	X		X	X
FMU-139 Series		X	X	X	X1	X	X	X	X
FMU-140 Series		X	X	X	X1	X	X	X	X
FMU-143 Series		X	X	X	X1	X	X	X	X
MK 339 Series		X	X	X	X1	X	X	X	X
M904 Series	X2	X	X	X	X	X	X	X	X
DSU-38		X		X	X1	X	X	X	X

NOTES:

1. Loaded and downloaded as integral part of weapon.
2. Installation of delay element only.

Figure 2-2-6. Organizational Level Maintenance Responsibilities for Bomb Fuzes

Bomb Fins	Aircraft Preparation and Inspection	Release and Control System Checks	Weapon Receipt and Inspection	Weapon Loading/ Download-ing	Arming/ Dearming	Postflight Inspection	Deficiency Reports	Technical Directives
MK 82/MAU-93 Series (Conical)	X	X	X	X	X	X	X	
MK 83 Series (Conical)	X	X	X	X	X	X	X	X
MK 84 Series (Conical)	X	X	X	X	X	X	X	X
BSU-33 Series (Conical)	X	X	X	X	X	X	X	X
BSU-86 Series (Retarded)	X	X	X	X[1,2]	X	X	X	X
BSU-85 Series	X	X	X	X[1,2]	X		X	X

NOTES:

1. Loaded and downloaded as integral part of weapon.
2. Install arming wires as required.

Figure 2-2-7. Organizational Level Maintenance Responsibilities for Bomb Fins

Aircraft Gun Ammunition	Storage	Assem-bly	Aircraft Prepara-tion and Inspec-tion	Release and Control System Checks	Weapon Receipt and Inspec-tion	Weapon Loading/ Down-loading	Arming/ Dearming	Post-flight Inspec-tion	Defi-ciency Reports	Technical Directives
M50 Series 20mm AMMO	X	X[1]	X	X	X	X	X	X	X	X
PGU Series 25mm AMMO	X	X[1]	X	X	X	X	X	X	X	X
.50 Caliber AMMO	X	X[1]	X	X	X	X	X	X	X	X
7.62mm NATO AMMO	X	X[1]	X	X	X	X	X	X	X	X

NOTES:

1. Limited to linking of ammunition.

Figure 2-2-8. Organizational Level Maintenance Responsibilities for Aircraft Gun Ammunition

Miscel laneous Cartridges	Storage	Aircraft Preparation and Inspection	Release and Control System Checks	Weapon Receipt and Inspection	Service Life	Postflight Inspection	Install/ Remove	Deficiency Reports	Technical Directives
MK 1 Impulse Cartridge	X	X	X	X	X	X	X	X	X
MK 2 Impulse Cartridge	X	X	X	X	X	X	X	X	X
MK 4 Impulse Cartridge	X	X	X	X	X	X	X	X	X
MK 8 Impulse Cartridge	X	X	X	X	X	X	X	X	X
MK 9 Impulse Cartridge	X	X	X	X	X	X	X	X	X
MK 19 Impulse Cartridge	X	X	X	X	X	X	X	X	X
MK 51 Impulse Cartridge	X	X	X	X	X	X	X	X	X
MK 124 Impulse Cartridge	X	X	X	X	X	X	X	X	X
MK 125 Impulse Cartridge	X	X	X	X	X	X	X	X	X
MK 67 Impulse Cartridge	X	X	X	X	X	X	X	X	X
MK 131 Impulse Cartridge	X	X	X	X	X	X	X	X	X
MK 23 Impulse Cartridge	X	X	X	X	X	X	X	X	X

Figure 2-2-9. Organizational Level Maintenance Responsibilities for Cartridge Actuated Devices (CADs)

Rockets and JATO/ RATO	Storage	Assem-bly	Aircraft Prepara-tion and Inspec-tion	Release and Control System Checks	Weapon Receipt and Inspec-tion	Preven-tive Mainte-nance	Weapons Loading/ Down-loading	Service Life	Arming/ Dearm-ing	Post-flight Inspec-tion	Defi-ciency Reports	Techni-cal Direc-tives
LAU-10 Launcher	X		X	X	X	X	X		X	X	X	X
LAU-61 Launcher	X		X	X	X	X	X		X	X	X	X
LAU-68 Launcher	X		X	X	X	X	X		X	X	X	X
2.75" MK 66 Rocket			X	X	X		X[1]	X		X	X	X
5.00" MK 71 Rocket			X	X	X		X[1]	X		X	X	X
JATO/ RATO		X[3]	X	X	X	X[2]	X	X	X	X	X	X

NOTES:

1. Loaded and downloaded while installed in launcher only; launcher loading of rockets may be required at forward base.
2. Organizational maintenance for JATO/RATO is limited to touchup painting of the rocket motor exterior and touchup of identification. Marking on the rocket motor and igniter. If any defect other than touchup of paint or identification marking is found, dispose of rocket motor or igniter in accordance with NA 11-85M-2. Touchup painting and marking shall be accomplished in accordance with the materials and procedures identified in NA 01-1A-75.
3. Some assembly required during JATO/RATO loading procedures.

Figure 2-2-10. Organizational Level Maintenance Responsibilities for Rockets, Launchers, and JATO/RATO

Propellant Actuated Devices	Storage	Weapon Receipt and Inspection	Service Life	Deficiency Reports	Technical Directives
Impulse Cartridge	X	X	X	X	X
Catapult Ejection Seat Cartridge	X	X	X	X	X
MDC Detonator Cord Systems	X	X	X	X	X
Seat Rocket Motor	X	X	X	X	X

Figure 2-2-11. Organizational Level Maintenance Responsibilities for Propellant Actuated Devices (PADs)

Pyro-tecnics	Storage	Aircraft Preparation and Inspection	Release and Control System Checks	Weapon Receipt and Inspection	Weapon Loading/ Download-ing	Service Life	Arming/ Dearming	Post-flight Inspec-tion	Defi-ciency Reports	Techni-cal Direc-tives
LUU-2 Paraflare	X	X	X	X	X1	X	X	X	X	X
MK 25 MLM	X	X	X	X	X	X	X	X	X	X
MK 58 MLM	X	X	X	X	X	X	X	X	X	X

NOTES:

1. Loaded and downloaded in dispensers only.

Figure 2-2-12. Organizational Level Maintenance Responsibilities for Pyrotechnics

Dispen-sers	Storage	Aircraft Prepara-tion and Inspection	Release and Control System Checks	Weapon Receipt and Inspection	Weapon Loading/ Down-loading	Service Life	Arming/ Dearming	Postflight Inspection	Defi-ciency Reports	Tech-nical Directives
SUU-25	X	X	X	X	X1	X	X	X1	X	X

NOTES:

1. Loaded and downloaded in dispensers only.

Figure 2-2-13. Organizational Level Maintenance Responsibilities for Dispensers

Airborne Electronic Warfare Expendable Countermeasures	Storage	Assembly	Aircraft Preparation and Inspection	Release and Control System Checks	Weapon Receipt and Inspection	Weapon Loading/ Downloading	Service Life	Arming/ Dearming	Postflight Inspection	Deficiency Reports	Technical Directives
Decoy Flares	X	X	X	X	X	X	X	X	X	X	X
Decoy RT-1489/ALE (GEN-X)	X	X	X	X	X	X	X	X	X	X	X
Chaff RR Series	X	X	X	X	X	X	X	X	X	X	X

Figure 2-2-14. Organizational Level Maintenance Responsibilities for Countermeasures

Signals, Underwater Sound	Storage	Assembly	Aircraft Preparation and Inspection	Release and Control System Checks	Weapon Receipt and Inspection	Weapon Loading/ Downloading	Service Life	Arming/ Dearming	Postflight Inspection	Deficiency Reports	Technical Directives
SUS	X	X	X	X	X	X	X	X	X	X	X

Figure 2-2-15. Organizational Level Maintenance Responsibilities for Signals, Underwater Sound (SUS)

2.2.2.3 Aircraft Preparation and Inspection. Prior to any loading evolution, the aircraft must be prepared and inspected in accordance with the procedures issued in the applicable airborne weapons and stores loading manual for each aircraft. Aircraft preparation and inspection is a step-by-step procedure which must be performed to complete a safe and reliable load. During preparation and inspection, O-level Aviation Ordnance personnel ensure that the aircraft is properly positioned and grounded, impulse cartridges are removed from all stores stations, and armament switches are in the off, safe, or normal positions. Bomb racks will be inspected for proper configuration, swaybraces and ejector units adjusted to accommodate the stores to be loaded, and any accessory suspension equipment configured for loading. After the aircraft preparation and inspection procedures have been completed, the squadron ordnance supervisor will report the status of the aircraft to the proper authority. Any noted deficiencies must be corrected before the loading evolution can proceed.

2.2.2.4 Release and Control System Checks. Release and control system checks must be performed in accordance with the applicable airborne weapons and stores loading manual for each aircraft.

2.2.2.5 Weapon Receipt and Inspection. Prior to accepting a weapon or ordnance item from the supporting Intermediate maintenance level activity, O-level Aviation Ordnance personnel will inspect each weapon or item of ordnance received for proper integrity, dents, cracks, proper mating, and security of assembly. Wings and fins must be inspected for dents, cracks, distortions, corrosion, and proper component operation. Weapons with safe and arm mechanisms will be inspected to assure that the mechanism is in the proper position. AUR weapons such as cluster bomb units will be inspected for proper fuze settings and fin security. Weapons received loaded in launchers or dispensers will be inspected, and the launcher or dispenser will be inspected for proper safety pin or safety device installation. Ordnance items that are delivered to the squadron in sealed containers, such as CADs, PADs, and SUS, will be examined at the first opportunity after the containers are opened. Weapons or items of ordnance which do not meet inspection criteria should be rejected and the proper authority notified.

2.2.2.6 Preventive Maintenance. At the O-level, visual inspections are conducted to verify integrity, serviceability, and condition of installed PAD during scheduled aircraft maintenance inspections. Using applicable Maintenance Instruction Manuals (MIMs), organizational Aviation Ordnance personnel inspect and replace PAD components that have reached a specified replacement time or event interval. Any device displaying evidence of rough handling, damage, or major corrosion shall be replaced. Any maintenance requiring the use of hazardous/consumable materials shall be performed in accordance with NAVAIR 01-1A-75.

2.2.2.7 Weapon Loading. During weapon loading, O-level Aviation Ordnance personnel install airborne weapons and stores on or into an aircraft. Loading evolutions are performed within a designated loading and rearming area in accordance with the authorized weapons and stores loading checklist. Refer to the applicable airborne weapons and stores loading manual for specific loading procedural requirements. The loading manual also lists authorized loading equipment for handling and loading of weapons and stores.

2.2.2.8 Service Life. This is the period of time a CAD, Cartridge, or PAD can be used with an ensured high degree of reliability. Performance of CADs, Cartridges, or PADs is influenced

by the environment to which they are exposed. These limits are defined as shelf life and installed life.

2.2.2.8.1 Shelf Life. This is the period of time, beginning from the date of manufacture, a CAD, Cartridge, or PAD can remain in its hermetically sealed container and still be serviceable. Any CAD, Cartridge, or PAD will be inspected prior to installation to ensure that the prescribed shelf life has not been exceeded. Cads, Cartridges, or PAD shall be removed from inventory upon expiration of shelf life.

2.2.2.8.2 Installed Life. Installed life is the period of time a CAD, Cartridge, or PAD is allowed to be used after its hermetically sealed container is opened, however, the installed life expiration date shall never exceed the shelf life expiration date. O-level personnel will ensure that this information is entered into appropriate aircraft logbooks.

2.2.2.9 Arming. Prior-to-launch arming procedures transform a weapon from a safe condition to the armed condition required for weapon functioning. Arming procedures will be performed by O-level Aviation Ordnance personnel in authorized arming areas. During arming operations, personnel perform stray voltage tests, and arm forward firing aircraft gun systems. Procedures are issued by the applicable airborne weapons and stores loading manual for each aircraft.

2.2.2.10 Postflight Inspection. Postflight inspection of weapons and stores will be performed after landing or ground abort to determine the security and safety condition of the aircraft and stores. O-level Aviation Ordnance personnel will inspect weapons and stores for loose, damaged, or missing components and security and proper configuration of fuzes, arming wires, and safety devices. Procedures for postflight inspections are contained in the applicable airborne weapons and stores loading manual of each aircraft.

2.2.2.11 Dearming. Postflight weapon dearming procedures transform a weapon from the armed condition to a safe condition. Dearming procedures are performed prior to download and during turnaround evolutions. O-level Aviation Ordnance personnel will perform dearming procedures in an authorized dearming area in accordance with the applicable airborne weapons and stores loading manual for each aircraft.

2.2.2.12 Weapon Downloading. Weapon downloading procedures, as issued in the applicable airborne weapons and stores loading manual for each aircraft, are mandatory to ensure safety of personnel and equipment and prevent damage to the weapons and stores. O-level Aviation Ordnance personnel will perform downloading in an authorized downloading and rearming area using authorized handling and downloading equipment. Aircraft gun ammunition shall be inspected upon downloading in accordance with applicable technical manuals. Disassembly, such as removal of fuzes, arming wires, signals, etc., is commonly included in weapons downloading procedures.

2.2.2.13 Deficiency Reports. Deficiency reports are initiated at the O-level when a deficiency is discovered during the performance of any of the assigned O-level maintenance actions. Deficiency reporting procedures are contained in Volume I, Chapter 4.6, of this manual.

2.2.2.14 Technical Directives. O-level Aviation Ordnance personnel are responsible for assuring that Notices of Ammunition Reclassification (NARs), Airborne Weapons Bulletins (AWBs) and Airborne Weapons Changes (AWCs) directed to that level are complied with.

CHAPTER 2.3

Intermediate Level Maintenance

Table of Contents

Paragraph	Subject	Page
2.3.1	General	2-3-1
2.3.2	Intermediate Level (I-Level) Maintenance Responsibilities	2-3-1
2.3.3	Record Keeping and Reporting	2-3-13
2.3.4	Requisitioning	2-3-13

List of Illustrations

Figure	Title	Page
2-3-1	Intermediate Level Maintenance Responsibilities for General Purpose Bombs	2-3-2
2-3-2	Intermediate Level Maintenance Responsibilities for Cluster Bombs	2-3-2
2-3-3	Intermediate Level Maintenance Responsibilities for Fire Bombs	2-3-3
2-3-4	Intermediate Level Maintenance Responsibilities for Guided Bomb Units (GBUs)	2-3-3
2-3-5	Intermediate Level Maintenance Responsibilities for Practice Bombs	2-3-5
2-3-6	Intermediate Level Maintenance Responsibilities for Bomb Fuzes	2-3-5
2-3-7	Intermediate Level Maintenance Responsibilities for Bomb Fins	2-3-6
2-3-8	Intermediate Level Maintenance Responsibilities for Aircraft Gun Ammunition	2-3-6
2-3-9	Intermediate Level Maintenance Responsibilities for Cartridges and Cartridge Actuated Devices (CADs)	2-3-7
2-3-10	Intermediate Level Maintenance Responsibilities for Rockets, Launchers, and JATO/RATO	2-3-8
2-3-11	Intermediate Level Maintenance Responsibilities for Rocket Fuzes	2-3-8

List of Illustrations - contd.

Figure	Title	Page
2-3-12	Intermediate Level Maintenance Responsibilities for Rocket Warheads	2-3-9
2-3-13	Intermediate Level Maintenance Responsibilities for Propellant Actuated Devices (PADs)	2-3-9
2-3-14	Intermediate Level Maintenance Responsibilities for Pyrotechnics	2-3-10
2-3-15	Intermediate Level Maintenance Responsibilities for Dispensers	2-3-10
2-3-16	Intermediate Level Maintenance Responsibilities for Countermeasures	2-3-10

CHAPTER 2.3

Intermediate Level Maintenance

2.3.1 General. This chapter describes the maintenance actions assigned to Intermediate maintenance activities. Intermediate level (I-level) maintenance is authorized and designated to be performed by Navy Munitions Command (NMC) Detachments, Shipboard Weapons Departments, and Marine Corps Air Stations (Station Weapons). The following paragraphs discuss the maintenance functions performed at I-level activities.

2.3.2 Intermediate Level (I-Level) Maintenance Responsibilities. I-level maintenance activities perform higher level maintenance actions on airborne ordnance and ammunition in support of the Organizational level activity. The primary objective of I-level maintenance is to issue to the Organizational level an item which requires minimal maintenance actions to be performed at that level, allowing expedient preparation and loading of the item. Figures 2-3-1 through 2-3-16 assign the Intermediate maintenance actions that are performed on the airborne ordnance and ammunition listed in Volume II, Chapter 2.1, of this manual. The assigned maintenance actions are described generally in Paragraphs 2.3.2.1 through 2.3.2.14 of this Volume. All maintenance actions are to be performed in accordance with the approved technical manuals which have been developed for each item or family of ordnance and ammunition. The following is an explanation of the functions listed in the matrix.

2.3.2.1 Receiving Inspection. Receiving inspections are conducted by I-level maintenance personnel and include inspection of containers, cradles, palletized ammunition, and all fleet returned ammunition received by or inducted into an I-level activity. Containers and cradles are inspected for correct marking and for possible damage. Containers and cradles that are dented, crushed, punctured, or appear to have been tampered with are particularly suspect and must not be stored without examination of their contents. If the contents are damaged and that damage appears to be the result of damage to the container and cradle, the proper authority should be notified for appropriate deficiency reporting and disposition instructions. Receiving inspections shall be conducted in accordance with applicable directives.

2.3.2.2 Storage and Handling. All weapons, ordnance, and ordnance components will be stored by I-level maintenance personnel in accordance with NAVSEA OP 4, NAVSEA OP 5. I-level maintenance activities may store ammunition in primary or ready service storage depending on the configuration and immediate intended use of the ammunition. Marine Corps I-level activities have the capability and are authorized to erect and work from advanced base storage areas when forward deployed in accordance with NAVSEA OP 5, Volume 3.

2.3.2.2.1 Primary Magazines. Primary magazines are designed to accommodate the ship or station's complete allowance of ammunition. They are generally located below the main deck and usually below the waterline within the armored envelope of the ship or in a remote section of an air station.

2.3.2.2.2 Ready Service Magazines. Ready service magazines are those designated spaces which are conveniently located near the area to be served. They are capable of stowing completely assembled weapons for ready access.

General Purpose Bombs	Receiving Inspection	Storage & Handling	Packaging & Unpack-aging	Cleaning	Paint Touchup	Assembly & Disas-sembly	Ready Service Inspection	Technical Directives	Deficiency Reporting
MK 82 or BLU-111 Series	X	X	X	X	X	X	X	X	X
MK 83 or BLU-110 Series	X	X	X	X	X	X	X	X	X
MK 84 or BLU-117 Series	X	X	X	X	X	X	X	X	X
BLU-109 or BLU-116 Series	X	X	X	X	X	X	X	X	X
BLU-126 Series	X	X	X	X	X	X	X	X	X
BLU-129 Series	X	X	X	X	X	X	X	X	X

Figure 2-3-1. Intermediate Level Maintenance Responsibilities for General Purpose Bombs

Cluster Bombs	Receiv-ing Inspec-tion	Storage & Han-dling	Packag-ing & Unpack-aging	Clean-ing	Paint Touchup	Replace-ment of Specified Compo-nents	Assembly & Disas-sembly	Ready Service Inspec-tion	Technical Directives	Defi-ciency Reporting
CBU-78C/B	X	X	X	X	X	X		X	X	X
CBU-99(T-1)B CBU-99B/B CBU-99(T-1)B/B CBU-99(D-1)B/B	X	X	X	X	X	X		X	X	X
CBU-100(T-1)B CBU-100(T-1)A/B CBU-100(T-1)B/B CBU-100(D-1)B/B	X	X	X	X	X	X		X	X	X
SUU-76C/B PDU-5/B	X	X	X	X	X	X	X	X	X	X

Figure 2-3-2. Intermediate Level Maintenance Responsibilities for Cluster Bombs

Fire Bombs	Receiving Inspection	Storage & Handling	Packaging & Unpackaging	Cleaning	Paint Touchup	Assembly & Disassembly	Ready Service Inspection	Technical Directives	Defi-ciency Reporting
MK 77	X	X	X	X	X	X	X	X	X

Figure 2-3-3. Intermediate Level Maintenance Responsibilities for Fire Bombs

JDAM Kits	Receiv-ing Inspec-tion	Storage & Hand-ling	Packag-ing & Unpack-aging	Clean-ing	Testing & Com-ponent Replace-ment	Paint Touch-up	Replace-ment of Specified Compo-nents	Assem-bly & Disas-sembly	Ready Service Inspec-tion	Techni-cal Direc-tives	Defi-ciency Report-ing
KMU-556 Series	X	X	X	X	X	X	X	X	X	X	X
KMU-558 Series	X	X	X	X	X	X	X	X	X	X	X
KMU-559 Series	X	X	X	X	X	X	X	X	X	X	X
KMU-572 Series	X	X	X	X	X	X	X	X	X	X	X
DSU-38 Serieso	X	X	X	X	X	X	X	X	X	X	X

Figure 2-3-4. Intermediate Level Maintenance Responsibilities for Guided Bomb Units (GBUs)

Air Foil Groups (AFG)	Receiv-ing Inspec-tion	Storage & Hand-ling	Packag-ing & Unpack-aging	Clean-ing	Testing & Com-ponent Replace-ment	Paint Touch-up	Replace-ment of Specified Compo-nents	Assem-bly & Disas-sembly	Ready Service Inspec-tion	Techni-cal Direc-tives	Defi-ciency Report-ing
MXU-650 Series	X	X	X	X	X	X	X	X	X	X	X
MXU-651 Series	X	X	X	X	X	X	X	X	X	X	X
MXU-667 Series	X	X	X	X	X	X	X	X	X	X	X
BSU-84 Series	X	X	X	X	X	X	X	X	X	X	X
ADG-770 Series	X	X	X	X	X	X	X	X	X	X	X

Figure 2-3-4. Intermediate Level Maintenance Responsibilities for Guided Bomb Units (GBUs) - contd.

Computer Control Group (CCG)	Receiving Inspection	Storage & Handling	Packaging & Unpackaging	Cleaning	Testing & Component Replacement	Paint Touch-up	Replacement of Specified Components	Assembly & Disassembly	Ready Service Inspection	Technical Directives	Deficiency Reporting
WCU-10 Series	X	X	X	X	X	X	X	X	X	X	X
MAU-169 Series	X	X	X	X	X	X	X	X	X	X	X
MAU-209 Series	X	X	X	X	X	X	X	X	X	X	X
WGU-53 Series	X	X	X	X	X	X	X	X	X	X	X
WGU-39 Series	X	X	X	X	X	X	X	X	X	X	X

Figure 2-3-4. Intermediate Level Maintenance Responsibilities for Guided Bomb Units (GBUs) - contd.

Bomb Bodies	Receiving Inspection	Storage & Handling	Packaging & Unpackaging	Cleaning	Testing & Component Replacement	Paint Touch-up	Replacement of Specified Components	Assembly & Disassembly	Ready Service Inspection	Technical Directives	Deficiency Reporting
MK 80 Series	X	X	X	X	X	X	X	X	X	X	X
BLU-109/117 Series	X	X	X	X	X	X	X	X	X	X	X
BLU-110 Series	X	X	X	X	X	X	X	X	X	X	X
BLU-111/126/129 Series	X	X	X	X	X	X	X	X	X	X	X
BLU-116 Series	X	X	X	X	X	X	X	X	X	X	X

Figure 2-3-4. Intermediate Level Maintenance Responsibilities for Guided Bomb Units (GBUs) - contd.

Practice Bombs	Receiving Inspection	Storage & Handling	Packaging & Unpack-aging	Cleaning	Paint Touchup	Assembly & Disas-sembly	Ready Service Inspection	Technical Directives	Deficiency Reporting
MK 76	X	X	X	X	X	X	X	X	X
BDU-33D/B	X	X	X	X	X	X	X	X	X
BDU-45/B	X	X	X	X	X	X	X	X	X
BDU-48/B	X	X	X	X	X	X	X	X	X
LGTR	X	X	X	X	X	X	X	X	X

Figure 2-3-5. Intermediate Level Maintenance Responsibilities for Practice Bombs

Bomb Fuzes	Receiv-ing Inspec-tion	Storage & Handling	Packaging & Unpackag-ing	Clean-ing	Paint Touchup	Replace-ment of Specified Compo-nents	Assem-bly & Disas-sembly	Ready Service Inspec-tion	Technical Direc-tives	Deficiency Reporting
DSU-33 Series	X	X	X	X				X	X	X
FMU-139 Series	X	X	X	X		X		X	X	X
FMU-140 Series	X	X	X					X	X	X
FMU-143 Series	X	X	X	X		X		X	X	X
MK 339 Series	X	X	X			X		X	X	X
M904 Series	X	X	X	X		X	X[1]	X	X	X
DSU-38 Series	X	X	X	X	X	X		X	X	X

NOTES:

1. Installation of M9 delay element.

Figure 2-3-6. Intermediate Level Maintenance Responsibilities for Bomb Fuzes

Bomb Fins	Receiving Inspec-tion	Storage & Handling	Packag-ing & Unpack-aging	Cleaning	Paint Touchup	Replace-ment of Specified Compo-nents	Assem-bly & Disas-sembly	Ready Service Inspec-tion	Technical Directives	Defi-ciency Reporting
MK 82/ MAU-93 Series (Conical)	X	X	X	X	X	X	X	X	X	X
MK 83 Series (Conical)	X	X	X	X	X	X	X	X	X	X
MK 84 Series (Conical)	X	X	X	X	X	X	X	X	X	X
BSU-33 Series (Conical)	X	X	X	X	X	X	X	X	X	X
BSU-86 Series (Re-tarded)	X	X	X	X	X	X	X	X	X	X
BSU-85 Series (Air)	X	X	X	X	X	X	X	X	X	X

Figure 2-3-7. Intermediate Level Maintenance Responsibilities for Bomb Fins

Aircraft Gun Ammunition	Receiving Inspection	Storage & Handling	Packaging & Unpackaging	Assembly & Disassem-bly	Ready Service Inspec-tion	Technical Direc-tives	Deficiency Reporting
M50 Series 20mm AMMO	X	X	X	X[1,2]	X	X	X
PGU Series 25mm AMMO	X	X	X	X[1,2]	X	X	X
.50 Caliber AMMO	X	X	X	X[1]	X	X	X
7.62mm NATO AMMO	X	X	X	X[1]	X	X	X
PGU Series 20mm AMMO	X	X	X	X[1]	X	X	X

NOTES:

1. Linking and delinking ammunition.
2. Load and unload linkless ammunition carrier.

Figure 2-3-8. Intermediate Level Maintenance Responsibilities for Aircraft Gun Ammunition

Miscellaneous Cartridges & CADs	Receiving Inspection	Storage & Handling	Packaging & Unpackaging	Ready Service Inspection	Technical Directives	Deficiency Reporting
MK 1 Impulse Cartridge	X	X	X	X	X	X
MK 2 Impulse Cartridge	X	X	X	X	X	X
MK 4 Impulse Cartridge	X	X	X	X	X	X
MK 8 Impulse Cartridge	X	X	X	X	X	X
MK 9 Impulse Cartridge	X	X	X	X	X	X
MK 19 Impulse Cartridge	X	X	X	X	X	X
MK 51 Impulse Cartridge	X	X	X	X	X	X
MK 124 Impulse Cartridge	X	X	X	X	X	X
MK 125 Impulse Cartridge	X	X	X	X	X	X
MK 67 Impulse Cartridge	X	X	X	X	X	X
MK 131 Impulse Cartridge	X	X	X	X	X	X
MK 23 Impulse Cartridge	X	X	X	X	X	X
MK 79 Signal	X	X	X	X	X	X

Figure 2-3-9. Intermediate Level Maintenance Responsibilities for Cartridges and Cartridge Actuated Devices (CADs)

Rockets & JATO/ RATO	Receiving Inspec-tion	Storage & Handling	Packag-ing & Unpack-aging	Cleaning	Paint Touchup	Replace-ment of Specified Compo-nents	Assembly & Disas-sembly	Ready Service Inspec-tion	Technical Directives	Defi-ciency Reporting
LAU-10 Launcher	X	X	X	X	X	X	X		X	X
LAU-61 Launcher	X	X	X	X	X	X	X		X	X
LAU-68 Launcher	X	X	X	X	X	X	X		X	X
2.75” Rocket	X	X	X	X	X		X	X	X	X
5.00” Rocket	X	X	X	X	X		X	X	X	X
JATO/ RATO	X	X	X	X	X			X	X	X

Figure 2-3-10. Intermediate Level Maintenance Responsibilities for Rockets, Launchers, and JATO/RATO

Rocket Fuzes	Receiving Inspection	Storage & Handling	Packaging & Unpackaging	Assembly & Disassembly	Ready Service Inspection	Technical Directives	Deficiency Reporting
M414A1/MK 93	X	X	X	X	X	X	X
M423	X	X	X	X	X	X	X
MK 352	X	X	X	X	X	X	X
MK 435	X	X	X	X	X	X	X
BBU-15/B (Adt/Bst)	X	X	X	X	X	X	X

Figure 2-3-11. Intermediate Level Maintenance Responsibilities for Rocket Fuzes

Rocket Warheads	Receiving Inspection	Storage & Handling	Packaging & Unpackag-ing	Cleaning	Assembly & Disassem-bly	Technical Directives	Deficiency Reporting
MK 146	X	X	X	X	X	X	
M156	X	X	X	X	X	X	X
MK 149	X	X	X	X	X	X	X
WDU-4/A	X	X	X	X	X	X	X
MK 6 MOD 7	X	X	X	X	X	X	X

Figure 2-3-12. Intermediate Level Maintenance Responsibilities for Rocket Warheads

Propellant Actuated Devices	Receiving Inspection	Storage & Handling	Packaging & Unpackaging	Cleaning	Technical Directives	Deficiency Reporting
Impulse Cartridge MK 14	X	X	X	X	X	X
Catapult Ejection Seat Cartridge MK 103	X	X	X	X	X	X
MDC Detonator Cord	X	X	X	X	X	X
Rocket Motor MK 76	X	X	X	X	X	X

Figure 2-3-13. Intermediate Level Maintenance Responsibilities for Propellant Actuated Devices (PADs)

Pyrotechnics	Receiving Inspection	Storage & Handling	Packaging & Unpackaging	Assembly & Disassem-bly	Ready Service Inspec-tion	Technical Direc-tives	Deficiency Reporting
LUU-2 Paraflare	X	X	X	X	X	X	X
MK 25 MLM	X	X	X		X	X	X
MK 58 MLM	X	X	X		X	X	X

Figure 2-3-14. Intermediate Level Maintenance Responsibilities for Pyrotechnics

Dispensers	Receiving Inspec-tion	Storage & Handling	Packaging & Unpackaging	Cleaning	Paint Touchup	Replacement of Specified Components	Technical Directives	Deficiency Reporting
SUU-25	X	X	X	X	X	X	X	X

Figure 2-3-15. Intermediate Level Maintenance Responsibilities for Dispensers

Airborne Electronic Warfare Expendable Countermeasures	Receiving Inspection	Storage & Handling	Packaging & Unpackaging	Ready Service Inspection	Technical Directives	Deficiency Reporting
Decoy Flares	X	X	X	X	X	X
Decoy RT-1489/ ALE (GEN-X)	X	X	X	X	X	X
Chaff RR Series	X	X	X	X	X	X

Figure 2-3-16. Intermediate Level Maintenance Responsibilities for Countermeasures

2.3.2.2.3 Accidents or incidents involving weapons or ammunition usually occur during handling, loading and downloading, or when transporting weapons. Handling operations require adherence to safety precautions to ensure personnel safety. All I-level Aviation Ordnance personnel involved in handling weapons will be thoroughly indoctrinated regarding their duties as prescribed by the technical manuals. Supervisors will ensure that technical manuals are adhered to. All handling, including lifting, lowering, storing, and transporting, will be performed utilizing authorized equipment. Any explosive item that is damaged or defective is considered hazardous and must be rejected. The weapon shall be isolated and explosive ordnance disposal personnel summoned to remove the item.

2.3.2.3 Packaging and Unpackaging. Weapon or ordnance item packaging and unpackaging procedures ensure safety, security, and protection from damage of weapons and stores during transfer or shipment. These procedures insure that no damage or moisture intrusion to the ammunition will occur during shipment or storage. A thorough visual inspection is performed to ensure that any safe and arm mechanisms are in the safe position and that no damage or corrosion is evident. I-level Aviation Ordnance personnel will perform packaging or unpackaging procedures in accordance with the applicable work packages in the technical manuals for the ordnance items concerned.

2.3.2.4 Cleaning. Cleaning consists of the removal of contaminants such as dirt, grease, salt spray, oil, and other elements that aid corrosion. Cleaning requires a knowledge of the materials and methods needed to remove each of these contaminants. As a general rule, the mildest cleaning method available that will work effectively is used. NAVAIR 01-1A-75 addresses the authorized materials, applications, and procedures for preventive and corrective corrosion control measures for airborne ordnance/ammunition. Specifically, the NAVAIR 01-1A-75 addresses the procedures to be followed for each type of substrate (metallic and nonmetallic) to be cleaned, as well as the proper material to be used.

2.3.2.5 Paint Touchup. Painting at the I-level is required to touch up areas which have been damaged by abrasion, superficial scratches, or in areas where the paint has been removed in order to treat corrosion. I-level maintenance personnel clean all surfaces before applying the coating, ensuring that no cleaning material residue is trapped in fasteners, points, etc.; these areas can become contaminated and corrosion will occur. While material such as oils and sealants act as a preservative, painting is generally the most effective means of preserving metal. NAVAIR 01-1A-75 lists the cleaning materials, primers, and paints used in the preservation and corrosion control of airborne ordnance/ammunition. Painting requirements that exceed the criterion specified in the applicable technical manual and NAVAIR 01-1A-75 must be performed at Depot level maintenance activities in an authorized painting area (usually an enclosed paint booth).

2.3.2.6 Marking. I-level repair facility personnel re-stencil all markings obliterated or removed during repair or painting in accordance with the applicable authorized technical manual, and NAVAIR 01-1A-75.

2.3.2.7 Preservation. Corrosion preventive compounds, adhesives, and sealants shall be applied only when inspection results warrant and during maintenance procedures when replacement parts require it. Corrosion preventive compounds, adhesives, and sealants are applied using approved materials and methods listed in accordance with the applicable authorized technical manuals, and NAVAIR 01-1A-75.

2.3.2.8 Lubrication. I-Level repair personnel perform lubrication in accordance with the applicable authorized technical manual using the lubricants authorized in NAVAIR 01-1A-75.

2.3.2.9 Replacement of Specified Components. I-level Aviation Ordnance personnel are responsible for performing corrective maintenance to return repairable items to service. This maintenance is normally accomplished on items such as laser guided bombs, and aircraft parachute flare dispensers. This consists of replacement of defective parts, assemblies, fuzes, and the repair and testing of ordnance material and components. Parachute flare dispensers require maintenance and replacement of internal parts, breech cap replacement, or skin patching. Launchers and dispensers are also electrically tested at the Intermediate level. I-level maintenance manuals provide step-by-step procedures to accomplish these tasks.

2.3.2.10 Assembly and Disassembly. Assembly is an operation or series of operations that transform a weapon or item of ordnance from the configuration in which it is normally stored to the required flight configuration. I-level Aviation Ordnance personnel assemble weapons and stores for issue to organizational activities. These operations include unpackaging the weapons and components, installing boosters, electric fuzes and fins on low drag general purpose bombs, assembling rocket fuzes, warheads and motors, and loading the assembled rounds into launchers, loading aircraft parachute flares into dispensers, and loading gun ammunition into linkless ammunition loading systems prior to delivery to user activities. Weapons returned to I-level activities are disassembled and returned to storage.

2.3.2.11 Ready Service Inspection. A ready service inspection is an inspection of a weapon that has been removed from its container, prepared for use, and placed in a ready service magazine prior to issue to a user activity. The inspection is performed by the I-level personnel responsible for issuing the weapon. A ready service inspection consists of inspecting the weapon for proper configuration, damage, loose or missing components, corrosion or other conditions that would render the weapon unsafe or hazardous. Shelf and service life of cartridge actuated devices, aircrew escape propulsion systems, and cartridges will also be checked during ready service inspections. A weapon that is determined to be not ready-for-issue shall be rejected and the proper authority notified.

2.3.2.12 Technical Directives (TDs). I-level Aviation Ordnance personnel are responsible for assuring that TDs such as Notices of Ammunition Reclassification (NARs) and Airborne Weapon Bulletins (AWBs) directed to that level are complied with.

2.3.2.13 Deficiency Reporting. Deficiency reports are initiated at I-level maintenance when a deficiency is discovered during the performance of any of the assigned intermediate maintenance actions. Deficiency reporting procedures are contained in Volume I, Chapter 4.6.

2.3.2.14 Testing.

2.3.2.14.1 Joint Direct Attack Munition (JDAM)/Laser Joint Direct Attack Munition (LJDAM)/ Dual Mode Laser Guided Bomb (DMLGB) Built-In-Test (BIT)/Reprogramming. I-level maintenance is responsible for JDAM/LJDAM/DMLGB BIT/Reprogramming functions. JDAM/LJDAM/ DMLGB BIT testing will be required for the following situations:

a. During weapons assembly.

b. There has been an on-aircraft failure.

c. Prior to storage after disassembly of the KMU JDAM tail kit/WGU-53/B DMLGB kit.

d. At the end of a deployment/detachment (Ashore/Afloat). Using the Common Munitions BIT Reprogramming Equipment (CMBRE) utility feature, download the maintenance log file of all broken out KMU JDAM tail kits and WGU-53/B DMLGB kits and provide maintenance log file data to the Cognizant Field Activity (CFA) via the All Weapons Information System (AWIS) CMBRE module. JDAM/LJDAM/DMLGB BIT/Reprogramming will be required as directed by the TD/Airborne Software Change (ASC).

2.3.3 Record Keeping and Reporting. I-level maintenance is responsible for ordnance and ammunition record keeping and reporting for both Organizational maintenance and Intermediate maintenance. Weapons or stores expended by organizational activities are reported to the I-level maintenance activity for entry into the Ordnance Information System (OIS).

2.3.4 Requisitioning.

2.3.4.1 All ammunition necessary to support the ship's allowance, cargo, load, and air wing training requirements will be ordered by the Weapons Department. The Weapons Officer shall ensure timely submission of ammunition requisitions to meet planned operations. The Weapons Officer shall submit requisitions as provided in the current revisions of NAVSUP P-724. All requisitions for conventional ammunition not to be filled from in-theater assets are sent to the Naval Inventory Control Point (ICP). Include the Inventory Manager (IM) as an information addressee in requisitions for non-Fleet assets sent via administrative message.

2.3.4.2 All ammunition listed on the daily ordnance load plan will be issued automatically to support flight operations. Ammunition not included in the load plan (cartridge actuated devices, small arms, etc.) will be issued in the following manner: the requisitioning squadron or department shall submit a DD 1348 to the Weapons Department, indicating the type, Naval Ammunition Logistics Code (NALC), quantity, and desired issue time. Upon arrival, the ammunition may be picked up at the designated delivery point, depending on the type and quantity of ammunition. Personnel picking up the ammunition shall be qualified and certified in accordance with applicable instructions. The air wing commander will provide a listing of certified personnel to the aviation weapons movement control station immediately upon embarkation of the air wing.

CHAPTER 2.4

Depot Level Maintenance

Table of Contents

Paragraph	Subject	Page
2.4.1	General	2-4-1
2.4.2	Industrial Maintenance Processing	2-4-1
2.4.3	Explosive Maintenance or Rework	2-4-12
2.4.4	Record Keeping and Reporting	2-4-14

List of Illustrations

Figure	Title	Page
2-4-1	Industrial Depot Level Maintenance Responsibilities for General Purpose Bombs	2-4-2
2-4-2	Industrial Depot Level Maintenance Responsibilities for Cluster Bombs	2-4-2
2-4-3	Industrial Depot Level Maintenance Responsibilities for Fire Bombs	2-4-2
2-4-4	Industrial Depot Level Maintenance Responsibilities for Guided Bomb Units (GBUs)	2-4-3
2-4-5	Industrial Depot Level Maintenance Responsibilities for Practice Bombs	2-4-5
2-4-6	Industrial Depot Level Maintenance Responsibilities for Bomb Fuzes	2-4-5
2-4-7	Industrial Depot Level Maintenance Responsibilities for Bomb Fins	2-4-5
2-4-8	Industrial Depot Level Maintenance Responsibilities for Aircraft Gun Ammunition	2-4-6
2-4-9	Industrial Depot Level Maintenance Responsibilities for Cartridges and Cartridge Actuated Devices (CADs)	2-4-6
2-4-10	Industrial Depot Level Maintenance Responsibilities for Rockets, Launchers, and JATO/RATO	2-4-7

List of Illustrations - contd.

Figure	Title	Page
2-4-11	Industrial Depot Level Maintenance Responsibilities for Rocket Fuzes	2-4-7
2-4-12	Industrial Depot Level Maintenance Responsibilities for Rocket Warheads	2-4-7
2-4-13	Industrial Depot Level Maintenance Responsibilities for Propellant Actuated Devices (PADs)	2-4-8
2-4-14	Industrial Depot Level Maintenance Responsibilities for Pyrotechnics	2-4-8
2-4-15	Industrial Depot Level Maintenance Responsibilities for Dispensers	2-4-8
2-4-16	Industrial Depot Level Maintenance Responsibilities for Countermeasures	2-4-8
2-4-17	Industrial Depot Level Maintenance Responsibilities for Signals, Underwater Sound (SUS)	2-4-8
2-4-18	Maintenance Functions and Capabilities for NAVAIRSYSCOM Pyrotechnic Devices	2-4-9
2-4-19	Assignment of Airborne Ordnance and Ammunition Responsibilities to Explosive-Capable Depot Level Activities	2-4-10
2-4-20	Explosive-Capable Depot Level Maintenance Responsibilities for Ordnance/Ammunition	2-4-10

CHAPTER 2.4

Depot Level Maintenance

2.4.1 General. This chapter discusses the ordnance and ammunition maintenance actions authorized to be performed by assigned weapons support facilities and industrial maintenance establishments. Depot level (D-level) maintenance is conducted by two types of industrial establishments that are assigned specific maintenance actions in support of airborne ordnance and ammunition. Both types of establishments provide technical assistance in carrying out those functions that are beyond the responsibility or capability of the Organizational or Intermediate levels. The first group of assigned activities include Naval Weapons Stations (NWS) and Navy Munitions Command (NMC) Detachments Earle, Seal Beach, Fallbrook, and Yorktown; Army Ammunition Plant Hawthorne; Naval Undersea Warfare Center Division; NMC Detachment Indian Island; and Army Ammunition Plant McAlester. Those activities are authorized to perform industrial type maintenance actions, such as shipment, storage, testing, cleaning, and repair actions on airborne ordnance and ammunition. The second group, which consists of various assigned industrial establishments, perform those actions required to maintain or restore the inherent design service levels of performance, reliability, and material condition; they span complete rebuild through reclamation, refurbishment, overhaul, repair, replacement, adjustment, servicing, and replacement of consumables. Those tasks are performed to the extent specified in applicable Maintenance Instruction Manuals (MIMs), operating and service instructions, or Technical Directives (TDs).

2.4.2 Industrial Maintenance Processing. Industrial maintenance activities perform those functions of storage, testing, maintenance, and repair on airborne ordnance and ammunition that are beyond the capabilities of lower level maintenance activities. Figures 2-4-1 through 2-4-17 assign the industrial maintenance actions performed on the airborne ordnance and ammunition. Assigned maintenance actions are described generally in Paragraphs 2.4.2.1 through 2.4.2.11. All maintenance actions are performed in accordance with approved technical manuals developed for each item or family of airborne ordnance and ammunition. The following is an explanation of the functions listed in the matrix.

2.4.2.1 Receiving Inspection. Receiving inspections are conducted by industrial establishment maintenance personnel and include inspection of containers, cradles, palletized ammunition, and all Fleet returned ammunition received by or inducted into an industrial activity. Containers and cradles are inspected for correct markings, corrosion, moisture intrusion, and damage. A container or cradle that is dented, crushed, punctured, or appears to have been tampered with must be opened, and its contents must be inspected. Receiving inspections shall be conducted in accordance with applicable technical manuals.

2.4.2.2 Storage. All weapons, ordnance, and ordnance components will be stored by personnel in accordance with procedures outlined in NAVSEA OP 4, NAVSEA OP 5. Magazines used for storage of airborne ordnance and ammunition at industrial activities will be sufficiently remote from inhabited areas to confine the risks involved in storing ammunition primarily to the

General Purpose Bombs	Receiving Inspection	Storage	Cleaning	Repair & Patch Thermal Coating	Testing & Component Replace-ment	Technical Directives	Deficiency Reporting
MK 82	X	X	X	X	X	X	X
MK 83	X	X	X	X	X	X	X
MK 84	X	X	X	X	X	X	X
BLU-109 Series	X	X	X	X	X	X	X
BLU-110 Series	X	X	X	X	X	X	X
BLU-111 Series	X	X	X	X	X	X	X
BLU-116 Series	X	X	X	X	X	X	X
BLU-117 Series	X	X	X	X	X	X	X
BLU-129 Series	X	X	X		X	X	X

Figure 2-4-1. Industrial Depot Level Maintenance Responsibilities for General Purpose Bombs

Cluster Bombs	Receiving Inspection	Storage	Cleaning	Repair & Patch Thermal Coating	Testing & Component Replace-ment	Technical Directives	Deficiency Reporting
CBU-78C/B	X	X	X	X	X	X	X
CBU-99(T-1)B CBU-99B/B CBU-99(T-1)B/B CBU-99(D-1)B/B	X	X	X	X	X	X	X
CBU-100(T-1)B CBU-100(T-1)B/B CBU-100(D-1)B/B	X	X	X	X	X	X	X
SUU-76C/B PDU-5/B	X	X	x	X	X	X	X

Figure 2-4-2. Industrial Depot Level Maintenance Responsibilities for Cluster Bombs

Fire Bombs	Receiving Inspection	Storage	Cleaning	Technical Directives	Deficiency Reporting
MK 77	X	X	x	X	X

Figure 2-4-3. Industrial Depot Level Maintenance Responsibilities for Fire Bombs

JDAM Kits	Receiving Inspection	Storage	Cleaning	Testing and Component Replacement	Technical Directives	Deficiency Reporting
KMU-556 Series	X	X	X	X	X	X
KMU-558 Series	X	X	X	X	X	X
KMU-559 Series	X	X	X	X	X	X
KMU-572 Series	X	X	X	X	X	X
DSU-38 Series	X	X	X	X	X	X

Figure 2-4-4. Industrial Depot Level Maintenance Responsibilities for Guided Bomb Units (GBUs)

Air Foil Groups (AFG)	Receiving Inspection	Storage	Cleaning	Testing and Component Replacement	Technical Directives	Deficiency Reporting
MXU-650 Series	X	X	X	X	X	X
MXU-651 Series	X	X	X	X	X	X
MXU-667 Series	X	X	X	X	X	X
BSU-84 Series	X	X	X	X	X	X
ADG-770 Series	X	X	X	X	X	X

Figure 2-4-4. Industrial Depot Level Maintenance Responsibilities for Guided Bomb Units (GBUs) - contd.

Computer Control Group (CCG)	Receiving Inspection	Storage	Cleaning	Testing and Component Replacement	Technical Directives	Deficiency Reporting
WCU-10 Series	X	X	X	X	X	X
MAU-169 Series	X	X	X	X	X	X
MAU-209 Series	X	X	X	X	X	X
WGU-53 Series	X	X	X	X	X	X
WGU-39 Series	X	X	X	X	X	X

Figure 2-4-4. Industrial Depot Level Maintenance Responsibilities for Guided Bomb Units (GBUs) - contd.

Bomb Bodies	Receiving Inspection	Storage	Cleaning	Repair and Patch Thermal Coating	Testing and Component Replace-ment	Technical Directives	Deficiency Reporting
MK 80 Series	X	X	X	X	X	X	X
BLU-109/117 Series	X	X	X	X	X	X	X
BLU-110 Series	X	X	X	X	X	X	X
BLU- 111/126 Series	X	X	X	X	X	X	X
BLU-116 Series	X	X	X		X	X	X
BLU- 129 Series	X	X	X		X	X	X

Figure 2-4-4. Industrial Depot Level Maintenance Responsibilities for Guided Bomb Units (GBUs) - contd.

Practice Bombs	Receiving Inspection	Storage	Technical Directives	Deficiency Reporting
MK 76	X	X	X	X
BDU-33D/B	X	X	X	X
BDU-45/B	X	X	X	X
BDU-48/B	X	X	X	X
LGTR	X	X	X	X

Figure 2-4-5. Industrial Depot Level Maintenance Responsibilities for Practice Bombs

Bomb Fuzes	Receiving Inspection	Storage	Technical Directives	Deficiency Reporting
DSU-33 Series	X	X	X	X
FMU-139 Series	X	X	X	X
FMU-140 Series	X	X	X	X
FMU-143 Series	X	X	X	X
MK 339 Series	X	X	X	X
M904 Series	X	X	X	X

Figure 2-4-6. Industrial Depot Level Maintenance Responsibilities for Bomb Fuzes

Bomb Fins	Receiving Inspection	Storage	Cleaning	Testing & Component Replacement	Technical Directives	Deficiency Reporting
MK 82/MAU-93 Series (Conical)	X	X	X	X	X	X
MK 83 Series (Conical)	X	X	X	X	X	X
MK 84 Series (Conical)	X	X	X	X	X	X
BSU-33 Series (Conical)	X	X	X	X	X	X
BSU-86 Series (Retarded)	X	X	X	X	X	X
BSU-85 Series (Air)	X	X	X	X	X	X

Figure 2-4-7. Industrial Depot Level Maintenance Responsibilities for Bomb Fins

Aircraft Gun Ammunition	Receiving Inspection	Storage	Cleaning	Technical Directives	Deficiency Reporting
M50 Series 20mm AMMO	X	X	X	X	X
PGU Series 25mm AMMO	X	X	X	X	X
.50 Caliber AMMO	X	X	X	X	X
7.62mm NATO AMMO	X	X	X	X	X
PGU Series 20mm AMMO	X	X	x	X	X

Figure 2-4-8. Industrial Depot Level Maintenance Responsibilities for Aircraft Gun Ammunition

Miscellaneous Cartridges and CADS	Receiving Inspection	Storage	Technical Directives	Deficiency Reporting
MK 1 Impulse Cartridge	X	X	X	X
MK 2 Impulse Cartridge	X	X	X	X
MK 4 Impulse Cartridge	X	X	X	X
MK 8 Impulse Cartridge	X	X	X	X
MK 9 Impulse Cartridge	X	X	X	X
MK 19 Impulse Cartridge	X	X	X	X
MK 51 Impulse Cartridge	X	X	X	X
MK 124 Impulse Cartridge	X	X	X	X
MK 125 Impulse Cartridge	X	X	X	X
MK 67 Impulse Cartridge	X	X	X	X
MK 131 Impulse Cartridge	X	X	X	X
MK 23 Impulse Cartridge	X	X	X	X
MK 79 Signal	X	X	X	X

Figure 2-4-9. Industrial Depot Level Maintenance Responsibilities for Cartridges and Cartridge Actuated Devices (CADs)

Rockets and JATO/RATO	Receiving Inspection	Storage	Cleaning	Repair & Patch Thermal Coating	Testing & Component Replace-ment	Technical Directives	Deficiency Reporting
LAU-10 Launcher	X	X	X	X	X	X	X
LAU-61 Launcher	X	X	X	X	X	X	X
LAU-68 Launcher	X	X	X	X	X	X	X
2.75” Rocket	X	X	X		X	X	X
5.00” Rocket	X	X	X		X	X	X
JATO/RATO	X	X	x		X	X	X

Figure 2-4-10. Industrial Depot Level Maintenance Responsibilities for Rockets, Launchers, and JATO/RATO

Rocket Fuzes	Receiving Inspection	Storage	Technical Directives	Deficiency Reporting
M414A1/MK 93	X	X	X	X
M423	X	X	X	X
MK 352	X	X	X	X
MK 435	X	X	X	X
BBU-15/B (Adt/Bst)	X	X	X	X

Figure 2-4-11. Industrial Depot Level Maintenance Responsibilities for Rocket Fuzes

Rocket Warheads	Receiving Inspection	Storage	Technical Directives	Deficiency Reporting
MK 146	X	X	X	X
M156	X	X	X	X
MK 149	X	X	X	X
WDU-4A	X	X	X	X
MK 6 MOD 7	X	X	X	X

Figure 2-4-12. Industrial Depot Level Maintenance Responsibilities for Rocket Warheads

Propellant Actuated Devices	Receiving Inspection	Storage	Technical Directives	Deficiency Reporting
Impulse Cartridge	X	X	X	X
Catapult Ejection Seat Cartridge M397	X	X	X	X
SM/FC Detonating Cord	X	X	X	X
Rocket Motor	X	X	X	X

Figure 2-4-13. Industrial Depot Level Maintenance Responsibilities for Propellant Actuated Devices (PADs)

Pyrotechnics	Receiving Inspection	Storage	Testing & Component Replacement	Technical Directives	Deficiency Reporting
LUU-2 Paraflare	X	X	X	X	X
MK 25 MLM	X	X	X	X	X
MK 58 MLM	X	X	X	X	X

Figure 2-4-14. Industrial Depot Level Maintenance Responsibilities for Pyrotechnics

Dispensers	Receiving Inspection	Storage	Cleaning	Repair & Patch Thermal Coating	Testing & Component Replace-ment	Technical Directives	Deficiency Reporting
SUU-25	X	X	x	X	X	X	X

Figure 2-4-15. Industrial Depot Level Maintenance Responsibilities for Dispensers

Airborne Electronic Warfare Expendable Countermeasures	Receiving Inspection	Storage	Technical Directives	Deficiency Reporting
Decoy Flares	X	X	X	X
Decoy RT-1489/ALE (GEN-X)	X	X	X	X
Chaff RR Series	X	X	X	X

Figure 2-4-16. Industrial Depot Level Maintenance Responsibilities for Countermeasures

Signals, Underwater Sound	Receiving Inspection	Storage	Technical Directives	Deficiency Reporting
SUS	X	X	X	X

Figure 2-4-17. Industrial Depot Level Maintenance Responsibilities for Signals, Underwater Sound (SUS)

Function/Capability	NMC CONUS East Division Detachment Earle	NMC CONUS East Division Detachment Charleston	Hawthorne AAP	NWS Concord	Crane AAA	NMC CONUS West Division Detachment Indian Island	NMC CONUS West Division Detachment Seal Beach	McAlester AAP	NMC CONUS East Division Detachment Yorktown
Facilities with Conductive Flooring	X	X	X	X	X	X	X	X	X
Temperature and Humidity Controlled Environment			X	X	X			X	
Class I, Div 3 Explosives Storage Capacity (250,000 lbs or more)	X	X	X	X	X	X	X	X	X
Class I, Div 3 Explosives Storage Capacity (5,000 lbs or more)	X	X	X	X	X	X	X	X	X
Temperature and Humidity			X	X	X	X	X	X	
Aircraft Vibration				X	X	X			
Pyrotechnic Function Test Facilities (Illumination Candles/ Smoke Signals)			X		X	X	X		
Seal/Leak Testing			X	X	X	X	X	X	
X-Ray			X	X	X	X	X	X	X
Illumination Candle-Power Measurement/Recording					X	X	X		
Simulated Altitude Function Test-ing for Infrared Flares					X	X			
Infrared Function Testing (Infrared data/burn time recording)					X	X			
Infrared Equipment Calibration				X	X	X			
Tool Design and Fabrication	X	X	X		X	X	X	X	X
Container Repair	X	X	x		X	X	X	X	X

Figure 2-4-18. Maintenance Functions and Capabilities for NAVAIRSYSCOM Pyrotechnic Devices

Munition	NAVSURF-WARCENDIV Indian Head	Naval Ammunition Depot Crane	Army Ammunition Plant Hawthorne	OaklandNaval Munitions Command Seal Beach (NAVMAG Indian Island)
FAE CBU-72/B			X	
GATOR CBU-78			X	
ROCKEYE		X		
LGBs			X	X
AEPS	X			
JATO/RATO	X			
Pyrotechnics	X			
Rocket Motors	X			

Figure 2-4-19. Assignment of Airborne Ordnance and Ammunition Responsibilities to Explosive-Capable Depot Level Activities

Munition	Renovation & Repair	Incorporation of Design Changes	Inspect & Test	Manufacture of Parts & Kits	Explosive Refilling	X-Ray of Components	Corrosion Control & Preservation	Demilitarization of Ammunition
GATOR (CBU-78)	X	X	X	X	X	X	X	X
ROCKEYE	X	X	X	X	X		X	X
Guided Bomb Units	X	X	X	X	X	X	X	X
AEPS	X	X	X	X	X	X	X	X
JATO/RATO			X	X	X	X	X	X
Pyrotechnics				X	X	X		
Rocket Motors			x		X	X	X	

Figure 2-4-20. Explosive-Capable Depot Level Maintenance Responsibilities for Ordnance/Ammunition

magazine area. Separate magazine storage will be provided for high explosives, fuzes and detonators, small arms ammunition, and chemical and smoke munitions. All magazines will be properly marked with placards showing the type of ordnance and ammunition stored therein. Movement of ordnance and ammunition in the magazine area will be accomplished using approved handling and moving equipment and all explosive drivers will be properly licensed. Industrial maintenance establishments ship ordnance and ammunition in response to direction by higher authority. The procedures and inspections incident to ammunition and explosives loading and shipment are prescribed in NAVSEA SW020-AC-SAF-010 (Transportation and Storage Data for Ammunition, Explosives and Related Hazardous Materials) and NAVSEA SW020-AF-ABK-010 (Motor Vehicle and Railcar Shipping Inspector's Manual for Ammunition, Explosives, and Other Hazardous Materials). The regulations of the Department of Transportation apply to all motor vehicle carriers transporting ammunition and explosives in interstate or foreign commerce. Additional safety requirements governing intrastate shipments may be imposed by the individual states and by municipalities through which shipments will move. Navy vehicles transporting ammunition and explosives are subject to all safety regulations applicable to common carriers, as well as to the regulations of the Department of the Navy. Van type trucks and semitrailers are the preferred types of vehicles for transporting ammunition and explosives. Open-top, stake-body, or flatbed vehicles are acceptable for use (and preferred for the shipment of large crated items). Motor vehicles that transport ammunition and explosives shall conspicuously display placards in accordance with NAVSEA SW020-AF-ABK-010. The placards shall be located on each side, on the front, and on the rear. The placards shall be attached in such a way that they can be removed or covered whenever the vehicle is not loaded with ammunition or explosives. On-station vehicles engaged in towing explosive-loaded bomb trailers shall be appropriately placarded.

2.4.2.3 Cleaning. Cleaning consists of the removal of contaminants such as dirt, salt spray, and other elements that aid corrosion. Cleaning requires a knowledge of the materials and methods needed to remove each of these contaminants. As a general rule, the mildest cleaning method available that will work effectively is used. NAVAIR 01-1A-75 addresses the authorized materials, applications, and procedures for preventive and corrective corrosion control measures for airborne ordnance/ammunition. Specifically, the NAVAIR 01-1A-75 addresses the procedures to be followed for each type of substrate (metallic and nonmetallic) to be cleaned, as well as the proper material to be used.

2.4.2.4 Paint Touchup. Ordnance and ammunition are subject to preservation and painting procedures as part of D-level maintenance. Industrial maintenance personnel clean all surfaces before applying the coating, ensuring that no cleaning material residue is trapped in fasteners, points, etc., these areas can become contaminated easily and corrosion will occur. While material such as oils and sealants act as a preservative, painting is generally the most effective means of preserving metal. The corrosion manual lists the cleaning materials, primers, and paints used in preservation and corrosion control.

2.4.2.5 Marking. D-level maintenance personnel re-stencil all markings obliterated or removed during repair or painting in accordance with the applicable authorized technical manual, and NAVAIR 01-1A-75.

2.4.2.6 Preservation. Corrosion preventive compounds, adhesives, and sealants shall be applied only when inspection results warrant and during maintenance procedures when replacement parts

require it. Corrosion preventive compounds, adhesives, and sealants are applied using approved materials and methods listed in accordance with the applicable authorized technical manuals, and NAVAIR 01-1A-75.

2.4.2.7 Lubrication. D-level maintenance personnel perform lubrication in accordance with the applicable authorized technical manual using the lubricants authorized in NAVAIR 01-1A-75.

2.4.2.8 Repair and Patch Thermal Coating. Thermal coating of weapons provides protection from heat and extends cookoff times when weapons are exposed to flames. This coating can be damaged by rough handling and must be patched or replaced. Industrial establishments have the capability to accomplish this action and will do so when an inspection determines that a bomb, launcher, or dispenser has sustained chipping or peeling of the thermal coating sufficient to degrade the designed cookoff time. Personnel must use extreme caution while storing, mixing, or applying the thermal coating material. Refer to the applicable technical manual and NAVAIR 01-1A-75 for storage, mixing, patching procedures and the rejection criteria for thermal coating missing from a weapon.

2.4.2.9 Testing and Component Replacement. Industrial establishments are responsible for testing ordnance and ammunition to determine necessary corrective maintenance actions. Laser guided bomb computer control groups returned to a D-level activity are tested to determine their condition. Rocket launchers and parachute flare dispensers repaired at D-level activities are tested for proper operation. Pyrotechnic devices are routinely tested as part of an ongoing quality control program. Figure 2-4-18 depicts the current functions and capabilities of industrial establishments that conduct these tests. Components found to be defective, worn, or damaged during inspection or test will be replaced, and the end item concerned will be retested to ensure the item is ready-for-issue before being returned to service.

2.4.2.10 Technical Directives (TDs). Industrial maintenance personnel are not only responsible for assuring that TDs, Airborne Weapon Bulletins (AWBs), Airborne Weapon Changes (AWCs), and Notices of Ammunition Reclassification (NARs) are complied with, but they also assist in the development and verification of TDs ultimately affect them. This assistance includes engineering change proposal review, development of the resulting TD, and verification prior to implementation of the TD.

2.4.2.11 Deficiency Reporting. Deficiency reports are initiated when a deficiency is discovered during performance of any of the assigned maintenance actions. Deficiency reporting procedures are contained in Volume I, Chapter 4.6, of this manual.

2.4.3 Explosive Maintenance or Rework. Activities assigned to perform explosive D-level maintenance are listed in Figure 2-4-19. Figure 2-4-20 depicts assigned maintenance actions for these activities. Maintenance actions include: (1) Maintenance and modification required for the rework and repair of airborne ordnance and ammunition; (2) manufacture of items and component parts otherwise not available when action is deemed necessary and is appropriately authorized; and (3) provision of support services functions, including professional engineering, technology, and calibration services, and field teams to support Organizational and Intermediate level maintenance when required and directed. Following are those maintenance actions generally performed by explosive-capable maintenance establishments. Because of the wide variety of

tasks accomplished by the activities, only major functions are discussed. Assigned maintenance actions are described generally in Paragraphs 2.4.3.1 through 2.4.3.8.

2.4.3.1 Renovation and Repair. Explosive-capable personnel perform renovation and repair, which is the reworking of a munition to return it to ready-for-issue status. It includes replacing worn or defective parts, repairing damaged components, and installing new components to replace those whose service life has expired. It also includes packaging and palletizing items for shipment and storage.

2.4.3.2 Incorporation of Design Changes. Explosive maintenance or rework also includes all modification actions required to change or improve design levels of performance, reliability, and material. The term modification, as used in this manual, includes alteration, conversion, engineering change, modernization, etc.

2.4.3.3 Inspect and Test. Ordnance items or weapons, which have been renovated or modified by an explosive capable maintenance activity, are inspected and tested as required to assure the quality and accuracy of the work accomplished. Ordnance items which have been sent to explosive-capable maintenance activities for testing include items which have failed a test at an industrial D-level establishment, such as a NWS or NMC Detachment, and require testing on more sophisticated equipment to determine their actual condition. Items that are under manufacturer's warranty may be inspected only to the extent allowed by the warranty provisions as specified in the applicable technical publications or other appropriate directives.

2.4.3.4 Manufacture of Parts and Kits. Design changes or improvements in weapons or ordnance items require new parts or change kits to be manufactured and provided to industrial D-level activities, along with Intermediate or Organizational level maintenance activities for on-site incorporation.

2.4.3.5 Explosive Refilling. Weapons or weapon components which contain explosives with limited service life are returned to explosive-capable D-level maintenance activities at service life expiration for renovation and refilling. Upon accomplishment of the refilling process, the items are reissued with a new service life expiration date.

2.4.3.6 X-Ray of Components. Most ordnance items require periodic inspection of internal conditions by means of X-Ray. That method of inspection is usually done by explosive-capable personnel on items such as rocket motors to ensure the integrity of the propellant grain. Other weapons may require X-Ray inspection if there is suspicion that the weapon has been dropped or damaged to the extent that internal damage may have occurred.

2.4.3.7 Corrosion Control and Preservation. Explosive-capable maintenance activities perform both minor and major corrosion control treatment on weapons and ordnance related items. Routine corrosion control is performed on all items that pass through the Depot as part of the normal process. Items which are returned to the Depot and are determined to be severely deteriorated are, if economically feasible, given extensive corrosion control treatment to return them to ready-for-issue stock. Painting and preservation of items is done to the extent required by the Depot maintenance requirements for the particular item, and type preservation required for the item. NAVAIR 01-1A-75 addresses the D-level authorized materials, applications, and procedures for preventive and corrective corrosion control measures of airborne ordnance/ammunition.

2.4.3.8 Demilitarization of Ammunition. Demilitarization is the act of destroying the military offensive or defensive capability of that ammunition. Explosive maintenance activities carry out this task by cutting, crushing, scrapping, melting, dumping at sea, burning, or exploding ammunition to prevent further use of the item for its originally intended military purpose.

2.4.4 Record Keeping and Reporting. Depot level maintenance is responsible for all record keeping and reporting actions related to testing and processing ordnance and ammunition. The Maintenance Data System (MDS) and Ordnance Information System (OIS) are described in Volume II, Section 2, of this manual.

SECTION 3

Aircraft Guns and Laser Aiming Devices

Table of Contents

Chapter	Subject	Page
3.1	Introduction	3-1-1
3.2	Organizational Level Maintenance	3-2-1
3.3	Intermediate Level Maintenance	3-3-1
3.4	Depot Level Maintenance	3-4-1

CHAPTER 3.1

Introduction

Table of Contents

Paragraph	Subject	Page
3.1.1	General	3-1-1
3.1.2	Responsibilities	3-1-1
3.1.3	Applicability	3-1-1
3.1.4	Maintenance Philosophy	3-1-4
3.1.5	Physical Security	3-1-5
3.1.6	Aeronautical Equipment Service Record (AESR) (OPNAV 4790/29) and Equipment Logbooks	3-1-5
3.1.7	Gun System Allowances and Disposition	3-1-13
3.1.8	Small Arms Allowances and Disposition	3-1-14
3.1.9	Maintenance Planning	3-1-14
3.1.10	Guns Inventory Tracking and Reporting (GITR) System	3-1-14
3.1.11	Laser Aiming Devices (LADs)	3-1-15

List of Illustrations

Figure	Title	Page
3-1-1	Aircraft Gun System Application	3-1-2
3-1-2	AESR/Equipment Logbook Forms Matrix	3-1-6
3-1-3	AESR Construction Sequence	3-1-9
3-1-4	Equipment Logbooks Construction Sequence	3-1-11
3-1-5	Laser Application	3-1-17

CHAPTER 3.1

Introduction

3.1.1 General. This section addresses maintenance program management of aircraft guns and gun systems. Maintenance program management, during a weapon system's deployment life cycle phase, is a critical management function due to the impact of maintenance requirements on the effective use of personnel, materials, facilities, and fiscal resources. Maintenance program management functions include maintenance planning, coordinating, budgeting, and evaluating program progress. Aircraft guns are assigned a two-digit Navy stock number prefix that identifies technical and inventory management responsibilities. Aircraft guns are assigned cognizance code 6B and are under the technical cognizance of the Commander, Naval Air Systems Command (COMNAVAIRSYSCOM). Inventory management responsibilities are assigned to NAVSUP WSS, Mechanicsburg, PA.

3.1.2 Responsibilities.

3.1.2.1 The Assistant Commander for Fleet Support and Field Activity Management, through the Logistics Management Division, is responsible for the program management and funding of airborne weapons maintenance programs. COMNAVAIRSYSCOM is responsible for management, integrated logistics support, and maintenance engineering functions pertinent to airborne weapon systems under COMNAVAIRSYSCOM cognizance.

3.1.2.2 Assistant Program Managers, Logistics (APMLs) plan and implement integrated logistics support and project support management activities for major weapon systems. APMLs are responsible directly to weapon system Program Managers (PMs) and air-to-air program coordinators for logistics aspects of acquisition programs from inception through deployment and eventual phaseout from the active inventory. APMLs are directly responsible to the director for the effective planning and development of operationally effective and cost-effective support systems for acquisition programs.

3.1.2.3 Volume I, Chapter 2.2 defines maintenance functions that apply to aircraft guns and gun systems. Volume I, Chapter 2.3, assigns maintenance responsibilities that apply to aircraft guns and gun systems. Chapters 3.2 through 3.4 of this volume describe Organizational, Intermediate, and Depot level maintenance actions that apply to aircraft guns and gun systems.

3.1.3 Applicability. This section applies to the aircraft guns and gun systems described below. Figure 3-1-1 further breaks down these guns and gun systems by model and application.

3.1.3.1 A/A49E-10 25mm Gun System. The A/A49E-10 25mm Gun System utilized on the AV-8B aircraft houses a GAU-12/U 25mm gun which is a pneumatically driven, 5 barreled, rotary action, air cooled and percussion primed weapon with a rate of fire of 3,600 rounds per minute. The A/A49E-10 25mm Aircraft Gun System is composed of two subsystems; the GAK-14/A49E-10 Gun Subsystem (gun pak) and the GFK-11/49E-10 Ammunition Handling Subsystem (ammo pak). The paks are linked together by a crossover chute assembly that houses interfacing components and a splined crossover shaft which provides transfer of mechanical drive power from the gun pak to the ammo pak. The gun system has a capacity of 300 rounds of linkless 25mm percussion primed ammunition.

Gun or Gun System	AH-1	AV-8B	F/A-18A-D	F/A-18E-F	H-46	H-53	H-60	V-22	UH-1
A/A49E-10 GAU-12/U 25mm		X							
XM-218 .50 Cal					X	X			
GAU-16/A .50 Cal							X	X	X
GAU-21 .50 Cal						X	X		X
GAU-17/A 7.62mm							X	X	X
M60D 7.62mm							X		
M240D 7.62mm					X	X	X	X	X
A/A49-A1 M61A1/A2 20mm			X						
A/A49-A2 M61A2 20mm				X					
M197 20mm	X								

Figure 3-1-1. Aircraft Gun System Application

3.1.3.2 XM-218 .50 Cal Machine Gun. The XM-218 utilized on the H-46 and H-53 series aircraft is a crew served, recoil operated, belt fed, air cooled, and percussion fired weapon, with a rate of fire of 750 rounds per minute. The gun system consists of the XM-218 .50 Cal machine gun, a pintle mount assembly, brass collection bag, and ammunition can bracket assembly. The pintle mount assembly is attached at personnel or cargo doors or windows of the aircraft. The ammunition can bracket holds a single 100 round can of linked .50 Cal percussion primed ammunition. Additional cans of ammunition are carried inside the aircraft to allow for rapid reloading.

3.1.3.3 GAU-16/A .50 Cal Machine Gun. The GAU-16/A utilized with the Defensive Armament Subsystem (DAS) on the UH-1, MV-22 and H-60 aircraft. The differences between the GAU-16/A and the XM-218 are in a reconfigured trigger mechanism and front sight assembly on the GAU-16/A. The GAU-16/A is attached to the DAS system using a shock absorbing "soft mount assembly that removes up to 75 percent of the recoil forces generated during firing.

3.1.3.4 GAU-17/A 7.62mm Machine Gun. The GAU-17/A utilized on the UH-1, V-22 and H-60 aircraft is a crew served, electrically driven, 6 barreled, rotary action, percussion fired weapon, with a maximum rate of fire of 4,000 rounds per minute. In the UH-1 DAS configuration the gun can be fixed forward and remotely fired by the pilot. The components that make up the GAU-17/A gun system consist of a gun control assembly with electrical cables, gun drive motor, a MAU-201/A or a DAFD 2000-1 delinking feeder, flexible ammunition feed chutes and an ammunition storage system.

3.1.3.5 M240D 7.62mm machine gun. The M240D is utilized on the UH-1, CH-46, H-60R/S and MV-22 aircraft. The M240D 7.62mm machine gun is a left hand feed, gas operated, air cooled, fixed head space weapon. The M240D has two possible configurations: aircraft and egress (ground). In the aircraft configuration the M240D has a front and rear sight. The trigger group which accommodates the spade grip device. The ground configuration involves the installation of an egress package which is designed to provide downed aircrew personnel with increased fire power. The Egress Package contains a buttstock assembly, a buffer assembly, a bipod assembly, and a conventional trigger assembly. The M240D is issued for aircraft configuration. The barrel assembly contains a three position gas plug. The first gas plug position allows the weapon to cycle at 750-Shots Per Minute (SPM). The two remaining ports increase the SPM by 100 each (i.e., gas port position 2 = 850 SPM; gas port position 3 = 950 SPM). The aircraft configured M240D weighs 25.6 lbs. and is 42.3 inches long. The egress configuration weighs 26.2 lbs. and is 49.0 inches long.

3.1.3.6 M60D 7.62mm Machine Gun. The M60D machine gun utilized aboard the H-60 aircraft. The M60D gun system consists of the gun, a pintle mount (M-21, M-23, or DAS), and one of two basic ammunition storage systems. The first storage system consists of an ammunition can bracket that mounts to the gun or the mount, the bracket holds a single 200 round ammunition can. The second ammunition storage system is made up of a 500 round ammunition can and a flexible feed chute attached to the base of the mount.

3.1.3.7 A/A49-A1 and A/A49-A2 20mm Automatic Gun Systems. The A/A49-A1 is a 20mm double ended linkless gun system that is a palletized assembly that includes the M61A1 or M61A2 automatic gun and a linkless ammunition handling system. The A/A49-A1 Gun System is utilized in the F/A-18A through D aircraft, is a hydraulically driven, 6 barreled, rotary action, air cooled and electrically primed weapon, with selectable rates of fire of either 4,000 or 6,000

rounds per minute and has a capacity of 578 rounds of 20mm linkless M-50 or PGU series electrically primed ammunition. The A/A49-A2 is a 20mm double ended linkless gun system that is a palletized assembly that includes the M61A2 automatic gun and a light weight linkless ammunition handling system. The A/A49-A2 Gun System is utilized in the F/A-18E and F aircraft, is a hydraulically driven, 6 barreled, rotary action, air cooled and electrically primed weapon, with selectable rates of fire of either 4,000 or 6,000 rounds per minute and has a capacity of 412 rounds of 20mm linkless M-50 or PGU series electrically primed ammunition.

3.1.3.8 M197 20mm Automatic Gun. The M197 gun utilized by the AH-1 aircraft is an electrically driven, 3 barreled, rotary action, air cooled, electrically fired weapon with a rate of fire of 300-1,500 rounds per minute. The M197 is utilized in the AH-1 aircraft and mated to an ammunition storage and handling system that has a capacity of 700 rounds of linked M-50 or PGU series electrically primed ammunition. The M197 utilizes the M89E1 declutching feeder to delink and feed ammunition into the gun. The M197 is attached to the A/A49E-7 turret assembly that provides the sighting, positioning (210 degrees azimuth and 60 degrees elevation), and firing the gun.

3.1.3.9 GAU-21 .50 Cal machine gun. The GAU-21 weapon system is utilized on the H-53, UH-1Y and H-60 series aircraft and is a crew served, recoil operated, belt fed, air cooled and percussion fired weapon. The GAU-21 weapon system includes: pintle mounted .50 Cal machine gun with an open bolt design, a rate of fire greater than 1,000 rounds per minute, the capability to use 100, 300, or 600 round ammunition cans to fire all standard NATO .50 Cal ammunition to maintain or increase the available field of fire for each airframe, and dismounted operation by one person within two minutes.

3.1.4 Maintenance Philosophy. The maintenance philosophy for Aircraft Gun Systems (AGS), and associated equipment is generally based on the three level (Organizational, Intermediate, and Depot) concept that is standard through Naval aviation maintenance while Airborne Crew Served Weapons (ACSWs), Laser Aiming Devices (LADs) and associated equipment is generally based on a two level (Organizational to Depot/Original Equipment Manufacturer (OEM)) concept. Both philosophies require that inspections and maintenance tasks be performed at the lowest level capable of performing the required task. Within this philosophy and concept, maintenance tasks fall into the categories, scheduled and unscheduled. Scheduled maintenance includes those tasks that are performed when the system or component meets predetermined conditions, such as time, cycles, or certain environmental conditions, and as such scheduled maintenance is primarily preventative in nature. Detailed scheduled maintenance requirements are set forth in applicable technical manuals or publications for the specific items. Unscheduled maintenance includes those tasks that are performed in order to repair or correct a malfunction that occurs during operation. Unscheduled maintenance tasks are performed in strict compliance with procedures as set forth in applicable technical manuals and publications for specific items. When an inspection or task is beyond the capabilities of a maintenance level, the gun, gun system, or component will be sent to the next higher level maintenance activity as prescribed by the maintenance philosophy for that item (i.e., two level or three level). Under normal circumstances when an AGS or component requires induction into the higher level, a replacement is requisitioned via normal supply procedures and the discrepant item is inducted for repair to the next higher level of maintenance. In the case of ACSW and LADs, the custodian will make arrangements for repair/replacement via the supply system or the next higher level activity

providing support. Maintenance actions at all levels are performed in accordance with approved technical manuals and publications. These manuals and publications include; Maintenance Instruction Manuals (MIMs), Illustrated Parts Breakdown (IPBs), Maintenance Requirement Cards (MRCs), and Technical Directives (TDs) that apply to the specific item (i.e., AAC, AAB). A listing of applicable and approved technical manuals and publications can be downloaded via the Naval Air Technical Data and Engineering Service Center (NATEC) website at https://mynatec.navair.navy.mil/.

3.1.5 Physical Security. OPNAVINST 5530.13 series sets forth minimum protection measures, applicable policies, standards, criteria, and procedures governing the physical security of Arms Ammunition and Explosives (AA&E). Generally, arms include portable, individually operated weapons that can be fired without special mounts or firing devices, and are vulnerable to theft. ACSWs are by definition assigned a security risk category of II. AGS/medium caliber (20-30mm aircraft mounted cannons) do not fit within an established security risk category and are classified as Low Risk AA&E. Low Risk AA&E is addressed in the OPNAVINST 5530.13 series.

3.1.6 Aeronautical Equipment Service Record (AESR) (OPNAV 4790/29) and Equipment Logbooks.

3.1.6.1 The AESR is a loose-leaf record. Special care must be taken to ensure the separate forms are not lost when the record is removed from the aircraft logbook. A two prong fastener will be used to bind the record together DO NOT USE STAPLES. See Figure 3-1-2 for AESR/Equipment Logbook Forms Matrix and Figure 3-1-3 for construction sequence for aircraft guns and/or related equipment requiring OPNAV 4790 Forms. DO NOT USE STAPLES.

3.1.6.1.1 The AESR is maintained similarly to the aircraft logbook. Since it contains loose-leaf forms, the full identification data and serial number are inserted on both sides of each page in the spaces provided to ensure ready identification when pages are removed or new continuing pages are initiated. The AESR accompanies the equipment at all times. When equipment is installed as part of the aircraft, this record is maintained concurrently with and becomes part of the aircraft logbook.

3.1.6.1.2 Details. Details on pages that are used in both the AESR and logbook are covered under the page descriptions in this chapter.

3.1.6.1.3 Additional Data. Pages or forms, other than those described in this manual (unless specifically directed by COMNAVAIRSYSCOM), are not inserted, stapled, or otherwise attached to the AESR. Additional data, for which there is not a designated place in the AESR shall be maintained in the manila envelope in the back of the AESR. Superseded forms will be closed out with the statement “NO FURTHER ENTRIES THIS PAGE” and a new form initiated. The superseded form will remain in the AESR, in its proper section, until purged.

3.1.6.1.4 The requirement for AESRs is determined by T/M/S aircraft Periodic Maintenance Information Card (PMIC) decks and COMNAVAIRSYSCOM, including the list of forms required. Newly established AESR requirements shall be published by COMNAVAIRSYSCOM and shall include a listing of forms required as part of the AESR.

OPNAV 4790/FORMS												
System	**P/N**	**22A**	**23A**	**24A**	**25A**	**27A**	**28A**	**29**	**31A**	**113**	**136A**	**Penalty**
.50 Cal Gun GAU-16/A	1698AS190						X		X			4C
7.62mm Gun GAU-17/A	3392AS400 218F833						X		X			4C
Delinking Feeder MAU-201/A	218F830						X		X			N/A
Feeder Delinking Assy.	DAFD 2000-1						X		X			N/A
.50 Cal Gun GAU-21	3528901070						X		X			4C
7.62mm Gun M60D	11699750 7792080						X		X			4C
7.62mm M240D	12977099						X		X			4C
.50 Cal Gun XM-218	11691500						X		X			4C
25mm Gun Subsystem GAK-14	1395AS101	X	X	X	X	X		X	X			4C
GAU-12 25mm Gun Subassembly	1395AS382 1395AS1102						X		X			4C
Pressure Reg. Shutoff Valve	1395AS164-3						X					N/A
25mm Gun PAK Structure Assy.	75A732707-1005 75A732707-1007 75A732707-1009						X					N/A
Pneumatic Drive Unit	1395AS1016-2						X					N/A

NOTES:

1. For all items with an * designation, associated dash numbers are applicable.
2. All OPNAV forms without available space for further entries must be attached to a newly created OPNAV form. Accurate maintenance history of the item monitored must be readily available.
3. Entries on all OPNAV forms should be typed or written legibly in ink.
4. Actual rounds counts shall be used for SRC, EOR and EHR card entries.
   a. Enter all known applicable data on the appropriate OPNAV form.
   b. Title the blank column on OPNAV 4790/31A (1/84) rounds fired and used for tally.
   c. GITR total rounds recorded plus 10 percent of gun life. If total rounds count is unknown the gun will be Beyond Capability of Maintenance (BCM).
   d. GITR total rounds recorded plus 10 percent of gun life. If total rounds count is unknown, perform 15K rounds inspection, penalize 10% of 15K and adjust total rounds count to 16,500 and return to service.
   e. At no time will subject equipment be zeroed when sustaining information is not available. Exception: The rounds fired penalty does not apply to zeroed equipment reworked by Depots.
5. Update the appropriate OPNAV forms prior to transfer of equipment. Current accurate records are essential.

Figure 3-1-2. AESR/Equipment Logbook Forms Matrix

OPNAV 4790/FORMS												
System	**P/N**	**22A**	**23A**	**24A**	**25A**	**27A**	**28A**	**29**	**31A**	**113**	**136A**	**Penalty**
Ammunition Crossover Chutes	1395AS399						X					4F
25mm Improved Blast Deflector	75A732801-1007									X		N/A
25mm AHS GFK 11	1395AS102	X	X	X	X	X		X	X		X	N/A
AHS PAK Structure Assy.	75A732707*						X					N/A
Electronic Control Unit	1395AS1066									X		N/A
M197 20mm Gun	11838579						X		X			4D
Declutch Feeder M89E1	12007300						X		X			4D
A/A49 A-1 20mm Gun System	211F930 223F301	X	X	X	X	X		X	X		X	N/A
A/A49 A-2 20mm Gun System	10052600 10052687	X	X	X	X	X		X	X		X	N/A
20mm M61A1 Gun	7791641 12011590 8227553-10 1213464 1213464-1						X		X			4D
20mm M61A2 Gun	12913464 12913464-1 8227553-30						X		X			4D

NOTES:

1. For all items with an * designation, associated dash numbers are applicable.
2. All OPNAV forms without available space for further entries must be attached to a newly created OPNAV form. Accurate maintenance history of the item monitored must be readily available.
3. Entries on all OPNAV forms should be typed or written legibly in ink.
4. Actual rounds counts shall be used for SRC, EOR and EHR card entries.
   a. Enter all known applicable data on the appropriate OPNAV form.
   b. Title the blank column on OPNAV 4790/31A (1/84) rounds fired and used for tally.
   c. GITR total rounds recorded plus 10 percent of gun life. If total rounds count is unknown the gun will be BCM.
   d. GITR total rounds recorded plus 10 percent of gun life. If total rounds count is unknown, perform 15K rounds inspection, penalize 10% of 15K and adjust total rounds count to 16,500 and return to service.
   e. At no time will subject equipment be zeroed when sustaining information is not available. Exception: The rounds fired penalty does not apply to zeroed equipment reworked by Depots.
   f. The Baseline is GITR total rounds count on the Ammunition Handling Subsystem the chute is attached to. When chute is not associated to an Ammunition Handling Subsystem and rounds count is unknown, the baseline shall be 6,000 rounds.
5. Update the appropriate OPNAV forms prior to transfer of equipment. Current accurate records are essential.

Figure 3-1-2. AESR/Equipment Logbook Forms Matrix - contd.

OPNAV 4790/FORMS												
System	**P/N**	**22A**	**23A**	**24A**	**25A**	**27A**	**28A**	**29**	**31A**	**113**	**136A**	**Penalty**
Feeder, Auto Gun	209F334									X		N/A
Hydraulic Drive Unit (F/A-18)	211F359-2 209F328 MC13862-3 CMF3-100-1A									X		N/A
Exit Unit Assy.	209F537 10052595									X		N/A
Transfer Unit Assy.	217F491 10052602									X		N/A
Entrance Unit Assy.	209F487 10052594									X		N/A
Ammo Drum	209F486 219F296 10052595									X		N/A
Unload/Drive Unit	209F335 10052603									X		N/A
Transfer Unit Assy.	175F632									X		N/A
Aircraft Adapter Assy.	189F292						X					7500 RDS
Aircraft Adapter Assy.	218F516						X					7500 RDS

NOTES:

1. For all items with an * designation, associated dash numbers are applicable.
2. All OPNAV forms without available space for further entries must be attached to a newly created OPNAV form. Accurate maintenance history of the item monitored must be readily available.
3. Entries on all OPNAV forms should be typed or written legibly in ink.
4. Actual rounds counts shall be used for SRC, EOR and EHR card entries.
   a. Enter all known applicable data on the appropriate OPNAV form.
   b. Title the blank column on OPNAV 4790/31A (1/84) rounds fired and used for tally.
   c. GITR total rounds recorded plus 10 percent of gun life. If total rounds count is unknown the gun will be BCM.
   d. GITR total rounds recorded plus 10 percent of gun life. If total rounds count is unknown, perform 15K rounds inspection, penalize 10% of 15K and adjust total rounds count to 16,500 and return to service.
   e. At no time will subject equipment be zeroed when sustaining information is not available. Exception: The rounds fired penalty does not apply to zeroed equipment reworked by Depots.
5. Update the appropriate OPNAV forms prior to transfer of equipment. Current accurate records are essential.

Figure 3-1-2. AESR/Equipment Logbook Forms Matrix - contd.

Aeronautical Equipment Service Record (OPNAV 4790/29)
Equipment Operating Record (Separator) (OPNAV 4790/31)
Equipment Operating Record (OPNAV 4790/31A)
Inspection Record (Separator) (OPNAV 4790/22)
Inspection Record (OPNAV 4790/22A)
Repair/Rework Record (Separator) (OPNAV 4790/23)
Repair/Rework Record (OPNAV 4790/23A)
Technical Directives (Separator) (OPNAV 4790/24)
Technical Directives (OPNAV 4790/24A)
Miscellaneous/History (Separator) (OPNAV 4790/25)
Miscellaneous/History (OPNAV 4790/25A)
Preservation/Depreservation Record (Separator) (OPNAV 4790/136)
Preservation/Depreservation Record (OPNAV 4790/136A)
Inventory Record (Separator) (OPNAV 4790/27)
Inventory Record (OPNAV 4790/27A)
Equipment History Record (EHR) Card (OPNAV 4790/113)
Scheduled Removal Component Card (OPNAV 4790/28A)

Figure 3-1-3. AESR Construction Sequence

3.1.6.2 Equipment Logbooks are simplified versions of the AESR and are not to be confused with aircraft logbooks. The Equipment Logbook is a standard file folder based, loose leaf record, special care must be taken to ensure the separate forms are not lost when handling the record. Two prong fasteners will be used to bind the required forms in the logbook. DO NOT USE STAPLES. See Figure 3-1-2 for AESR/Equipment Logbook Forms Matrix and Figure 3-1-4 for construction sequence for aircraft guns and/or related equipment requiring OPNAV 4790 Forms. DO NOT USE STAPLES.

3.1.6.2.1 The Equipment Logbook is maintained similarly to the AESR. Since it contains loose-leaf forms, the full identification data and serial number are inserted on both sides of each page in the spaces provided to ensure ready identification when pages are removed or new continuing pages are initiated. The Equipment Logbook accompanies the equipment at all times. Equipment that is constantly removed and installed for the purpose of aircraft mission configuration may be maintained within the respective division having physical custody of the equipment.

3.1.6.2.2 Additional Data. Pages or forms, other than those described in this manual (unless specifically directed by COMNAVAIRSYSCOM), are not inserted, stapled, or otherwise attached to the logbook. Additional data, for which there is not a designated place in the logbook shall be maintained in the manila envelope in the back of the logbook. Superseded forms will be closed out with the statement "NO FURTHER ENTRIES THIS PAGE" and a new form initiated. The superseded form will remain in the logbook, in its proper location until purged.

3.1.6.2.3 The requirement for Equipment Logbooks is determined by COMNAVAIRSYSCOM, including the list of forms required. Newly established Equipment Logbook requirements shall be published by COMNAVAIRSYSCOM and shall include a listing of forms required as part of the Equipment Logbook.

3.1.6.3 AESR and Equipment Logbook forms and records. The various forms, cards and records utilized to construct the AESR and Equipment Logbook provide managers with the status, maintenance, operational history and general information for the equipment. This data includes transfer, receipt, operation, installation, removal and rounds fired accounting data etc. The cards/sheets reflect all maintenance actions, modifications or configurations that have been performed for that item at each maintenance level. Additionally, the cards/sheets as a comprehensive record aid in determining scheduled maintenance requirements and intervals. Scheduled Removal Component (SRC), Equipment History Record (EHR) cards, and Equipment Operating Record (EOR) sheets are maintained as part of the required AESR or Equipment Logbook at maintenance level that has physical custody of the item.

3.1.6.3.1 Inspection Record (OPNAV 4790/22A).

3.1.6.3.1.1 This form provides a record of all scheduled and conditional inspections performed on the equipment during each period (i.e., 28-day, rounds based inspections, etc.). Accurate inspection records prevent instances of wasted effort due to the failure of logbook custodians to make proper entries. Questionable or incomplete records leave receiving activities no alternative but to assume previous noncompliance and reinspect per existing directives or refuse acceptance of the equipment until corrective action has been taken. Routine servicing and daily inspections are not logged (i.e., pre-fire and post fire).

Standard File Folder
Folder Left Side
Equipment History Record (EHR) Card (OPNAV 4790/113)
Scheduled Removal Component Card (OPNAV 4790/28A)
Folder Right Side
Equipment Operating Record (Separator) (OPNAV 4790/31)
Equipment Operating Record (OPNAV 4790/31A)
Inspection Record (Separator) (OPNAV 4790/22)
Inspection Record (OPNAV 4790/22A)

Figure 3-1-4. Equipment Logbook Construction Sequence

3.1.6.3.2 Repair/Rework Record (OPNAV 4790/23A).

3.1.6.3.2.1 This form, used in AESR, contains a complete record of all repair, reconditioning, standard rework, conversion, modification, modernization inspections performed on the equipment at a repair activity or by any I-level or D-level activity.

3.1.6.3.3 Technical Directives (OPNAV 4790/24A).

3.1.6.3.3.1 This form, used in the AESR, contains a record of TDs affecting the equipment and its integral parts. Separate pages are required to record each type of TD on equipment and its integral parts. To provide uniformity throughout the system for all equipment, all applicable changes and bulletins, including revisions, are recorded in this section of the AESR with the NAVAIR 00-500C and All Weapons Information System (AWIS) Technical Directive System (TDS) as the baseline. Prior TDs not listed in the NAVAIR 00-500C are no longer applicable to the T/M/S, or they are part of the current configuration.

3.1.6.3.4 Miscellaneous/History (OPNAV 4790/25A).

3.1.6.3.4.1 This form is used in the AESR. It is used to record pertinent information affecting the equipment for which no other place has been provided within the AESR, for example, special test data, abnormal characteristics, significant damage/repair, high speed gun jams, broken cocking pins authorization for extension of operating intervals, verification of equipment operating hours on acceptance and transfer, and exposure to large quantities of salt water, fire extinguishing agents, or other corrosive elements, Conventional Ordnance Deficiency Report (CODR)/Explosive Event Report (EER)/Explosive Mishap Report (EMR)/Date-Time-Groups (DTGs), etc.

3.1.6.3.5 Inventory Record (OPNAV 4790/27A).

3.1.6.3.5.1 This form is used in the AESR. It is used to maintain a current inventory of all equipment, components, and assemblies requiring a Module Service Record (MSR), Assembly Service Record (ASR), Equipment History Record (EHR), or Scheduled Removal Component (SRC) card. It is impractical to include a standard list of components since requirements vary according to T/M/S equipment.

3.1.6.3.6 Scheduled Removal Component Card (OPNAV 4790/28A).

3.1.6.3.6.1 The SRC card is a two page form used to record maintenance history, installation, and usage data. It is maintained as part of the logbook/AESR. When a component is removed from the assembly or equipment, the SRC card accompanies the component. Continuity of this maintenance history is paramount. NAVAIRINST 4790.3 establishes policy and assigns responsibilities for the planned removal/replacement of selected aeronautical components designated as SRC items.

3.1.6.3.7 Equipment Operating Record (OPNAV 4790/31A).

3.1.6.3.7.1 This record is used in the AESR and Equipment Logbooks. This form is intended for use with all aeronautical equipment requiring the daily and monthly compilation of significant operating data (i.e., ACSW daily rounds fired, LAD daily operating cycles and AGS rounds fired). Reporting custodians will ensure that operating and monitoring system data is entered on this form daily for ACSW and LAD, not greater than monthly for AGS and upon transfer of the equipment.

NOTE

I-level and D-level repair facilities are authorized to make a one-line block entry in lieu of separate end of the month closeout entries. These block entries facilitate recording of non-operating hours for equipment, including uninstalled aircraft engines, while in storage, off-site standard rework, or repair cycles. For example, 940601-950131 could be entered in block 4 of the Equipment Operating Record (EOR) (OPNAV 4790/31A), 0.0 in block 5 and corresponding data in blocks 5b and 6 through 8 on the same line (as appropriate).

3.1.6.3.7.2 Purging. This record remains a permanent part of the AESR/Equipment Logbook.

3.1.6.3.8 Equipment History Record Card (OPNAV 4790/113).

3.1.6.3.8.1 This record is a two page form that provides a method of monitoring specific maintenance data on designated aeronautical components and equipment that do not qualify for an SRC card. This record provides the means of recording maintenance history on designated items. An individual EHR card is maintained for each serialized item as part of the AESR/Equipment Logbook while the component is installed/configured. When the component is removed from the aircraft or equipment, the EHR card will be attached to and accompany the component to its final destination.

3.1.6.3.9 Preservation/Depreservation Record (OPNAV 4790/136A).

3.1.6.3.9.1 This form is used in the AESR. An entry is required any time preservation, re-preservation, or depreservation is performed on that equipment.

3.1.7 Gun System Allowances and Disposition.

3.1.7.1 Allowances. Weapons System Planning Documents (WSPD) for each weapons system is produced by COMNAVAIRSYSCOM and published to provide direction and guidance necessary for the development, procurement and operational/logistical support of the weapons system. Relevant WSPDs should be used to calculate allowances. WSPDs contain the approved Chief of Naval Operations, COMNAVAIRSYSCOM, and Commandant of the Marine Corps official gun allocations for a given aircraft. Request for change to allocation is as specified in each WSPD. Since the WSPDs are the basic planning documents for budgeting and procurement of additional aircraft guns and replenishment and spare guns, WSPDs are maintained for the following AGS: A/A49E-10 25mm Gun System and M197 20mm/M89 Feeder

3.1.7.2 Disposition. Type Commander (TYCOM) shall be consulted in all cases where inventory/allocation adjustments are involved so as to maximize usage and minimize wasteful condition code changes/rework of usable assets.

3.1.7.3 These definitions and procedures apply to the removal and disposition of guns 20mm and larger and associated equipment from aircraft destined for storage or strike.

3.1.7.4 Storage (stored) aircraft are removed from the active inventory and set aside as a contingency reserve.

3.1.7.5 Stricken (strike) aircraft are stricken from the list of Navy aircraft as Category 1, Damage; Category 2, Depreciation; Category 3, Administration; or Category 4, Completed Service Life.

3.1.7.6 Associated equipment is any equipment or material that constitutes an operating gun system or aircraft ammunition handling system.

3.1.7.7 Guns and all associated equipment are to be removed from aircraft designated for storage or strike and turned into the supply system as a Condition Code F asset. Annotate in the AESR the pertinent information for the equipment removed (i.e., Aircraft Transfer Order (ATO)/Strike DTG, reason, etc.).

3.1.8 Small Arms Allowances and Disposition.

3.1.8.1 Allowances. WSPD for each weapons system is produced by COMNAVAIRSYSCOM and published to provide direction and guidance necessary for the development, procurement and operational/logistical support of the weapons system. Relevant WSPDs should be used to calculate allowances. WSPDs contain the approved Chief of Naval Operations, COMNAVAIR-SYSCOM, and Commandant of the Marine Corps official gun allocations for a given aircraft. Request for change to allocation is as specified in each WSPD. Since the WSPDs are the basic planning documents for budgeting and procurement of additional aircraft guns and replenishment and spare guns, WSPDs are maintained for the following ACSW:

XM-218	.50 Cal
GAU-16/A	.50 Cal
GAU-21	.50 Cal
GAU-17/A	7.62mm
M60D	7.62mm
M240D	7.62mm

3.1.8.2 NAVSEAINST 8370.2A shall apply for establishing initial allowance, changing authorized unit activity allowance and for disposition of small arms and associated equipment.

3.1.8.3 Aircraft Controlling Custodian (ACC)/TYCOM shall be consulted in all cases where inventory/allocation adjustments involve excess weapons in order to maximize usage and minimize needless condition code F assignments which could result in unnecessary rework of usable assets.

3.1.9 Maintenance Planning.

3.1.9.1 Maintenance planning data is required for budgeting and depot work loading for repair and overhaul of gun systems. Total inventory assets, Beyond Capability of Maintenance (BCM), Non-Ready For Issue (NRFI) assets and projected Depot high times are a essential maintenance factor. These factors are used to ensure adequate budget requirements for depot rework, repair and overhaul of aircraft guns.

3.1.10 Guns Inventory Tracking and Reporting (GITR) System. The GITR database located on the AWIS website at https://awis.navair.navy.mil is an automated system that provides for the analysis, tracking, inventory, and report generation for aviation guns, gun systems, and associated components. Data extracted from GITR will be used to plan depot maintenance actions, as well as maintain adequate quantities of serviceable assets on hand for Fleet activities. All activities involved with aviation guns, gun systems, and associated components will input the following: issues, transfers, receipts, Ready For Issue (RFI) status, rounds fired, combat/non-combat losses, and configuration status changes into GITR within 24 hours, as operational tempo allows, not exceeding 72 hours. Database integrity must be maintained by validating

GITR inventory entries against on-hand physical inventory. The following guns, gun systems, and associated components will be reported in GITR:

GAU-12/U	25mm
GAK-14/A49E-10	25mm Gun Subsystems
GFK-11/A49E-10	Ammunition Handling System
M61A1	20mm
M61A2	20mm
A/A49-A-1	20mm Double Ended Linkless Gun
M197	20mm
M89E1	Declutching Feeder
GAU-16/A	.50 Cal
GAU-21	.50 Cal
XM-218	.50 Cal
GAU-17/A	7.62mm
M60D	7.62mm
M240D	7.62mm
ACSW LAD	
AGS LAD	
Handheld LAD	

3.1.11 Laser Aiming Devices (LADs). This section addresses maintenance program management of LADs. Maintenance management of LADs is critical to the program sustainment and asset serviceability, which directly impacts operational readiness and mission capability. LADs are assigned a two digit Navy stock number prefix that identifies the technical and inventory management responsibilities. LADs are assigned a 6B cognizance code and are under the technical cognizance of the COMNAVAIRSYSCOM.Inventory management responsibilities are assigned to NAVSUP WSS, Mechanicsburg, PA. Commander Naval Air Forces (CNAF) Armament Systems Office Code N4 is the Fleet level management activity responsible for facets of Fleet support including, but not limited to, logistical support, prime custodian entitlements and outfitting and liaising with the NAVAIR program office, as applicable.

3.1.11.1 Responsibilities.

a. COMNAVAIRSYSCOM is responsible for the program management, integrated logistics support, and maintenance and engineering functions pertinent to the Program of Record LADs under their cognizance. NAVSURFWARCENDIV, Crane, IN, is the cognizant field activity designated by COMNAVAIRSYSCOM to administer and perform quality engineering functions for LADs.

b. APMLs plan and implement integrated logistics support and project support for management activities for major weapons systems. APMLs are directly responsible to weapons systems PMs for the total life cycle logistics requirements for the life of the system until disposed of. APMLs are also responsible to the Product Support Manager for the effective planning and development of operationally effective and cost effective acquisition programs.

3.1.11.2 Applicability. This section applies to the laser aiming devices described below. Figure 3-1-5 further breaks down these lasers by aircraft applicability.

a. IZLID 200P laser aiming device. The IZLID 200P is the common Crew Served Weapon (CSW) mounted laser authorized for all Type Model Series (T/M/S) aircraft which employ CSW, but is only currently funded by USMC Platform PMAs. While IZLID 200P lasers are authorized for use on H-60 aircraft, the current funded and sustained laser employed by the H-60 community is the PEQ-3. The H-60 Platform PMA maintains cognizant responsibility for the PEQ-3 logistical requirements.

b. IZLID 1000P-W. The IZLID 1000P-W is utilized on the H-1 mounted M-197 gun.

c. IZLID 1000. The IZLID 1000 is the hand held variant LAD employed by aircrew and is not affixed to any weapon.

3.1.11.3 Maintenance Philosophy. The maintenance philosophy for LADs is based on minimal Organizational maintenance capabilities and Depot repair. The USMC Intermediate level activities and the Navy Type Wings are the assigned and responsible prime custodians, while the Organizational activities perform the required maintenance within their scope. The maintenance philosophy for LADs is on an unscheduled basis and is conditional dependent on discrepant lasers. There are no formal MRCs or scheduled maintenance requirements associated with LADs. Detailed maintenance instructions are outlined in the applicable technical manuals or publications. When a maintenance task is beyond the capability of the organizational activity, the laser shall be returned to the cognizant field activity (Crane, IN) for disposition and a replacement laser shall be requisitioned if required.

3.1.11.4 Laser Allowance/Disposition. Currently, Fleet laser allowances are determined by COMNAVAIRFOR Armament Systems Office N4. CNAF will determine prime custodian activity entitlements based off laser inventory paucity and operational commitments as required. WSPDs are being developed to completely outfit the Navy and Marine Corps full requirement per T/M/S, which will sufficiently provide full capability to all Fleet activities once approved. When required, LAD disposition will be provided to Fleet activities by CNAF via the AWIS Tech Dialogue method or by CODR responses by the COMNAVAIRSYSCOM CFA, located in Crane, IN.

3.1.11.5 Laser Aiming Device Tracking and Reporting. The GITR system is the database located on the website at https://awis.navair.navy.mil, which is an automated website that provides for the analysis, tracking, inventory, and report generation for all guns and lasers. All LADs shall be tracked via the GITR database once issued from the GITR supply point to the prime custodian. Data extracted from GITR will be used by CNAF and COMNAVAIRSYSCOM to determine accurate inventory levels when considering program management operation and maintenance funding requirements as well as Fleet cross leveling of assets if required. Database integrity must be strictly maintained and accurately reflect on hand physical inventories in real time in order to facilitate the program management responsibilities and Fleet operational capabilities.

GUN OR GUN SYSTEM	AH-1	H-46	H-53	H-60	UH-1
XM-218 Cal. 50		IZLID 200P	IZLID 200P		
GAU-16/A Cal. 50				IZLID 200P	IZLID 200P
GAU-21 Cal. 50			IZLID 200P	IZLID 200P	
GAU-17/A 7.62mm				IZLID 200P	IZLID 200P
M-60D 7.62mm				IZLID 200P	
M240D 7.62mm		IZLID 200P	IZLID 200P	IZLID 200P	IZLID200P
M197 20mm	IZLID 1000P-W				

Figure 3-1-5. Laser Application

CHAPTER 3.2

Organizational Level Maintenance

Table of Contents

Paragraph	Subject	Page
3.2.1	General	3-2-1
3.2.2	Organizational Level (O-level) Maintenance Responsibilities	3-2-1

List of Illustrations

Figure	Title	Page
3-2-1	Organizational Level Maintenance Responsibilities for Guns and Gun Systems	3-2-2

CHAPTER 3.2

Organizational Level Maintenance

3.2.1 General. This chapter discusses the maintenance actions assigned to Organizational level (O–level) maintenance activities which are performed in support of the day-to-day operation of the unit. O-level maintenance is performed by Aviation Ordnance technicians assigned to Organizational maintenance activities. In the case of crew-served guns the individual qualified Aircrew/Gunner may perform the tasks listed in Paragraph 3.2.2.1 through 3.2.2.7. Aviation Ordnance technicians will assist and supervise the actions of the individual Aircrew/Gunner. Volume I, Chapter 2.3 of this manual, describes the objectives and structure of these activities. O-level maintenance directly supports and maintains the aircraft weapon system, which consists of the aircraft, the gun or gun system, and the associated interface items.

3.2.2 Organizational Level (O-level) Maintenance Responsibilities. O-level maintenance actions are tailored within the constraints of the O-level's manpower and maintenance capabilities to ensure that the aircraft gun or gun system will perform its assigned mission. Figure 3-2-1 assigns the O-level maintenance actions that are performed on the aircraft guns or gun systems listed in Chapter 3.1 of this volume. All maintenance actions are to be performed in accordance with the approved Maintenance Instruction Manuals (MIMs), loading manuals, and checklists which have been developed for each unique application of the aircraft gun or gun system.

3.2.2.1 Deficiency Reports. Deficiency reports are initiated at O-level when a deficiency is discovered during the performance of any of the assigned O-level maintenance actions. Deficiency reporting procedures are contained in Volume I, Chapter 4.6.

3.2.2.2 Unscheduled Maintenance. Unscheduled maintenance consists of actions performed as a result of a failure, firing stoppage, misfire, or other malfunction of the gun or gun system. Unscheduled maintenance actions are performed to return the gun or gun system to an operational condition. Unscheduled maintenance actions include replacement of worn or broken parts, electrical repairs, and other repairs to the gun or gun system. O-level maintenance personnel perform unscheduled maintenance to the depth permitted by the applicable authorized MIM.

3.2.2.3 Scheduled Maintenance. Scheduled maintenance is performed by qualified technicians utilizing approved applicable MIMs and Maintenance Requirement Cards (MRCs). MRCs are provided to facilitate a phased maintenance program for the gun or gun system in consonance with other scheduled aircraft maintenance requirements. Scheduled maintenance consists of servicing, preflight checks, in-flight checks, and postflight checks as well as calendar or other designated interval checks. Scheduled maintenance actions include inspection, servicing, lubrication, adjustment, and replacement of parts and components or minor assemblies as specified in the applicable authorized aircraft MIM.

3.2.2.4 Gun or Gun System Records. Each gun or gun system has an accompanying document that serves as a complete history of the gun or system. See Paragraph 3.1.6. The documents are used to record all maintenance actions performed on the gun or gun system at each

Gun or Gun System	Aircraft Preparation/ Inspection	Gun/Gun System Preparation/ Inspection	Gun Loading/ Download-ing	Post-loading Quality Assurance	Arming/ Dearming	Gun Jam Clearing
M60D 7.62mm	X[1]	X[1]	X[1]	X		X[1,2]
M240D 7.62mm	X[1]	X[1]	X[1]	X		X[1,2]
GAU-17/A 7.62mm	X[1]	X[1]	X[1]	X		X[1,2]
XM-218 GAU-15/A GAU-16/A .50 Cal	X[1]	X[1]	X[1]	X		X[1,2]
GAU-21 .50 Cal	X[1]	X[1]	X[1]	X		X[1,2]
M197 20mm Gun	X	X	X	X	X	X
F-18/ M61A1/ M61A2 20mm	X	X	X	X	X	X
GAU-12/U AV-8B 25mm	X	X	X	X	X	X

NOTES:

1. May be performed by qualified Aircrew/Gunner.
2. Helicopter Crew-Served Guns are normally armed, dearmed, and have jams cleared in-flight.

Figure 3-2-1. Organizational Level Maintenance Responsibilities for Guns and Gun Systems

Gun or Gun System	Gun Removal/ Installation	Deficiency Reports	Bore-sighting	Unsched-uled Mainte-nance	Scheduled Mainte-nance	Gun or Gun System Records	Lubrica-tion & Cleaning	Technical Directives
M60D 7.62mm	X[1]	X	X	X	X[1]	X	X[1]	X
M240D 7.62mm	X[1]	X	X	X	X[1]	X	X[1]	X
GAU-17/A 7.62mm	X[1]	X	X	X	X[1]	X	X[1]	X
XM-218 GAU-15/A GAU-16/A .50 Cal	X[1]	X	X	X	X[1]	X	X[1]	X
GAU-21 .50 Cal	X[1]	X	X	X	X[1]	X	X[1]	X
M197 20mm Gun	X	X	X	X	X	X	X	X
F-18/ M61A1/ M61A2 20mm	X	X		X	X	X	X	X
GAU-12/U AV-8B 25mm	X	X		X	X	X	X	X

NOTES:

1. May be performed by qualified Aircrew/Gunner.

Figure 3-2-1. Organizational Level Maintenance Responsibilities for Guns and Gun Systems - contd.

maintenance level and also serve to record the rounds-fired count that determines the scheduled maintenance intervals. The records are maintained by the organizational maintenance activity that holds custody of the gun or gun system and are transferred with the gun or gun system.

3.2.2.5 Lubrication and Cleaning. The periodic lubrication and cleaning requirements for each particular gun or gun system are outlined in the appropriate MIM or MRC, as well as NAVAIR 01-1A-75. Cleaning and lubrication of guns or gun systems is a requirement after firing, as part of the scheduled maintenance of the system, and after unscheduled maintenance is completed.

3.2.2.6 Technical Directives. O-level Aviation Ordnance personnel are responsible for assuring compliance with all technical directives directed to that level.

3.2.2.7 Guns Inventory Tracking and Reporting (GITR). O-level personnel are responsible for inputting accurate rounds fired counts into the GITR database. This does not preclude the gun and gun system record requirements (Scheduled Removal Component (SRC) card) outlined in paragraph 3.2.2.4 of this Volume and in Volume III, Appendix K. All transfers, receipts, Ready-For-Issue (RFI) status, rounds fired, combat/noncombat losses, and configuration status changes will be entered into GITR within 24 hours, as operational tempo allows, not to exceed 72 hours.

CHAPTER 3.3

Intermediate Level Maintenance

Table of Contents

Paragraph	Subject	Page
3.3.1	General	3-3-1
3.3.2	Intermediate Level (I-Level) Maintenance Responsibilities	3-3-1

List of Illustrations

Figure	Title	Page
3-3-1	Intermediate Level Maintenance Responsibilities for Guns and Gun Systems	3-3-2

CHAPTER 3.3

Intermediate Level Maintenance

3.3.1 General. This chapter describes the gun and gun system maintenance actions assigned to Intermediate level (I-level) maintenance activities. I-level maintenance is authorized and designated to be performed by Fleet Readiness Centers (FRCs), Navy Munitions Commands (NMCs), Shipboard Weapons Departments, and Marine Corps Air Station (Station Weapons). I-level maintenance activities perform intermediate maintenance functions on supported guns and gun systems as described in Volume I, Chapter 2.3 of this manual.

3.3.1.1 The I–level maintenance activity has the additional responsibilities of being the aircraft gun and gun system pool custodian.

3.3.2 Intermediate Level (I-Level) Maintenance Responsibilities. I-level maintenance activities perform higher level maintenance actions on guns or gun systems in support of the Organizational level (O-level) (see Figure 3-3-1). The primary objective of I-level maintenance is to issue to the O-level a gun or gun system which is ready for installation. All maintenance actions are performed in accordance with applicable authorized Maintenance Instruction Manuals (MIMs) which have been developed for each gun and gun system. Guns or gun systems inducted into an I-level maintenance activity must be inspected immediately to ensure that all ammunition, ammunition components, or loose powder have been removed and that the gun or gun system is completely safe. The receiving I-level activity must also ensure that Schedule Removal Cards (SRCs), Aeronautical Equipment Service Records (AESRs), Equipment Operating Records (EORs) are received with the gun or gun system are current and accurate, and match the Guns Inventory Tracking and Reporting (GITR) System.

3.3.2.1 Scheduled Maintenance. Guns or gun systems shall be inducted into an I-level maintenance activity on schedules determined by usage of the gun or gun systems. Usage is based on the number of rounds fired by the gun. I-level Aviation Ordnance personnel perform scheduled maintenance actions in accordance with applicable authorized MIMs for the gun or gun system. Guns and gun systems that have fired the allowed predetermined amounts of ammunition or are determined to be beyond capability of maintenance are turned into supply for repair or overhaul.

3.3.2.2 Unscheduled Maintenance. Unscheduled maintenance at I-level maintenance is maintenance required as a result of a firing stoppage, component malfunction, misfire, or other condition that is beyond the maintenance capability of the O-level that has custody of the gun or gun system. Parts replacement during unscheduled maintenance does not change the round interval maintenance schedule for that gun or gun system.

3.3.2.3 Issue and Receipt. I-level activities receive guns and gun systems and components for scheduled or unscheduled maintenance from the O-level. The items are inducted into the I-level activity, inspected or repaired as required, and returned to the Ready-For-Issue (RFI) Pool as RFI assets. If beyond the maintenance capability of the I-level activity, the item is turned in

Gun or Gun System	Sched-uled Mainte-nance	Unsched-uled Maintenance	Issue/ Receipt	Deficien-cy Reports	Lubrica-tion & Cleaning	Gun Jam Clearing	Gun System Records	Technical Directi-ves
M60D 7.62mm	X	X	X	X	X		X	X
M240D 7.62mm	X	X	X	X	X		X	X
GAU-17/A 7.62mm	X	X	X	X	X		X	X
XM-218 GAU-16/A .50 Cal	X	X	X	X	X		X	X
GAU-21 .50 Cal	X	X	X	X	X		X	X
M197 20mm Gun	X	X	X	X	X	X	X	X
F-18/ M61A1/ M61A2 20mm	X	X	X	X	X	X	X	X
GAU-12/U AV-8B 25mm A/A49E-10	X	X	X	X	X	X	X	X

Figure 3-3-1. Intermediate Level Maintenance Responsibilities for Guns and Gun Systems

to supply. When the O-level maintenance activity turns in a gun or gun system to an I-level maintenance activity, the O-level activity places a demand on the RFI Pool for a replacement gun or gun system. A RFI asset, if available, is issued to the O-level activity. If a RFI gun or gun system is not available, the O-level activity must wait until the I-level activity completes the required maintenance on the next available gun or gun system and returns it to a RFI status.

3.3.2.4 Deficiency Reports. Deficiency reports are initiated by I-level maintenance when a deficiency is discovered during the performance of any of the assigned I-level maintenance actions. Deficiency reporting procedures are contained in Volume I, Chapter 4.6.

3.3.2.5 Lubrication and Cleaning. The periodic lubrication and cleaning requirements for each particular gun or gun system are outlined in the appropriate MIM or MRC, as well as NAVAIR 01-1A-75. NAVAIR 01-1A-75 is an integral part of the scheduled maintenance program for guns or gun systems. Guns and gun systems inducted into an I-level maintenance activity for unscheduled maintenance will be cleaned and lubricated as specified in the applicable authorized MIMs or MRC prior to reissue.

3.3.2.6 Gun or Gun System Records. Each gun or gun system is accompanied by an SRC card or an AESR. The SRC or AESR for each gun or gun system inducted into an I-level maintenance activity will be screened for completeness and accuracy upon receipt of the gun or gun system. All maintenance actions performed on the gun or gun system, while in the custody of the I-level maintenance activity, will be entered into the applicable document (SRC or AESR). The record shall be transferred with the gun or gun system when it is returned to the supply system or returned to the Depot level for maintenance.

3.3.2.7 Technical Directives. I-level Aviation Ordnance personnel are responsible for assuring compliance with technical directives such as Aviation Armament Bulletins (AABs) and Aviation Armament Changes (AACs).

3.3.2.8 Guns Inventory Tracking and Reporting. This does not preclude the gun and gun system records requirements outlined in Paragraph 3.3.2.6 of this Volume and in Volume III, Appendix K. All issues, transfers, receipt, RFI status, Beyond Capability of Maintenance (BCM) actions, combat/non-combat losses, and configuration status changes will be entered into GITR within 24 hours, as operational tempo allows, not to exceed 72 hours.

CHAPTER 3.4

Depot Level Maintenance

Table of Contents

Paragraph	Subject	Page
3.4.1	General	3-4-1
3.4.2	Depot Level (D-level) Maintenance Responsibilities	3-4-1
3.4.3	D-Level Maintenance Actions	3-4-1
3.4.4	Gun or Gun System Records	3-4-1
3.4.5	Technical Directives (TDs)	3-4-3

List of Illustrations

Figure	Title	Page
3-4-1	Assignment of Depot Level Gun or Gun System Maintenance Responsibilities	3-4-2

CHAPTER 3.4

Depot Level Maintenance

3.4.1 General. This chapter discusses the maintenance actions assigned to Depot level (D-level) maintenance activities. D-level activities perform maintenance on guns and gun systems and components that are beyond maintenance capability of lower maintenance level activities. D-level activities support the Organizational and Intermediate levels by providing technical assistance through the use of more extensive facilities, skills, and materials. D-level functions are carried out in industrial establishments or in the field by personnel from such establishments. D-level industrial establishments may be government-owned/operated, government-owned and contractor-operated, or contractor-owned/operated.

3.4.2 Depot Level (D-level) Maintenance Responsibilities. The activities assigned to perform D-level maintenance are shown in Figure 3-4-1. D-level maintenance responsibilities include:

a. The maintenance or restoration of inherent design service levels of performance, reliability, and material condition.

b. Designing or assisting in the design of modifications intended to improve design levels of performance, reliability, or material condition.

c. The manufacture of items and component parts otherwise not available, when that action is deemed necessary and appropriately authorized.

d. Providing support services and functions, including professional engineering and calibration services, and field teams to support Organizational level or Intermediate level maintenance when required and directed.

e. Any maintenance functions utilizing hazardous materials are to be accomplished in accordance with the appropriate gun or gun system Maintenance Instruction Manual (MIM) and NAVAIR 01-1A-75.

3.4.3 D-Level Maintenance Actions. D-level maintenance actions include, but are not limited to, the following: complete rebuild of guns, gun systems, or components through reclamation, refurbishment, overhaul, repair, replacement, adjustment, servicing, or replacement of consumables. Depot actions directly applicable to design modification include such things as alterations, conversions, engineering changes, modernizations, etc.

3.4.4 Gun or Gun System Records. Each gun or gun system is accompanied by a Scheduled Removal Component (SRC) card or Aeronautical Equipment Service Record (AESR). The SRC or AESR for each gun or gun system inducted into a D-level activity will be screened for completeness and accuracy upon receipt of the gun or gun system. All maintenance actions performed on the gun or gun system while in the custody of the D-level maintenance activity will be entered into the applicable record (SRC or AESR) for that gun or gun system. The SRC or AESR shall be transferred with the matching gun or gun system when it is issued.

Gun or Gun System	Naval Surface Warfare Center Div., Crane, IN	Hill AFB Ogden, UT	NAVAIR-DEPOT Jacksonville, FL
M60D 7.62mm	X		
M240D 7.62mm	X		
GAU-17/A 7.62mm	X		
GAU-16/A .50 Cal	X		
GAU-21 .50 Cal	Not assigned	Not assigned	Not assigned
XM-218 .50 Cal	X		
M197 20mm		X	
M61A1/M61A2 20mm		X	
F/A-18 Gun Pallet A/A49A-1			X
M89E1		X	

NOTES:

1. A/A49E-11, A/A49E-13 and GAU-21 currently have no Depot level activity assigned. GAU-12/U.
2. A/A49E-10/GAU-12 Logistics Support Facility (LMS) at Naval Air Warfare Center China Lake due to no dedicated Depot.

Figure 3-4-1. Assignment of Depot Level Gun or Gun System Maintenance Responsibilities

3.4.5 Technical Directives (TDs). D-level maintenance personnel are not only responsible for assuring that TDs, Airborne Weapon Bulletins (AWBs), Airborne Weapon Changes (AWCs), Aviation Armament Changes (AACs), Aviation Armament Bulletins (AABs), are complied with, but they also assist in the development and verification of TDs that ultimately affect them. Assistance includes engineering change proposal review, development of the resulting TD, and verification prior to implementation of the TD.

SECTION 4

Air Launched Decoys

Table of Contents

Chapter	Subject	Page
4.1	Introduction	4-1-1
4.2	Organizational Level Maintenance	4-2-1
4.3	Intermediate Level Maintenance	4-3-1
4.4	Depot Level Maintenance	4-4-1

CHAPTER 4.1

Introduction

Table of Contents

Paragraph	Subject	Page
4.1.1	General	4-1-1
4.1.2	Responsibilities	4-1-1
4.1.3	Scope	4-1-1
4.1.4	Applicability	4-1-2
4.1.5	Tactical Air Launched Decoy (TALD)/Improved Tactical Air Launched Decoy (ITALD) Maintenance Concepts	4-1-4
4.1.6	All-Up-Round (AUR) Maintenance Concept	4-1-4

List of Illustrations

Figure	Title	Page
4-1-1	Aircraft Application and Configuration Data for TALD/ITALD	4-1-3
4-1-2	TALD/ITALD Maintenance Pipeline	4-1-5

CHAPTER 4.1

Introduction

4.1.1 General. This section addresses maintenance program management of air launched decoys. Maintenance program management, during a weapon system's life cycle deployment phase, is a critical management function to be performed due to the impact of maintenance requirements on the effective use of personnel, materials, facilities and fiscal resources. Maintenance program management functions include maintenance planning, coordinating, budgeting and evaluating program progress.

4.1.2 Responsibilities.

4.1.2.1 The Assistant Commander for Logistics and Fleet Support, through the Logistics Management Division, is responsible for the program management and funding of air launched decoy maintenance programs. The Commander, Naval Air Systems Command (COMNAVAIRSYSCOM) is responsible for management, integrated logistics support and maintenance engineering functions pertinent to air launched decoys.

4.1.2.2 Assistant Program Managers, Logistics (APML) plan and implement integrated logistics support and project support management activities for Tactical Air Launched Decoys (TALD) and Improved Tactical Air Launched Decoys (ITALD). The APML is directly responsible to the Program Executive Officer (PEO), Strike Weapons and Unmanned Aviation, aerial targets and decoys, for logistics aspects of acquisition programs from inception to deployment and eventual phase out from active inventory. The TALD/ITALD APML is directly responsible for the overall planning and development of operationally effective and cost-effective support systems.

4.1.2.3 In-Service Engineer (ISE)/Systems Engineer Fleet Support Team (FST) will monitor and validate Conventional Ordnance Deficiency Reports (CODRs) received from user activities and will determine Engineering Investigation (E/I) requirements. The E/I validation will be the component repair at the decoy vehicle, Weapon Replaceable Assemblies (WRAs) and Peculiar Support Equipment (PSE) level. This function will be accomplished by the direction of the FST, utilizing program WRAs assets anticipated to support Fleet requirements. Vehicles determined to be Beyond Capability of Maintenance (BCM) at the O-level or I-level facilities and at FST level will be returned to the contractor, via screening from FST. Vehicles not under warranty are sent to the appropriate Naval Weapons Station for Depot level processing until deemed cost effective to set up repairs.

4.1.2.4 Volume I, Chapter 2.2 defines maintenance functions and Chapter 2.3 assigns maintenance responsibilities that apply to air launched decoys.

4.1.3 Scope. Air launched decoys provide operating forces with increased capability in the areas of reconnaissance, surveillance and electronic counter-countermeasures. These highly versatile vehicles may be non-powered and non-recoverable TALD or powered and non-recoverable ITALD. The maintenance of air launched decoys involves the Airborne Weapons Assembly Manual (WAM), NAVAIR 11-140-6.1, Naval Aviation Maintenance Program (COMNAVAIRFORINST 4790.2 series)

and this manual. Maintenance program assignments are predicated on the individual air launch decoys system maintenance requirements and its end use.

4.1.3.1 Non-recoverable Decoys. Maintenance and maintenance data reporting requirements for air launched decoys used as non-recoverable decoys are covered by this manual.

4.1.4 Applicability. This section is applicable to the TALD/ITALD. The TALD is an air launched, preprogrammed, unpowered, glide chaff, Radio Frequency (RF) passive and RF active vehicle used to deceive and saturate enemy integrated air defenses during strike aircraft operations. While form, fit and function remain the same within version, manufacturing differences have produced variants. The ITALD is an air launched, preprogrammed, powered RF passive/active vehicle used to deceive and saturate enemy integrated air defenses during strike aircraft operations. It is a pre-planned product improvement that adds turbojet propulsion, radar controlled, low-level flight and Global Positioning System (GPS) navigational capability to the ITALD. Its official designation is ADM-141C. The ITALD is only compatible with and can be launched from the BRU-42 Improved Triple Ejector Rack (ITER). Figure 4-1-1 depicts aircraft application and configuration data for the TALD and ITALD.

4.1.4.1 The ITALD provides the Navy and Marine Corps operational elements with an effective radar decoy capability. It is a pre-planned product improvement that adds turbojet propulsion and low-level navigation capability to the ADM-141A/B TALD. The wing assemblies consist of fiberglass extrusions with receiver antennas installed on the lower surfaces and a transmitting antenna located in each wing. When deployed by the pressure actuation and wing actuator assemblies, the wings provide the decoy with aerodynamic lift during flight. A computer within each vehicle is preprogrammed with flight profile data prior to loading. It provides flight management and controls the vehicle through a series of planned maneuvers after launch. A nose cone assembly serves as the aerodynamic forward end of the ITALD vehicle structure.

a. The ITALD is capable of captive carry to a maximum altitude of 50,000 feet and maximum mach of 0.9.

b. The ITALD is capable of being launched at altitudes up to 40,000 feet and mach numbers up to 0.9. It is capable of 1G sustained flight at altitudes up to 20,000 feet. The vehicle engine start envelope is any altitude below 15,000 feet.

c. Independent Timing System (ITS) unit controls ITALD flight distance (safety zone/impact area) areas of mission operation and could be congested by air or afloat traffic. The ITS unit is an add-on device, which is installed by hand on the J3 test connector located in the tail fairing area of the ITALD. The ITS uses power from the ITALD and at the given termination time electronically grounds the roll gyro input. The resulting roll input will command the elevons to rotate in such a way that the ITALD will spin and lose stability. This method of terminating flight is in addition to the current engine scheduled shutdown and dive at the last waypoint in waypoint mode or preplanned termination time in the Target of Opportunity (TOO) mode. Refer to Weapons Assembly Manual NAVAIR 11-140-6.1 (see Figure 4-1-1).

d. For flight, the decoy vehicles are loaded on an ITER configured on the applicable aircraft. The number of decoy vehicles carried by a particular aircraft depends upon the mission requirements, type of aircraft employed and the type and number of ejector racks installed on that aircraft. Once released from an aircraft, the decoy vehicle becomes expendable and automatic flight control begins.

Item	Parent Rack	Aircraft Appli-cation	Accessory Suspen-sion Equipment	Loading Manuals/Checklists	Technical Manual Organizational/ Intermediate Level Maintenance
TALD/ ITALD	BRU-32/A	F/A-18	BRU-42 (ITER)	NAVAIR A1-F18AE-LWS-000 F/A-18 Series Airborne Weapons/Stores Loading Manual (Aircraft 161353 and Up) NAVAIR A1-F18AE-LWS-200, F/A-18A-D Conventional Weapons Checklist	NAVAIR 11-140-6.1 Weapons Assembly Manual NAVAIR 01 A/B37U-1 Organizational/ Intermediate (Fleet) Maintenance Instructions (TALD) all Models and TALD Manual NAVAIR 11-120-77 Ship Weapon Installation Manual ADM-141 Tactical Air Launch Decoy (TALD) (Formerly A/B37U-1/2(V)) A1-F18AE-LWS-730 F/A-18 Series Conventional Weapons Checklist NAVAIR 01-ADM141C-1 Organizational/ Intermediate (Fleet) Maintenance Instructions (ITALD) ADM-141C NAVAIR 11-140-6.1-4 Airborne Weapons Assembly Checklist (TALD) NAVAIR 11-140-6.1-1-9 Airborne Weapons Assembly Organizational/Intermediate Checklist (ITALD) NAVAIR 11-140-6.1-1-10 Airborne Weapons Assembly Checklist Missile Testing and Reprogramming Procedures NAVAIR 11-140-25 Armament Weapons Support Equipment (AWSE) Configuration Manual NAVAIR 01-1A-75 Airborne Weapons and Associated Equipment, Consumable Material Applications and Hazardous Materials Authorized Use List

Figure 4-1-1. Aircraft Application and Configuration Data for TALD/ITALD

4.1.5 Tactical Air Launched Decoy (TALD)/Improved Tactical Air Launched Decoy (ITALD) Maintenance Concepts. The Navy employs three levels of maintenance for the TALD and ITALD. Organizational level (Ashore and Afloat) upload and download the vehicle to or from the aircraft electrical and mechanical launch interfaces, bomb racks and conduct prepost load inspections. The Intermediate level removes or returns the decoy from/to the reusable shipping container, assembles or disassembles stabilizers and ventral fin, ITS units, replaces selected structural components and performs prepost buildup inspections. Decoys that fail acceptance inspection or system test will initiate CODR to FST for corrective action or shipping instructions before shipping to depot for repair. The FST/Depot will fault isolate to a failed WRA utilizing the TTU-480/E Integrated System Tester for TALD or TTU-585/E Improved Decoy Tester Programmer (IDTP) for TALD/ITALD. Failed WRAs will be replaced in lieu of repair (except for selected key component items) and the decoy returned to Ready for Issue status. The TALD/ITALD maintenance pipeline can be found in Figure 4-1-2.

4.1.6 All-Up-Round (AUR) Maintenance Concept. The AUR maintenance concept is a maintenance methodology designed to accommodate the processing of the TALD/ITALD throughout the logistics cycle. The objective of the AUR maintenance concept as it applies to the TALD/ITALD, is to issue a packaged, nearly complete assembled round to permit rapid usage by the Fleet.

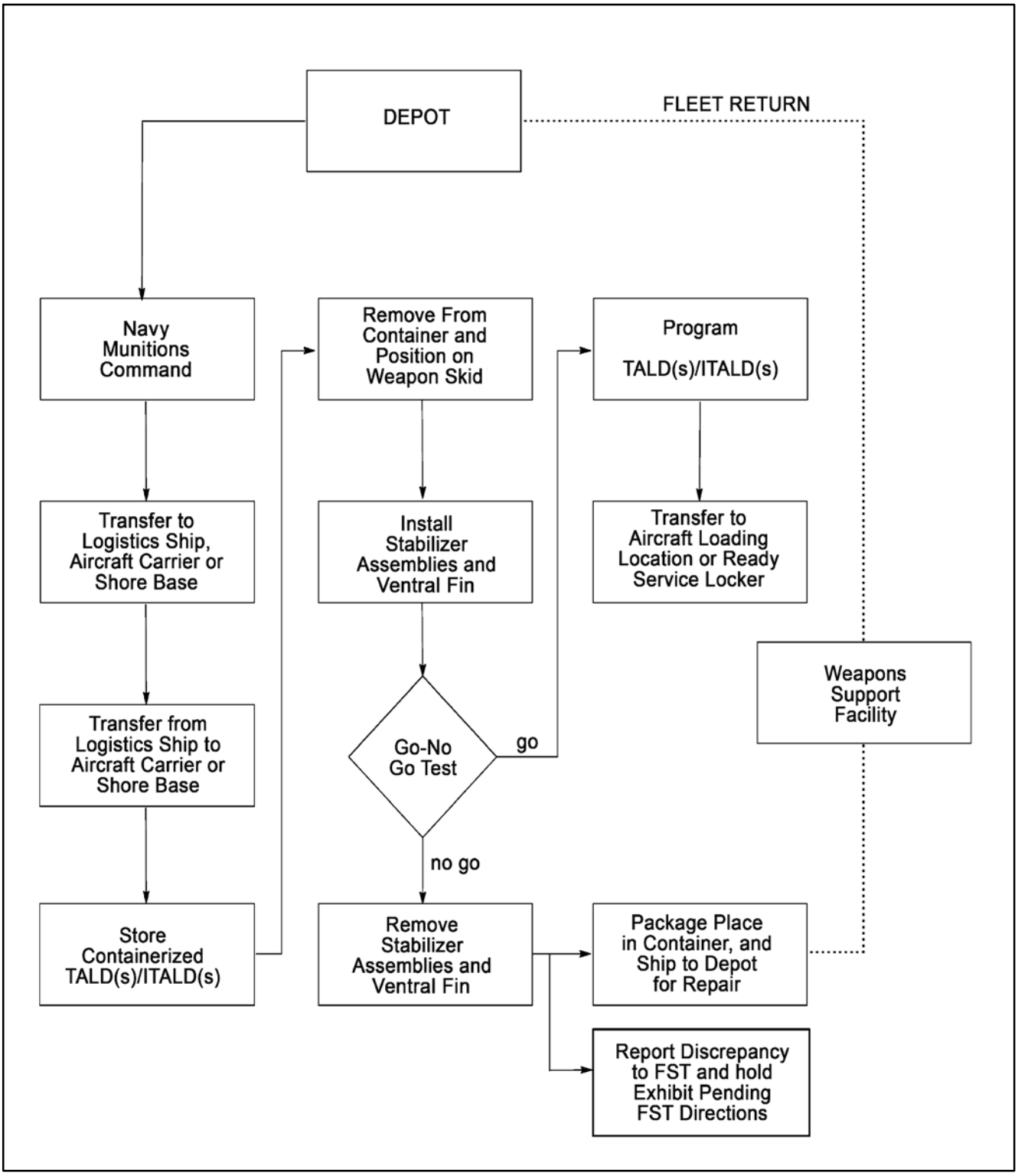

Figure 4-1-2. TALD/ITALD Maintenance Pipeline

CHAPTER 4.2

Organizational Level Maintenance

Table of Contents

Paragraph	Subject	Page
4.2.1	General	4-2-1
4.2.2	Organizational Level (O-Level) Maintenance Responsibilities	4-2-1

CHAPTER 4.2

Organizational Level Maintenance

4.2.1 General. This chapter discusses the maintenance actions assigned to the Organizational level (O-level) which are performed in support of the day-to-day operation of the unit. O-level maintenance is performed by Aviation Ordnance technicians assigned to O-level maintenance activities. Volume I, Chapter 2.3 of this manual describes the objectives and structure of these activities. O-level maintenance directly supports and maintains the aircraft weapon system, which consists of the aircraft, the Tactical Air Launched Decoys (TALDs)/Improved Tactical Air Launched Decoys (ITALDs) and the associated interface items.

4.2.2 Organizational Level (O-Level) Maintenance Responsibilities. Under the All-Up-Round (AUR) maintenance concept, O-level maintenance actions are tailored within the constraints of the O-level's manpower and maintenance capabilities to ensure the TALD and ITALD will perform its assigned end mission. Assigned maintenance actions are listed in Chapter 4.1, Figure 4-1-1. All maintenance actions are to be performed in accordance with the applicable Aircraft Airborne Weapons/Stores Loading Manual or Checklist.

a. Release and Control System Check

b. Aircraft Preparation and Inspection

c. TALD/ITALD Receipt and Inspection

d. TALD or ITALD Preparation for Loading

e. Aircraft Station Preparation

f. TALD/ITALD Loading

g. Postload Quality Assurance Inspection

h. Arming

i. Post Operational Inspection

j. Dearming

k. TALD/ITALD Downloading

l. Deficiency Reporting

m. Technical Directives

4.2.2.1 Technical Directives. Organizational level ordnance personnel are responsible for assuring that TALD and ITALD Airborne Weapon Bulletins (AWBs), Airborne Weapon Changes (AWCs) are incorporated.

4.2.2.2 Expenditures. TALD/ITALD expenditures shall be reported through the All Weapons Information System (AWIS) website at https://awis.navair.navy.mil.

CHAPTER 4.3

Intermediate Level Maintenance

Table of Contents

Paragraph	Subject	Page
4.3.1	General	4-3-1
4.3.2	Intermediate Level (I-Level) Maintenance Responsibilities	4-3-1

CHAPTER 4.3

Intermediate Level Maintenance

4.3.1 General. This chapter describes the maintenance actions assigned to Intermediate level (I-level) maintenance activities. I-level maintenance is authorized and designated to be performed by Navy Munitions Command (NMC) Detachments, Shipboard Weapons Departments, and Marine Corps Air Stations (Station Weapons) as described in Volume I, Chapter 2.3 of this manual.

4.3.2 Intermediate Level (I-Level) Maintenance Responsibilities. Under the All-Up-Round (AUR) maintenance concept, I-level maintenance activities designated in Volume I, Chapter 2.3 perform higher level maintenance actions on Tactical Air Launched Decoys (TALD) and Improved Tactical Air Launched Decoys (ITALD) in support of the Organizational level. The primary objective of I-level maintenance is to issue to the Organizational level a TALD or ITALD which requires minimal maintenance actions to be performed at that level, allowing expedient preparation and loading of the vehicle. Assigned maintenance actions are listed in Chapter 4.1, Figure 4-1-1. All maintenance actions are to be performed in accordance with the applicable Weapons Assembly Manual (WAM).

a. Removal from Storage

b. Container Inspection

c. Unpackaging

d. Receipt Inspection

e. Assembly

f. Testing and Programming

g. Decoy Tester Programmer Maintenance

h. Cleaning

i. Ready Service Inspection

j. Packaging

k. Deficiency Reporting

l. Requisitioning

m. Shipping

n. Technical Directives

o. Record Keeping and Reporting

4.3.2.1 Receipt Inspection. Damaged stabilizers, ventral fin and ITS unit are replaceable at the I-level and discarded at Depot. However, physical damage to the TALD/ITALD vehicle or

evidence of a fuel leak in an ITALD vehicle, contact FST for corrective action before repacking and returning to depot for repair.

NOTE

ITS units do not come with ITALD and are ordered through Naval Supply Systems Command Global Logistics Support (NAVSUP GLS AMMO).

CHAPTER 4.4

Depot Level Maintenance

Table of Contents

Paragraph	Subject	Page
4.4.1	General	4-4-1
4.4.2	Assignment of Depot Level (D-Level) Maintenance Responsibilities	4-4-1
4.4.3	Depot Level Maintenance Actions	4-4-1
4.4.4	Depot Level Maintenance Responsibilities	4-4-1
4.4.5	Depot Maintenance Processing	4-4-2
4.4.6	Technical Directives (TDs)	4-4-2
4.4.7	Record Keeping and Reporting	4-4-2

CHAPTER 4.4

Depot Level Maintenance

4.4.1 General. This chapter discusses the maintenance actions assigned to Depot level (D-level) maintenance activities. Under the All-Up-Round (AUR) maintenance concept, Depot activities perform maintenance on Tactical Air Launched Decoys (TALD) and Improved Tactical Air Launched Decoys (ITALD) that are beyond the maintenance capability of Intermediate level activities. Fleet Support Team (FST), Naval Air Warfare Center Weapon Division (NAVAIR-WARCENWPNDIV), China Lake, CA is the designated point-of-contact for all support issues. D-level activities support the Organizational and Intermediate levels by providing technical assistance in carrying out those functions which are beyond their responsibility or capability through the use of more extensive facilities, skills and materials. D-level functions are carried out in industrial establishments or in the field by personnel. D-level industrial establishments may be government-owned/operated, government-owned and contractor-operated or contractor-owned/operated.

4.4.2 Assignment of Depot Level (D-level) Maintenance Responsibilities. FST, NAVAIR-WARCENWPNDIV, China Lake, CA is the designated point of contact for all support issues and is the depot repair facility for TALD/ITALD and ancillary equipment which includes the TTU-473/E for TALD and TTU-585/E Improved Decoy Tester Programmer (IDTP) for TALD/ITALD.

4.4.3 Depot Level Maintenance Actions. Maintenance actions assigned to the depot should contact the FST for the following tasks:

a. All maintenance and modification actions necessary for the rework and repair of TALD or ITALD under their cognizance.

b. Manufacture of items and component parts otherwise not available when that action is deemed necessary and is appropriately authorized.

c. Provide support service functions, including professional engineering, technology, calibration services and field teams to support Organizational level or Intermediate level maintenance when required and directed.

d. Any maintenance functions utilizing hazardous materials are to be accomplished in accordance with the appropriate TALD/ITALD maintenance documentation listed in Chapter 4.1, Figure 4-1-1.

4.4.4 Depot Maintenance Maintenance Responsibilities.

4.4.4.1 D-level maintenance responsibilities include those actions required to maintain or restore the inherent design service levels of performance, reliability and material condition; they span complete rebuild through reclamation, refurbishment, overhaul, repair, replacement, adjust-

ment, servicing and replacement of consumables. This also includes inspection, calibration and testing.

4.4.4.2 D-level maintenance is also responsible for all modification actions required to change or improve design levels of performance, reliability and material. The term modification, as used in this manual, includes alteration, conversion, engineering change, modernization, etc.

4.4.5 Depot Maintenance Processing. All Depot maintenance actions are performed in accordance with the applicable authorized instructions.

4.4.6 Technical Directives (TDs). Depot level maintenance personnel are responsible for assuring that **TD**s, Airborne Weapon Bulletins (AWBs), and Airborne Weapon Changes (AWCs) are complied with. In addition, they also assist in the development and verification of TDs that ultimately affect them. This assistance includes Engineering Change Proposal review, development of the resulting TD and verification prior to implementation of the TD. Refer to Volume I, Section 5.

4.4.7 Record Keeping and Reporting.

4.4.7.1 D-level maintenance activities are responsible for all record keeping and reporting actions related to TALD or ITALD processing. This includes Ordnance Information System (OIS) reporting requirements, local applicable directives and maintenance data system reporting. The maintenance data system and OIS are described in Volume II, Section 2.

4.4.7.2 Reporting to the OIS for TALD or ITALD is via transaction item reporting, Ammunition Transaction Reports (ATRs) and the Serialized Lot Item Tracking System (STITS), while commercial contractors report via Retail Ordnance Logistics Management System (ROLMS) or letter format whenever there is any change in the status or configuration of a TALD or ITALD.

SECTION 5

Targets

Table of Contents

Chapter	Subject	Page
5.1	Introduction	5-1-1
5.2	Organizational Level Maintenance	5-2-1
5.3	Intermediate Level Maintenance	5-3-1
5.4	Depot Level Maintenance	5-4-1

CHAPTER 5.1

Introduction

Table of Contents

Paragraph	Subject	Page
5.1.1	General	5-1-1
5.1.2	Responsibilities	5-1-1
5.1.3	Applicability	5-1-1
5.1.4	Aerial Targets	5-1-4
5.1.5	Land Targets	5-1-5
5.1.6	Tow Target Systems	5-1-5
5.1.7	Developmental Acquisition Programs	5-1-5
5.1.8	Target Maintenance Actions	5-1-6
5.1.9	Maintenance Philosophy	5-1-6
5.1.10	Target Maintenance Documentation	5-1-6
5.1.11	Target and Engine Logbooks	5-1-7

List of Illustrations

Figure	Title	Page
5-1-1	Standard Organizational (Limited Intermediate) Level Target Maintenance Department	5-1-2
5-1-2	Assignment of Target Maintenance Levels by Maintenance Activity	5-1-3
5-1-3	Identification of Aerial Target Maintenance and Deficiency Reporting	5-1-3

CHAPTER 5.1

Introduction

5.1.1 General. This section addresses maintenance program management of targets. Maintenance program management is a critical management function to be performed during a target system's deployment life cycle phase due to the impact of maintenance requirements on the effective use of personnel, materials, facilities, and fiscal resources. Maintenance program management functions include maintenance planning, coordinating, budgeting, and evaluating program progress. Aerial and land targets are under the technical cognizance of the Commander, Naval Air Systems Command (COMNAVAIRSYSCOM).

5.1.2 Responsibilities.

5.1.2.1 The Assistant Commander for Logistics and Fleet Support, through the Logistics Management Division, is responsible for the program management and funding of target system maintenance programs. COMNAVAIRSYSCOM is responsible for management, integrated logistics support and maintenance engineering functions pertinent to target systems.

5.1.2.2 Assistant Program Manager, Logistics (APML) plans and implements integrated logistics support and project support management activities for target systems. Deputy Assistant Program Managers, Logistics (DAPMLs) have been designated at the Naval Air Warfare Center Weapons Division (NAVAIRWARCENWPNSDIV) for all target systems, except full scale aerial targets, to provide life cycle logistics management support to the APML. The field activity DAPMLs are responsible to the APML for implementation of the approved logistics program. The APML is directly responsible to the target systems Product Support Manager (PSM) for Aerial Targets for the logistics aspects of acquisition programs from inception through deployment and eventual phase out from the active inventory.

5.1.3 Applicability.

5.1.3.1 This section applies to targets and presents a compilation of target data enabling the weapons system community to select a target which closely simulates enemy threats. Target selection must be carefully made to test the effectiveness of a particular weapon system. Emphasis is placed on selecting suitable targets for weapons evaluation and Fleet training as weapons become more specialized and their performance evaluation more complex.

5.1.3.2 This section describes target performances and identifies which targets are used for Fleet training. Figure 5-1-1 depicts Standard Organization (Limited Intermediate) Level Target Maintenance Department. Figure 5-1-2 is the Assignment of Target Maintenance Levels by Maintenance Activity. Figure 5-1-3 identifies Aerial Target Maintenance and Deficiency Reporting.

5.1.3.3 Target systems are divided into three categories: Aerial targets, Land targets, and Tow target systems. Within each category there are different types of targets as described in paragraphs 5.1.4 through 5.1.6 of this volume.

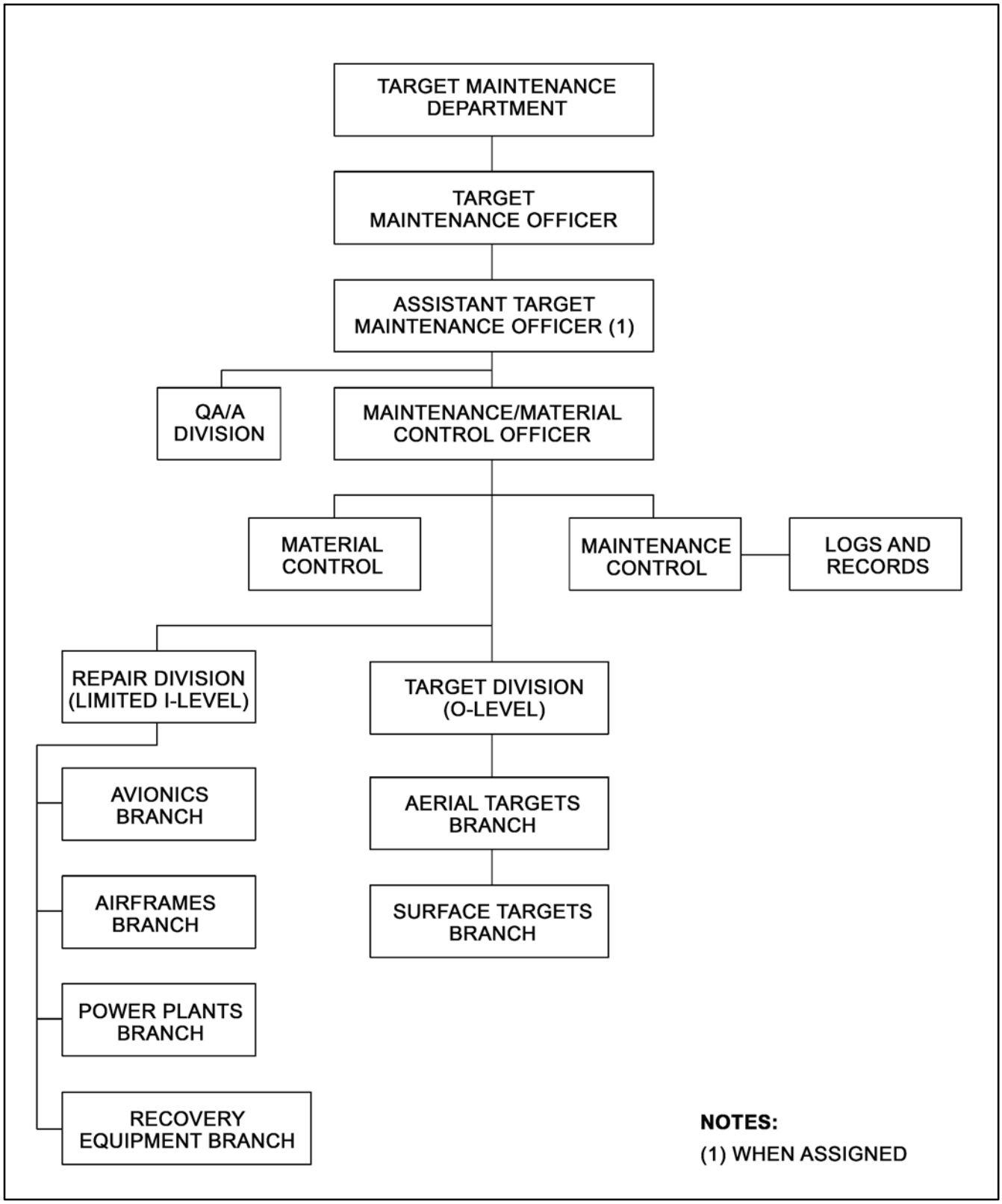

Figure 5-1-1. Standard Organizational (Limited Intermediate) Level Target Maintenance Department

MAINTENANCE ACTIVITY	BQM-34	BQM-74	AQM-37	QLT-1C	TDU-32 SERIES	GQM-163A
NAVAIRWARCENWPNSDIV White Sands, NM	O/I					
PACMISRANFAC Barking Sands, HI	O/I	O/I				
NAVAIRWARCENWPNSDIV Point Mugu, CA	O/I	O/I	O		O/I	O
NASA WFF Wallops Island, VA	O					
NAWCAD, Pax River, Norfolk, VA		O/I				
Dam Neck Detachment Norfolk, VA	O/I	O/I				
COMFLEACT Okinawa NAF Kadena, JA		O/I[1]				
NAF El Centro, CA				O/I		
Naval Weapon Station TR FAC Boardman, OR				O/I		
MCAS Yuma, AZ				O/I		
NAVAIRWARCENWPNSDIV China Lake, CA				O/I		
F/A-18 Organizational Maintenance Activity (OMA)					O	O

O - Organizational Level Maintenance; I - Intermediate Level Maintenance

NOTES:

1. FAO Kadena has no engine overhaul capability

Figure 5-1-2. Assignment of Target Maintenance Levels by Maintenance Activity

TARGET SYSTEM	MAINTENANCE PROCESS		DEFICIENCY REPORTING	
	OPNAVINST 8000.16D Target/System	COMNAVAIRFORINST 4790.2 Series Target/System	OPNAVINST 8000.16D Target/System	Explosive Components
AQM-37	X		X	X
BQM-34	X		X	X
BQM-74	X		X	X
TDU-32 Series	X	X	X	
GQM-163A	X		X	X

NOTES:

1. For deficiency reporting, refer to Volume I, Chapter 4.6 of this manual.

Figure 5-1-3. Identification of Aerial Target Maintenance and Deficiency Reporting

5.1.3.4 A user must have target allocations established before submitting a request for target services. Prior to submitting a request for services, prospective target users should review the Target Users Handbook. Using target data contained in the handbook, formulate a tentative listing of candidate targets and Target Auxiliary/Augmentation System (TA/AS) which may satisfy the requirement.

5.1.4 Aerial Targets.

5.1.4.1 BQM-34S Missile Target. This target is a recoverable, remotely controlled, subscale, subsonic target capable of speeds up to mach 0.9 and altitudes from 10 to 50,000 feet. It is propelled during flight by single J-69 or J85-100 turbojet engine which produces 1,940/2,850 pounds of thrust at full throttle at sea level. The target is designed to be surface launched from short rail or zero-length ground launchers using a single Jet Assisted Takeoff (JATO) or air launched from DC-130 aircraft. The target is controllable through normal flight maneuvers with capabilities of performing up to 5G turns. The system transmits target telemetry on the tracking down-link signal. Target recovery is executed by deploying a two-stage parachute. Recovery can be accomplished on land or at sea. When recovery is made at sea, the target can be retrieved by boat or helicopter.

5.1.4.2 BQM-74E Missile Target. This target is a recoverable, remotely controlled, subscale, subsonic target capable of speeds up to mach 0.75 and altitudes from 7 to 40,000 feet. It is propelled during flight by a single J400-WR-404 turbojet engine which produces 240 pounds thrust at full throttle at sea level. The target is designed to be surface launched from a zero length ground launcher utilizing dual JATO. When equipped with an air launch kit, the target can be air launched from the G-1 commercial aircraft. The target is controlled through normal flight maneuvers with the capability of performing 75-degree bank angle turns. The target is normally controlled by a fixed or portable integrated tracking and control system transponder. Target recovery is executed by parachute and can be accomplished either on land or at sea by boat or helicopter.

5.1.4.3 AQM-37C Missile Target. This target is an air launched, supersonic, preprogrammed, non-recoverable target, capable of flying at various speeds and altitudes. The current launch aircraft is the F-16. The target is capable of speeds from mach 0.7 to 4.0 at altitudes of 1,000 to 100,000 feet and has a range of approximately 155 nautical miles. Software modifications have enabled the target to also perform Tactical Ballistic Missile (TBM) and Anti-Radiation Missile (ARM) type profiles for engagement, tracking, or training. The target is capable of performing TBM type profiles of over 300 kft in altitude and up to mach 5.0, when launched supersonically at 50 kft, 1.8 mach, as well as low and mid-altitude ballistic profiles when launched at lower speeds and altitude. The target is powered by a LR-64 liquid propellant, engine using Mixed Amine Fuel and Inhibited Red Fuming Nitric Acid. The AQM-37 series requires specific hypergolic storage and certification as described in OPNAVINST 8020.14/MCO P8020.11. The target can be flown with or without Ultra-High Frequency (UHF) command control. When command control is installed, limited control capability (right and left turns, dive and pullout) is available to increase profile accuracy. A number of mission essential installation sets may be installed to augment the target for radar cross section, scoring, tracking, and command destruct capability.

5.1.4.4 GQM-163A Supersonic Sea Skimming Target (SSST). The GQM-163A is a non-recoverable, supersonic aerial target, capable of speeds in excess of mach 2.5 and cruise altitudes

from 15.0 to 66.0 feet. The GQM-163A is surface (land) launched. The GQM-163A system target air vehicle is also capable of operating with current augmentation, scoring and range hardware. The GQM-163A program is in Full Rate Production (FRP) following Engineering, Manufacturing and Development (EMD) and a Low Initial Rate Production (LRIP) Phase. The basic contract was awarded in June 2000 for 6 EMD target vehicles which included the design, development, test and delivery of a high-fidelity supersonic sea skimming aerial target. The LRIP-I and LRIP-II target vehicles were procured as options in contract. The option for the first Full Rate Production, commonly referred to as FRP-1, targets followed a MS III decision in June 2005. This contract included requirements for target vehicle launch equipment, support equipment and technical data. The Naval Air Systems Command (NAVAIRSYSCOM) intends to continue GQM-163A spiral upgrades/evolutionary development to keep pace with evolving threat characteristics.

5.1.5 Land Targets. The following is the only applicable land target:

5.1.5.1 QLT-1C Land Target. The QLT-1C land target is a remotely controlled, multi-use, moving target platform which simulates several types of land vehicles. The primary use is to train aircrews in air-to-surface weapon delivery techniques. The lightweight tubular frame, with its Volkswagen engine, modified running gear, and automatic transmission and transaxle, make the QLT-1C a highly maneuverable target. Actuators control the gear shifting, steering, accelerating, and braking. The target has a top speed of 55 miles per hour, an average fuel consumption of 30 miles per gallon, and a 10 gallon fuel tank. A typical QLT-1C range is comprised of a central control tower where the remote control operator observes the full length of the operating track. The track runs on a line perpendicular to the control tower at a distance of 2,500 to 4,000 feet. The length of the track is typically 3,000 to 6,000 feet and the width is 300 to 500 feet. The target contains two rotating beacon lights, a white one for informing the remote control operator that the engine is running and a red one to warn the attacking aircrew that the target is not ready for an attack. The target can be augmented with locally manufactured radar reflectors to improve the ability of the aircrew to track the target.

5.1.6 Tow Target Systems.

5.1.6.1 TDU-32A/B Aerial Banner Tow Target. TDU-32A/B aerial banner tow targets are rectangular in shape and provide an effective, low cost device for air-to-air and surface-to-air gunnery training. The TDU-32A/B fabric is 90 percent radar reflective. The targets are launched from the runway in accordance with standard snatch or drag takeoff procedures. The targets are towed approximately 1,800 feet behind the aircraft. Target recovery is accomplished by dropping the target in a recovery area following the mission.

5.1.7 Developmental Acquisition Programs.

5.1.7.1 Multi-Stage Supersonic Target (MSST): GQM-173 MSST program is Acquistion Category (ACAT) IVM, it is a non recoverable target that is shore launched only. The MSST will emulate a two-stage Anti-Ship Cruise Missile (ASCM) that has a bus stage that will tumble and fall into the ocean upon separation and a sprint stage that continues to impact. MSST will have a total range of 105 nautical miles and a minimum cruise altitude of 50 feet. The MSST is expected to be a Navy unique target that will be used to evaluate Naval Self Defense Systems against Threat-D ASCM. The MSST is both a subsonic and a supersonic target. The bus stage along with dual Rocket Assisted Takeoff (RATO) is used to launch the MSST. Bus stage

cruising speed is 0.6 to 0.8 with a cruise range of 90 nautical miles upon separation the sprint vehicle will have peck speed between mach2.2 and 3.5 and a range of 11 nautical miles. The sprint vehicle will have Global Positioning System (GPS) along with Target Auxiliary/Augmentation System hardware. MSST is currently in the System Development and Design (SD&D) phase with Military Sealift Command (MSC) scheduled for 1st quarter FY13 and Initial Operating Capability (IOC) 2nd quarter FY14.

5.1.8 Target Maintenance Actions.

5.1.8.1 Target systems and equipment maintenance actions peculiar to rocket propelled missile targets shall be documented in accordance with this manual. Aircraft system maintenance actions peculiar to turbojet propelled targets shall be documented in accordance with aircraft documentation procedures as prescribed in COMNAVAIRFORINST 4790.2 series.

5.1.9 Maintenance Philosophy.

5.1.9.1 The maintenance philosophy for targets and equipment is based on the concept which performs required inspections and maintenance at the lowest maintenance level capable of performing the work. In general, scheduled maintenance actions for targets are performed at the Organizational and Intermediate levels by designated target maintenance activities as identified in Chapters 5.2 and 5.3 of this volume. This will assure that all targets are maintained at the highest level of readiness, safety, and reliability with the optimum use of manpower, material, and fiscal resources. Scheduled component replacement and scheduled component overhaul are not authorized to be performed except as approved by COMNAVAIRSYSCOM.

5.1.9.2 All maintenance will be performed in accordance with the approved maintenance plan, Maintenance Instruction Manuals (MIMs), and Maintenance Requirement Cards (MRCs) developed for each unique application of the target system or equipment. Maintenance will be documented on OPNAV 4790/60 in accordance with COMNAVAIRFORINST 4790.2 series.

5.1.9.3 Hazardous Materials Control and Management Program. All consumable hazardous materials used during the maintenance of targets will be minimized and controlled through NAVAIR 01-1A-75 (Airborne Weapons Associated Equipment, Consumable Material Applications and Hazardous Material Authorized Use List). Only materials in the NAVAIR 01-1A-75 “authorized use list” will be utilized for target systems maintenance.

5.1.10 Target Maintenance Documentation.

5.1.10.1 Source documents are the VIDS/MAF OPNAVINST 4790/60. Other documents required to properly complete the source documents include appropriate Work Unit Code (WUC) manuals, MRCs, local maintenance instructions, and appropriate technical manuals. The VIDS/MAF will be used to document the following types of target maintenance actions:

a. The look phase of post-launch rehabilitation inspections (target calendar depth), acceptance/initial buildup, special, conditional, and corrosion inspections as required.

b. Fix in place actions discovered during inspection.

c. On equipment work not involving removal of defective or suspected defective repairable components.

d. Removal of components for check/test/service actions.

e. Removal and replacement actions for cannibalization.

f. Maintenance actions and man hours of an assisting work center in support of a primary work center.

g. Repairable item processing through an Intermediate Maintenance Activity (IMA).

h. Troubleshooting man hours.

i. Removal or installation of configuration kits for target re-configuration.

j. Incorporation of Technical Directives (TDs) and associated maintenance actions.

k. Removal or replacement of repairable components.

l. Recording the ordering and issuing of repairable components, subassemblies, and parts.

m. Accumulated man hours on deferred work closed out due to an inventory loss (for any reason) of a target.

n. Recording an inventory status change.

o. Preservation and depreservation of targets.

5.1.11 Target and Engine Logbooks. Logbooks are maintained for each target and are the administrative means of providing managers with target age, status, operational history, modification, configuration, and transfer and receiving data. Refer to COMNAVAIRFORINST 4790.2 series. There are two types of configuration changes that will be documented in the target logbook.

a. Permanent configuration changes TD to the target will be documented on a VIDS/MAF and be permanently documented in the target logbook.

b. Mission configuration changes (Local Engineering Change (LEC)) will be documented on a VIDS/MAF and be permanently documented in the target logbook. When the LEC is removed a new entry will be made denoting removal of LEC. This will allow a historical record of LECs that have been installed and removed in the target.

CHAPTER 5.2

Organizational Level Maintenance

Table of Contents

Paragraph	Subject	Page
5.2.1	General	5-2-1
5.2.2	Organizational Level (O-Level) Maintenance Responsibilities	5-2-1

List of Illustrations

Figure	Title	Page
5-2-1	Organizational Level Maintenance Responsibilities for Target Systems	5-2-2

CHAPTER 5.2

Organizational Level Maintenance

5.2.1 General. This chapter describes the Organizational level (O-level) target maintenance actions performed by designated activities as listed in Chapter 5.1, Figure 5-1-2. O-level maintenance is performed by maintenance personnel assigned to target maintenance activities.

5.2.2 Organizational Level (O-Level) Maintenance Responsibilities.

5.2.2.1 Maintenance actions are tailored within the constraints of the O-level's manpower and maintenance capabilities to ensure that assigned target systems and equipment are properly maintained. It is intended that each maintenance task be performed at the level of maintenance which will ensure optimum economical use of material, manpower, and fiscal resources. When maintenance is beyond the capability of the custodian, it will be accomplished by the activity or department more capable of accomplishing the specific maintenance action. To determine the extent to which a repair task can be undertaken, the maintenance activity must consult the appropriate Maintenance Instruction Manual (MIM), operating or service instruction, or technical directives that pertain to each item of equipment. O-level maintenance actions performed on target systems and equipment include scheduled and unscheduled maintenance, time-phased and event-phased inspections, cleaning, minor corrosion control, and servicing. Scheduled and unscheduled maintenance actions are defined below:

a. Scheduled Maintenance Requirements. Scheduled maintenance is performed utilizing Maintenance Requirement Cards (MRCs). MRCs are generated from the applicable MIM and are provided to facilitate a maintenance program for each target system or equipment. MRCs identify the maintenance tasks required to maintain an equipment in an effective operating condition and are arranged sequentially by work area and system. Scheduled maintenance requirements ensure timely discovery and correction of defects and consist of specific inspections contained in the applicable authorized MRCs. Reporting custodians may increase the depth and frequency of any scheduled inspection, require additional inspections whenever excessive time has elapsed between inspections, or when environmental or operational conditions are considered to have impaired the material reliability or integrity of the equipment. Inspections performed to a greater depth or at an increased frequency are logged, if required, as the type which would normally be performed and do not alter the schedule of the programmed inspections.

b. Unscheduled Maintenance Requirements. Maintenance required to correct deficiencies found during operations or scheduled maintenance. Unscheduled maintenance consists of fault isolation (troubleshooting), repair, replacement, and test.

5.2.2.2 Figure 5-2-1 assigns the Organizational Level Maintenance Responsibilities for Target Systems that are performed on the targets listed in Chapter 5.1 of this volume. These assigned maintenance actions are described generally in Paragraphs 5.2.2.2.1 through 5.2.2.2.19. All maintenance actions are to be performed in accordance with the applicable authorized maintenance plan, technical manuals, loading manuals, checklists, and MRCs which have been developed for each target system and launch platform.

Target Type	Prelaunch Inspection	Post Launch Inspection	Conditional Inspection	Acceptance Inspection/ Initial Buildup	Transfer Inspection	Phased Inspection	Calendar Inspection	Rehabili-tation Inspection	Corrosion Control/ Preser-vation	Bench Check/Test
BQM-34	X	X	X	X	X			X	X	X
BQM-74	X	X	X	X	X			X	X	X
AQM-37	X		X	X	X				X	X
QLT-1C	X	X	X	X	X			X	X	X
TDU-32A/B	X	X	X	X	X			X	X	
GQM-163A	X			X						

Figure 5-2-1. Organizational Level Maintenance Responsibilities for Target Systems

Target Type	Component Installation/ Removal	Stray/No Voltage Checks	Release and Control Checks	Target Arming	Target Dearming	Technical Directives	Local Engineering Changes	Deficiency Reporting	Record Keeping/ Reporting
BQM-34	X	X	X	X	X	X	X	X	X
BQM-74	X	X	X	X	X	X	X	X	X
AQM-37	X	X	X	X	X	X	X	X	X
QLT-1C	X					X	X	X	X
TDU-32A/B	X	X				X	X	X	X
GQM-163A	X			X	X			X	X

Figure 5-2-1. Organizational Level Maintenance Responsibilities for Target Systems - contd.

5.2.2.2.1 Prelaunch Inspection. O-level maintenance personnel perform a prelaunch inspection prior to each launch to ensure the integrity of the equipment for operation and to determine the need for servicing. These inspections verify through visual or functional inspection that a target is properly serviced and ready-for-use. All prelaunch inspections are conducted in accordance with the applicable authorized MRCs.

5.2.2.2.2 Post launch Inspections. O-level maintenance personnel perform a post launch inspection and mandatory salt water decontamination after each target recovery. All post launch inspections are conducted in accordance with the applicable authorized MRCs to detect damage or material degradation which may have occurred during the launch and to determine the need for servicing and required maintenance and testing necessary to return the target to an operationally ready condition.

5.2.2.2.3 Conditional Inspection. A conditional inspection is an unscheduled inspection required as a result of a specific over-limit condition. Conditional inspections are performed by organizational maintenance personnel and include tests and inspections to determine the condition of the target after handling incidents, droppage, aborted launches, or hot starts. All conditional inspections are conducted in accordance with the applicable authorized MRCs or MIM.

5.2.2.2.4 Acceptance and Initial Buildup Inspections. Acceptance inspections consist of those inspections performed when a reporting custodian accepts a newly assigned target. The inspection includes an inventory of all equipment listed in the target inventory record, configuration verification, testing and servicing requirements, and initial buildup necessary to place the target in an operational status. Activities may elect to increase the depth of inspections if the equipment condition indicates that such action is warranted. All acceptance and initial buildup inspections are conducted in accordance with the applicable authorized MRCs. Items which are under manufacturer's warranty may be inspected only to the extent allowed by the warranty provisions as specified in the applicable technical publications or other appropriate directives.

5.2.2.2.5 Transfer Inspections. Transfer inspections are conducted in accordance with the applicable authorized MRCs and are basically the same as acceptance inspections, except that they are conducted by the reporting custodian who is transferring the target. Transfer inspections are performed by O-level maintenance personnel and include configuration verification and an inventory of all records and components that make up the target inventory record. Some targets also require disassembly and crating as part of the transfer inspection. Activities may elect to increase the depth of any transfer inspection if the equipment condition indicates that such action is warranted. The transferring activity is responsible for ensuring that all logbooks, records, and forms are updated, completed, and forwarded to the activity that is accepting the target.

5.2.2.2.6 Phased Inspections. Phased inspections are comprised of a series of related inspections performed by O-level maintenance personnel at specific intervals. The inspections are the result of dividing the maintenance requirements into small packages containing approximately the same workload. All phased inspections are conducted in accordance with the applicable authorized MRCs.

5.2.2.2.7 Calendar Inspections. O-level maintenance personnel conduct calendar inspections to check for material degradation which may have occurred during the preceding calendar interval. It provides an opportunity to perform essential preventive maintenance to a greater depth than during any other inspection. All calendar inspections are conducted in accordance with the applicable authorized MRCs.

5.2.2.2.8 Rehabilitation Inspections. Target rehabilitation inspections are post launch inspections that are considered to be at calendar depth. This inspection is conducted by O-level maintenance personnel to determine any degradation or damage that may have occurred during a mission and to perform necessary rehabilitation, including testing and servicing, to return the target to an operational status. Rehabilitation includes disassembly, corrosion control, visual inspection, repair of operational and retrieval damage, correction of deficiencies, bench testing of components, reassembly of the target, and complete system testing. All rehabilitation inspections are conducted in accordance with the applicable authorized MRCs.

5.2.2.2.9 Corrosion Control and Preservation. O-level maintenance personnel perform routine corrosion control inspections on targets in the activity's custody. Minor corrosion discovered during inspections can be removed using preventive maintenance procedures. The procedures normally consist of cleaning, light sanding of surface corrosion, treating, priming, and touchup painting. Corrosion control is mandatory and shall be performed on a scheduled basis as required to maintain the protective envelope on the target and not merely for cosmetic purposes. All targets corrosion control procedures will be performed in accordance with NAVAIR 01-1A-75 for all targets and for target peculiar support and avionics equipment; NAVAIR 01-1A-509, Aircraft Cleaning and Corrosion Control for Organizational and Intermediate Level Maintenance for full size converted tactical aircraft; NAVAIR 17-1-125, Support Equipment Cleaning, Corrosion Control Manual for common support equipment; NAVAIR 16-1-540, Avionics Cleaning Corrosion Prevention/Control for common avionic test and measurement equipment; and NAVAIR 15-01-500, Preservation of Naval Aircraft.

5.2.2.2.10 Bench Check and Test. Bench test is the subjection of target engines, accessories, and equipment to prescribed conditions and specifications with the use of shop test equipment to ensure proper functioning in accordance with predetermined requirements. A bench check consists of a physical inspection or functional test of an item removed due to an alleged malfunction. Through the bench check, O-level maintenance personnel determine if the part or item is serviceable or repairable. The bench check also includes a determination of the maintenance, repair, or possible overhaul required to return the target to serviceable status. All bench checks and tests are performed in accordance with the applicable authorized MIM.

5.2.2.2.11 Component Installation and Removal. O-level maintenance personnel are responsible for performing corrective maintenance to return repairable items to service. Such maintenance is normally accomplished on targets, aerial tow reeling machines, launchers, and target control sets. It consists of replacing defective parts, assemblies, circuit cards, electrical and electronic parts and the repair and testing of material and components in accordance with the applicable authorized MIM.

5.2.2.2.12 Stray/No Voltage Checks. Stray/no voltage checks must be performed prior to installing any explosive device in targets or aircraft launching equipment. Verification is accomplished by using the applicable authorized airborne weapons and stores loading manual. Any noted deficiencies must be corrected and a complete recheck performed before installing explosive devices.

5.2.2.2.13 Release and Control System Checks. O-level Integrated Weapons Team (IWT) members perform release and control checks to functionally test aircraft electrical and mechanical target or control subsystem. Checks must be performed daily prior to target and stores loading, after reconfiguration of the target and aircraft, any malfunction in the release and/or control system, and prior

to launch. Checks will be performed on turnaround if time and operational commitments permit; however, target launchers must be dearmed and safety pins installed prior to performing release and control system checks. Procedures for performing release and control system checks are contained in the applicable authorized airborne weapons and stores loading manual for each target and aircraft.

5.2.2.2.14 Target Arming. Arming procedures performed prior to launch transform a target or launcher from a safe condition to the armed condition. O-level maintenance personnel perform target arming in authorized arming areas. During arming operations, personnel remove safety pins, position safe and arm levers to the arm position, perform stray/no voltage tests, and arm systems. Procedures are issued by the applicable airborne weapons and stores loading manual for each target and aircraft.

5.2.2.2.15 Target Dearming. Post-operational dearming procedures transform a target or launcher from the armed condition to a safe condition. Dearming procedures are performed prior to download and during turnaround evolutions. O-level maintenance personnel perform dearming procedures in an authorized dearming area in accordance with the applicable airborne weapons and stores loading manual for each target and aircraft.

5.2.2.2.16 Technical Directives (TDs). TDs are issued by the Commander, Naval Air Systems Command (COMNAVAIRSYSCOM) to provide technical information necessary to properly and systematically inspect or alter the configuration of target systems or equipment subsequent to establishment of each respective baseline configuration. TDs include all types of changes and bulletins and consist of information that cannot be disseminated satisfactorily by revision to technical manuals. O-level maintenance personnel are responsible for assuring that modification or one-time inspection of equipment in the activity's custody is accomplished when TDs are issued. Refer to Volume I, Section 5.

5.2.2.2.17 Local Engineering Changes. In accordance with the DOD 5000 series instruction, the Aerial Target Systems Program Manager has cognizance over all target configuration issues. Local Engineering Changes (LECs) are developed when aerial target or decoy baseline configurations are temporarily changed to meet unique local Naval Air Warfare Center Weapons Division (NAVAIRWARCENWPNDIV) or off-site user requirements. LECs are not required when a target is to be flown for Test and Evaluation (T&E) of the target system and when the modification was designed, fabricated, and integrated by the target manufacturer. LECs are processed in the same manner as Class I Engineering Change Proposals by the NAVAIRWARCENWPNDIV Threat/Target Systems Department Targets Change Review Board (TCRB) and are approved by the NAVAIRWARCENWPNDIV TCRB Chairperson. Instructions for LEC preparation are contained in a NAVAIRWARCENWPNDIV maintained document detailing the procedures for developing LECs. This document will be approved by the Aerial Target Systems Program Manager by written endorsement. Although LECs are developed to temporarily change an aerial target or decoy baseline configuration, they may be used at various operational sites or for more than one operation if it is deemed that a permanent change to the baseline configuration is not required. The authority to export approved LECs to activities outside NAVAIRWARCENWPNDIV resides with the NAVAIRWARCENWPNDIV TCRB.

5.2.2.2.18 Deficiency Reports. Deficiency reports are contained in COMNAVAIRFORINST 4790 series and Volume I, Chapter 4.6 of this manual at the Organizational level when a deficiency is discovered during the performance of any of the assigned O-level maintenance actions. The Product

Quality Deficiency Report (PQDR) program provides target activities with a method for reporting deficiencies in new or newly reworked targets or target components which may be attributable to nonconformance of contractual or specification requirements or substandard workmanship. Targets and/or target components under warranty are considered to be new material for PQDR purposes. In the event that a deficiency is discovered during the processing of a new or newly reworked target or component that is under warranty, and that deficiency is not a result of maintenance handling or processing, the item shall be considered to be in breach of warranty of the contract and is therefore subject to the provisions of the warranty. Warranty claim actions shall be handled as follows:

a. A PQDR form (SF 368) will be used to process warranty claim actions. The SF 368 will be clearly marked "Warranty Claim Action" and will include the following (in addition to information required in Volume I, Chapter 4.6):

(1) Date of failure (Block 4).

(2) Item serial number (Block 9).

(3) Production contract number (Block 10).

(4) Warranty expiration date (Block 22).

(5) Detailed circumstances leading to discovery of failure (Block 22).

(6) When in doubt as to whether the item is still under warranty (new or newly reworked), submit the completed PQDR checking "Unknown" in block 19a of the SF 368, and forward to the Screening Point. The Screening Point will check for validity and completeness, and continue to process the document as a valid PQDR and Engineering Investigation (EI), etc.

b. In addition to normal distribution, a copy of the completed PQDR and logbook/section will be placed in the container with the failed item and the item will be returned to the vendor for repair under the warranty provisions of the contract. A copy of the PQDR will be sent to the Assistant Program Manager, Logistics (APML) responsible for the item. Deficiency reports will be prepared and submitted by target activities in accordance with Naval Aviation Maintenance Deficiency Reporting Program (NAMDRP) procedures. Target systems and equipment deficiency reports peculiar to missile targets shall be documented in accordance with this manual.

5.2.2.2.19 Target Reporting. The individual target performance report documents target performance. These reports shall be completed electronically in an automated web accessible database for Navy wide use. The Targets reporting system is a secured website (https://awis.navair.navy.mil) and requires a username and password which can be obtained by accessing the All Weapons Information System (AWIS) website. All target operating activities are required to report on target performance whenever:

1. An attempt to launch a target is made.

2. A previously submitted target performance report requires correction or deletion. Reports are to be completed immediately after the operation and submitted into the database within 24 hours if the target is expended and 48 hours if the target was not expended. All target performance reports are now part of the AWIS database and can be accessed electronically at the above website.

a. Target Expenditure Reporting. Current expenditure/allocation information will be available as part of the target site on the AWIS database system at https://awis.navair.navy.mil. The expenditure database will be updated automatically based on the input of the target performance report by the operating activity. Target operating activities are still required to transmit a message report within 24 hours of a target loss, listing target, serial number, calendar date of expenditure, activity charged (Commander, Naval Air Systems Command (COMNAVAIRSYSCOM)/Subclaimant/Foreign Military Sales (FMS)), weapon system utilized/FMS case number. These messages will be addressed to NAVAIRWARCENWPNDIV. All aerial towed target (TDU-32) data may be input weekly. Real time reports are now available on the website. An automated process will download and save end of month, quarterly, and yearly reports.

b. Inventory and Readiness Reporting. Target inventory/readiness report will now include only three categories:

(1) Mission Capable.

(2) Non-Mission Capable Supply.

(3) Non-Mission Capable Maintenance.

These are defined as:

(1) Mission Capable Includes:

(a) Targets ready for flight.

(b) The basic target configuration is ready to be rendered capable for flight and recovery (e.g., includes airframe, ordnance, consumables, etc).

(c) A target that is new in crate and that has all necessary equipment in inventory, on-site, to render capable for flight and recovery.

(2) Non-Mission Capable Supply. The target is not operationally ready because of supply (e.g., item is not on-site).

(3) Non-Mission Capable Maintenance (NMCM). The target system is not operationally ready because a maintenance action required.

(a) Start NMCM when a condition is discovered.

(b) Stop NMCM when maintenance is complete, or interrupted by supply shortage.

(c) Start NMCM when the component is provided from supply and maintenance resumes.

(d) Includes grounded targets with outstanding airframe EIs or PQDRs.

c. All Aerial Target and Target Auxiliary/Augmentation System (TA/AS) inventory and readiness changes shall be reported as follows:

(1) All non-deployed target operating activities with internet access shall report changes in the inventory at the close of business each day and changes in readiness condition at the end of each week.

(2) All deployed activities with internet access shall report changes in the inventory and readiness condition at the end of each week.

(3) Any target operating activity without internet access shall forward their changes in the inventory and readiness condition at the end of each week to the database manager at NAVAIR-WARCENWPNDIV.

d. Target Inventory Reports. All government and contractors activities assigned custody of serialized aerial and surface targets, including tow reels, launchers, and non-serialized aerial tow targets and aerial banner tow targets shall provide their inventory and condition status into the targets database at the https://awis.navair.navy.mil website whenever:

(1) A target is received from another activity.

(2) A target is transferred and accepted by another activity.

(3) A target is expended.

(4) The readiness of a target is changed.

(5) A target previously reported as expended is reinstated into the inventory.

(6) Real time reports are now available on the website.

(7) An automated process will download and save end of the month, quarterly, and yearly reports.

e. TA/AS and Consumable/Kit Inventory Reports. All government and contractor activities in possession of and/or assigned custody of TA/AS items and installation kits for aerial and surface targets shall provide their inventory and condition status into targets database at the https://awis.navair.navy.mil website whenever:

(1) A TA/AS item or installation kit is received from another activity.

(2) A TA/AS item or installation kit is transferred and accepted by another activity.

(3) TA/AS item or installation kit is expended.

(4) The readiness of a TA/AS item or installation kit is changed.

(5) A TA/AS item or installation kit previously reported as expended is reinstated into the inventory. Real time reports are now available on the website. An automated process will download and save end of month, quarterly, and yearly reports.

f. Other Target Inventory Reporting. All government and contractor activities assigned custody of aerial and surface targets shall report their target flight consumables and component inventory status into the targets database at the https://awis.navair.navy.mil website whenever:

(1) A flight consumable or target component is received from another activity.

(2) A flight consumable or target component is transferred and accepted by another activity.

(3) A flight consumable or target component is expended.

(4) The readiness of a flight consumable or target component is changed.

(5) A flight consumable or target component previously reported as expended is reinstated into the inventory.

CHAPTER 5.3

Intermediate Level Maintenance

Table of Contents

Paragraph	Subject	Page
5.3.1	General	5-3-1
5.3.2	Intermediate Level (I-Level) Maintenance Responsibilities	5-3-1

List of Illustrations

Figure	Title	Page
5-3-1	Intermediate Level Maintenance Responsibilities for Target Systems	5-3-2

CHAPTER 5.3

Intermediate Level Maintenance

5.3.1 General. This chapter describes the Intermediate level (I-level) target maintenance actions performed by designated activities as listed in Chapter 5.1, Figure 5-1-2. I-level maintenance is performed by maintenance personnel assigned to target maintenance activities.

5.3.2 Intermediate Level (I-Level) Maintenance Responsibilities.

5.3.2.1 I-level maintenance activities perform higher level maintenance actions on target systems and equipment. The primary objective of I-level maintenance is to maintain and issue operable target systems and equipment. It is intended that each maintenance task be performed at the level of maintenance which will ensure optimum use of material, manpower, and fiscal resources. However, there may be occasions when Organizational and Intermediate maintenance actions will overlap. When maintenance is beyond the capability of the custodian, it will be accomplished by the department more capable of accomplishing the specific maintenance action. To determine the extent to which a repair task can be undertaken, the maintenance activity must consult the appropriate Maintenance Instruction Manual (MIM), operating or service instruction, or technical directive that pertain to each item of equipment. I-level maintenance actions for target systems and equipment are associated with aircraft operations and include scheduled and unscheduled maintenance, time-phased and event-phased inspections, cleaning, minor corrosion control, and servicing. Scheduled and unscheduled maintenance actions are defined below:

a. Scheduled Maintenance Requirements. Scheduled maintenance is performed utilizing Maintenance Requirements Cards (MRCs). MRCs are generated from the applicable MIM and are provided to facilitate a phased maintenance program for each target system or equipment. MRCs identify the tasks required to maintain an item in an effective operating condition and are arranged sequentially by work area and system. Scheduled maintenance ensures timely discovery and correction of defects and consist of specific inspections contained in the applicable MRCs. Reporting custodians may increase the depth and frequency of any scheduled inspection, require additional inspections whenever excessive time has elapsed between inspections, or when environmental or operational conditions are considered to have impaired the material reliability or integrity of the equipment. Inspections performed to a greater depth or at an increased frequency are logged, if required, as the type which would normally be performed and do not alter the schedule of the programmed inspections.

b. Unscheduled Maintenance Requirements. The maintenance required to correct deficiencies found during operations or scheduled maintenance. Unscheduled maintenance consists of fault isolation (troubleshooting), repair, replacement, test, and calibration.

5.3.2.2 Figure 5-3-1 assigns the Intermediate Level Maintenance Responsibilities for Target Systems that are performed on the targets listed in Chapter 5.1. These assigned maintenance actions are described generally in Paragraphs 5.3.2.2.1 through 5.3.2.2.9. All maintenance actions are performed in accordance with the applicable authorized maintenance plans, technical manuals, loading manuals, checklists, and MRCs which have been developed for each target system and launch platform.

Target Type	Conditional Inspection	Rehabili-tation Inspection	Corrosion Control/ Preserva-tion	Bench Check/ Test	Component Installation/ Removal	Component Repair	Component Overhaul	Deficiency Reporting	Record Keeping/ Reporting
BQM-34	X	X	X	X	X	X	X	X	X
BQM-74	X	X	X	X	X	X		X	X
AQM-37	X		X	X	X			X	X
QLT-1C	X	X	X	X	X		X	X	X
TDU-32A/B	X	X	X		X			X	X

Figure 5-3-1. Intermediate Level Maintenance Responsibilities for Target Systems

5.3.2.2.1 Conditional Inspection. A conditional inspection is an unscheduled inspection required as a result of a specific over-limit condition. Conditional inspections are performed by I-level maintenance personnel and include tests and inspections to determine the condition of the target components after handling incidents, droppage, aborted launches, or hot starts. All conditional inspections are conducted in accordance with the applicable authorized MRCs or MIM.

5.3.2.2.2 Rehabilitation Inspections. Target component rehabilitation inspections are post launch inspections that are considered to be at calendar depth. This inspection is conducted by I-level maintenance personnel to determine any degradation or damage that may have occurred during a mission and to perform necessary rehabilitation, including testing and servicing, to return the target to an operational status. Rehabilitation includes disassembly, decontamination, corrosion control, visual inspection, repair of operational and retrieval damage, correction of deficiencies, bench testing of components, reassembly of the target and complete system testing. All rehabilitation inspections are conducted in accordance with the applicable authorized MRCs.

5.3.2.2.3 Corrosion Control and Preservation. I-level maintenance personnel perform routine corrosion control inspections on targets and Aircraft Armament Equipment (AAE) in the activity's custody. Minor corrosion discovered during inspections can be removed using preventive maintenance procedures. The procedures normally consist of cleaning, light sanding of surface corrosion, treating, priming, and touchup painting. Corrosion control is mandatory and shall be performed on a scheduled basis as required to maintain the protective envelope on the target and not merely for cosmetic purposes. All other corrosion control procedures will be performed in accordance with NAVAIR 01-1A-75 for all targets and target peculiar support and avionics equipment; NAVAIR 01-1A-509 (Aircraft Cleaning and Corrosion Control for Organizational and Intermediate Level Maintenance), NAVAIR 15-01-500 (Preservation of Naval Aircraft), and NAVAIR 17-1-125 (Support Equipment Cleaning, Corrosion Control Manual). Cleaning of avionics test and measurement equipment shall be in accordance with NAVAIR 16-1-540 (Avionics Cleaning Corrosion Prevention/Control).

5.3.2.2.4 Bench Check and Test. Bench test is the subjection of target engines, accessories, equipment, and equipage to prescribed conditions and specifications with the use of shop test equipment to ensure proper functioning in accordance with predetermined requirements. A bench check consists of a physical inspection or functional test of an item removed due to an alleged malfunction. Through the bench check, I-level maintenance personnel determine if the part or item is serviceable or repairable. The bench check also includes a determination of the maintenance, repair, or possible overhaul required to return the target to serviceable status. All bench checks and tests are performed in accordance with the applicable authorized MIM.

5.3.2.2.5 Component Installation and Removal. I-level maintenance personnel are responsible for performing corrective maintenance to return repairable items to service. This maintenance is normally accomplished on targets, aerial tow reeling machines and launchers, and target control sets. This consists of replacing defective parts, assemblies, circuit cards, electrical or electronic parts and the repair and testing of material and components in accordance with the applicable authorized MIM.

5.3.2.2.6 Component Repair. I-level maintenance personnel perform I-level maintenance and repair of target system components as specified in the applicable authorized target MIM by ensuring the necessary maintenance actions such as preparation, fault correction, disassembly, inspection,

replacement of parts, adjustment, reassembly, calibration and tests required to restore items to a serviceable status are complete.

5.3.2.2.7 Component Overhaul. Component overhaul is performed as a means of inspecting all the operating components of the end article. I-level maintenance personnel first disassemble the subject component, then conduct repair, replacement, or servicing as necessary, followed by reassembly and bench check and test. All overhaul maintenance actions are performed in accordance with the applicable authorized technical manual.

5.3.2.2.8 Deficiency Reports. Deficiency reports are initiated at the I-level when a deficiency is discovered during the performance of any of the assigned I-level maintenance actions. Deficiency reporting procedures are contained in Volume I, Chapter 4.6. The Product Quality Deficiency Report (PQDR) program provides target activities with a method for reporting deficiencies in new or newly reworked targets or target components which may be attributable to non-conformance of contractual or specification requirements or substandard workmanship. Targets and/or target components under warranty are considered to be new material for PQDR purposes. In the event that a deficiency is discovered during the processing of a newly reworked target or component that is under warranty, and that deficiency is not a result of maintenance handling or processing, the item shall be considered to be in breach of warranty provisions of the contract and is therefore subject to the provisions of the warranty. Warranty claim actions shall be handled as follows:

a. A PQDR form (SF 368) will be used to process warranty claim actions. The SF 368 will be clearly marked "Warranty Claim Action" and will include the following (in addition to information required in Volume I, Chapter 4.6):

(1) Date of failure (Block 4).

(2) Item serial number (Block 9).

(3) Production contract number (Block 10).

(4) Warranty expiration date (Block 22).

(5) Detailed circumstances leading to discovery of failure (Block 22).

(6) When in doubt as to whether the item is still under warranty (new or newly reworked), submit the completed PQDR checking "Unknown" in block 19a of the SF 368, and forward to the Screening Point. The Screening Point will check for validity and completeness, and continue to process the document as a valid PQDR, and Engineering Investigation (EI), etc.

b. In addition to normal distribution, a copy of the completed PQDR and logbook/section will be placed in the container with the failed item and the item will be returned to the vendor for repair under the warranty provisions of the contract. A copy of the PQDR will be sent to the Assistant Program Manager, Logistics (APML) responsible for the item. Deficiency reports will be prepared and submitted by target activities in accordance with Naval Aviation Maintenance Deficiency Reporting Program (NAMDRP) procedures. Target systems and equipment deficiency reports peculiar to missile targets shall be documented in accordance with this manual. Aircraft system deficiency reports peculiar to aircraft target drones shall be documented in accordance with deficiency reporting procedures as prescribed in COMNAVAIRFORINST 4790.2 series.

5.3.2.2.9 Record Keeping and Reporting. I-level maintenance activities are responsible for maintaining target logbooks, engine logbooks, target deficiency books, target performance reports, the Visual Information Display System/Maintenance Action Form (VIDS/MAF), and the work request customer service form as described below for target systems in their custody.

a. The Engine Logbook. The engine logbook must retain manufacturer's engine test parameters in the manila envelope located in the back of the logbook and will contain the following records:

(1) Aeronautical Equipment Service Record (AESR) (OPNAV 4790/29).

(2) Equipment Operating Record (OPNAV 4790/31A).

(3) Inspection Record (OPNAV 4790/22A).

(4) Record of Rework (OPNAV 4790/23A).

(5) Technical Directives (OPNAV 4790/24A).

(6) Miscellaneous/History (OPNAV 4790/25A). Entries shall be made to reflect historical data for which there is no special provision.

(7) Preservation/Depreservation Record (OPNAV 4790/136A).

b. Target Performance Report. The individual target performance report documents target performance. These reports shall now be completed electronically in an automated web accessible database for Navy wide use. The Targets reporting system is a secured website (https://awis.navair.navy.mil) and requires a username and password which can be obtained by accessing the All Weapons Information System (AWIS) website. All target operating activities are required to report on target performance whenever:

(1) A powered target is operated.

(2) A previously submitted target performance report requires correction or deletion. Reports are to be completed immediately after the operation and submitted into the database within 24 hours if the target is expended and 48 hours if the target was not expended. All target performance reports are now part of the AWIS database and can be accessed electronically at the above website.

c. Target Expenditure Reporting. Current expenditure/allocation information will be available as part of the target site on the AWIS database system at https:// awis.navair.navy.mil. The expenditure database will be updated automatically based on the input of the target performance report by the operating activity. Target operating activities are still required to transmit a message report within 24 hours of a target loss, listing target, serial number, calendar date of expenditure, activity charged (Commander, Naval Air Systems Command (COMNAVAIRSYSCOM)/Subclaimant/Foreign Military Sales (FMS)), weapon system utilized/FMS case number. These messages will be addressed to NAVAIRWARCENWPNDIV. All aerial towed targets (TDU-32) data may be inputted weekly. Real time reports are now available on the website. An automated process will download and save end of month, quarterly, and yearly reports.

d. Inventory and Readiness Reporting. Target inventory/readiness report will now include only three categories:

(1) Mission Capable.

(2) Non-Mission Capable Supply.

(3) Non-Mission Capable Maintenance.

These are defined as:

(1) Mission Capable Includes:

(a) Targets ready for flight.

(b) The basic target configuration is ready to be rendered capable for flight and recovery (e.g., includes airframe, ordnance, consumables, etc).

(c) A target that is new in crate and that has all necessary equipment in inventory, on-site, to render capable for flight and recovery.

(2) Non-Mission Capable Supply. The target is not operationally ready because of awaiting parts from supply (e.g., item is not on-site).

(3) Non-Mission Capable Maintenance (NMCM). The target system is not operationally ready because a maintenance action is required.

(a) Start NMCM when a condition is discovered.

(b) Stop NMCM when maintenance is complete, or interrupted by supply shortage.

(c) Start NMCM when the component is provided from supply and maintenance resumes.

(d) Includes grounded targets with outstanding airframe EIs or PQDRs.

e. All Aerial Target and Target Auxiliary/Augmentation System (TA/AS) inventory and readiness changes shall be reported as follows:

(1) All non-deployed target operating activities with internet access shall report changes in the inventory at the close of business each day and changes in readiness condition at the end of each week.

(2) All deployed activities with internet access shall report changes in the inventory and readiness condition at the end of each week.

(3) Any target operating activity without internet access shall forward their changes in the inventory and readiness condition at the end of each week to the database manager at Naval Air Warfare Center Weapons Division (NAVAIRWARCENWPNDIV).

f. Target Inventory Reports. All government and contractors activities assigned custody of serialized aerial, surface targets, non-serialized aerial banner tow targets shall provide their inventory and condition status into the targets database at the targets website https://awis.navair.navy.mil for the following events:

(1) Target is received from another activity

(2) Target is transferred to another activity.

(3) Target is expended.

(4) The readiness of a target is changed.

(5) A target previously reported as expended is reinstated into the inventory real time reports are now available on the website.

(6) An automated process will download and save end of the month, quarterly, and yearly reports.

g. TA/AS and Consumable/Kit Inventory Reports. All government and contractor activities in possession of and/or assigned custody of TA/AS items and installation kits for aerial and surface targets shall provide their inventory and condition status into the targets database at https://awis.navair.navy.mil website whenever:

(1) A TA/AS item or installation kit is received from another activity.

(2) A TA/AS item or installation kit is transferred and accepted by another activity.

(3) TA/AS item or installation kit is expended.

(4) The readiness of a TA/AS item or installation kit is changed.

(5) A TA/AS item or installation kit previously reported as expended is reinstated into the inventory. Real time reports are now available on the website. An automated process will download and save end of month, quarterly, and yearly reports.

h. Other Target Inventory Reporting. All government and contractor activities assigned custody of aerial and surface targets shall report their target flight consumables and component inventory status into the targets database at https://awis.navair.navy.mil website whenever:

(1) A flight consumable or target component is received from another activity.

(2) A flight consumable or target component is transferred to another activity.

(3) A flight consumable or target component is expended.

(4) The readiness of a flight consumable or target component is changed.

(5) A flight consumable or target component previously reported as expended is reinstated into the inventory.

i. Visual Information Display System/Maintenance Action Form (OPNAV 4790/60). The VIDS/MAF is used to document, in addition to on equipment maintenance actions, the removal and subsequent processing of a repairable component or item to an I-level maintenance activity. This form is used by supported maintenance and supply activities to request work from the supporting I-level maintenance activity that is beyond the requesting activity's capability and does not involve repair of aeronautical material. I-level maintenance activities performing target systems and equipment maintenance perform inventories of all serialized targets and report gains and losses as they occur in accordance with the Navy planned Maintenance Data System (MDS) using VIDS/MAF. A VIDS/MAF work request is used primarily for, but not limited to:

(1) To request check, test, and service of items removed from a target, aircraft, equipment, or armament weapons support equipment for scheduled maintenance when requested work is beyond the capability of the requesting activity.

(2) To induct items that are not part of a target, aircraft, or support equipment, for example, a pilot's personal equipment, oxygen masks, life preservers, and parachutes, that require check, test, and service.

(3) To induct components from supply for check, test, and service.

(4) To induct components from supply for buildup, such as engine, quick engine change kit, wheel and tire assembly, that are beyond the supply activity's capability.

(5) To induct components or items not having a work unit code or identifiable to a specific type of equipment for check, test, and service or for local manufacture or fabrication.

(6) To request a nondestructive inspection either on-site or at the intermediate maintenance activity, when a technical directive is not involved.

(7) To induct items for ready-for-issue certification prior to reinstallation in aircraft or target.

j. Work Request Customer Service (OPNAV 4790/36A Rev 02-01). This form is used to request work or assistance from a Depot overhaul point that is beyond the requesting activity's maintenance capability. I-level maintenance activities use this form to request assistance from Depot level activities to complete components delayed in process due to lack of facilities for check and test, or for processing not normally required, such as heat treatment, plating, magnaflux, and machine shop.

k. Support Equipment Depot Rework Schedule Request (OPNAV 4790/80). The form is used to request scheduling of end items of support equipment that are beyond the requesting I-level activity's maintenance capability.

CHAPTER 5.4

Depot Level Maintenance

Table of Contents

Paragraph	Subject	Page
5.4.1	General	5-4-1
5.4.2	Assignment of Depot Level (D-Level) Maintenance Responsibilities	5-4-1
5.4.3	Depot Level Maintenance Actions	5-4-1
5.4.4	Depot Level Maintenance Responsibilities	5-4-1
5.4.5	Depot Maintenance Processing	5-4-1
5.4.6	Technical Directives (TDs)	5-4-3

List of Illustrations

Figure	Title	Page
5-4-1	Assignment of Depot Level Target System Maintenance Responsibilities	5-4-2

CHAPTER 5.4

Depot Level Maintenance

5.4.1 General. This chapter discusses the maintenance actions assigned to Depot level (D-level) maintenance activities. D-level activities support the Organizational and Intermediate levels by providing technical assistance in carrying out those functions which are beyond the capability of Organizational level and Intermediate level activities. D-level functions are carried out in industrial establishments or in the field by personnel from such establishments. D-level industrial establishments may be government-owned/operated, government-owned and contractor-operated, or contractor-owned/operated.

5.4.2 Assignment of Depot Level (D-Level) Maintenance Responsibilities. The activities assigned to perform D-level maintenance on target systems and equipment are listed in Figure 5-4-1. In some instances complete targets are returned to D-level maintenance and in others only the failed section is returned.

5.4.3 Depot Level Maintenance Actions. Maintenance actions assigned to the Depot are:

a. All maintenance and modification actions necessary for the rework and repair of the target sections and components under their cognizance.

b. When authorized, Depot level activities manufacture items and component parts otherwise not available when that action is appropriately authorized.

c. Support services functions, including professional engineering, technology, and calibration services, and field teams to support Organizational level and/or Intermediate level maintenance when required and directed.

5.4.4 Depot Level Maintenance Responsibilities.

5.4.4.1 D-level maintenance responsibilities include those actions required to maintain or restore the inherent design service levels of performance, reliability, and material condition; they span complete rebuild through reclamation, refurbishment, overhaul, repair, replacement, adjustment, servicing, and replacement of consumables. They also include inspection, calibration, and testing.

5.4.4.2 D-level maintenance is also responsible for all modification actions required to change or improve design levels of performance, reliability, and material. The term modification, as used in this manual, includes alteration, conversion, engineering change, modernization, etc.

5.4.4.3 Normally, D-level maintenance of each target component will be limited to repairs where the cost of repair does not exceed new procurement costs. This criteria will not be applied to items which are identified as critical, in short supply status, or when recovery is in the best interest of the government.

5.4.5 Depot Maintenance Processing. All Depot maintenance actions are performed in accordance with the applicable instructions and specifications.

Target Type	Northrop Grumman Ryan Aeronautical, San Diego, CA	Northrop Grumman Rancho Bernardo, CA	Williams International, Walled Lake, MI	Orbital Sciences Chandler, AZ	Raytheon Company Andover, KS	Evolving Resources Inc. Camarillo, CA	None
BQM-34	X						
BQM-74		X					
J400 Engine Components			X				
AQM-37					X		
QLT-1C						X	
TDU-32A/B							X
GQM-163A				X			

Figure 5-4-1. Assignment of Depot Level Target System Maintenance Responsibilities

5.4.6 Technical Directives (TDs). D-level maintenance personnel are responsible for assuring that TDs, Airborne Weapon Bulletins (AWBs), and Airborne Weapon Changes (AWCs) are complied with. In addition, they also assist in the development and verification of TDs that ultimately affect them. This assistance includes Engineering Change Proposal (ECP) review, development of the resulting TD and verification prior to implementation of the TD. Refer to Volume I, Section 5.

SECTION 6

Weapons Handling Procedures

Table of Contents

Chapter	Subject	Page
6.1	Introduction	6-1-1
6.2	Conventional Weapons Handling Procedures Ashore	6-2-1
6.3	Conventional Weapons Handling Procedures Afloat (LHA, LHD, and LPD)	6-3-1
6.4	Conventional Weapons Handling Procedures Afloat (AE, AO, and AOE) Combat Logistics Force Ships (Ammunition Ships)	6-4-1
6.5	Conventional Weapons Handling Procedures Afloat (CVN)	6-5-1

CHAPTER 6.1

Introduction

Table of Contents

Paragraph	Subject	Page
6.1.1	General	6-1-1
6.1.2	Definition of Terms	6-1-1
6.1.3	Responsibilities	6-1-1
6.1.4	Weapons Handling and Movement	6-1-2
6.1.5	Explosives Handling Personnel Qualification and Certification (Qual/Cert) Program	6-1-3
6.1.6	Explosive Mishap Investigations and Reporting	6-1-3
6.1.7	Arms, Ammunition, and Explosives Security	6-1-3
6.1.8	Physical Security and Loss Prevention Program	6-1-8
6.1.9	Hazards of Electromagnetic Radiation to Ordnance (HERO) and HERO Emission Control (EMCON)	6-1-8
6.1.10	Adverse Meteorological Disturbances	6-1-10
6.1.11	Explosives Drivers	6-1-10
6.1.12	Explosive Ordnance Disposal	6-1-11
6.1.13	Explosives Safety Waivers/Exemptions	6-1-11
6.1.14	Conventional Weapons Safety Assistance Teams	6-1-12
6.1.15	Static Displays	6-1-12
6.1.16	Working Parties	6-1-12

List of Illustrations

Figure	Title	Page
6-1-1	Aircraft Arming and Safing Signals	6-1-4
6-1-2	Standard Signal Wands	6-1-7

CHAPTER 6.1

Introduction

6.1.1 General.

6.1.1.1 This section provides pertinent information that will promote a standardized, safe, and efficient program for handling weapons at Navy and Marine Corps aviation activities Ashore and Afloat.

6.1.1.2 Numerous regulations and requirements are applicable to any command handling explosives. To avoid repetition in subsequent chapters of this section, items that are general in nature and pertain to all commands will be covered in this chapter. Special guidelines for handling conventional explosives within specific command groups will be addressed in the remaining chapters of this section.

6.1.2 Definition of Terms.

a. Warning: An operating procedure, practice, or condition, etc., which may result in injury or death if not carefully observed or followed.

b. Caution: An operating condition, procedure, practice, etc., which, if not strictly observed, may damage equipment.

c. Note: An operating procedure, practice, condition, etc., which requires emphasis.

d. Shall: Used only when application of a procedure is mandatory.

e. Should: Used only when application of a procedure is recommended.

f. May/Need: Used only when application of a procedure is optional.

g. Will: Used only to indicate futurity, never to indicate any degree of requirement for application of a procedure.

6.1.3 Responsibilities.

6.1.3.1 Commanding Officer (CO). In addition to the duties and responsibilities inherent in the position of CO as set forth in U.S. Navy regulations or as issued by higher authority, the CO is responsible for the safety of his/her command and for the training of assigned personnel. The CO shall ensure that all ordnance handling evolutions at his/her command are conducted safely and in accordance with existing directives.

6.1.3.2 Weapons Officer. The Weapons Officer is responsible to the CO for supervising and directing the proper requisitioning, safe handling, stowage, and issuance of the command's complement of weapons. The Weapons Officer shall ensure that ammunition magazines and lockers are properly maintained and that all personnel tasked to handle explosives are trained in proper and safe handling procedures pertaining to the ordnance items they will handle. The Weapons Officer will also coordinate with assigned Unit Commanders or their representatives in determining the type, quantity, and delivery times for ordnance required in support of the

unit's assigned mission. The Weapons Officer will administer and ensure compliance with the command's ordnance explosive handling qualification and certification program.

6.1.3.3 Safety Officer. The Safety Officer shall be thoroughly familiar with the provisions of this and all other instructions issuing explosive safety regulations. The Safety Officer shall act as staff advisor to the Commanding Officer, department heads, and other personnel in all matters relating to explosive safety. Safety Officers have no authority to waive or alter safety regulations nor shall they permit violation of such regulations by others. The Safety Officer shall act positively to eliminate any hazard existing in operations under his/her jurisdiction.

6.1.3.4 Ordnance Officer. The Ordnance Officer assigned to shore-based ordnance industrial activities is responsible to the Commanding Officer for supervising and directing the maintenance, movement, safety, industrial processing, and inventory control of explosives and weapons material in support of Fleet Commanders, Type Commanders, and other activities responsible for weapons inventory management. In addition, the Ordnance Officer administers and monitors the commands explosive handling qualification and certification program.

6.1.4 Weapons Handling and Movement.

6.1.4.1 Weapons handling evolutions introduce a degree of risk and require careful planning and preparation. The necessity to train for and conduct combat operations requires the acceptance of certain risks which cannot be avoided in the handling of explosive weapons. COs shall continually weigh the requirement to conduct each weapons evolution against the additional risk that is being interjected and accept only those evolutions in which the need clearly outweighs the risk.

6.1.4.2 The presence of explosives outside designated magazines increases the danger of a fire or explosion. The greater the quantities of weapons involved, the greater the risk. To minimize the risk, only that quantity of weapons required to sustain operations shall be exposed.

6.1.4.3 Breakout and movement of ordnance requires preplanning and close coordination between the Weapons Department/NMC and receiving activities. Prior to commencement of explosive ordnance handling evolutions, all personnel concerned shall be thoroughly indoctrinated in the safety precautions applicable to the ordnance being handled. Lack of sufficient indoctrination shall result in an order to cease operations until such indoctrination is accomplished.

6.1.4.4 A qualified and certified Safety Observer (SO) shall be designated and shall be present during all ordnance handling evolutions. This observer has the authority to stop any operation considered unsafe.

6.1.4.5 Except as stated in paragraph 6.1.16, only trained and qualified personnel shall be permitted to take part in evolutions involving explosives. They shall be certified in accordance with OPNAVINST 8020.14/MCO P8020.11.

6.1.4.6 Only authorized equipment shall be used for handling ordnance. All cranes, trucks, slings, strongbacks, etc., shall be inspected for completeness and proper condition prior to each day's use. Each piece of equipment shall be properly marked or tagged showing safe working load and the date of last weight testing. Equipment with expired test dates shall not be used.

6.1.4.7 Weapons arming and dearming shall be conducted in designated arming and dearming areas. When forward firing weapons are involved, and the weapons and stores loading manual

and checklist so require, the area ahead of the weapon shall be cleared and maintained clear until completion of the arming and dearming.

6.1.4.8 Arming and dearming shall be conducted only while the aircraft is at a complete stop and control of that aircraft has been turned over to the arming and dearming supervisor. All arming and dearming signals shall be in accordance with applicable Naval Air Training and Operating Procedures Standardization (NATOPS) manuals and Figure 6-1-1. Signal wands used for night operations shall be marked or taped in accordance with Figure 6-1-2. If a conflict exists between this manual and the applicable NATOPS, the NATOPS manual shall take precedence.

6.1.5 Explosives Handling Personnel Qualification and Certification (Qual/Cert) Program.

6.1.5.1 The ordnance explosives handling personnel qualification and certification program was initiated as a means of standardizing the qualifications of those personnel whose duties require them to participate in any evolution involving explosive material.

6.1.5.2 All personnel in the Naval vessels tasked to handle explosive ordnance shall be thoroughly trained, qualified, and certified in accordance with OPNAVINST 8020.14/MCO P8020.11 prior to engaging in any evolution in which explosives are involved.

6.1.5.3 All personnel, military and civilian, engaged in or tasked to engage in handling explosives shall be qualified in accordance with OPNAVINST 8020.14/MCO P8020.11.

6.1.5.4 Certification of Marine Corps ordnance personnel, prior to embarking aboard amphibious aviation ships, is the responsibility of the Marine squadron Commander. Certification of the ships force Navy and Marine Corps aviation ordnance handling team shall be made by the ship's CO following satisfactory demonstration of all aspects of ordnance handling evolutions during amphibious refresher training exercises. The certification shall be made after the satisfactory results of the Aviation Ordnance safety survey have been reported to the ships CO and prior to authorizing live ordnance evolutions.

6.1.6 Explosive Mishap Investigations and Reporting. There is a high potential for mishaps involving explosives. Accordingly, requirements for reporting explosive mishaps are more stringent than for other kinds of accidents and incidents. All accidents, incidents, or malfunctions involving nonnuclear explosives, explosive ordnance, chemical agents, and ordnance materials shall be reported. Explosive mishap reports are to be submitted in accordance with Volume I, Chapter 4.6.

6.1.7 Arms, Ammunition, and Explosives Security.

6.1.7.1 Emphasis on Arms, Ammunition, and Explosives (AA&E) security has greatly increased in the last few years. Better locks, detection devices, materials, and training have been provided and new improvements are continuing to be developed; however, "the human factor" continues to be the weak link. The most effective single action is conscientious supervision.

6.1.7.2 The Commander, Naval Ordnance Safety and Security Activity, Indian Head MD manages the overall AA&E security program. OPNAVINST 5530.13 Department of the Navy Physical Security Instruction for Conventional AA&E (Navy Security Instruction for Conventional AA&E) provides guidance for implementation and operation of an individual command's AA&E security program.

Arming Signals			
Signal		Meaning	Response
Day	Night		
1. Arming Supervisor: Hands overhead with finger tips touching.	RED banded wands overhead with tips touching.	Pilot/Copilot/NFO: Check all armament switches OFF or SAFE.	Pilot/Copilot/NFO: Raise both hands into view of arming supervision after or checking switch positions. (Hands remain in view during check and hookup.)
2. Arming Supervisor: One hand overhead; point to arming crewmembers with other hand. 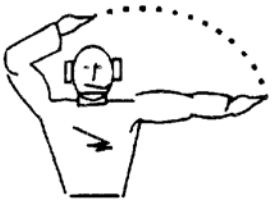	Same as day but with RED banded wands.	Arming Crew: Perform stray voltage checks.	Arming Crew: Give "thumbs up" to arming supervisor if no stray voltage exits. "Thumbs down" indicates stray voltage problems. Night: Vertical sweep with flashlight indicates no stray voltage. Horizontal sweep indicates stray voltage.
3. Arming Supervisor: Raise fist, extended upward to meet horizontal palm of other hand.	Form a tee with RED banded wands.	Arming Crew: Arms weapons (as applicable).	Arming Crew: Give arming supervisor "thumbs up" when arming completed and clear immediate area. "Thumbs down" if malfunction exists. Night: Vertical sweep with flashlight indicates arming completed. Horizontal sweep indicates malfunction.
4. Arming Supervisor: Raise both hands with fingers pointing to sound attenuators.	Same as day. Tips of RED band wands touching sound attenuators.	Arming Crew: Perform missile check.	Pilot: Give arming supervisor "thumbs up" if tone is heard. "Thumbs down" if no tone. Night: Vertical sweep with flashlight indicating good tone or horizontal sweep with flashlight indicating no tone.

NOTE:
1. The applicable signal given by the arming/safing supervisor should be held in the position shown until that particular evolution (e.g., arming, safing, stray voltage) is completed.

Figure 6-1-1. Aircraft Arming and Safing Signals

Arming Signals			
Signal		Meaning	Response
Day	Night		
5. Arming Supervisor: Insert finger of one hand into clenched fist of other hand and give extracting motion.	Touch tips of RED banded wands in front of body. Then move one wand laterally in a sweeping motion.	Arming Crew: Remove bomb rack/ pylon safety pins.	Arming Crew: Shows pins to arming supervisor and clear immediate area. Night: Same as signal 3 above.
6. Arming Supervisor: Give Pilot (a) Thumbs up. (b) Thumbs down.	(a) Vertical sweep with RED banded wand. (b) Horizontal sweep with RED banded wand.	Pilot: (a) Aircraft armed and all personnel and equipment clear. (b) Aircraft down for weapons.	Pilot: (a) Acknowledge with similar signal. (b) Acknowledge with similar signal.
7. Arming Supervisor/ Observer: Crossed arms overhead, fists clenched. 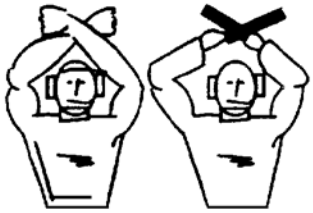	Crossed standard RED wands held overhead.	Suspend all arming/ safety operations on aircraft.	Suspend arming and await further instructions.

Figure 6-1-1. Aircraft Arming and Safing Signals - contd.

Safing Signals			
Signal		Meaning	Response
Day	Night		
1. Safing Supervisor: Hands overhead with finger tips touching.	RED banded wands overhead with tip touching.	Pilot/Copilot/NFO: Check all armament switches OFF or SAFE.	Pilot/Copilot/NFO: Raise both hands into view of safing supervisor after checking switch position (Hands remain in view during safing.)
2. Safing Supervisor: One hand overhead, point to safing crewmember with other hand.	Same as day but with RED banded wands.	Safing Crew: Safe weapons (as applicable).	Safing Crew: After safing, give safing supervisor "thumbs up" and move clear of aircraft. Night: Vertical sweep with flashlight when safing is complete.
3. Safing Supervisor/ Observer: Crossed arms overhead, fists clenched. 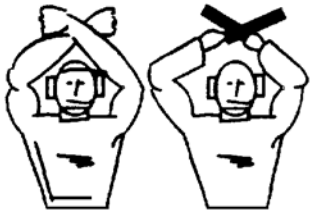	Crossed standard RED wands held overhead.	Suspend all arming/safety operations on aircraft.	Suspended safing and await further instructions.
4. Safing Supervisor: Give pilot "thumbs up."	Vertical sweep with RED banded wand.	Pilot: Aircraft is safed and crew and equipment are clear.	Pilot: Acknowledge with similar signal.

Figure 6-1-1. Aircraft Arming and Safing Signals - contd.

Standard Signals Wands			
Personnel	Color	No.	Type
Ordnance Arming Crew	RED	1	Stubby Banded*
Ordnance Arming/ Safety Supervisor	RED	2	Standard Banded**

*One 3/4-inch band on the cone (plastic electricians tape is recommended)
**Two 3/4-inch bands spaced equal distance on the cone (plastic electricians tape is recommended)

Figure 6-1-2. Standard Signal Wands

6.1.7.3 The Security Officer is the designated representative of the CO responsible for planning, implementing, enforcing, and supervising the physical security and loss prevention programs of the command.

6.1.8 Physical Security and Loss Prevention Program. The physical security and loss prevention program is part of the overall security program at an activity. The physical security portion of the program is concerned with means and measures designed to safeguard personnel and protect property by preventing, detecting, and confronting acts of unauthorized access, espionage, sabotage, wrongful destruction, malicious damage, theft, pilferage, and other acts which would reduce to some degree the capability of the activity to perform its mission. Loss prevention is particularly concerned with preventing loss of supplies, tools, equipment, or other materials in use, storage, transit, and during the issue process. Concern is not only focused on the threat of criminal activity and acts of wrongdoing by forces external to the organizational unit, it is also specifically directed toward internal causes: theft and pilferage by those who have unauthorized access; in attention to physical security practices and procedures, and disregard for property controls and accountability. Physical security and loss prevention measures include instructions, procedures, plans, policies, agreements, systems, and resources committed and designed to safeguard personnel, protect property, and prevent losses, thereby enhancing readiness. OPNAVINST 5530.14 (Physical Security and Loss Prevention Manual) addresses physical security and loss prevention responsibilities.

6.1.9 Hazards of Electromagnetic Radiation to Ordnance (HERO) and HERO Emission Control (EMCON).

6.1.9.1 Technological advances have resulted in the proliferation of communication-electronic equipment and the development of higher power equipment that radiate electromagnetic energy (EM) energy. These advances, coupled with the trend to utilize more sensitive, low-power electronic circuits in the design of ordnance systems, perpetuate a long-standing hazard. The hazards that result from adverse interactions between the electromagnetic environment (EME) and the electrical initiators or initiating systems contained within ordnance systems are referred to in DOD terminology as HERO. The HERO problem arises from a fundamental incompatibility between the electrically initiated devices (EIDs) or EID firing circuits contained within the ordnance and the external radiated EME that the ordnance encounters during its stockpile-to-safe-separation Sequence (S4) progression. EIDs perform a variety of functions, such as initiating rocket motors, arming and detonating warheads, and ejecting chaff and flares. The HERO problem arises when any of these functions occur unintentionally or prematurely, as a result of exposure to EM energy.

There are two potential forms of such unintentional, RF-induced EID response:

a. Activation of the initiating device itself by EM energy coupled directly into the device or upset of an energized firing circuit, resulting in a firing signal erroneously being sent to the EID, and

b. Degradation or dudding of the initiating device by EM energy coupled directly into the device.

In case (a), accidental EID activation can have negative consequences on either safety or performance; that is, reliability. A safety consequence is the inadvertent actuation of an EID

that creates an immediate catastrophic event that has the potential to either destroy equipment or injure personnel, such as the firing of an inline rocket motor igniter; or the inadvertent actuation of an EID that increases the probability of a future catastrophic event by removing or otherwise disabling a safety feature of the ordnance item. This, for example, might be caused by the RF initiation of a piston actuator that removes a lock on the safe and arm (S&A) rotor of an artillery fuze, thus allowing a sensitive detonator to rotate in-line with the explosive train. Performance degradation can be any condition that does not have safety implications and is referred to as ”reliability”. Performance degradation may occur because an EID has been desensitized as a result of multiple low-level exposures, which would prevent it from firing when needed or because it already had been ignited. ”Safety” and ”reliability” categorizations should be determined by the procuring activity.

The combination of severe EME levels and sensitive, insufficiently protected components/circuits can have disastrous consequences. Although the problem was recognized in the late 1950s, it has persisted even today for three reasons; the proliferation of communication electronic equipment, the introduction of more powerful emitters, raising operational EME levels, and the use of sensitive electrically initiated systems. Therefore, it is necessary to positively control the electromagnetic radiation in areas where ordnance containing EIDs is being transported/stored, assembled/disassembled, staged, handled/loaded, etc. This positive control is achieved through HERO surveys and the development of HERO Emission Control (EMCON) bills.

A HERO survey provides a characterization of the installation/activity’s EME as a result of all of the installed transmitter/antennas, as well as a more detailed look at the operational environment in and around ordnance areas. OPNAVINST 8020.14 requires all installations/activities to be surveyed for HERO periodically and the result of a HERO survey is a HERO EMCON Bill. A HERO EMCON Bill is a set of directions for mitigating the HERO restrictions on ships and shore installations/activities. OPNAVINST 8020.14 further requires that HERO EMCON Bills be written for each shore station to specify emitter restrictions when maximum operational EME levels exceed the maximum allowable environments (MAEs) for susceptible items at respective ordnance locations. Additionally, the Navy establishes HERO EMCON Bills for all ships. The Navy categorizes all ordnance in terms of the relative immunity; for example, HERO SAFE ORDNANCE being the designation for ordnance that can be exposed safely to EME levels as high as those specified in MIL-STD-464. HERO SUSCEPTIBLE ORDNANCE and HERO UNSAFE ORDNANCE designations are reserved for items that have known susceptibilities, as shown by test or analysis, or for ordnance that have not been certified to the HERO requirements of MIL-STD-464.

An EMCON bill is developed by NOSSA and the implementation is often the responsibility of the combat system officer (CSO), electronic warfare officer (EWO), or for installations/activities, the explosives safety officer (ESO). Its purpose is to prescribe, through advance planning, the easiest and most efficient method of managing the conflict between the EME created by transmitting equipment and HERO-classified ordnance. The degree of relief from HERO EMCON restrictions that can be obtained by following a HERO EMCON bill is dependent upon two factors:

a. The amount and type of ordnance that is involved, and

b. Knowledge of the ambient radio frequency (RF) environment at locations where exposure occurs during presence, handling, loading, storage, assembly, and transportation operations.

6.1.9.2 Each activity shall implement a HERO EMCON Bill through a local HERO instruction delineating HERO requirements and responsibilities. NAVSEA OP 3565/NAVAIR 16-1-529 (Electromagnetic Radiation Hazards to Ordnance, Personnel, Fuel, and Other Flammable Materials) prescribes detailed operating procedures and safety precautions which should be included in the command's HERO instruction. All personnel who handle or work in close proximity to HERO-susceptible materials will thoroughly familiarize themselves with the contents of NAVSEA OP 3565/NAVAIR 16-1-529.

6.1.9.3 Prior to commencing operations involving ordnance classified as either HERO SUSCEPTIBLE or HERO UNSAFE ordnance, personnel in charge shall ensure that the proper HERO condition has been set and that appropriate and timely notification has been made to all concerned.

6.1.9.4 The Operations Officer and/or Explosive Safety Officer should review the command's HERO posture once every 5 years, or in the event there are major changes in the electronics suite, ordnance complement or handling procedures. NAVSEA OP 3565/NAVAIR 16-1-529, Volume II, Chapter 6 provides discussions on the requirements for HERO surveys and information on when and how to request a HERO survey.

6.1.10 Adverse Meteorological Disturbances. Lightning, high winds, precipitation, and thunderstorms are atmospheric disturbances that have a varied impact on the safe handling of ordnance. It is incumbent upon the CO to use prudent judgment in deciding to continue handling explosives when adverse environmental disturbances exist. When severe weather phenomena are forecast, security of ordnance shall take priority over all other storm preparation as delineated in the facilities severe weather bill.

6.1.11 Explosives Drivers.

6.1.11.1 Operators of self-propelled vehicles and equipment (except weapons loaders) carrying explosives shall be trained and qualified as explosives drivers in accordance with NAVSEA SW020-AF-ABK-010 (Motor Vehicle Driver and Shipping Inspectors Manual for Ammunition Explosives, and Related Hazardous Materials) and will also be qualified and certified in the handling and movement of the family of explosives involved in accordance with OPNAVINST 8020.14/MCO 8020.11.

6.1.11.2 Explosives drivers must meet the following minimum standards:

a. Be properly trained.

b. Be 18 years of age or older to operate motor vehicles transporting Hazardous Material on-station, explosives drivers shall be 21 years of age or over for off-station operations (except in the event of a national emergency).

c. Possess a valid state operator's license.

d. Possess a U.S. Government motor vehicle operator's identification card (SF46) with authorized equipment and the words "EXPLOSIVES DRIVER" inscribed on the reverse side.

e. Possess a current Medical Examiner's Certificate (MEC).

6.1.11.3 Operators of material handling equipment and weapons loaders shall be properly trained and are exempt from SF46 and state operator's license requirements provided they have a valid ground support equipment operator's license for each specific type equipment they are authorized to operate.

6.1.12 Explosive Ordnance Disposal.

6.1.12.1 The Explosive Ordnance Disposal (EOD) detachment serves as the principal advisor to the Weapons Officer on safety precautions and procedures to be followed in rendering safe explosives which may constitute a hazard to the command.

6.1.12.2 Mission. The mission of the Navy EOD group/unit/detachment is to provide the Department of the Navy with the capability for surface and underwater detection, identification, render safe, recovery, field and laboratory evaluation, and disposal of explosive ordnance which has been fired, dropped, launched, or placed in such a manner as to constitute a hazard to operation, installation, personnel, or material. The mission includes render safe and/or disposal of any ordnance items which have inadvertently become hazardous by damage or deterioration when the disposal of such items is beyond the capabilities of personnel normally assigned the responsibility for routine disposition. Refer to OPNAVINST 8027.6 for the mission and tasks of the EOD.

6.1.12.3 Prior to deployment, EOD services and support shall be requested in accordance with applicable Fleet Commander directives and Type Commander instructions.

6.1.13 Explosives Safety Waivers/Exemptions.

6.1.13.1 If operational commitments necessitate deviation from prescribed ammunition stowage and handling regulations, a waiver or exemption shall be requested in accordance with OPNAVINST 8020.14/MCO P8020.11. Approval of this waiver or exemption must be received prior to deviating from established regulations. The following paragraphs excerpted from OPNAVINST 8020.14/MCO P8020.11 have been amplified to facilitate the waiver/deviation request procedures. For more detailed information, refer to the basic instruction.

6.1.13.2 Definitions:

a. Deviations. A departure from an established explosives safety rule or standard. For explosive safety applications, a deviation authorized by the Chief of Naval Operations (CNO) is considered to be a departure from Navy or Department of Defense criteria, but under strictly controlled and regulated conditions based upon compelling operational need.

b. Waiver. A deviation from mandatory explosive safety requirements approved for the purpose of temporary satisfaction of recurring readiness or operational requirements. A waiver is issued pending the completion of corrective measures, generally for a maximum of two years.

c. Event Waiver. A deviation approved on a case-by-case basis for a particular evolution, issued for a limited period to meet a specific, nonrecurring readiness or operational requirement which cannot be satisfied otherwise.

d. Exemption. A deviation from mandatory explosive safety requirements approved for the purpose of long-term satisfaction of recurring readiness or operational requirements. Exemptions are generally issued for a maximum of 5 years, but will not be granted for a period in excess of that estimated for correction of the deficiency.

e. Operational Necessity. A situation of such compelling urgency that failure to grant a deviation from established safety criteria could be harmful to personnel and impact mission readiness.

6.1.13.3 Explosives Safety Waiver/Exemption Submission. Commands identifying an urgent need for a waiver/exemption shall submit a request to CNO (N411) in accordance with the procedures and formats prescribed in OPNAVINST 8020.14/MCO P8020.11.

6.1.14 Conventional Weapons Safety Assistance Teams. There are two conventional weapons safety assistance teams; one is assigned to the Pacific Fleet and one to the Atlantic Fleet. These teams are composed of specially trained, experienced ordnancemen who provide assistance to Fleet activities in all areas of conventional ordnance handling, stowage, and safety. The teams are available to make visits to commands during periods of extensive explosive evolutions and predeployment training involving ordnance and other periods. Their assistance may be requested by individual units requiring or desiring assistance in any operational or training ordnance evolution.

6.1.15 Static Displays.

6.1.15.1 The use of live ordnance, and ammunition, for purposes such as training, museum display, demonstrations, public functions, patriotic occasions or otherwise, is prohibited. Ordnance and ammunition items used for such purposes shall be inerted in accordance with the activity standard operating procedure and shall be performed by personnel certified in accordance with OPNAVINST 8020.14/MCO P8020.11. Marine Corps activities shall comply with the additional requirements of MCO 1510.78A, MCO 3571.2F, and MCO P8020.10A. Activities shall maintain a record of all ammunition currently held by the activity, and that ammunition which has been certified inert. Inert ammunition is identified by a Department of Defense Identification Code (DODIC)/Naval Ammunition Logistics Code (NALC) and National Stock Number (NSN). In addition, some inert ammunition is identified by a serial number on the item. For additional requirements on identification of inert ammunition, see NAVSEA OP 5, Vol. 1.

6.1.15.2 The use of crew served weapons (functional or rendered non-operational) for purposes such as training (with the exception of aerial gunner training), museum display, demonstrations, public functions, patriotic occasions or otherwise, is prohibited.

6.1.15.3 Inert ordnance on display shall be afforded the same security as is required for live ordnance. It shall be under constant observation to prevent tampering or loss.

6.1.15.4 Prior to permitting public access to the interior of aircraft on static display, all pyrotechnic devices which may be hazardous to the general public shall be removed.

6.1.16 Working Parties. Personnel whose sole contact with explosives occurs when assigned to a working party for the purpose of handling explosives are exempt from the requirement of the ordnance handling qualification and certification program. However, they shall be thoroughly indoctrinated in the safety precautions relating to the type ordnance they will be handling. Supervisors of these personnel shall be qualified and certified at the individual or team leader level in accordance with OPNAVINST 8020.14/MCO P8020.11.

CHAPTER 6.2

Conventional Weapons Handling Procedures Ashore

Table of Contents

Paragraph	Subject	Page
6.2.1	General	6-2-1
6.2.2	Responsibilities	6-2-1
6.2.3	Ammunition Allowances	6-2-1
6.2.4	Ammunition Accountability and Management	6-2-1
6.2.5	Ammunition Requisition, Issue, and Return Procedures	6-2-2
6.2.6	Armament Weapons Support Equipment	6-2-3
6.2.7	Transportation of Explosives	6-2-3
6.2.8	Magazines and Magazine Areas	6-2-5
6.2.9	Assembly and Disassembly	6-2-5
6.2.10	Ordnance Handling and Loading Pads and Combat Aircraft Loading Areas	6-2-6

CHAPTER 6.2

Conventional Weapons Handling Procedures Ashore

6.2.1 General. This chapter provides general and specific information for the safe and efficient handling, transportation, and stowage of ammunition and explosives ashore. The regulations and safety precautions set forth herein do not change or modify existing directives, nor do they relieve cognizant personnel of their responsibility for the use of good judgment and observance of safety precautions.

6.2.2 Responsibilities. Duties and responsibilities of authoritative personnel concerned with the handling of explosives at shore activities are delineated in Chapter 1 of NAVAIR 00-80T-103, Naval Air Training and Operating Procedures Standardization (NATOPS) Conventional Weapons Handling Procedures Manual (Ashore) and in Volume II, Chapter 6.1 of this manual.

6.2.3 Ammunition Allowances.

6.2.3.1 The load plan/load planning is authorized and maintained by authority of Appendix E. Each Navy and Marine Corps station which stocks and stores ammunition to support its stated mission has a load plan/load planning prepared by the Naval Supply Systems Command Global Logistics Support (NAVSUP GLS AMMO). The Weapons Officer is responsible for maintaining load plan/load planning allowances or letters of waiver from the applicable authority.

6.2.3.2 Special purpose ammunition other than that authorized by load plan/load planning may be stocked with the approval of Type Commanders.

6.2.3.3 The Weapons Officer shall request modifications to load plan/load planning consistent with stowage capabilities, usage rates, and annual training ammunition allowances.

6.2.4 Ammunition Accountability and Management.

6.2.4.1 The policy, procedures, and responsibilities for management of conventional ammunition as promulgated in NAVSUP P-724 shall be adhered to.

6.2.4.2 The Weapons Officer shall maintain a stock record for all conventional ammunition in the station's custody, utilizing an established uniform ammunition stock recording procedure for automated and non-automated activities. Automated activities are all Transaction Item Report (TIR) stock points with the Ordnance Management System (OMS) or Ordnance Information System-Wholesale (OIS-W) and Ammunition Transaction Reports (ATR) activities with the Retail Ordnance Logistics Management System (ROLMS) or Ordnance Information System-Retail (OIS-R).

a. ROLMS and/or OIS-R are an integrated system of applications software designed to manage non-nuclear expendable ordnance. It provides for the automation of the receipt, issue, inventory record keeping and reporting of ammunition assets and movements with the ultimate objective being the enhancement of Fleet readiness and stock point ordnance management.

b. ROLMS was designed to operate as either a stand-alone system residing on a personal computer or in a client/server network environment. OIS-R was designed to operate in a client/server network environment.

6.2.4.3 Non-mechanized activities shall maintain ammunition stock record cards. There are three forms available for ammunition stock recording. An Ammunition Master stock Record Card (NAVSUP 1296) and either a Lot/Location Card (NAVSUP 1297) or a Serial/Location Supplemental Card (NAVSUP 1356) will be maintained for every Naval Ammunition Logistics Code (NALC) carried on board. Lot/location or serial/location supplemental cards should be placed with the appropriate master stock record card. Another supplemental master stock record card by National Item Identification Number (NIIN) will be used if a second NIIN is received. All entries should be posted promptly and in ball point pen. When transferring to a new stock record card, the existing stock record card will be retained for audit purposes.

6.2.4.4 The Weapons Officer shall maintain a Notice of Ammunition Reclassification (NAR) file in accordance with NAVSUP P-801 and ensure that all ammunition carried on the master stock records is properly coded and identified.

6.2.4.5 All departments and tenant commands shall return unserviceable ammunition, and any other ammunition not required or authorized, to the Weapons Officer for further disposition. The Weapons Officer shall manage the ammunition disposition program in accordance with NAVSUP P-724.

6.2.5 Ammunition Requisition, Issue, and Return Procedures.

6.2.5.1 CAD/PADs are explosive parts in Federal Stock Class (FSC) 1377 used in aircraft, ship, submarine, and personnel proactive equipment. CAD/PAD life cycle support, maintenance, and supply chain management policies and responsibilities are delineated in this manual, CNAFINST 4790, the NAVSUP P-724, and in the NAVAIR 11-100-1.1. All CAD/PAD supply chain management (ordering, requisitions, receipts, etc.), in-service support (safety, maintenance, handling, use, packaging, deficiency reporting, asset management and storage, etc) and disposition shall be in compliance with the requirements in the following manuals, CNAFINST 4790, the NAVSUP P-724, and the NAVAIR 11-100-1.1. All personnel working with CAD/PADs (maintenance handling, or use) shall register for the USN/USMC Virtual Fleet Support (VFS) system [https://cadpad.ih.navy.mil] for access to the NAVAIR 11-100-1.1 in order to maintain currency on safety, life cycle management, and supply chain requirements for CAD/PADs.

6.2.5.2 Ammunition requiring assembly shall be assembled by Navy Munitions Command (NMC) Detachments, Shipboard Weapons Departments, and Marine Corps Air Stations (Station Weapons) and issued as an AUR in the configuration specified on the DD 1348-1 requisition.

6.2.5.3 All ammunition other than AURs shall be issued in their original shipping containers or in an approved metal ammunition shipping container.

6.2.5.4 Due to the Hazards of Electromagnetic Radiation to Ordnance (HERO) considerations, chaff, decoy flares, associated impulse cartridges, and 2.75-inch and 5.00-inch rockets shall be issued only after being properly and safely loaded inside the dispenser unit or in approved metal ammunition shipping container.

6.2.5.5 All ammunition returned to the Weapons Department or NMC Detachment shall be accompanied by a properly completed DD 1348-1 (DOD single line item release/receipt docu-

ment) in its prescribed shipping container. The Weapons Department or NMC Detachment shall provide shipping containers when the original is not available. Containers and documents shall reflect the national stock number, NALC, MK and MOD, nomenclature, lot number(s), serial numbers, and condition code and open/expiration date, if applicable.

6.2.5.6 For CADs and PADs, a DD 1577-2 (unserviceable (repairable) tag-material) shall accompany the DD 1348-1 turn in document and material. All repairable CADs and PADs shall be turned in packaged in the shipping container received with the replacement item.

6.2.5.7 The Weapons Department or NMC Detachment shall return to not ready-for-issue stock all ammunition returned from squadrons in Condition Code K (serviceable condition unknown) pending verification of actual condition code. The item(s) shall be accompanied by a properly completed DD 1348-1 indicating the known item data, the material condition code, and annotated Gain by Fleet Return. Disposition will be requested through normal channels.

6.2.6 Armament Weapons Support Equipment. All equipment authorized for the handling of conventional weapons shall be maintained and serviced in strict accordance with existing directives. Detailed information pertaining to the handling of such equipment can be found in Volume II, Section 8.

6.2.7 Transportation of Explosives.

6.2.7.1 All vehicles used to transport ammunition and explosives on or off military installations shall have fully operable electrical and mechanical systems and be equipped with all safety equipment required by NAVSEA SW020-AC-SAF-010 and NAVSEA SW020-AF-ABK-010.

6.2.7.2 The driver of on-base, explosive-laden vehicles shall be thoroughly familiar with the applicable portions of NAVSEA SW020-AC-SAF-010 and SW023-AG-WHM-010.

6.2.7.3 All rules and regulations pertaining to on-station transportation of explosives shall apply for off-station movement.

6.2.7.3.1 The Supply Officer or NMC Detachment Transportation Section will schedule all off-station explosive movements utilizing commercial carriers or public works department vehicles and drivers. All off-station explosive movements shall be in accordance with the following government directives:

a. DOD Regulation 5200.1-R.

b. OPNAVINST 5530.13.

c. CINCPACFLTINST 8010.12 Pacific Fleet activities only.

d. NAVSEA SW020-AF-ABK-010.

e. NAVSEA SW020-AG-SAF-010.

f. NAVSUP P-724.

g. NAVSEA SW020-AC-SAF-010.

6.2.7.3.2 The Public Works Transportation Officer shall ensure all vehicles provided to the Supply Officer and Public Works Officer for off-station explosive movements are in fully operable condition and capable of passing inspection in accordance with DD 626 (Motor Vehicle Inspection Form).

6.2.7.3.3 Required off-station explosives movement forms shall be completed as follows:

a. Supply Officer or NMC Detachment Transportation Section.

(1) DD 1907, Signature and Tally Record.

(2) DD 1387-2, Special Handling Data/Certification.

(3) DD 1348-1, DOD Single Line Item Release/Receipt Document.

(4) Standard Form 1183, Government Bill of Lading.

b. Public Works Officer.

(1) NAVFAC 9-11240/1, Vehicle/Equipment Request and Record.

(2) NAVMC 10627, Vehicle/Equipment Operational Record.

c. Weapons Officer.

(1) DD 836, Special Instructions for Motor Vehicle Drivers.

(2) DD 626, Motor Vehicle Inspection.

(3) DD 1387-1C, Waterproof Shipping Tag.

(4) NAVSEA 8023/3, Railroad Car Inspection Report.

6.2.7.3.4 For off-station shipments, the Supply Officer or NMC Detachment Transportation Section shall ensure the following directives are complied with for shipment security and documentation:

a. DOD Regulation 5200.1-R.

b. DOT Exemption E-868.

c. OPNAVINST 5530.13.

d. Chapter 7 and Table 7-3 of NAVSEA SW020-AG-SAF-010.

e. NAVSUP P-803.

f. NAVSUP Manual, Volume V (Article 52150).

6.2.7.3.5 United States Navy numbered seals provided by the Supply Officer or NMC Detachment shall be used on the following Arms, Ammunition, and Explosives (AA&E):

a. All rail and truck shipments of classified AA&E categorized as I, II, III, or IV security risk.

b. All metal containers designed for strap-seal (missile containers).

c. All closed compartments of vehicles when used to transport AA&E category I, II, III, or IV material.

d. Carload and less than carload shipments of AA&E under Department of Transportation (DOT) Exemption E-868.

e. AA&E shipments to which the carrier is to be denied access.

6.2.7.3.6 When seals are applied to commercial carrier shipments, the seal numbers, seal ownership, and applying activity shall be annotated on the Government Bill of Lading and DD Form 1348-1.

6.2.7.3.7 When a shipment contains classified material, a seal tag and a seal notice shall be affixed on and near the seal.

6.2.7.3.8 When AA&E is classified CONFIDENTIAL, unit weight is over 200 pounds, and material is packaged in a container with strap seals applied, the material shall be shipped as unclassified. In addition, CONFIDENTIAL material packaged in a domestic or Fleet issue unit load in accordance with MIL-STD/WR50 series requirements shall be shipped as UNCLASSIFIED. In either case, the material may be shipped by any authorized mode.

6.2.7.3.9 Incoming sealed shipments shall be thoroughly inspected by the receiving department (Weapons, NMC Detachment or Supply). Seal numbers shall be compared with the DD 1348-1 and the Government Bill of Lading. If seal is intact and the numbers match, the word ”INTACT” shall be annotated on the Government Bill of Lading. Refer to NAVSEA SW020-AC-SAF-010, Volume 1, for procedures to follow for discrepant shipments.

6.2.8 Magazines and Magazine Areas.

6.2.8.1 All magazines and magazine areas are under the cognizance of the station Weapons Officer or NMC Detachment OIC and shall be administered and maintained in accordance with NAVSEA OP 5, Volume 1 and NAVSEA SW020-AC-SAF-010.

6.2.8.2 The physical security of ammunition and explosives stored in the station’s magazines shall be provided for in accordance with OPNAVINST 5530.13.

6.2.8.3 Ammunition storage requirements, magazine condition, and magazine area encroachment due to off base construction shall be continually monitored to ensure that explosive safe quantity distances and storage criteria is maintained in accordance with NAVSEA OP 5. Should a violation of regulations be detected, and resolution at the local level is impossible, a waiver or exemption shall be requested in accordance with OPNAVINST 8020.14/MCO P8020.11.

6.2.9 Assembly and Disassembly.

6.2.9.1 Due to the inherent dangers involved, the assembly and disassembly of Aviation Ordnance shall be closely controlled. All weapons unpacking, assembly, and disassembly shall be accomplished in accordance with NAVSEA OP 5, NAVSEA OP 3565/NAVAIR 16-1-529, the appropriate checklist, and the Naval Air Systems Command (NAVAIRSYSCOM) technical manuals.

6.2.9.2 Assembly or disassembly of components shall be conducted only in the station’s approved ordnance assembly area and shall be accomplished by properly qualified and certified Weapons Department or NMC Detachment personnel and personnel at Marine Corps Air Stations (Station Weapons).

6.2.9.3 The assembly and disassembly areas shall be maintained as a HERO safe whenever the ordnance being handled is HERO SUSCEPTIBLE. In the event HERO SUSCEPTIBLE

ordnance must be handled, the officer in charge of the evolution shall request the operations officer to set the appropriate HERO EMCON condition prior to exposing the HERO SUSCEPTIBLE ordnance to radio frequency environments.

6.2.10 Ordnance Handling and Loading Pads and Combat Aircraft Loading Areas.

6.2.10.1 Ordnance handling pads and/or Combat Aircraft Loading Areas (CALA) are areas that are designed and constructed to meet the explosive safety requirements of NAVSEA OP 5 and Department of Defense (DOD) explosive safe quantity distances during the loading or downloading of high explosives on combat and cargo aircraft. A map depicting the exact location of the ordnance handling pad and/or CALA should be included in the station's air operations manual and ordnance handling instruction.

6.2.10.2 Use of the pad and/or CALA is mandatory during the loading, downloading, and rearming of aircraft carrying hazard class 1.1 and 1.2 explosives, also certain hazard class 1.3 and 1.4 explosives are required to use the pad and/or CALA.

6.2.10.3 The pad and/or CALA shall be used for all emergency safing and downloading of HERO UNSAFE or HERO SUSCEPTIBLE ordnance and hung ordnance that cannot be adequately safed in the arming and dearming areas.

6.2.10.4 Rules and regulations pertaining to the operation and scheduling of the ordnance handling pad and/or CALA shall be included in the activities ordnance handling instructions and the air operations procedures.

CHAPTER 6.3

Conventional Weapons Handling Procedures Afloat (LHA, LHD, and LPD)

Table of Contents

Paragraph	Subject	Page
6.3.1	General	6-3-1
6.3.2	Responsibilities	6-3-1
6.3.3	Relevant Publications	6-3-2
6.3.4	Training	6-3-2
6.3.5	Aviation Ordnance Safety Assessments Program	6-3-6
6.3.6	Personnel Augmentation	6-3-6
6.3.7	Explosive Ordnance Disposal	6-3-10
6.3.8	Ammunition Allowance and Ordnance Requisitioning and Issue	6-3-10
6.3.9	Handling and Stowage	6-3-10
6.3.10	Weapons Replenishment	6-3-10
6.3.11	Intermediate Level Maintenance	6-3-10
6.3.12	Armament Weapons Support Equipment (AWSE)	6-3-11
6.3.13	Assembly and Disassembly	6-3-11
6.3.14	Aircraft Loading and Downloading	6-3-11
6.3.15	Aircraft Arming and Dearming	6-3-12
6.3.16	Recovery of Hung and Unexpended Ordnance	6-3-12

List of Illustrations

Figure	Title	Page
6-3-1	Ordnance Handlers Listing of Schools	6-3-4
6-3-2	Aviation Ordnance Safety Assessment (AOSA) Checklist	6-3-7

CHAPTER 6.3

Conventional Weapons Handling Procedures Afloat (LHA, LHD, and LPD)

6.3.1 General.

6.3.1.1 Amphibious assault and transport dock ships are tasked to support a wide range of aviation-related ordnance functions attendant to Marine Corps strike warfare and amphibious assault operations. Tasks include the full range of ordnance support for attack helicopters, vertical and short takeoff, landing aircraft ordnance operations, service of utility and cargo helicopter defensive weapon systems, and support of aircraft electronic countermeasure systems.

6.3.1.2 The prerequisites for safe and successful Aviation Ordnance evolutions aboard LHA, LHD, and LPD class ships requires careful planning and execution from stowage to launch and recovery. This chapter provides information that will aid in the standardization of procedures which provide guidance for personnel involved in the requisitioning, receipt, strikedown, stowage, breakout, assembly, strikeup, staging, and loading of air launched weapons on amphibious aviation and air-capable ships.

6.3.2 Responsibilities.

6.3.2.1 Commanding Officers (COs) shall ensure that all squadron and ship ordnance personnel are properly indoctrinated in the safe and proper methods of handling and securing explosive ordnance carried by their ships. COs shall also ensure that:

a. All personnel handling ordnance are trained, qualified, and certified in accordance with OPNAVINST 8020.14/MCO P8020.11.

b. All ammunition is secured in accordance with guidance set forth in NAVSEA SG420-B5-WHS-010, NAVSEA SWO23-AJ-WHS-010, and NAVSEA OP 4.

c. Daily inspections of all ammunition magazines are conducted in accordance with NAVSEA OP 4 and applicable preventive maintenance system maintenance requirement cards.

d. All weapons handling equipment is inspected and tested as per NAVSEA OP 4, NAVSEA SW023-AH-WHM-010, NAVSEA S9086-XG-STM-010, NAVSEA SG420-AP-MMA-010, NAVAIR 17-1-127, and applicable surface and aviation preventive maintenance system maintenance requirement cards.

6.3.2.2 Weapons Officer. The duties and responsibilities of the Weapons Officer are outlined in Chapter 6.1.

6.3.2.3 Aircraft Handling Officer. In the area of ordnance handling, the Aircraft Handling Officer is responsible for setting environmental alert and coordinating with the Weapons Officer and Electronics Officer in setting Hazards of Electromagnetic Radiation to Ordnance (HERO)

and emission control conditions. Additionally, the Aircraft Handling Officer shall ensure that all conditions or restrictions pertaining to the movement or handling of explosive-loaded aircraft are strictly adhered to and are in accordance with NAVAIR 00-80T-106 (LHA and LHD only) and SG420-B5-WHS-010 (LHA, LHD and LPD).

6.3.2.4 Air Combat Element (ACE). Unit Commanders are responsible for initiating, maintaining, and monitoring dynamic weapons handling, loading, downloading, arming, and dearming procedures within their units. The ACE Ordnance Officer, working in conjunction with the Weapons Officer, shall determine the time of delivery and the types and quantities of aviation ordnance material to be delivered to the aircraft loading areas.

6.3.3 Relevant Publications. The rules and regulations contained in this chapter are based in whole or in part on the publications listed in Volume III, Appendix B. For expanded or detailed guidance in all facets of ordnance handling aboard amphibious ships, refer to these publications.

6.3.4 Training.

6.3.4.1 Numerous formal schools are available for training of shipboard and squadron Aviation Ordnance personnel. Although designed specifically for CVN Aviation Ordnance personnel, the following courses shall be used as indicated for aviation ordnancemen assigned to amphibious ships:

a. All personnel involved with Vertical Replenishment (VERTREP) operations must comply with the training requirements set forth in the NA-00-80T-105 and NA-OO-80T-106.

b. CVN Air Launched Weapons Supervisor, course number C-646-4108, and CVN Air Launched Ordnance (basic) course number C-646-7007, are 12-day courses that provide ordnance personnel with a thorough knowledge of the procedures and safety precautions relating to air launched weapons handling, storage, and assembly.

c. Ammunition Administration Course (J-041-0103). At least one enlisted aviation ordnanceman or gunners mate and one officer responsible for the requisitioning and accounting of the ship's mission load allowance, shipfill ammunition allowance, and Landing Force Operational Reserve Material (LFORM) class V (W) ammunition shall attend this course.

d. Air Launched Guided Missile Intermediate Maintenance Course (C-122-3111). At least one aviation ordnanceman, E-5 or above, whose primary duties include the supervision of Fleet Intermediate maintenance on air launched missiles shall attend this course.

e. Strike Armament Equipment Intermediate Maintenance Repair (C-646-3118). Aviation ordnancemen assigned to the Aircraft Intermediate Maintenance Department/Fleet Readiness Center (AIMD/FRC) shall attend this course. Course includes training on Aircraft Armament Equipment (AAE), operational checkout procedures, corrosion control, troubleshooting procedures, periodic maintenance procedures, component removal, repair, replacement procedures, use of special tools and test equipment, use of publications, and use of safety and administrative procedures applicable to AAE items.

f. Magazine Sprinkler Systems Operations Maintenance and Repair (K-041-2048). Includes classroom and laboratory instruction on theory of operation, valves, thermo-pneumatic controls,

and piping. During practical sessions students operate, test, isolate casualties, and repair operational classroom mock-up sprinkler systems (both wet and dry type), and repair all associated valves. Required for all personnel assigned magazine sprinkler systems maintenance duties.

g. Magazine Sprinkler Systems Inspector (K-041-2137). Is a follow-on course to qualify selected personnel attached to inspection and repair activities for conducting shipboard magazine sprinkler system inspections. Course includes recognition of deviations between installed equipment and directives, detecting incorrect maintenance actions, determining installation criteria for wet and dry type magazine sprinkler systems, thermo-pneumatic automatic controls, and inspection techniques. Practical application is conducted on mock-up trainers. Required for all personnel assigned magazine sprinkler systems inspection duties.

h. Retail Ordnance Logistics Management Systems (ROLMS), Intermediate (J-041-2104). Students learn how to perform logistics management duties utilizing the automated, computer-based procedures of the ROLMS. Subjects include generating and maintaining ROLMS-based ammunition records relating to requisitions, receipts, reporting Notices of Ammunition Reclassification (NARs) allowances, and other technical information required to manage Navy, Marine Corps, and other service ammunition.

i. ROLMS, Operator Advanced (J-041-2105). Students learn how to perform advanced logistics management duties utilizing the automated, computer-based procedures of ROLMS. Subjects include generating and maintaining ROLMS-based ammunition records relating to requisitions, receipts, issues, expenditures, inventory management and controls, reporting, NARs allowances, and other technical information required to manage Navy, Marine Corps, and other service ammunition.

j. See Figure 6-3-1 for Ordnance Handlers Listing of Schools.

6.3.4.2 Quotas for and information on the above listed courses can be obtained from CNATTU quota control at Naval Air Station (NAS) North Island, CA and NAS Norfolk, VA.

6.3.4.3 Training with Aviation Ordnance is sometimes difficult to achieve while in port. However, requisite training is available from the Fleet Weapons Support Team (FWST) member, Naval Air Warfare Center Weapons Division (NAWCWD), China Lake, Navy Civilian Technical Specialists assigned to Commander, Naval Surface Force, Atlantic Fleet (COMNAVSURFLANT) N423 and Commander, Naval Surface Forces (COMNAVSURFOR) N423.

6.3.4.4 As discussed above for amphibious ships, other air-capable amphibious ship personnel must be prepared for and trained to meet Aviation Ordnance contingencies. To ensure the proper degree of safety for the protection of the ship, material, and personnel, the procedures of this chapter, NAVAIR 00-80T-106 (LHA and LHD), NAVAIR 00-80T-122 (LPD) and SG420-B5-WHS-010, shall be closely followed.

6.3.4.5 Hands-on training must be used as the primary means to achieve and maintain proficiency, and ultimately to measure the readiness of the ship and embarked squadrons. Before embarkation of the squadron, ships weapons personnel must be thoroughly trained, qualified, and certified on the handling, stowage, assembly, and strikeup or strikedown procedures for the mission load allowance ammunition. This requirement can be achieved through the formal schools listed in paragraph 6.3.4.1, a formal lecture-type training syllabus and hands-on training utilizing the inert training package which is part of the LHA/LHD LFORM. Realistic training

COURSE TITLE	CIN#	LOCATION	TRACK/UMBRELLA
Weapons Department General Aviation Ordnance	C-646-4109	CNATTU, Whidbey Island, North Island, Mayport, Norfolk	D-646-7007/E-646-7007
Air Launched Weapons Ordnance Supervisor Course	C-646-4108	CNATTU, Whidbey Island, North Island, Mayport, Norfolk	D-646-7007/E-646-7007
Air Launched Guided Missiles Intermediate Maintenance	C-122-3111	CNATTU, Whidbey Island, North Island, Mayport, Norfolk	D-646-7007/E-646-7007
Precision Guided Weapons Intermediate Maintenance	C-122-3113	CNATTU, Whidbey Island, North Island, Mayport, Norfolk	D-646-7007/E-646-7007
Quickstrike Mines MK 62 and MK 63 General Ordnance	C-646-4106	CNATTU, Whidbey Island, North Island, Mayport, Norfolk	D-646-7007/E-646-7007
Mobile Ordnance Training	D-500-2007 E-500-2007	Norfolk North Island	MOTT
Quickstrike Mine Training	D-500-2014 E-500-2014	Norfolk North Island	MOTT
Fleet (Ordnance) Sentencing Brief	D-500-2012 E-500-2012	Norfolk North Island	MOTT
AVORD Intermediate Maintenance Technician	C-646-3105	CNATTMARU/ DET, MCAS Cherry Pt., NC	
Aviation Ordnance Systems Tech Course MEU Strand	C-646-3112	CNATTMARU/ DET, MCAS Cherry Pt., NC	
Aviation Ordnance Systems Tech Course F-18 Strand	C-646-3867	CNATTMARU/ DET, MCAS Cherry Pt., NC	
Armament Weapons Support Equipment Tech	C-646-3109	CNATTU North Island, Norfolk	D-646-7008/E-646-7008
Armament Weapons Support Equipment Mgr	C-646-3108	CNATTU Whidbey Island, Norfolk	D/E-646-7100

Figure 6-3-1. Ordnance Handlers Listing of Schools

COURSE TITLE	CIN#	LOCATION	TRACK/ UMBRELLA
Armament Weapons Support Equipment Tech	C-646-3109	CNATTU North Island, Norfolk	D/E-646-7008
Aviation Ordnanceman	C-646-2011	NETC Pensacola	
Aviation Ordnanceman Navy Difference Training	C-646-2012	NETC Pensacola	
Aviation Ordnance Officer Career Progression Level 1	Q-4E-0010	NAVAVSCOLSCOM	
Aviation Ordnance Officer Career Progression Training Level 2	Q-4E-0011	NAVAVSCOLSCOM	
Aviation Ordnance Officer Career Progression Training Level 3	Q-4E-0012	NAVAVSCOLSCOM	
Introduction To Quickstrike Mines	D-500-2014	FASO Norfolk	MOTT
Cargo/Weapons Elev Maint (Mechanical Track)	A-690-0100	SERVSCHCOM Great Lakes	
Cargo/Weapons Elev Maint (Electrical Track)	A-690-0099	SERVSCHCOM Great Lakes	

Figure 6-3-1. Ordnance Handlers Listing of Schools - contd.

scenarios with actual breakout, assembly, strikeup and strikedown will provide the CO with the means to achieve the desired degree of readiness. Squadron Commanders must coordinate with ships personnel in scheduling frequent loading drills and captive carry training that will exercise the ship and squadron as a team and fine tune the readiness of the amphibious task force.

6.3.5 Aviation Ordnance Safety Assessments Program.

6.3.5.1 Aviation Ordnance Safety Assessments (AOSA) are conducted at the direction of the Type Commander, Assistant Chief of Staff for Aviation to determine the ship's ability to handle and store aviation ordnance and provide an opportunity to demonstrate adherence to established safety procedures. This is not considered an inspection and is conducted in accordance with COMNAVSURFORINST 8023.1. All aspects (storage spaces, assembly areas, support equipment, routes of ordnance movement, HERO/EMCON requirements, training and certification programs) of aviation ordnance handling are reviewed during the assessment and assist visit. Figure 6-3-2 is the AOSA checklist.

6.3.5.2 The AOSA is conducted in two phases. Phase I is a formal brief to Aviation Combat Element (ACE) ordnance personnel given by the TYCOM FWST representative prior to ship embarkation. The phase I brief gives the ACE an indoctrination of what to expect integrating with the ship (i.e. Ship's ordnance SOP, ordnance flow routes, Air Planning Board, rocket build up areas, EMCON procedures etc.). The Phase II is the gathering of data and assessment normally conducted during the COMPTUEX of the work up cycle.

6.3.5.3 The AOSA Phase II provides an opportunity for the ship to demonstrate adherence to established safety procedures for handling, stowage, breakout, build up and the delivery to the flight deck of aviation ordnance. It also allows the ACE ordnance personnel to demonstrate the safe adherence to aircraft weapons systems checklist for the release and control electrical checks, weapons inspection, loading and downloading of aviation ordnance aboard aircraft. During this phase, the AOSA member must attempt to identify all shortfalls in ordnance material, support equipment, training, logistics and publications. The data obtained by the AOSA provides the Weapons Department, and the ACE with immediate feedback and comprehensive sources of available hardware and training to enhance readiness.

6.3.5.4 The AOSA member will conduct an in brief and an out brief to the ships Commanding Officer, Weapons Department Head (Gun Boss), Ordnance Handling Officer (OHO), ACE Commanding Officer, ACE Ordnance Officer and ACE Aircraft Maintenance Officer. The MEU Commander will receive an out brief upon request.

6.3.5.5 Upon TYCOM receipt of a request from the ACE and ship for scheduling an AOSA, the FWST representative will coordinate with the TYCOM ACOS representative and a naval message will be sent to NAVAIRWARCENWPNDIV, China Lake requesting AOSA support. Upon receiving approval from NAVAIRWARCENWPNDIV the TYCOM will send a response message to the ACE and ship providing them with name, security clearance data, and dates for the AOSA Phase I and Phase II.

6.3.6 Personnel Augmentation. Since there are no Aviation Ordnance personnel assigned to LPD class ships, augmentation will be required from the LHA and LHD as directed by the amphibious Squadron Commander.

AOSA Checklist

ADMINISTRATION:	YES	NO
1. Does Organization have a qualification/certification board established as per OPNAVINST 8020.14/ MCO P8020.11?		
2. Are qualification/certification records properly utilized and maintained?		
3. Are individuals recertified annually?		
4. Does the ship have an aviation ordnance handling instruction?		
5. Does the ship have armament support equipment allowance and inventory lists?		
6. Are magazine access procedures established/maintained properly?		
7. Is there a cross-reference filing system on the Notice of Ammunition Reclassification System (NARS)? Are all applicable NARS on hand?		
8. Have all discrepancies been corrected from the latest COSR inspection?		
9. Has the ship requested EOD support for the upcoming deployment?		
10. Have the NAVAIR airborne weapon/stores loading manual/checklists been verified with NAVAIR 01-700?		
RADHAZ AWARENESS:	**YES**	**NO**
1. Does the ship have an EMCON bill?		
2. Does the ship have a HERO bill?		
3. Has a current HERO survey been accomplished within 24 months? Date _____		
4. Was the ordnance crew leader knowledgeable on when to set the HERO/EMCON condition for each weapon?		
5. Were HERO/EMCON conditions set during weapons assembly, if required?		
6. Did the ship set HERO/EMCON conditions for aircraft returning with HERO-unsafe ordnance aboard?		
ORDNANCE STOWAGE/ASSEMBLY/STAGING:	**YES**	**NO**
1. Are there any unauthorized items (especially combustibles) stowed in magazines or lockers?		
2. Are the stow(s) properly stacked, blocked, braced, and tied down to prevent movement/damage?		
3. Is the inert ammunition conspicuously marked and readily identifiable, if stowed with the live version?		
4. Are reliable communications maintained in the handling areas for contact with weapons officer/ AWMCS, air boss, and flight deck officer?		
5. Is the firefighting equipment in magazines and lockers maintained in good order, tested, and properly stowed?		
6. Are the exposed ammunition lockers maintained (latches, hinges, dogs, etc.) free of corrosion?		
7. Is the ammunition/weapons stowed in accordance with the magazine's stow plan and in such a manner to be covered by the sprinklers to the maximum extent possible?		
8. Is the magazine's ammunition handling equipment within weight test?		

Figure 6-3-2. Aviation Ordnance Safety Assessment (AOSA) Checklist

AOSA Checklist - contd.

9. Are the multiple stows of ammunition compatible as per OP 4 and the stowage plan posted in the magazine?		
10. Are the air hoist line lubricators and moisture traps properly serviced?		
11. Are all magazine/lockers kept scrupulously clean and in good material condition?		
12. Does the AWMCS/weapons officer control the handling and movement of the ammunition?		
13. Prior to ordnance evolutions, are the jettison ramps rigged and inspected?		
14. Are avenues of movement established and maintained by the weapons department?		
15. Is the flight deck crew knowledgeable on activation of the deluge system in the staging area?		
16. Is there communication established between the flight deck, hangar deck magazines, and AWMCS during ordnance evolutions?		
17. Are all ordnance personnel wearing safety shoes?		
18. Are EOD personnel available, as required?		
19. Are the elevators marked “Keep OFF this elevator while in operation” in a conspicuous location at all levels?		
20. Are operating instructions for each elevator/hoist posted at each level?		
21. Are the operating instructions for each elevator indicating the safe working load (SWL)?		
22. Are communications available at all levels and in use while operating the elevator?		
23. Are the bomb assembly table, air hoses, and reels in good operating condition?		
24. Are the proper assembly tools available and serviceable?		
25. Are the beam, carriers, and air hoists marked with safe working load and weight test date?		
26. Are the current NAVAIR assembly checklist/publications available and used during weapons build-up?		
27. Are assembly/transfer area boundaries posted and secured to casual traffic?		
28. Are dunnage and trash removed as required from the assembly area?		
29. Is the flow of handling equipment, components, and assembled weapons organized?		
30. Is a quality assurance inspection performed on each weapon?		
31. During the various stages of assembly are QA inspections conducted?		

Figure 6-3-2. Aviation Ordnance Safety Assessment (AOSA) Checklist - contd.

Ship's AOSA Assessment Checklist (flight deck)

RELEASE AND CONTROL CHECKS ON AIRCRAFT: Has the organization's aviation ordnance safety supervisor ensured that the following has been completed?	**YES**	**NO**
1. Have the NAVAIR airborne weapons/stores loading manual/checklist been verified with the current NAVAIR 01-700?		
2. Are cartridges removed from the aircraft?		
3. Is the aircraft properly configured?		
4. Is the aircraft properly grounded?		
5. Are the proper NAVAIR release and control checklists being used during checks?		
6. Is the proper test equipment utilized and calibrated?		
LOADING OF AIRCRAFT: Has the organization ordnance safety supervisor ensured that the following was completed?	**YES**	**NO**
1. Is there a sufficient amount of qualified ordnance personnel present?		
2. Are all ordnance loading personnel familiar with the location of the jettison ramps?		
3. Is there a designated safety observer present?		
4. Is the crew leader directing the aircraft loading?		
5. Is the proper NAVAIR loading checklist being used?		
6. Was the weapon/store inspected prior to loading?		
7. Was a postload quality assurance inspection performed after the load evolution?		
8. Is a store(s) loading sign installed in the cockpit after loading in accordance with NAVAIR loading checklist?		
9. Was the proper firefighting equipment available and manned?		
ARMING/REARMING AREA:	**YES**	**NO**
1. Is the aircraft properly positioned?		
2. Are current arming/safety signals used in accordance with the NAVAIR Loading Manual?		
3. Are stray voltage checks performed, if required?		
4. Are the electrical connections made prior to removal of safety pins?		
5. Were safety pins installed/removed and safety levers actuated in proper sequence?		
6. Were missile dome cover(s) installed prior to engine shut down?		
DOWNLOADING OF AIRCRAFT: Has the organization's ordnance safety supervisor ensured that the following was completed?	**YES**	**NO**
1. Is the aircraft properly grounded?		
2. Is there a sufficient amount of qualified ordnance personnel present to perform the task?		
3. Is the proper NAVAIR loading checklist being used?		
4. Is there a designated safety observer present?		
5. Was the proper firefighting equipment available and manned?		
DISASSEMBLY/STOWGE/DISPOSAL:	**YES**	**NO**
1. Were the weapons broken down in accordance with the proper NAVAIR technical manual?		
2. Were the weapons/ammunition properly repacked in original containers and re-palletized as required in accordance with current directives?		
3. Is unserviceable ammunition disposed of in accordance with current directives?		

Figure 6-3-2. Aviation Ordnance Safety Assessment (AOSA) Checklist - contd.

6.3.7 Explosive Ordnance Disposal. Navy Explosive Ordnance Disposal (EOD) support shall be requested by the ship in accordance with current Instructions and U.S. Fleet Forces or Pacific Fleet guidance. Navy EOD support shall be requested no later than 180 days prior to the scheduled deployment and no later than 60 days prior to refresher training. EOD requirements are defined in NAVAIR 00-80T-106 and OPNAVINST 8027.6.

6.3.8 Ammunition Allowance and Ordnance Requisitioning and Issue.

6.3.8.1 For detailed information on the allowance list of LFORM, mission load allowance, and other contingency material to be carried aboard amphibious warfare ships, refer to the Naval Supply Systems Command Global Logistics Support (NAVSUP GLS AMMO) Ordnance Information System (OIS) for your allowance and COMNAVSURFORINST 4080.1, COMMARFORCOM Order 4000.10, or COMMARFORPAC Order 4080.2 joint publication for policy.

6.3.8.2 For detailed information on the requisitioning of ammunition, follow up procedures, and Ammunition Transaction Report (ATR) guidelines, refer to NAVSUP P-724.

6.3.9 Handling and Stowage. The ordnance stowage capabilities and handling procedures aboard aviation amphibious ships vary greatly from one class to another and would require a complete and separate technical manual to adequately cover all aspects of the ordnance handling and stowage procedures for each class ship. For specific details refer to NAVSEA OP 4.

6.3.10 Weapons Replenishment.

6.3.10.1 Replenishment at sea is referred to as underway replenishment and is accomplished by two basic methods: Connected Replenishment (CONREP) and Vertical Replenishment (VERTREP).

6.3.10.2 CONREP is defined as the transfer of cargo between ships, while underway, by means of cables connected from one ship to another.

6.3.10.3 VERTREP is defined as the transfer of cargo between ships using helicopters. VERTREP is often used to supplement connected replenishment. Weapons loads, generally limited to 4,000 pounds, are transferred from the supply ship to the flight deck of the amphibious ship. The advantage of a VERTREP is that it can effect replenishment without ship-to-ship connection.

6.3.11 Intermediate Level Maintenance.

6.3.11.1 Intermediate level (I-level) maintenance aboard LHA and LHD ships represent a primary function of the ship. Generally, it includes I-level testing, maintenance, and repair of all aviation support equipment.

6.3.11.2 The aircraft I-level maintenance department provides support facilities, technical assistance, maintenance, and repair of aircraft gun systems, armament equipment, and armament systems components.

6.3.11.3 Aircraft I-level maintenance department functions on LPD ships are limited and specific capabilities are normally regulated by the TYCOM.

6.3.12 Armament Weapons Support Equipment (AWSE). AWSE used in support of ordnance handling evolutions aboard amphibious ships will be maintained in accordance with Volume II, Section 8 of this manual.

6.3.13 Assembly and Disassembly.

6.3.13.1 Due to the inherent dangers involved, the assembly and disassembly of Aviation Ordnance shall be closely controlled. All weapons unpacking, assembly, and disassembly shall be done in accordance with NAVSEA OP 4, NAVSEA OP 3565/NAVAIR 16-1-529, the appropriate checklist, and applicable Naval Air Systems Command (NAVAIRSYSCOM) technical manuals. All evolutions shall be conducted only in an approved assembly area. Refer to NAVSEA SG 420-B5-WHS-010 for designated assembly, disassembly, and staging areas on board the different class amphibious ships.

6.3.13.2 The assembly and disassembly areas shall be maintained as an RF-free environment whenever ordnance is assembled or disassembled. The act of assembly/disassembly of ordnance can cause HERO SAFE ORDNANCE to become HERO SUSCEPTIBLE or even HERO UNSAFE. The Officer in Charge (OIC) of the evolution shall request that the Operations Officer set the appropriate EMCON condition prior to exposing ordnance containing EIDs to a radio frequency environment.

6.3.13.3 The ship's Weapons Department shall maintain technical manuals for each type of ordnance material and weapons support equipment on board.

6.3.14 Aircraft Loading and Downloading.

6.3.14.1 All aircraft loading and downloading evolutions shall be conducted in accordance with the applicable weapons loading manuals and checklists, the LHA/LHD NATOPS manual (Shipboard Helicopter Operating Procedures). Only those personnel who are qualified and certified in accordance with OPNAVINST 8020.14/MCO P8020.11 shall be allowed to participate in aircraft ordnance loading or downloading or other ordnance evolutions.

6.3.14.2 Compliance with weapons requirements contained in the ordnance load plan demands close coordination between the Aircraft Handling Officer, ship's Weapons Officer, ACE Ordnance Officer, and the squadron Maintenance Liaison Officer. The ACE Ordnance Officer is responsible for advising the squadron Maintenance Liaison Officer as early as possible of any special requirements or considerations which apply to the loading of selected aircraft. The Maintenance Liaison Officer shall ensure that the Aircraft Handling Officer is apprised of any peculiarities in special requirements, configuration, or status which may render certain aircraft unassignable for particular types of weapons loads.

6.3.14.3 The Aircraft Handling Officer shall provide ACE Ordnance Officer with the planned deck spot as early as possible to afford adequate time to properly configure the aircraft and to perform release and control systems checks in accordance with the applicable weapons release and control checklist.

6.3.14.4 The loading and downloading of ordnance on aircraft in the high tempo environment on board air-capable ships dictates strict and absolute adherence to all prescribed safety precautions, warnings, and notices. Prior to loading and downloading ordnance on aircraft, all ordnance personnel shall be thoroughly familiar with those warnings, notes, and restrictions contained in NAVAIR 00-80T-106 and NAVSEA OP 3347.

6.3.15 Aircraft Arming and Dearming. Weapons arming and dearming shall be conducted only in designated areas. Aircraft shall be pointed in a safe direction. Arming and dearming shall be performed by qualified and certified personnel, under the direct control of an arming and dearming supervisor, utilizing the appropriate weapons loading checklist and the proper arming and dearming hand signals contained in the LHA/LHD NATOPS manual and Volume II, Chapter 6.1 of this manual.

6.3.16 Recovery of Hung and Unexpended Ordnance.

6.3.16.1 Vertical and short takeoff aircraft landing with hung ordnance shall be safed as soon as practical after landing. Helicopters shall be dearmed prior to installing tiedown chains.

6.3.16.1.1 Aircraft landing with unexpended ordnance shall be safed as per paragraph 6.3.15.

CHAPTER 6.4

Conventional Weapons Handling Procedures Afloat (AE, AO, and AOE) Combat Logistics Force Ships (Ammunition Ships)

Table of Contents

Paragraph	Subject	Page
6.4.1	General	6-4-1
6.4.2	Responsibilities	6-4-1
6.4.3	Material Handling Equipment	6-4-4
6.4.4	Transporting Equipment	6-4-4
6.4.5	Dunnage Systems	6-4-4
6.4.6	Pier Loadout	6-4-5
6.4.7	Underway Replenishment (UNREP)	6-4-6
6.4.8	Underway Transfer of Ammunition	6-4-8
6.4.9	Vertical Replenishment (VERTREP)	6-4-20

List of Illustrations

Figure	Title	Page
6-4-1	Ordnance UNREP Checkoff List	6-4-2
6-4-2	Deck Department Replenishment Checkoff List	6-4-11
6-4-3	Engineering Department Replenishment Checkoff List	6-4-12
6-4-4	Supply Department Replenishment Checkoff List	6-4-13
6-4-5	Night Replenishment Checkoff List	6-4-14
6-4-6	Missile/Cargo STREAM Replenishment Checkoff List	6-4-15
6-4-7	Housefall Station Replenishment Checkoff List	6-4-16
6-4-8	Burton Station Replenishment Checkoff List	6-4-17
6-4-9	Bridge Replenishment Checkoff List	6-4-18
6-4-10	VERTREP Replenishment Checkoff List	6-4-22

CHAPTER 6.4

Conventional Weapons Handling Procedures Afloat (AE, AO, and AOE) Combat Logistics Force Ships (Ammunition Ships)

6.4.1 General.

6.4.1.1 Three classes of ships, AE, AO, and AOE, are part of the combat logistics force which provide ordnance and ammunition logistics support to underway Fleet combat forces. This interface enables Fleet units to maintain their readiness posture at the desired level through a sustained period.

6.4.1.2 This chapter provides information that will aid in the safe, efficient handling of explosives and the standardization of procedures which provides guidance for ammunition ships personnel involved in pier onload and offload, stowage, movement, Underway Replenishment (UNREP), and underway combatant download.

6.4.2 Responsibilities.

6.4.2.1 The First Lieutenant shall:

a. Have overall responsibility for the direction of all ammunition handling evolutions.

b. Inform the Officer of the Deck when the deck department is ready for UNREP.

c. Keep the Commanding Officer, Executive Officer, and the Officer of the deck informed regarding progress and estimated time of completion of ammunition handling evolutions.

d. Furnish qualified rig teams for all UNREP stations.

6.4.2.2 The Cargo Ordnance Officer shall:

a. Supervise the ammunition handling evolutions under the direction of the First Lieutenant and make detailed assignments of personnel to special responsibilities during ammunition handling.

b. Promulgate the ammunition handling notice.

c. Ensure that safety precautions are promulgated and that all personnel involved are informed regarding proper ammunition handling techniques.

d. Ensure the ordnance UNREP checklist (Figure 6-4-1) is completed.

e. Ensure proper stowage and security of ammunition.

f. Direct the movement of ammunition.

g. Estimate evolution completion times.

h. Provide forklift drivers that are properly qualified and certified and possess explosives driver's licenses.

i. Provide roving patrol when ammunition is staged and out of the magazine.

ORDNANCE
UNREP CHECKOFF LIST

UNREP SHIP _____
TIME/DATE _____
STATIONS _____
NUMBER OF PALLETS _____
VERTREP _____

48 HOURS PRIOR

Plan of the day notice for work parties _____
Identify slings required _____
Ordnance requirements coordinated with Supply and Operations Officer _____

24 HOURS PRIOR

Advise damage control assistant via Chief Engineer of type ammunition to be transferred or received and hose teams required _____

12-6 HOURS PRIOR

Brief flight deck control _____
Brief flight deck Officer _____
Advise air boss if VERTREP _____
Arrange refreshments _____

6-2 HOURS PRIOR

Forklifts _____
Electrics charged - magazine on deck _____
Diesels tested, watered, oil tested (Supply) _____
All forklifts spotted - include flight deck assigned crew _____
Get magazine count - stowage compatibility brief supervisors _____
(A) Ammo flow and staging including VERTREP _____
(B) Forklift failure procedures _____
(C) Elevator equipment procedure _____

2-1 HOURS PRIOR

Handling crew _____
Lifts belts, gloves, tools, and band cutters _____
Forklifts staged _____

Figure 6-4-1. Ordnance UNREP Checkoff List

6.4.2.3 The Supply Officer shall:

a. Ensure proper accounting and reporting of all ammunition transactions.

b. Provide ammunition checkers at appropriate UNREP stations.

c. Provide forklift drivers with an explosives license when requested.

d. Ensure flexibility of meal hours is maintained to feed UNREP personnel.

6.4.2.4 The Chief Engineer shall:

a. Ensure fire hoses are extended and charged in accordance with Naval Warfare Publication (NWP) 401.4.

b. Ensure electric or diesel forklifts, three dimensional forklifts, and ammunition elevators are ready for use.

c. Ensure qualified personnel are readily available to repair forklifts, charge batteries, and keep ammunition elevators in operation.

d. Provide helicopter fire party during Vertical Replenishment (VERTREP).

6.4.2.5 The Operations Officer shall:

a. Provide UNREP planning conference briefings.

b. Ensure that electronics emission conditions meet safety requirements for ammunition UNREP in accordance with NAVSEA OP 3565/NAVAIR 16-1-529 and NAVSEA 59571-AA-MMA-00.

6.4.2.6 The Communications Officer shall:

a. Provide radio and/or flag hoist communication with the customer ship during UNREP.

b. Provide hand-held walkie-talkies to appropriate stations and personnel during UNREP.

c. Secure all nonessential transmitters during ammunition UNREP.

6.4.2.7 The Air Officer (when embarked) shall:

a. Ensure the flight deck is ready for VERTREP.

b. Ensure the tower and flight deck are appropriately manned.

c. Ensure helicopters are ready for VERTREP.

d. Provide landing signal, chain, chock, and pale pendent hookup personnel.

6.4.2.8 The Medical Officer shall:

a. Be prepared to receive possible casualties.

b. Provide Navy Corpsmen as required.

6.4.2.9 The administrative division shall:

a. Provide phone talkers on the bridge.

b. Provide master-at-arms to patrol the ship during the evolution to keep nonessential personnel clear of ammunition handling areas and enforce no smoking regulations.

6.4.2.10 Safety Supervisors. Officers or Senior Petty Officers shall be assigned as Safety Supervisors during UNREP evolutions at designated transfer stations.

6.4.2.11 Supervisory Petty Officer. Cargo Ordnance Department Petty Officers shall direct the flow of ammunition and ensure proper stowage and securing of ammunition and handling equipment.

6.4.2.12 Ammunition roving watch shall check for the following:

a. Unauthorized smoking.

b. Personnel tampering with staged ammunition.

c. Proper fire hoses are charged.

d. Leaks in hoses.

e. Leaks at fire stations.

f. Oil leaks from equipment in the vicinity of the staged ammunition.

g. Unauthorized personnel in ammunition staging areas.

h. Report to the Officer of the Day, every half hour, the status and security of the staging areas.

6.4.2.13 The Explosive Ordnance Disposal (EOD) Officer shall:

a. Ensure two members of the EOD team are present in the cargo handling area during all ammunition resupply operations.

b. During VERTREP of ammunition position, one EOD member on the flight deck.

6.4.3 Material Handling Equipment.

6.4.3.1 Material handling equipment is that equipment required to transport, handle, or transfer explosives or explosive components carried on board ammunition ships. Information contained in this paragraph is intended as a supplement to existing technical manuals, not as a substitute. A comprehensive listing of approved handling equipment for weapons can be found in NAVSEA OP 2173. A specialized list of weapons handling equipment required to handle Fleet issue unit loads during pier, shipboard, Connected Replenishment (CONREP) and VERTREP evolutions can be found in NAVSEA OP 3206.

6.4.3.2 Handling equipment must be maintained at the optimum level of repair and weight tested at established industrial activities in accordance with applicable maintenance requirement cards and technical manuals. If extensive maintenance or repair are required, refer to NAVSEA OP 3206 for applicable equipment operating procedures.

6.4.4 Transporting Equipment. Transporting equipment includes the various types of trucks used to transport the ordnance carried on board ammunition ships to and from stowage. The trucks fall into the following categories: forklift, pallet lift, handlift, and hand truck. For details relating to description, operation, application, and preventive maintenance on the trucks, refer to NAVSEA OP 3206. Similar information on guided missile handling equipment, mine handling equipment, and equipment used to transport Fleet issue unit load configurations can be found in NAVSEA OP 3206.

6.4.5 Dunnage Systems. The dunnage systems employed by ammunition ships consist of two basic types: metal (athwartships and diagonal) and wire net. For application of these systems

to the different classes of ammunition ships, general installation techniques, and special configurations for unique loads, refer to NAVSEA OP 3206.

6.4.6 Pier Loadout.

6.4.6.1 Planning and Coordination. Planning, prior to a pier loadout operation, ensures proper loading of the ammunition ship and an orderly transfer of ammunition between the ship and the ordnance facility. Ammunition ships are loaded in accordance with a specific cargo load plan that shows the location of each item of ammunition. The plan is developed by personnel at the ordnance facilities at Earle, NJ, and Indian Island, WA. Upon request from higher authority, personnel from these activities will visit the ammunition ship, prior to pier loadout, and formulate the cargo plan, using the replenishment schedule as a guide. There is some flexibility in the plan to accommodate possible changes in the replenishment schedule.

6.4.6.2 Cargo Stowage. Representatives from both the ammunition ship and the ordnance facility determine the final stowage of ammunition at a preloading conference. They must consider the following items:

a. Designated deckloading capacity of the ship.

b. Cubic volume and weight of ammunition items.

c. Distribution of ammunition for proper trim and stability at sea as scheduled transfers are made.

d. Provisions for adequate, clear working spaces within the holds.

e. Safe location of ammunition in relation to the ship's vulnerability to mine or collision damage.

f. Metal dunnage system usage requirements.

g. Explosive compatibility of ordnance material.

6.4.6.3 Ammunition Loading. The ordnance facility does the loading; however, the ship's Commanding Officer retains the final responsibility for ensuring that his/her ship is properly loaded within its designed capabilities. Loading procedures must comply with NAVSEA OP 3206 and must be in accordance with NAVSEA OP 4 and U.S. Coast Guard, Code of Federal Regulations 46 CFR, Part 146 (Transportation or Storage of Military Explosives). Except as authorized by the Chief of Naval Operations (CNO), deviations from the requirements of 46 CFR, Part 146, are not permitted. Should a situation arise in which it appears to be infeasible to meet the requirements of 46 CFR, Part 146, a request for waiver of the specific requirements may be submitted to the CNO (N411) via the Naval Sea Systems Command (NAVSEASYSCOM). This policy, as currently set forth in OPNAVINST 8020.14/MCO P8020.11, is not to be construed to interfere with the Commanding Officer of any ship, that transports military explosives, to take emergency action for the safety of his/her ship, or to meet any military emergency. Should such emergency action result in the deviation of the requirements of 46 CFR, Part 146, the deviation shall be reported to the CNO (N411) at the earliest opportunity.

6.4.6.4 Equipment Required. Ammunition ships are equipped with loading gear, such as 10-ton cargo booms and 5-ton cranes, making the use of pier cranes optional for loading operations.

However, loading can be expedited through the use of pier and floating cranes. The following handling equipment is required:

a. Pallet sling MK 93 MOD 0 or pallet hoisting sling MK 70 MODs 1 and 2.

b. Pallet sling MK 123 MOD 0.

c. Electric forktrucks, 4,000-pound capacity, with a minimum 28-inch spacing between the forklift tines (inside dimensions).

d. Pallet lift truck, 4,000-pound capacity.

e. In addition to the above handling equipment, the following items are also required: additional metal stanchions must be available for the stowage of unit loads in areas where metal dunnage is used; lashing gear and tomming gear; and wood dunnage. Refer to NAVSEA OP 3206 for detailed descriptions of the items.

6.4.6.5 Preliminary Operations. The following procedures should be used in preparing the ammunition ship for receiving fleet issue unit loads of ammunition from dockside:

a. Mate the port and starboard sections of the elevators to be used (AE 21/23 class ships).

b. Clear the area between the elevator to be used and the side of the ship nearest the dock of all material and equipment not necessary to the operation.

c. Review the stowage plan to determine the holds and levels where loads are to be stowed.

d. Establish phone communication between the personnel in the holds and the main deck area.

e. Position the dock crane (if used) and transportation conveyance adjacent to holds to be loaded.

f. Ensure the proper emission control condition is set.

g. Ensure firefighting equipment is made available in accordance with NAVSEA OP 4 and NAVSEA OP 3317.

6.4.6.6 Stowage Operation. Fleet issue unit loads of conventional weapons are hoisted aboard the ship and lowered to the predetermined hold or level via elevator. From there the loads are transported to the prescribed stowage area and secured.

6.4.6.7 Pier Offload. The ammunition ship may have to offload unit loads of conventional weapons considered to be non-serviceable due to age, damage, etc. The operation is essentially the reverse of loadout.

6.4.7 Underway Replenishment (UNREP).

6.4.7.1 Objectives of Replenishment. In order to carry out the Navy's mission, Fleet units must be capable of remaining at sea for prolonged periods, fully armed and ready to carry out any assigned task. To accomplish this objective, the Navy transports munitions loaded on ammunition ships to safe areas in the theater and shuttles the ammunition, as required, to combatants in the task force. The Fleet combatants receive resupply of ammunition by means of an UNREP. An UNREP is a transfer of a commodity between two ships while underway. Two methods of

transfer are employed: horizontal transfer via CONREP rigs and vertical transfer via helicopter VERTREP. The goal of an UNREP is the safe delivery of the maximum amount of munitions in the minimum amount of time. An UNREP must be accomplished in such a manner that it does not interfere with the primary mission of the supported force. For detailed instructions on all aspects of replenishment at sea, refer to NWP 401.4. For transfers between ships of the North Atlantic Treaty Organization (NATO) nations, see Allied Technical Publication (ATP) 16D.

6.4.7.2 Organization and Command.

6.4.7.2.1 Officer in Tactical Command. The Officer in Tactical Command is the Senior Commander of the UNREP force and the supported force and is responsible for the proper execution of the entire replenishment operation.

6.4.7.2.2 UNREP Force Commander. The UNREP Force Commander is the Senior Commander or Commanding Officer of the replenishment ship. The UNREP Force Commander is authorized the direct liaison with the supported Force Commander and is responsible for:

a. Consolidating munitions prior to replenishment.

b. Recommending to the Officer in Tactical Command a replenishment course and speed for optimum replenishment conditions. The UNREP Force Commander shall advise the Officer in Tactical Command of any unusual limitations or characteristics of the replenishment ship which might affect the replenishment or influence the order alongside.

c. Exercising responsibility for the movement of the replenishment ship en route to the rendezvous area and initiating movement reports as necessary.

d. Ensuring passage through the designated rendezvous point on time. After contact with the supported force has been established, the UNREP Force Commander may alter his/her course and speed (unless otherwise directed by the Officer in Tactical Command) to facilitate rendezvous.

6.4.7.2.3 Supported Force Commander. The Supported Force Commander is the Senior Commander or Commanding Officer of the ship to be replenished. The Supported Force Commander is responsible for:

a. Selecting and promulgating rendezvous time and place.

b. Ensuring the submission of requirements as far in advance as possible.

c. Issuing the order alongside.

6.4.7.3 Replenishment Conference. A replenishment conference is an excellent means of improving the performance of units participating in an UNREP. When a conference can be held, it may be possible to develop a customized plan for a particular UNREP. Particular items which are particularly worthy of discussion are the types and number of rigs to be used; requirements and submission of requirements; and use of experimental rigs, equipment, and techniques.

6.4.7.4 Planning. The overall efficiency of an UNREP is directly proportional to the thoroughness of planning. Even in the case of a small UNREP, thorough planning is required. Transfer

rate, breakout problems, rigs, and emission control condition are factors which must be considered when planning an UNREP. To minimize time alongside, plan combinations of CONREP and VERTREP, emphasizing the most efficient method or combination of methods of transfer. Figures located in NWP 401.4 are excellent aids for use in the planning of UNREP operations.

6.4.8 Underway Transfer of Ammunition.

6.4.8.1 Basic Consideration. The transfer of ammunition at sea is the most exacting and hazardous of all replenishment operations. The greatest of care must be taken to avoid accidents which could result in the destruction of both the ammunition ship and the ship(s) alongside. Great emphasis must be placed on the safe and expeditious handling of munitions.

6.4.8.2 Personnel Requirements. Personnel engaged in the transfer of ammunition shall be qualified and certified and shall observe all safety precautions while handling explosives. They must also be thoroughly familiar with the methods used and their limitations. NAVSEA OP 3347 and NAVSEA OP 4 contain safety precautions and handling procedures applicable to ammunition. Because various types of mobile and nonmobile handling equipment are used in transferring ammunition, personnel who work with handling equipment should be familiar with NAVSEA OP 2173. It is of particular importance that care be used when handling new types of ammunition. Technical developments, especially in missiles, lead to new transfer methods and handling equipment. Personnel must master new techniques in handling ammunition and missiles to achieve safe and expeditious transfers.

6.4.8.3 Characteristics of Ammunition Ships (AE, AO, AOE). Ammunition ships are specifically designed to transport and transfer ammunition. Their holds are sheathed, ventilated, and provided with sprinklers for ammunition safety. Some ships have VERTREP facilities and certain classes are equipped to transfer fuel and provisions as well as ammunition. Normal replenishment speed for ammunition ships, when transferring ammunition, is 12 to 16 knots. Fast combat support ships (AOEs) and major combatants can transfer ammunition at higher speeds when weather and sea conditions permit. The replenishment speed will be promulgated by the officer in tactical command. For data on transfer stations and capabilities of ships, refer to the following:

a. UNREP Stations Capabilities Handbook NAVSHIPS 0905-487-2010.

b. Fleet Underway Replenishment Guide, COMNAVSURFPACINST 3180.2E or COMNAVSURFLANTINST 9010.1G.

c. Fleet and Type Commander directives.

6.4.8.4 Special Handling Equipment. Ammunition, missiles, and components require special handling equipment for intership transfer because of the large weight and size of the load and because missiles and components are easily damaged during handling. For information on UNREP hardware and equipment, refer to NAVSEA S9570-AD-CAT-101.

6.4.8.5 Palletized Ordnance. Conventional ammunition is normally transferred on pallets in Fleet issue unit loads. Transfer of palletized ordnance requires the use of special slings. For data on the configurations of palletized ordnance unit loads that have been authorized for transfer at sea, refer to MIL-STD 1323 drawings and NAVSEA OP 3206. Ammunition ships carry pallet trucks for use by receiving ships in clearing pallets from landing areas.

6.4.8.6 Preparing Missiles and Boosters. Missiles and boosters are normally transferred either in their containers or in the MK 6 dolly. The receiving ship's strikedown system dictates the choice of container or dolly. NAVSEA OP 3192 and NAVSEA OP 3206 contain procedures for loading and unloading missiles and boosters into and from the MK 6 missile transfer dollies. Missile components are normally transferred on pallets. MK 45 handlift trucks are available on the ammunition ship for use by the receiving ship if desired. The receiving ship shall provide the information in paragraph 6.4.8.7 to the delivery ship.

6.4.8.7 Exchange of Information. After the replenishment schedule has been determined, the following information shall be exchanged:

a. Commodity identification by type, quantity, and Naval Ammunition Logistics Code (NALC) required at each station.

b. Order of transfer of missiles and boosters.

c. Direction that missiles and boosters should face during transfer as dictated by receiving ship's strikedown system.

d. Need to receive partial pallet loads of ammunition if full pallets cannot be handled.

e. Requirements for special handling equipment to expedite strikedown.

f. Missile Return Arrangements. When the receiving ship plans to return missiles, it shall advise the delivery ship of:

(1) Number and type of missiles.

(2) Sequence of transfer cycle: before receiving new missiles or alternately receiving and returning missiles.

(3) Handling equipment requirements.

g. The delivery ship shall advise the receiving ship on the following items:

(1) Transfer stations to be used.

(2) Transfer rigs to be used.

(3) Breakaway procedures to be used when transfers are complete.

(4) Any required deviations from the receiving ship's desired plan.

6.4.8.8 Invoices. Ammunition transfers at sea are normally accompanied by itemized invoices. The receiving ship checks and signs the original invoices and returns them to the delivery ship in the last transfer. If time does not permit this, return them by guard mail or regular mail as soon as possible.

6.4.8.9 Report. It is the delivery ship's responsibility to prepare and submit reports required for the loss or damage of ammunition during transfer; this responsibility is transferred to the receiving ship when the ammunition safely reaches its deck.

6.4.8.10 Preparing Ships for Transfer. Most of the preparation required by the delivery and the receiving ship for the transfer of ammunition is contained in NWP 14. The common

preparations in NWP 14 also apply. Refer to NWP 14, for the list of rigs, in order of preference, the basis for selecting the rigs, and information on preparing transfer stations on the delivery and receiving ships. The checkoff lists of Figures 6-4-2 through 6-4-9 should be completed to ensure that all necessary equipment is available, transfer stations are properly rigged, and required personnel are available and aware of their duties. Give specific attention to the following preparations:

a. Limit breakout of ordnance, prior to the replenishment operation, to that required to preclude a significant reduction in the transfer rate.

b. Both ships provide wedges, chocks, and preventers to preclude rolling and shifting of ammunition on deck.

c. Cover the landing area with rubber matting when bare ammunition is to be transferred.

d. The receiving ship's plan must provide for keeping the landing area clear for arriving ammunition and for expediting strikedown.

e. Ensure the receiving ship has adequate special handling equipment, i.e., MK 45 handlift truck and pallet trucks. If not, it should request the delivery ship to transfer the equipment at the beginning of the evolution. The receiving ship must return all borrowed special handling equipment to the delivery ship when the operation is complete.

6.4.8.11 Load Limitations. The following requirements must be strictly followed:

a. Loads for transfer must meet the requirements for the transfer rig used and for the type of ammunition or missile to be transferred.

b. Safe transfer loads and load limitations established by the NAVSEASYSCOM for the transfer method used.

c. Types of loads, weight limitations, and handling equipment prescribed in NAVSEA OP 3206 for the transfer of ammunition and missiles.

d. Limit loads for transfer to those that can be safely handled under existing conditions. Commanding Officers should reduce loads below the permissible maximums during adverse conditions.

6.4.8.12 Test Loads. Prior to transfer of any type of ammunition, test the rigs by cycling a dummy load. The weight of the dummy load must be equal to or greater than the weight of the heaviest loads to be transferred.

6.4.8.13 Handling and Transfer Procedures. Useful sources of information on the transfer of ammunition and missiles are NAVSEA OP 3206, NWP 401.4, MIL-STD 1326, and NAVSEA S9570-AA-MMA-010. The following procedures apply to transfer of ammunition and missiles:

a. Use mechanical handling and strikedown equipment, such as roller conveyors and slides, whenever available.

b. Transfer missiles and missile components simultaneously so that if the operation is interrupted, missiles that are already on the combatants will be complete for operational purposes.

1. Receive and review all station checkoff lists. _____
2. Check each station to see that it is properly rigged for the method of transfer. _____
3. Check the distance line for proper length and markings. _____
4. Ensure that any required handling equipment is in place, operating, and manned. _____
5. See that any required carriers are on-station (such as cargo nets, skip boxes, transfer-at-sea chair or transfer bags). _____
6. Start, warm up, and test winches. _____
7. Ensure that the brake is set on the cargo boom's topping lift winch, and the winch pawl is engaged. If winch is not equipped with a pawl, attach a preventer stopper to the topping lift wire (as appropriate). _____
8. Rig the proper station markers. _____
9. Have two bolos and one line-throwing gun ready for use at each station to be used. Test line-throwing gun and examine firing pin. Have extra projectiles and shot lines on-hand. _____
10. Prepare and test sound-powered phones. _____
11. Have all men on-station in prescribed uniform with life jackets, hard hats, and other special clothing as required. _____
12. Rig in movable equipment and fittings that project over the engaged side and are not required during the replenishment (that is, lifeboats and sea painter). _____
13. Test lifeboat engines. Ready lifeboat for lowering. _____
14. Have movies, Fleet freight, and mail ready for immediate transfer. _____
15. Have all specified rigs ready for use. _____
16. In freezing weather, have sand available for use on icy areas. Whenever practicable, remove ice from working areas prior to replenishment. _____
17. Have repair and emergency tools on-station and ready for use. _____
18. Make readiness report to Officer of the Deck. _____

Remarks:

Figure 6-4-2. Deck Department Replenishment Checkoff List

1. Light off additional boilers, as necessary. _____
2. Put generators on the line, as required. _____
3. Warm up all deck machinery. _____
4. Maintain fire-main pressure at 100 psi. _____
5. Lead out and inspect necessary firefighting equipment. _____
6. Check all sound-powered phones and circuits that will be used, both intership and intraship. _____
7. Warm steam cargo pumps. Test all pumps, including electrical. Recirculate oil. _____
8. Make readiness report to Officer of the Deck. _____
9. Set restricted maneuvering conditions, when directed. _____

Remarks:

Figure 6-4-3. Engineering Department Replenishment Checkoff List

1. Receive or send requisitions, ration items in short supply, and prepare hatch check sheets. _____
2. Conduct prereplenishment conference to disseminate information to checker, Hatch Officers, and leading Petty Officers. _____
3. Prestage number of net loads at each transfer station. _____
4. Predesignate deck space that will be used for transfer, and label the space accordingly. _____
5. Man replenishment-at-sea detail when called away. Man phone talker stations, status boards, and supervisor stations. _____
6. Furnish checkers for cargo transferred and received at each station. _____
7. Prepare cargo scheduled for transfer. _____
8. Record water cuts, ullage gauges, and temperature of tanks before and after. _____
9. Make readiness report to Officer of the Deck. _____

Remarks:

Figure 6-4-4. Supply Department Replenishment Checkoff List

Night Replenishment Station #_____

(Petty Officer in charge of station will complete this checkoff list in addition to the station checkoff list required for day replenishment.)

1. Have at least two chemical light wand illuminated shot line projectiles on hand for each ship expected alongside. _____
2. Test batteries and bulbs in all flashlights. _____
3. Ensure that a green chemical light or one-cell white flashlight and a whistle are attached to each life jacket in use. _____
4. Have station marker light box properly prepared. Show correct commodity for transfer. _____
5. Have obstructions, fittings, and attachment points marked with red chemical lights or one-cell and flashlights. _____
6. Have appropriate colored-lens flashlights or wands available for hand signals. _____
7. Mark each messenger line with canvas tags. _____
8. Rig distance-line illumination. _____
9. Rig lifeline illumination. _____
10. Illuminate working station lighting. _____
11. Ensure approach and station lights have been tested. _____

Remarks:

Figure 6-4-5. Night Replenishment Checkoff List

Missile/Cargo STREAM Station #_____

(For night replenishment, note supplemental checkoff list.)

1. Ensure that wires are free of kinks and are spooled on the drum with no riding turns. Additionally, ensure that winch clutches are engaged and that clutch engaging levers are secured in place with toggle pins. _____
2. Test winches and sliding block in accordance with approved procedures. _____
3. Ensure that trolley, cargo drop reel, cargo hook, messenger-rigged SURF Traveling Actuated Remotely (STAR), traveling Standard Underway Replenishment Fixture (SURF), and Standard Tension Replenishment Alongside Method (STREAM) manila or burton out haul are properly rigged. _____
4. Ensure that inhaul is in tension mode. _____
5. Check pelican hook for ease of operation and presence of cotter pin. _____
6. Ensure that the messenger is faked down for running and properly attached to the rig. _____
7. Have line-throwing gun and one bolo at each station to be used. Test line-throwing gun and examine firing pin. Have extra projectiles and shot lines on-hand. _____
8. Rig station marker. _____
9. Have signal paddles available. _____
10. Fake down phone line and test phone. _____
11. Have required station and emergency tools available. _____
12. Have cargo nets, net shorteners, skip box, and transfer bag available, as required. _____
13. Muster men assigned. _____
14. Make readiness report to First Lieutenant. _____

Remarks:

Figure 6-4-6. Missile/Cargo STREAM Replenishment Checkoff List

Housefall Station #_____

(For night replenishment, note supplemental checkoff list.)

1. Ensure that wires are free of kinks and are spooled on the drum with no riding turns. Additionally ensure that winch clutches are engaged and that clutch engaging levers are secured in place with toggle pins. _____
2. Ensure that trolley block is properly installed (modified housefall rig). _____
3. Check operating cargo hook. _____
4. Have all swivels free and well lubricated. _____
5. Have all shackles properly secured. _____
6. Check pelican hook for ease of operation and presence of cotter pin. _____
7. Fake housefall block messenger down for running. _____
8. Have line-throwing gun and one bolo at each station to be used. Test line-throwing gun and examine firing pin. Have extra projectiles and shot lines on-hand. _____
9. Rig station marker. _____
10. Have signal paddles available. _____
11. Fake down phone line and test phone. _____
12. Test all winches. _____
13. Have required station and emergency tools available. _____
14. Have cargo nets, net shorteners, skip box, and transfer bag available, as required. _____
15. Muster men assigned. _____
16. Make readiness report to First Lieutenant. _____

Remarks:

Figure 6-4-7. Housefall Station Replenishment Checkoff List

Burton Station #_____

(For night replenishment, note supplemental checkoff list.)

1. Ensure that whip is free of kinks and is spooled on the drum with no riding turns. _____
2. Check operation of cargo hook. _____
3. Have all swivels free and well lubricated. _____
4. Have all shackles properly secured. _____
5. Fake messengers down for running. _____
6. Have line-throwing gun and one bolo at each station to be used. Test line-throwing gun and examine firing pin. Have extra projectiles and shot lines on-hand. _____
7. Rig station marker. _____
8. Have signal paddles available. _____
9. Fake down phone line and test phone. _____
10. Test all winches. _____
11. Have required station and emergency tools available. _____
12. Have cargo nets, net shorteners, skip box and transfer bag available, as required. _____
13. Muster men assigned. _____
14. Make readiness report to First Lieutenant. _____

Remarks:

Figure 6-4-8. Burton Station Replenishment Checkoff List

1. Ensure rudder operational PMS check has been conducted within 48 hours of UNREP. _____
2. Notify EOOW of expected approach speed and speed requirement upon completion. Verify plant lineup for evolution. _____
3. Cargo and personnel manifest available on bridge (if applicable). _____
4. Fuel type and quantity requirement posted on bridge. _____
5. As applicable: Set the replenishment detail. _____
6. Post name, rank, lineal number of all Commanding Officers and the name, hull number, voice call of all ships on status board. _____
7. Test bullhorn and place in vicinity of captain's chair. _____
8. Ensure sound-powered circuits and engineering 'E' call sound power circuits are tested and set up. _____
9. Take assigned waiting station as directed by OTC. _____
10. Personnel qualification standards qualified master helmsman at the helm. Helm safety supervisor on station. _____
11. Determine replenishment order. _____
12. Set HERO condition, if applicable. _____
13. Receive manned and ready reports from main control, cargo control, after steering, bridge, replenishment stations and departmental reports. Set restricted maneuvering conditions, when directed. _____
14. ROMEO at dip, ready to go alongside (300 to 500 yards flashing light at night). _____
15. ROMEO at close-up, commencing approach. Haul up day shapes (at night turn on task and contour lights, signal ROMEO by shielded directional signal lamps or Nancy). _____
16. Pass the word over the 1MC: "On the (name of ship); stand by for shot line(s), (port/starboard side, fwd, aft, midships, all stations); all hands topside take cover." _____
17. When first messenger is in hand, haul down ROMEO. Put smoking lamp out while refueling or handling ammunition. _____
18. Fifteen minutes prior to disengaging, receiving ship only, PREP at the dip. _____
19. Replenishment complete, last station disengaging, PREP close-up. _____
20. When last line is clear, haul down PREP. _____
21. When clear (200 to 300 yards) of delivery ship, haul down day shapes (switch to normal running lights at night). _____

Remarks:

Figure 6-4-9. Bridge Replenishment Checkoff List

c. Adhere to the order for transfer of missiles and boosters as specified by the combatants.

d. Ensure that the missile is oriented in the direction specified by the receiving ship.

e. When an awkward or sensitive missile or ammunition load is to be transferred, use tag lines, a load stabilizer, or a stream strongback to prevent the load from rotating and to control the pendulum action of the load.

f. If the receiving ship does not have the landing area in which to handle full pallet loads, the ammunition ship should send only partial loads.

g. Transfer loose rounds and individual small containers in skip boxes, metal pallet crates, or cargo nets.

h. Once a transfer dolly is unloaded, return it to the delivery ship for reloading and retransfer.

6.4.8.14 Precautions. Replenishment ships shall make ready for use one fire hose, with applicator attached, at each transfer station and one additional hose at each hold, elevator access, or compartment containing or working military explosives when the hatch serving the hold is open. The hoses shall be of sufficient length to reach all portions of the hold or compartment. All hoses shall be charged except when they are exposed to freezing temperatures. Ships, other than replenishment types, shall have two fire hoses, with applicators attached, at each transfer station. All fire hoses shall be charged, except in freezing weather. On carriers, when compliance would result in charged salt water hoses crossing fire control or damage control boundaries (zebra hatches), quick-reel Aqueous Film Forming Foam (AFFF) systems may be used in lieu of saltwater hoses, provided that overhead sprinklers in the hangar bay are available and appropriate conflagration stations are manned.

6.4.8.15 References. The following publications contain information that, if used to formulate ammunition handling plans, will result in a smooth, safe, and professional operation:

a. NWP 401.4 (Replenishment at Sea).

b. ATP 16D (Replenishment at Sea, NATO).

c. OPNAVINST 8020.14/MCO P8020.11 (U.S. Navy Explosive Safety Policies, Requirements, and Procedures).

d. MIL-STD 1323 (Palletizing Fleet Issue Unit Loads).

e. NAVSEA S9570-AD-CAT-101 (UNREP Hardware and Equipment manual).

f. NAVSEA OP 4 (Ammunition Afloat).

g. NAVSEA OP 2173 (Approved Handling Equipment for Weapons and Explosives).

h. NAVSEA OP 3192 (Missile Dolly MK 6 MODs 1, 2, 3, and 4).

i. NAVSEA OP 3206 (Handling and Stowage of Naval Ordnance Aboard Ammunition Ships).

j. NAVSEA OP 3347 (U.S. Navy Ordnance Safety Precautions).

k. NAVSEA OP 3565/NAVAIR 16-1-529 (Radio Frequency Hazards to Ordnance, Personnel and Fuel).

l. NAVSEA OP 4118 (Handling, Packaging and Transportation of Underwater Mines).

m. NAVSEA S9570-AA-MMA-010 (Underway Replenishment Ordnance Handling Equipment and Transfer Units).

n. U.S. Coast Guard, 46 CFR, Part 146 (Transportation or Storage of Military Explosives).

6.4.9 Vertical Replenishment (VERTREP).

6.4.9.1 Concepts of VERTREP. VERTREP provides a capability for augmenting and enhancing UNREP. It also permits increased flexibility and considerable latitude in replenishment planning, particularly regarding time and location of the UNREP operation. There are some advantages of VERTREP that should be considered in determining the method of UNREP, particularly:

a. Reduction in overall time required to replenish the supported unit.

b. Reduction or elimination of time that screening ships are required to be off station.

c. Reduction in personnel involved.

d. Capability of replenishing units in a dispersed formation.

e. Capability to replenish units engaged in tasks which make it impossible for them to come alongside.

f. Capability of replenishing units in heavy weather conditions when alongside steaming is hazardous or impossible.

g. Capability of replenishing units on station in shallow water or at anchor.

6.4.9.2 While the VERTREP transfer rate is normally less than the CONREP transfer rate for a major Fleet unit, VERTREP can be used to distinct advantage by eliminating the time for approach, hookup, and disconnect in an alongside transfer. This is particularly true during small-scale replenishments when less than 75 short tons are to be transferred. VERTREP transfer rates of up to 180 short tons per hour or 120 lifts per hour can be achieved by a LHA utilizing two helicopters. Some small units cannot receive loads at this maximum rate because of small or partially obstructed VERTREP platforms. To minimize alongside time for small units, a combination of VERTREP and CONREP can be used. Air-Capable Ship Aviation Facilities Bulletin No. 1 specifies the various requirements for all platforms.

6.4.9.3 VERTREP Helicopters. Currently, the H-60 is the most widely used VERTREP helicopter. The H-60 can VERTREP ammunition on its external cargo hook or by internal loading. The H-60's tandem rotor configuration allows maneuverability without the wind restrictions normally associated with tail rotor helicopters. Thus, ships may vary course and speed while undergoing VERTREP. The H-2 series helicopters have a limited VERTREP capability because of their configuration and operational limitations. The H-3 series helicopters were not designed with a VERTREP capability. However, several have been modified by the addition of an external hook, and they therefore have a limited capability. CH-53 helicopters are equipped with external cargo hooks and are used by the Marine Corps for vertical lifts and by the Navy for vertical on board

delivery operations. UH-1 helicopters are equipped with external cargo hooks and have a weight-limited VERTREP capability. Refer to NWP 3-04.1 for the general capabilities of the type of helicopter employed. The number of helicopters used during a VERTREP will depend on:

a. Number of helicopters available.

b. Type and number of ships being replenished.

c. Distance between ships.

d. Ability of the receiving ship to keep the cargo drop area(s) clear.

e. Ability of the delivery ship to provide ammunition at a sufficient rate.

f. Administrative flights scheduled by the helicopter coordinator.

g. Helicopter aircrew proficiency and training requirements.

6.4.9.4 Ships Stationing. Refer to NWP 401.4 for typical ship stations for VERTREP.

6.4.9.5 Helicopter Coordinator. The replenishment group Commander will designate a helicopter coordinator to control and coordinate all helicopters and VERTREP operations. Normally, the helicopter coordinator will be the Senior Commanding Officer of the replenishment ship with VERTREP helicopters embarked and participating in the operation. The helicopter coordinator will make appropriate recommendations to the replenishment group Commander concerning:

a. Recommended replenishment course for optimum relative wind for helicopter operation.

b. Delivery ship position in the formation to shorten the distance between transferring and receiving ships to enhance VERTREP effectiveness without hazarding other ships in formation.

c. Coordination of helicopter administrative flights through the officer in tactical command.

6.4.9.6 VERTREP Equipment. Certain cargo handling, load-carrying, and auxiliary equipment is needed for VERTREP. Some items have been used for CONREP for a number of years. A few have been designed specifically for VERTREP. For applicable types of equipment, descriptions, and their proper uses, refer to NAVSEA OP 4098 and NWP 401.4.

6.4.9.7 VERTREP Preparations. Plan a VERTREP operation several days before the actual flight operation. From 3 to 15 days before a scheduled VERTREP, distribute issue documents for customer ships to cargo hold captains. Hold a replenishment planning conference to develop a munitions breakout plan. From 1 to 3 days in advance of the scheduled delivery, begin breakout, strikeup, pallet assembly, and prestaging. Stage as much ammunition as possible near the VERTREP area before the actual operation begins. The primary concern when preparing loads is to provide a load that will ride safely in flight and arrive at the receiving ship undamaged. VERTREP loads differ from CONREP loads in that they are subject to extremely high winds from rotor downwash during hover and during the flight between ships. The detailed procedures in NAVSEA S9570-AA-MMA-010 and NWP 14, for preparing ordnance loads for VERTREP can also be used for preparing other types of loads of similar configuration. Prior to flight operations, ensure the VERTREP checklist in Figure 6-4-10 has been completed.

1. Turn navigational aids on. _____
2. Lay out VERTREP gear. _____
3. Lower nets. _____
4. Set ZEBRA in vicinity of flight deck. _____
5. Preposition material handling equipment. _____
6. Muster working party. _____
7. Hoist the Bravo flag. _____
8. Flag HOTEL ONE at the dip. _____
9. Lower flagstaff, antennae, and obstructions (as appropriate). _____
10. Conduct foreign object damage walkdown. _____
11. Establish receive and transmit communications at helicopter control station. _____
12. Have lifeboat manned and ready. _____
13. Have crash and rescue team manned and ready. _____
14. Have flight deck manned and ready. _____
15. Hoist day shapes. _____
16. Determine launch and recovery course and speed. _____
17. Put smoking lamp out in vicinity of flight deck. _____
18. Obtain permission from bridge to land and launch helicopter(s). _____

    For night operations:

    (a) Double-check darken ship. _____
    (b) Light suit on deck. _____
    (c) Wands on station. _____
    (d) Task lights energized. _____
    (e) Deck lights on. _____

Figure 6-4-10. VERTREP Replenishment Checkoff List

6.4.9.8 Weight and Identification of Loads. As each load is made up, mark the load with its weight and any identification required by the customer. The method of marking depends on the procedure of the individual delivery ships. Use chalk, felt-tipped pen, or a tag. Tags may be color-coded for easier identification. VERTREP loads shall be color-coded when transfers are conducted under emission control conditions.

6.4.9.9 Sling Attachment and Staging Unit Loads. Prior to actual flight operations, ensure that the proper adjustable pallet slings are being used and that they are properly attached in accordance with the procedures outlined in NAVSEA S9570-AA-MMA-010 and NWP 401.4. Primary considerations in preparing and executing the flight deck cargo staging plan are outlined below:

a. Sufficient clear space should be left on the deck to pull out the helicopter and to provide adequate clearance for takeoff and a landing area for possible emergency landings.

b. Complete staging of the flight deck after VERTREP has commenced is permissible provided another certified landing area is available that is satisfactory to the helicopter detachment officer in charge.

c. All staged unit loads must be located within the hover area, bounded by periphery or hover lines, and be accessible for pickup by the hovering helicopter.

d. Sufficient room shall be left for hookup personnel to move about; always have an escape route available.

e. Load height will be such that hookup personnel can accomplish the task without climbing on loads. Hook-up personnel should remain on deck at all times.

f. Sufficient room must be left between loads to reduce the possibility of snagging and tipping adjacent loads during pickup.

6.4.9.10 Load Transfer Procedures. Internal loads are usually far more time-consuming than external loads and should therefore be avoided except for transfer at great distances where a landing area is available for offloading. Before operations start, provide pilots and crewmen with the name, type, hull number, and location in the formation, frequencies, and tactical voice call of the receiving ship. As each load is picked up, display information, including destination and weight of each load, on a chalkboard from a position clearly visible to the pilot. An alternate method is to write the weight of the load with chalk on the side of the upper eye of the MK 106 sling, where it can be easily seen by the helicopter crewman during hookup. As the helicopter nears the UNREP ship, its approach is announced over the deck edge speakers. All personnel shall clear the pickup zone, except hookup personnel who take positions alongside the load and hold the pendant up to signal the load location to the pilot. Guided by signals from the landing signal personnel, the pilot maneuvers the helicopter to hover over the load. A helicopter crewman, viewing the deck through the open cargo hook access hatch, advises the pilot via internal communication system, as to the helicopter's exact position over the load. As the helicopter hovers over the load, the hookup person hands the pendant to the aircrew in the cargo hatch and clears the area, moving toward the landing signal personnel. The crewman then slips the pendant over the safety hook and ensures that the load is secure and ready for lifting. That method ensures positive hookup of the pendant and eliminates unnecessary and unsafe chasing of the helicopter by hookup personnel. The aircrewman aboard the helicopter then gives

the pickup and liftoff directions to the pilot in order to clear the load from the pickup area. The aircrewman aboard the helicopter is the primary director of the helicopter once it is in a hover over the pickup or drop area. The landing signal enlisted personnel shall also continue giving directions in case of internal communications failure or other emergencies of which the flightcrew is unaware. Radio transmissions to helicopters hovering over the VERTREP zone are distracting to the pilot and should be of an urgent nature only.

CHAPTER 6.5

Conventional Weapons Handling Procedures Afloat (CVN)

Table of Contents

Paragraph	Subject	Page
6.5.1	General	6-5-1
6.5.2	Weapons Department Administrative and Operational Organization	6-5-1
6.5.3	Weapons Department Organization and Tasks	6-5-1
6.5.4	Safety	6-5-9
6.5.5	Ordnance and Ammunition Requisitioning and Issue	6-5-9
6.5.6	Ordnance and Ammunition Upload and Backload Plan	6-5-10
6.5.7	Aviation Weapons Movement Control Station (AWMCS)	6-5-12
6.5.8	Fleet Sentencing	6-5-12
6.5.9	Aircraft Loading, Arming, Dearming, and Downloading	6-5-13
6.5.10	Inspections	6-5-15

List of Illustrations

Figure	Title	Page
6-5-1	Typical CVN Weapons Department Administrative Organization	6-5-2
6-5-2	Typical CVN Weapons Department Operational Organization	6-5-3

CHAPTER 6.5

Conventional Weapons Handling Procedures Afloat (CVN)

6.5.1 General. This chapter provides information and promulgates standardized procedures that will facilitate safe, efficient handling of conventional Aviation Ordnance aboard CVN class ships. This information, in conjunction with the individual ship's conventional ordnance safety and handling bill procedures and the CVN Naval Air Training and Operating Procedures Standardization (NATOPS) manual, provides the direction necessary to establish a viable ordnance handling program.

6.5.2 Weapons Department Administrative and Operational Organization. To maintain standardization, the Weapons Department Administrative and Operational Organizations and functional assignments shall comply with this chapter. Figures 6-5-1 and 6-5-2 are examples of CVN Weapons Department Administrative and Operational Organization.

6.5.3 Weapons Department Organization and Tasks.

6.5.3.1 The Weapons Officer (Gun Boss). The Gun Boss is responsible to the Commanding Officer for the procurement, accountability, handling and stowage of all ship's ammunition; for the readiness of all supporting systems; and, for the readiness of the ship's self-defense small arms weapons. Reports to the Commanding Officer for the training and operational readiness of assigned personnel; and for the readiness, material condition, and security of assigned ammunition, equipment, supporting systems and spaces. The Weapons Officer is responsible to the Executive Officer for administrative matters.

6.5.3.2 The Ordnance Handling Officer (OHO). The OHO is responsible for:

a. Ensuring the efficient operation and maintenance of all magazines, sprinkler systems, weapons elevators, and associated handling equipment.

b. Manage the direct procurement, safe handling, stowage, accounting, assembly, disassembly, maintenance, and issue of all conventional ordnance and components, ensuring proper records and reports are prepared, submitted and maintained.

c. Managing the ship's Ship Fill, Mission Load Allowances, and embarked air wing Non-Combat Expenditure Allocation (NCEA).

d. Exercising operational control of all divisions within the Weapons Department through their respective Division Officers.

e. Coordinating and directing the movement of all ordnance.

f. Ensuring proper operating procedures and safety precautions are strictly followed in the assembly and movement of all conventional ordnance, including the arming and dearming of embarked aircraft.

g. Overseeing the Weapons Departments in the maintenance and security of magazines and ready service lockers.

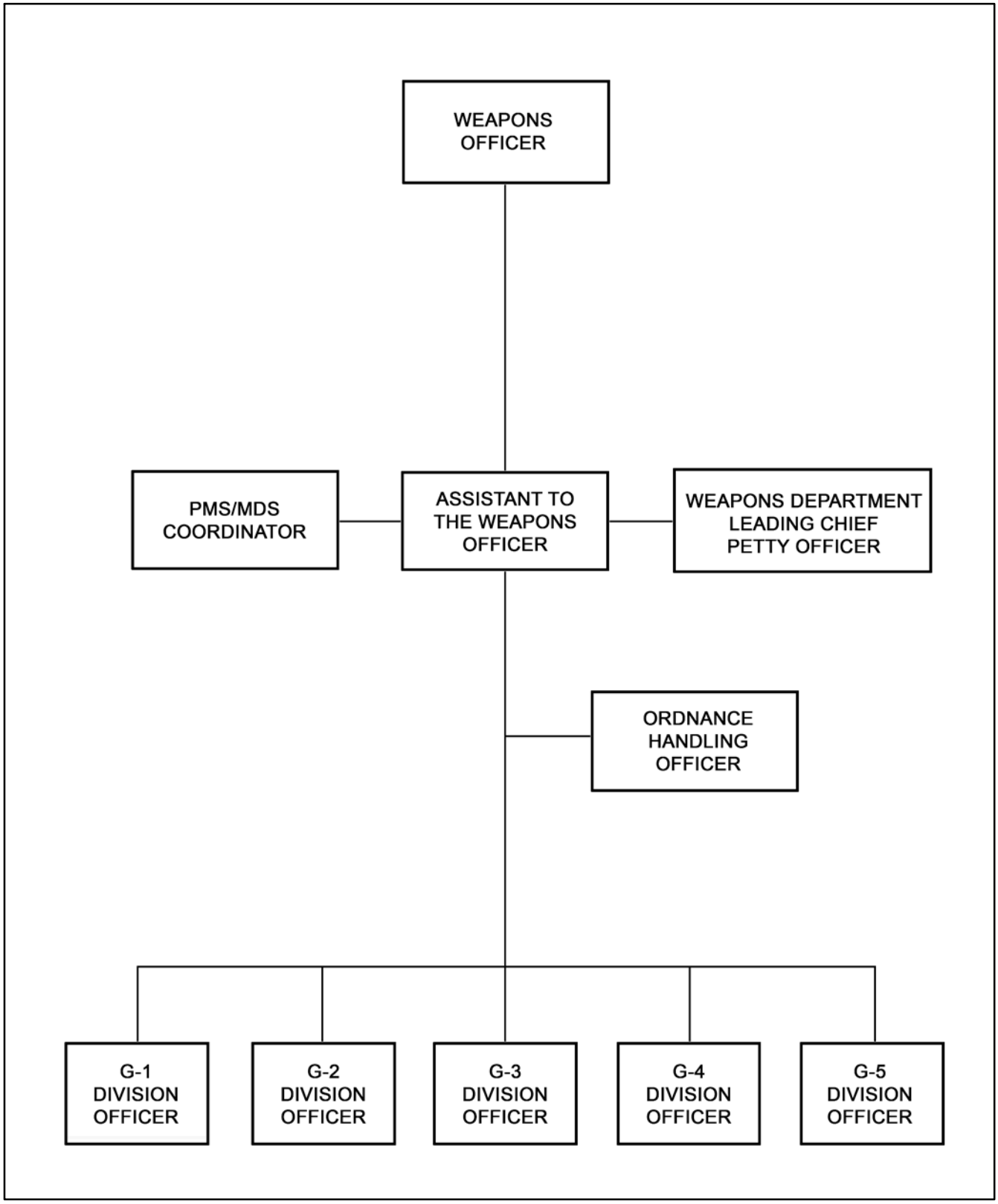

Figure 6-5-1. Typical CVN Weapons Department Administrative Organization

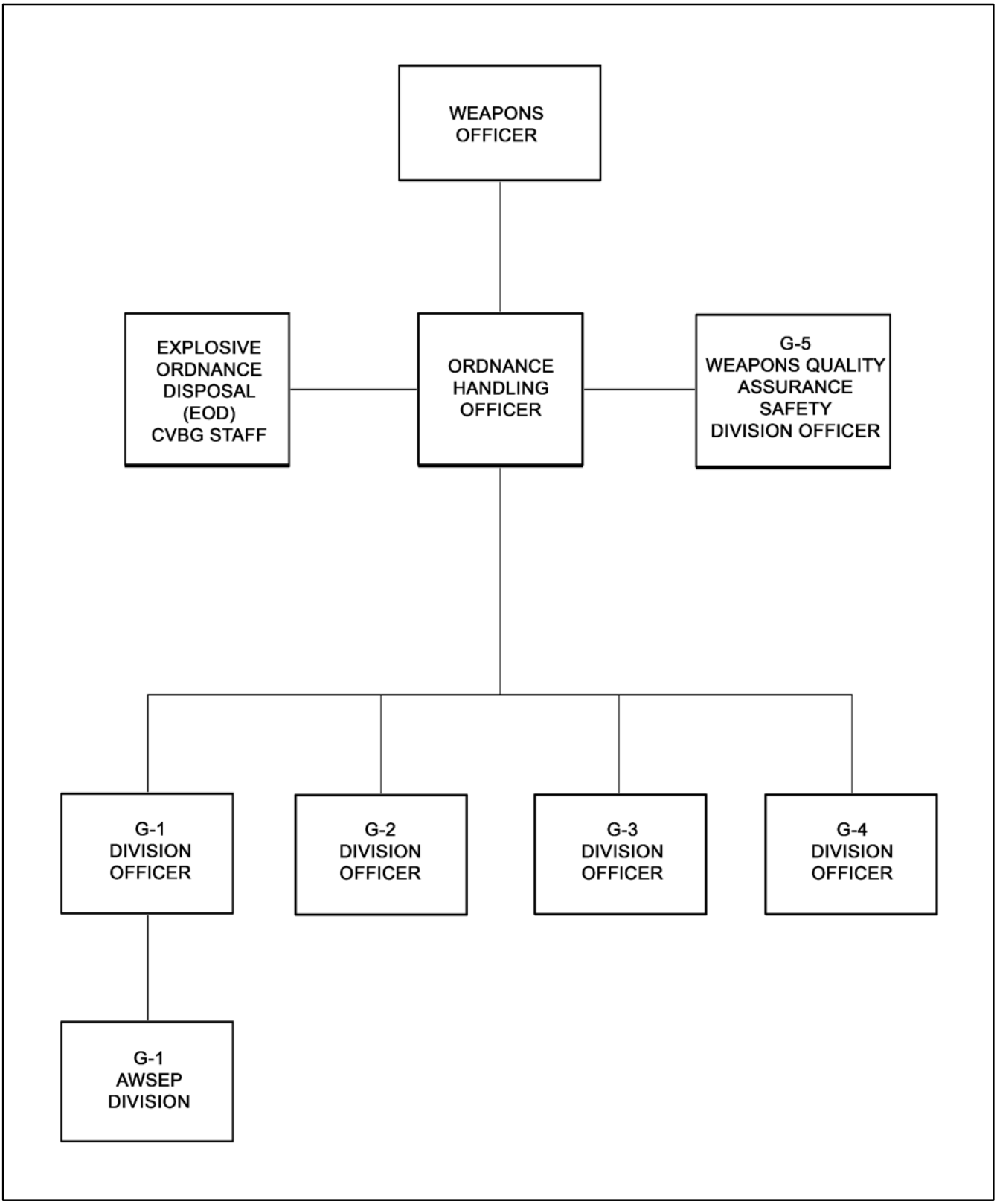

Figure 6-5-2. Typical CVN Weapons Department Operational Organization

h. Maintaining liaison with the Strike Operations Officer and the embarked units to ensure proper types and quantities of ordnance are available.

i. Manage the All Weapons Information System (AWIS).

j. Provide assistance, as required by the Explosive Ordnance Disposal (EOD) Officer, for rendering safe, recovery and disposal of explosive ordnance which has been fired, dropped, or launched in such a manner as to constitute a hazard to operations, installation, personnel, or material.

k. Monitoring the Navy Personnel Ammunition and Explosives Handling Qualification and Certification Program for the ship.

l. Exercise overall supervision of ammunition working parties and ensure all personnel have been instructed in pertinent safety precautions prior to conducting such evolutions.

m. Notifying the Weapons Officer of any ordnance casualty or other equipment failures.

n. Frequently inspecting assigned equipment to ensure compliance with operational, maintenance, repair, and review operational casualty reports.

o. Monitor departmental ordnance/ship alterations and liaison with the Ship's Maintenance Manager via the Weapons Officer during major ship maintenance and overhaul periods.

p. Perform other such duties as may be assigned.

6.5.3.3 Weapons Department Leading Chief Petty Officer (LCPO). The LCPO is responsible for:

a. Assists the Weapons Officer and acts in an advisory capacity for all matters pertinent to the welfare, job satisfaction, motivation, utilization and training of Weapons Department enlisted personnel.

b. Acts as the manpower manager for the department. Responsible for all Temporary Assignment of Personnel Lists (TAPLs).

c. As training officer, coordinate school training requirements/Navy Enlisted Classifications (NECs) in accordance with Carrier Training Plans and Fleet Training Management and Planning System (FLTMPS).

d. Assigns section leaders and approves watch bills.

e. Observes the work effort for all conventional ordnance evolutions.

f. Perform such other duties as may be assigned.

6.5.3.4 G-1 Officer/Division (Flight Deck/Hangar Deck AWSEP). Is responsible for:

a. Safe and efficient ammunition/support equipment handling on the flight and hangar decks during weapons operations.

b. Maintaining real-time status of all ammunition on the flight deck to the Aircraft Handling Officer.

c. The proper/safe stowage of ammunition and material condition of the flight deck ready service lockers, jettison ramps, gallery deck magazines and Electronic Countermeasure (ECM) complex.

d. Assisting the Air Wing Ordnance Officer during the arming and dearming of embarked aircraft.

e. Documenting captive carry time for air launched weapons.

f. The maintenance, configuration, and accountability of all assigned Armament Weapons Support Equipment (AWSE) as defined in the Naval Aviation Maintenance Program (NAMP) COMNAVFORINST 4790.2 series.

g. The use and material condition of all Weapons Handling Equipment (WHE), Portable Ordnance Handling Equipment (POHE), ensuring correct quantities are on board, serviceable and weight tested.

h. Proper sentencing of ammunition stowed in assigned magazines.

i. Ensure Notice of Ammunition Reclassification (NAR) compliance of all affected ammunition as directed by Ammunition Management and Accuracy Team (AMAT).

j. Physical security of all assigned spaces, ammunition and explosives.

k. Ensure that an active Tool Control Program (TCP) is in effect.

l. Ensure a dynamic, continuous Aviation Ordnance training program is in effect.

m. Ensure accomplishment of the PMS.

n. Perform such other duties as may be assigned.

6.5.3.5 G-2 Officer/Division (Armory/Sprinklers). Is responsible for:

a. Readiness and maintenance of the ship's magazine sprinkler systems, and fire detection systems to include magazine temperatures and maintaining proper logs.

b. Readiness and maintenance of the ship's small arms weapons and related equipment (including Ship Self Defense Force Ready for Issue Lockers).

c. Maintain and control access to all ships ammunition stowage spaces, magazines, Ready Service Locker's, Cartridge Actuated Device (CAD) Lockers, Jettison Lockers, ECM Complex, in accordance with OPNAVINST 5530.13C.

d. Maintenance and accountability of High Security Locks and Keys, crew served weapons, and gun mounts assigned.

e. Maintain a complete inventory of Small Arms, associated laser devices and Night Vision Equipment by serial number and provide documentation to the OHO.

f. Proper sentencing of ammunition stowed in assigned magazines.

g. Proper and safe stowage of ammunition in magazines and ready service lockers assigned to G-2 Division.

h. Training of crew served weapon teams.

i. Manage all tasks associated with Light-Weight Torpedo safety, emergency response, stowage, maintenance, flight accessory installation and removal.

j. Ensure NAR compliance of all affected ammunition as directed by AMAT.

k. Manage, maintain and safely operate afloat firing range used to qualify all required personnel.

l. Ensure all personnel required to stand an armed watch, including the Ship's Self Defense Force are qualified in the safe operation of small arms.

m. Physical security of all assigned spaces, ammunition and explosives.

n. Ensure that an active TCP is in effect.

o. Ensure a dynamic, continuous Aviation Ordnance training program is in effect.

p. Ensure accomplishment of the PMS.

q. Perform such other duties as may be assigned.

6.5.3.6 G-3 Officer/Division (Weapons Assembly). Is responsible for:

a. Readiness and maintenance of all ship's magazines and handling areas below the main deck.

b. Safe and efficient ammunition/support equipment handling on the second deck and below during weapons operations and replenishment.

c. Safe, compatible and proper stowage configuration of all ammunition assigned.

d. Ensure NAR compliance of all affected ammunition as directed by AMAT.

e. Intermediate level maintenance of all assigned airborne weapons. To include stowage, breakout, handling, assembly, test, reprogramming, and strike-up/down of all ammunition required to support training and combat operations.

f. Operation and maintenance of all WHE in magazine spaces.

g. Proper sentencing of ammunition stowed in assigned magazines.

h. Physical security of all assigned spaces, ammunition and explosives.

i. Ensure that an active TCP is in effect.

j. Ensure a dynamic, continuous Aviation Ordnance training program is in effect.

k. Ensure accomplishment of the PMS.

l. Perform such other duties as may be assigned.

6.5.3.7 G-4 Officer/Division (Elevators/Forklifts). Is responsible for:

a. The safe operation, security, and maintenance of the weapons elevators.

b. Will coordinate with OHO/Handler/Elevator Support Unit (ESU)/shipyard activities to ensure availability of elevators for movement of ordnance/support equipment, conduct PMS and movement of casualties during Planned Incremental Availability (PIA)/Docking Planned Incremental Availability (DPIA)/Ship Restricted Availability (SRA).

c. Maintaining a master list of all elevator weight tests, System Operability Test (SOT) Level III tests, over-speed governor, gage, thermometer, pressure switch and relief valve calibration.

d. Implementation, management, and administration of training, testing, qualification and licensing of elevator operators and maintenance personnel.

e. Operation and maintenance of the weapons elevator Emergency Ordnance Handling (EOH) equipment.

f. The training, licensing, maintenance and operation of all Raymond Reach forks (4.5K EE), and On-the-Job Training (OJT)/licensing of 6K forklift within Weapons Department provide daily status report on Raymond Reach folks (4.5K EE) to OHO.

g. Assist ESU when embarked for planned maintenance/inspections/testing.

h. Physical security of all assigned spaces.

i. Manage, maintain and disburse Weapons Department Operation Target (OPTAR) funding.

j. Ensure that an active TCP is in effect.

k. Ensure a dynamic, continuous Aviation Ordnance training program is in effect.

l. Ensure accomplishment of the PMS.

m. Perform such other duties as may be assigned.

6.5.3.8 G-5 Officer/Division (Admin/AWMCS/AMAT/3M/DC/QA/Safety).

6.5.3.8.1 **Admin** is responsible for:

a. Billeting for Weapons Department personnel.

b. All Weapons Departmental correspondence.

6.5.3.8.2 **AWMCS** is responsible for:

a. Directs the stowage, breakout, handling, assembly, test, reprogramming, and strike-up/down of all ammunition required to support training and combat operations tasking.

6.5.3.8.3 **AMAT** is responsible for:

a. Establish, maintain and monitor of the command's AMAT program with the goal of not less than 99.5% ammunition inventory reporting accuracy.

b. Establish an effective and accurate inventory program in accordance with NAVSUP P-724.

c. Retail Ordnance Logistics Management System/Ordnance Information System (ROLMS/OIS) Administrator, maintain a current, complete, and accurate Master Asset Listing for all ammunition assets held on board.

d. Establish and maintain an effective system for the compliance of Notices of Ammunition Reclassification (NARs).

e. Verify and manage NAVSEA 30,000 list and mission fill tailored allowances.

f. Maintain mission and training allowances for all embarked units.

6.5.3.8.4 <u>3M Damage Control (DC) Coordinator</u> is responsible for:

a. Proper execution of the Weapons department PMS and MDS program.

b. Coordinates the effort of weapons department divisions/work centers, ensuring complete and accurate execution of PMS and 3M Programs.

c. Analyze 3M reports, providing meaningful information to the Weapons Officer regarding the maintenance efforts within the department.

d. Screen and control the issue of maintenance control and job control numbers for work requests within the department.

e. Establish and conduct weapons department Master CSMP.

6.5.3.8.5 <u>Quality Assurance (QA)/Safety</u> is responsible for:

a. Assign QA/Safety Representatives to ensure proper operating procedures and safety precautions are strictly followed during all ordnance evolutions.

b. Monitor the training of personnel manning the AWMCS.

c. Investigate Ordnance Incidents/Accidents or equipment failures and provide recommendations to mitigate future occurrences. Draft required reports.

d. Establishing and maintaining the following weapons department programs.

(1) Central Technical Publication Library (CTPL)

(2) Safety Program

(3) Fleet Sentencing Qualification Program

(4) Conducting the Shipboard Explosive Safety Self Assessment (SESSA)

(5) The Department Monthly Management Plan

(6) Establish and monitor Weapons Department Individual Material Readiness List (IMRL)

e. Monitoring/Audit the following programs.

(1) Tool Control

(2) PMS

(3) Foreign Object Damage (FOD)

(4) Explosive Handling Personnel Qualification and Certification

(5) Elevator Licensing

(6) Material Handling Equipment (MHE) Licensing

(7) Airborne Weapons Support Equipment (AWSE)

(8) Aircraft Armament Equipment (AAE) Security

(9) AA&E Physical Security Screening

(10) Precision Measuring Equipment (PME)

(11) WHE, POHE, and OHE, maintenance, inventory, weight test scheduling

(12) Ammunition evolutions

(13) Ammunition Inventory Accuracy

(14) Armory Programs

(15) Maintenance/Testing of the magazine sprinkler systems, and fire/flood detection systems

(16) Dispersed Technical Publication Library (DTPL)

(17) Ammunition stowage compatibility

(18) FLTMPS requirements

f. Physical security of all assigned spaces.

g. Perform such other duties as may be prescribed.

6.5.4 Safety.

6.5.4.1 It is difficult to cover every possible situation which may arise and which, unless properly handled, may have serious results. Carelessness, noncompliance with procedures, disorganization, uncalled for haste, ignorance, complacency, and lack of effective leadership are some of the most significant causes of ordnance accidents.

6.5.4.2 It has been said that ordnance safety precautions are written in blood. This is basically true, as most ordnance safety precautions now in existence have come about as the result of accidents in which personnel have been killed or injured. Printed precautions alone cannot prevent accidents. Safe operating procedures must be explained in detail by those who know to those who do not. Safety consciousness must be instilled by constant supervision, instruction, and training, for safety is both the result and reflection of good training, and the two are inseparable. Operational Risk Management (ORM) will be considered prior to any operation. The contents of NAVSEA OP 3347 (United States Navy Ordnance Safety Precaution) should be common knowledge to all personnel engaged in the handling of explosive devices.

6.5.5 Ordnance and Ammunition Requisitioning and Issue.

6.5.5.1 Ammunition Transaction Reporting. Timely and accurate reporting of all ammunition transactions into the OIS is the reporting activity. All OIS users have an obligation to pursue

apparent errors in the OIS database and ensure their reconciliation. Detailed information regarding the implementation and operation of this system is contained in the implementing directive, OPNAVINST 8015.2 and NAVSUP P-724. Questions relating to Fleet reporting should be referred to the Naval Supply Systems Command Global Logistics Support (NAVSUP GLS AMMO). All ordnance and ammunition necessary to support the ship's fill allowance, mission load, EOD, and air wing training requirements will be ordered by the Weapons Department. The OHO shall ensure timely submission of ordnance and ammunition requisitions to meet planned operations. The OHO shall submit requisitions as provided in the current revisions of NAVSUP P-724 and COMPACFLTINST 8010.12. All requisitions for conventional ordnance and ammunition, not to be filled from in-theater assets, shall be sent to the NAVSUP GLS AMMO. Include the inventory manager as an information addressee in requisitions for Non-Fleet assets sent via naval message.

6.5.5.2 No ordnance and ammunition will be issued to embarked units without prior authorization of the OHO.

6.5.6 Ordnance and Ammunition Upload and Backload Plan.

6.5.6.1 General. The ordnance and ammunition necessary for the ship's mission load and shipfill allowances is normally uploaded or backloaded during underway periods. Therefore, a plan for the expeditious but safe accomplishment of the evolution is an absolute necessity to reduce alongside time. An uploaded and backloaded plan will be published prior to each evolution. The plan will assign responsibilities and provide specific procedures or instructions to be followed during the upload or backload. The following information should be included in the Plan:

6.5.6.2 Assignment of Responsibilities.

6.5.6.2.1 Weapons Officer.

a. Exercise overall responsibility for the execution of ammunition handling evolutions.

b. Keep the Commanding Officer, Executive Officer, and the OOD informed regarding programs and estimated time of completion of the evolution.

6.5.6.2.2 Ordnance Handling Officer.

a. Draft the upload and backload plan.

b. Supervise the evolution under the direction of the Weapons Officer.

c. Inform the OOD or the Navigator when the Weapons Department is manned and ready for Underway Replenishment (UNREP) by Vertical Replenishment (VERTREP) or Connected Replenishment (CONREP) of ammunition.

d. Ensure that safety precautions are promulgated and that all personnel involved are properly indoctrinated.

e. Ensure proper stowage of all ammunition.

f. Ensure proper accounting and reporting.

g. Direct the movement of ammunition.

6.5.6.2.3 Air Officer.

a. Ensure required aircraft elevators are manned.

b. Ensure conflagration stations are manned.

c. Ensure twin-agent units and P-25 fire truck are manned.

d. Ensure flight and hanger decks are properly spotted in accordance with the onload or offload plan.

e. Provide landing signal personnel for VERTREP.

f. Ensure primary flight control is manned.

g. Conduct VERTREP.

6.5.6.2.4 Navigator.

a. Ensure the OOD is briefed not to conduct any drills during ordnance handling evolution.

b. Keep the OHO advised of any adverse weather conditions.

6.5.6.2.5 Safety Officer. Ensure adequate safety observers are available.

6.5.6.2.6 Aircraft Intermediate Maintenance Department Officer.

a. Ensure all available forklifts are ready for use and certified for explosive handling in accordance with NAVSEA SW023-AH-WHM-010.

b. Ensure qualified forklift maintenance personnel are available.

6.5.6.2.7 Supply Officer.

a. Provide refreshments during evolution.

b. Provide box lunches as required.

6.5.6.2.8 Chief Engineer.

a. Ensure Aqueous Film Forming Foam (AFFF) stations are manned as applicable.

b. Ensure that the ship has no more than a 3 degree list and that no unauthorized hot work is in progress during the evolution.

6.5.6.2.9 Medical Officer.

a. Provide corpsmen as per the upload or backload plan.

b. Ensure ship's dispensary is prepared to receive possible casualties.

6.5.6.2.10 Deck Officer.

a. Ensure preparation and manning of CONREP stations for ammunition transfer.

b. Provide Weapons Department and the OOD with updated CONREP count.

6.5.6.2.11 Security Officer. Provide security personnel during evolution.

6.5.6.2.12 Officer of the Deck. When notified by the OHO, set emission control conditions, smoking condition, and ensure bravo flag is hoisted.

6.5.6.2.13 Air Wing Commander. Provide squadron augmentee personnel as required.

6.5.6.2.14 EOD Officer. Ensure EOD personnel are properly positioned during entire evolution.

6.5.6.2.15 G-1 Division Officer. Provide the AWMCS and OOD with an up-to-date VERTREP count.

6.5.7 Aviation Weapons Movement Control Station (AWMCS). The AWMCS usually called "Ordnance Control," provides the centrally located control station and communication network necessary to coordinate and control all weapons movement on the carrier. The control station is manned by a select cadre of ordnance personnel under the supervision of the OHO. The AWMCS within the Weapons Department that has direct communication with damage control central, bridge strike operations, flight deck control, EOD, primary magazines and all ammunition transfer and staging areas. Additional function of the AWMCS are as follows:

a. Acts as primary contact point for emergencies involving explosive ordnance.

b. Maintains an accurate and current log of all significant events.

c. Maintains the location of all ordnance outside of magazines.

d. Maintains accurate records of breakout of ordnance in support of the daily ordnance load plan including any changes.

e. Monitors the issue and receipt of all ordnance and expenditures.

f. Distributes the daily ordnance load plan to departmental personnel.

g. Monitors and keeps cognizant personnel advised of any out-of-the ordinary occurrences, changes to load plan, accidents, incidents, system malfunctions, magazine floodings, high temperature alarms, etc.

h. Maintain accurate status of MHE, MHE Battery Chargers, magazine sprinkler systems, and weapons elevators.

i. Maintains and issues weapons elevator control and pump room keys.

j. Ensure Weapons Department personnel man elevators during medical emergencies.

6.5.8 Fleet Sentencing. Ordnance Publications, Naval Operational Logistics Support Center (CD) is published bi-annually (April and October). These requirements must be applied diligently, uniformly and consistently, for reasons of SAFETY, QUALITY, ACCOUNTABILITY and ECONOMY. The following publications are included in the NAVSUP CD:

a. NAVSUP P-724 Volume I Ashore and Volume II Afloat (Conventional Ordnance Management Policies and Procedures) provides policies and procedures for Navy and Marine Corps Conventional ordnance distribution, reporting, accountability and stockpile management.

b. NAVSUP P-801 (Unserviceable, Suspended and Limited Use Manual) provides a listing of suspended, limited use and unserviceable ammunition.

c. NAVSUP P-802 (Navy Ammunition Logistics Code (NALC)) provides activities with the ammunition logistic codes applicable to non-nuclear ammunition, components thereof and related material used by the Navy and Marine Corps.

d. NAVSUP P-803 (Navy Stock List of Conventional Ammunition) provides afloat and ashore Navy and Marine Corps activities with a complete listing of non-nuclear ammunition, components thereof and 2D, 2E, 2T, 4T, 6T, 6Z, 8E, 8S, 8T and 8U cog related material.

e. NAVSUP P-804 (Data Supplement) provides certain detailed physical characteristic of items cataloged in the Navy Stock List of Conventional Ammunition.

f. NAVSUP P-805/807 (Ammunition Sentencing Publication) provides established requirements and criteria for Navy and Marine Corps conventional ammunition sentencing.

g. Master Item Listing National Item Identification Number (NIIN) and Naval Ammunition Logistics Code (NALC) Sequence allow users capability to cross reference NALC to NIIN and NIIN to NALC.

6.5.9 Aircraft Loading, Arming, Dearming, and Downloading.

6.5.9.1 Weapons handling evolutions in support of and by the embarked air wing introduce an ever increasing degree of risk in carrier operations. To minimize the degree of risk involved, standardized procedures as set forth in the CVN NATOPS manual and the applicable Naval Air System Command (NAVAIRSYSCOM) conventional weapons loading manuals and checklists shall be followed. These publications provide the best available operating instructions for most circumstances; however, no manual is a substitute for sound judgment and effective supervision. It is incumbent on all personnel to stop any ordnance handling evolution which appears to be unsafe and to report the circumstances to any ship or Air Wing Officer immediately.

6.5.9.2 Responsibilities.

6.5.9.2.1 The Air Officer shall ensure that:

a. All hangar deck conflagration stations are manned.

b. There are clear access routes to weapons elevators. If flight deck weapons elevators are inaccessible, provide for an aircraft elevator as an alternate.

c. Recommendations are made pertaining to recovery of aircraft with hung ordnance in accordance with the CVN NATOPS manual. Announcements of hung or unexpended ordnance are passed to flight deck personnel.

d. Clear dearming areas are available during recovery of forward firing ordnance.

e. Proper fire fighting stations and equipment are manned.

6.5.9.2.2 The Weapons Officer shall ensure that:

a. There is a breakout of the proper types and quantities of ordnance to fulfill the requirement set forth in the daily ordnance load plan.

b. Ordnance is assembled into approved, complete configurations, except for final fuzing and arming and thorough quality control checks are completed prior to leaving assembly area.

c. Proper Hazards of Electromagnetic Radiation to Ordnance (HERO) conditions are set prior to moving ordnance.

d. Delivery of aircraft ordnance is made to the loading or ready ordnance staging areas.

e. Qualified supervision is provided for all loading, arming, dearming downloading and that strict compliance with safety instructions is enforced.

f. Qualified EOD personnel are available.

g. A flight deck crew is maintained to receive weapons on the flight deck for issue to squadron personnel and to act as ship's ordnance safety observers with appropriate authority.

h. Recommendations are made pertaining to the recovery of aircraft with hung ordnance, as delineated in the CVN NATOPS manual.

i. All ordnance asset and expenditure reports are prepared and submitted in a timely manner.

6.5.9.2.3 The Air Wing Commander shall ensure:

a. That Air Wing personnel are properly trained and adhere to the ship's ordnance safety requirements.

b. Through Squadron Ordnance Officers, that assigned aircraft are properly configured to receive ordnance, and are loaded, in accordance with the daily ordnance load plan, utilizing the aircraft's Tactical Manual (TACMAN), NAVAIRSYSCOM weapons loading manual and checklist.

c. That all aircraft loading, downloading, arming, and dearming evolutions are properly supervised.

d. That the integrated arming and dearming teams are available and properly trained.

6.5.9.3 Aircraft Loading and Downloading.

6.5.9.3.1 The preferred method of loading and downloading weapons is through the use of the single hoist ordnance loading system. This system requires no less than five personnel utilizing the HLU-196D/E electric or HLU-288 bomb hoisting units, various adapters, and store trolleys. Each individual loading checklist contains the single hoist ordnance loading system equipment requirements. This system eliminates the excessive amount of manpower required when utilizing the manual loading and downloading method. To reduce personnel fatigue and potential injury manual lifting of ordnance shall not exceed 1,000 pounds. Utilization of the HLU-256 manual hoisting equipment requires a loading team of no less than eight capable personnel.

6.5.9.3.2 Air Wing Ordnance personnel, utilizing the NAVAIRSYSCOM release and control checklist for the applicable aircraft, shall verify the condition of the aircraft's weapon system prior to loading weapons.

6.5.9.3.3 Aircraft loading and downloading is accomplished by Air Wing Ordnance personnel in accordance with the appropriate conventional weapons loading manual and checklist. The procedures outlined in these publications are mandatory and ensure safe, effective ordnance evolutions. Each task follows a set sequence of events which complements and supports the total evolution. Safety and reliability are key elements in all loading procedures.

6.5.9.4 Aircraft Arming and Dearming.

6.5.9.4.1 Aircraft carriers employ the use of an air wing integrated arming and dearming team. This team is comprised of a safety supervisor or team leader and two arming and dearming personnel. There is usually one team assigned to each catapult. The teams are highly trained, qualified, and certified personnel drawn from the embarked squadrons. The Air Wing Ordnance Officer directs their efforts and is responsible for their training.

6.5.9.4.2 Arming and dearming shall be conducted in the approved areas in accordance with the procedures outlined in the loading checklist utilizing the hand signals contained in the CVN NATOPS.

6.5.9.4.3 Under no circumstances shall unauthorized personnel participate in the arming or dearming of aircraft. When an aircraft returns from its flight, or the flight is cancelled, the aircraft shall be downloaded as soon as possible unless it is scheduled to fly on the next launch or is placed in an alert status.

6.5.9.5 General and Specific Safety Precautions. Safety precautions, warnings, and notices are contained in the CVN NATOPS manual, loading manuals, checklists, and the ship's HERO instructions.

6.5.9.6 Weapons Cookoff. Explosives handled on the flight or hangar decks are subjected to an environment of hot jet or starting unit exhausts and the ever present possibility of a fuel or aircraft fire. Catastrophic consequences can and have resulted from the prolonged exposure of ordnance to extreme temperatures. Therefore, it is incumbent upon all hands to ensure that hot exhausts are not permitted to impinge upon explosive items. The Aircraft Firefighting and Rescue Manual, NAVAIR 00-80R-14, provides cookoff times for ammunition normally handled on board the carrier.

6.5.10 Inspections. Inspections play an integral role in the explosive safety posture aboard any ship. It is the responsibility of all individuals assigned to the Weapons Department to maintain vigilance in maintaining constant readiness levels, and in doing so, will be prepared for the myriad of inspections/evaluations required in assessing a commands combat readiness. The following are just a few examples of inspections/evaluations performed during a Inter-Deployment Readiness Cycle (IDRC). Consult the applicable Type Commander (TYCOM) for further clarification/requirements.

a. Conventional Ordnance Safety Review (COSR). Normally performed in conjunction with the Combat Systems Readiness Assessment (CSRA). This inspection will evaluate the commands overall explosive safety program and is conducted by the Explosive Safety Support Offices (ESSOs) both East and West coast using the checklist found in NAVSEAINST 8023.12 as a guide.

b. Magazine Sprinkler System Review (MSSR), is an element of the COSR (normally performed every 24 months) or at the request of the TYCOM, conducted by Fleet Training Center, Pacific (FTCPAC/LANT) using the checklist found in the S9522-AA-HBK-010.

c. Naval Safety Center audits. This inspection focuses on the commands safety program overall. However, the team will inspect magazines, access trunks, safety nets, and Personnel Protection Equipment (PPE).

d. 3M Inspection. This inspection will evaluate the commands overall 3M Program as it pertains to preventative maintenance and is usually conducted by the applicable TYCOM representatives.

e. Torpedo Readiness Certification (TRC) is conducted by the applicable TYCOM during each IDRC. The TRC will assess the ability of the ship to properly and safely store, handle and prepare MK 46/MK 50 torpedoes, within the scope of assigned mission.

f. Material Inspection is a formal inspection conducted by the Board of Inspection and Survey (INSURV) and will determine the actual condition of the ship and its equipment with respect to the ability to perform all functions for which the items were designed. Inspections are normally held not to exceed 60 months between inspections.

g. Aviation Ordnance Readiness Review (AORR). Provides the Weapons Officer/Maintenance Officer with an overall assessment of operational capabilities within their respective departments and is further discussed in Volume I, Chapter 3.5.

SECTION 7

Aircraft Armament Equipment (AAE)

Table of Contents

Chapter	Subject	Page
7.1	Introduction	7-1-1
7.2	Organizational Level Maintenance	7-2-1
7.3	Intermediate Level Maintenance	7-3-1
7.4	Depot Level Maintenance	7-4-1
7.5	Aircraft Armament Equipment (AAE) Planning Factors and Inventory Reporting	7-5-1

CHAPTER 7.1

Introduction

Table of Contents

Paragraph	Subject	Page
7.1.1	General	7-1-1
7.1.2	Responsibilities	7-1-1
7.1.3	Scope	7-1-1
7.1.4	Aircraft Armament Equipment (AAE) Categories	7-1-1
7.1.5	Applicability	7-1-2
7.1.6	Aircraft Bomb Racks	7-1-2
7.1.7	Guided Missile Launchers	7-1-6
7.1.8	Adapters	7-1-8
7.1.9	Maintenance Philosophy	7-1-8
7.1.10	Equipment History Record (EHR) Cards	7-1-9
7.1.11	Record Keeping and Reporting	7-1-12

List of Illustrations

Figure	Title	Page
7-1-1	Bomb Racks	7-1-3
7-1-2	Guided Missile Launchers	7-1-7
7-1-3	Technical Manual Matrix	7-1-10

CHAPTER 7.1

Introduction

7.1.1 General. This section addresses maintenance program management of Aircraft Armament Equipment (AAE). During a weapon system's deployment life cycle phase, maintenance program management is a critical management function due to the impact of maintenance requirements on the effective use of personnel, material, facilities, and fiscal resources. Maintenance program management functions include maintenance planning, coordinating, budgeting and evaluating program progress. AAE is under the technical cognizance of the Commander, Naval Air Systems Command (COMNAVAIRSYSCOM). Inventory management responsibilities are assigned to COMNAVAIRSYSCOM.

7.1.2 Responsibilities.

7.1.2.1 The Assistant Commander for Logistics and Fleet Support, through the Logistics Management Division, is responsible for the maintenance management and funding of airborne weapons maintenance programs. COMNAVAIRSYSCOM is responsible for management, integrated logistics support, and maintenance engineering functions pertinent to airborne weapons systems under COMNAVAIRSYSCOM cognizance.

7.1.2.2 Assistant Program Managers, Logistics (APML) within COMNAVAIRSYSCOM plan and implement integrated logistics support and project support management activities for major weapons systems. APMLs are responsible directly to weapons system Program Managers, Air (PMA) for logistics aspects of acquisition programs from inception through deployment and eventual phaseout from the active inventory. APMLs are directly responsible to the Product Support Manager (PSM) for the effective planning and development of operationally effective and cost-effective support systems for acquisition programs, and management of Integrated Logistics Support (ILS) for out-of-production programs.

7.1.2.3 Volume I, Section 2 defines maintenance functions that apply to AAE and assigns maintenance responsibilities that apply to AAE. Chapters 7.2 through 7.4 of this section describe Organizational, Intermediate, and Depot level maintenance actions that apply to AAE.

7.1.3 Scope. AAE encompasses all equipment which is or can be attached either permanently or temporarily to an aircraft, the use of which allows for the carriage and release of airborne stores. AAE includes bomb racks for all practice and tactical, single and multiple weapon design configurations and their aircraft peculiar fairings; pylons and adapter hardware; missile launchers, including their related entities such as power supplies, nitrogen receivers, and aircraft peculiar pylons; adapters, rails, and interface components.

7.1.4 Aircraft Armament Equipment (AAE) Categories. The two categories of AAE are as follows:

a. Aircraft Inventory Material. Aircraft inventory items are semi-permanently attached to an aircraft and are transferred with the aircraft from one aircraft controlling custodian to the next. Examples of aircraft inventory material include bomb racks, guided missile launchers, and pylons/fairings, the removal of which could affect the structural or aerodynamic integrity of the aircraft. The items are generally referred to as parent racks and pylons.

b. Mission-Oriented Material. Mission-oriented material includes those AAE items and the accessory suspension equipment which are assigned to and maintained by Intermediate level maintenance activities. Mission-oriented material is maintained by Intermediate level maintenance activities to satisfy the specific Organizational mission requirements. Upon completion of the mission, mission-oriented material is returned to the Intermediate level maintenance activity, which performs any necessary maintenance actions or reconfiguration to satisfy the next mission requirement. During periods of extended operations material may remain in custody of Organizational levels until an inspection is due or the item fails to function properly. Mission-oriented material is generally issued to Organizational level users with store or stores attached (preloaded).

7.1.5 Applicability. This section applies to the AAE described below. Major AAE items are described in paragraphs 7.1.6 and 7.1.7.

7.1.6 Aircraft Bomb Racks. Bomb racks are AAE items which provide for the suspension, carriage, jettison, and release of ordnance items from the aircraft. Most bomb racks are installed semi-permanently on an aircraft and are referred to as parent racks. Bomb racks are generally classified as ejection or free-fall. A free-fall bomb rack allows the ordnance item to fall from the rack when all the requirements of the launch sequence have been satisfied, while release from an ejector type bomb rack is accomplished by the firing of a cartridge actuated device which then ejects the item or items. Figure 7-1-1 provides a listing of the bomb racks currently in use and identifies their application and the type of release mechanism employed. A brief description of the bomb racks is provided in paragraphs 7.1.6.1 through 7.1.6.17.

7.1.6.1 Aero 7A and Aero 7B Bomb Ejector Racks. The Aero 7A bomb ejector rack is a parent ejector rack which employs two sets of suspension hooks, one pair for 14 inch and one pair for 30 inch suspension stores. The Aero 7A bomb rack utilizes a safety pin to prevent inadvertent weapon or store release. When installed, the safety pin actuates a micro switch to electrically interrupt the firing circuit, grounds the breech caps, and mechanically prevents the ejector hooks from opening. Inspection windows over each set of hooks provide visual evidence of sear positioning for a positive hook-locked indication. The Aero 7B bomb ejector rack is also a parent ejector rack. The Aero 7B bomb ejector rack, although similar to the Aero 7A in operation, is 2 inches shorter in height and the dual breech mechanism is side-mounted to provide additional deck clearance for loaded stores on the fuselage centerline station on the EA-6B aircraft.

7.1.6.2 BRU-12A/A Bomb Rack. The BRU-12A/A bomb rack is a parent rack which may be mounted in the bomb bay of all models of the P-3 aircraft.

7.1.6.3 BRU-14/A Bomb Rack. The BRU-14/A bomb rack is a parent rack which provides for suspension and release of stores weighing up to 2,000 pounds. Two suspension hooks provide for attachment of weapons or stores having 14 inch suspension lugs. Aero 1A and Aero 1B adapter assemblies may be added to increase the bomb rack to 30 inch suspension capacity. The BRU-14/A is a modified Aero 65A bomb rack which has been adapted for use with P-3C and H-60 series aircraft. Major components consist of a Linear Electro-Mechanical Actuator (LEMA) and an In-Flight Operable Bomb Rack Lock (IFOBRL) auxiliary release assembly. The

PARENT RACK	TYPE	AIRCRAFT
Aero 7A/7B	Ejector	EA-6B
BRU-12A/A	Free-Fall	P-3C
BRU-14/A	Free-Fall	P-3C, H-60B/F/H/R
BRU-15/A	Free-Fall	P-3C
BRU-22/A, 23/A	Ejector	AH-1W
BRU-32 Series	Ejector	F/A-18A-F, E/A-18G
BRU-36 A/A, B/A	Ejector	AV-8B
BRU-59/A	Ejector	AH-1W, AH-1Z, UH-1N (with IDAS), and UH-1Y
BRU-65/A	Ejector	MH-60S
ERU-119	Ejector	T-45
Talley Rack	Ejector	AH-1W
ACCESSORY SUSPENSION EQUIPMENT	**TYPE**	**AIRCRAFT**
BRU-33A/A	Ejector	F/A-18A-F
BRU-38/A	Free-Fall	T-45
BRU-41 (IMER)	Ejector	F/A-18A-F
BRU-42 (ITER)	Ejector	AV-8B, F/A-18A-F
BRU-55 Series	Ejector	F/A-18A-F
BRU-61/A	Ejector	F-35
BRU-70 (DITER)	Ejector	AV-8B
ADAPTERS	**TYPE**	**AIRCRAFT**
AERO-1A	Free-Fall	P-3C
AERO-1B	Free-Fall	P-3C
ADU-299	N/A	EA-6B, AV-8B, H-60B/F/H/R
ADU-830/A	Free-Fall	AV-8B

Figure 7-1-1. Bomb Racks

LEMA consists of a spring-loaded plunger that is mechanically cocked and electrically released to provide the force that initiates hook release. The auxiliary release assembly provides a secondary method of release should the LEMA or its electrical system fail. The IFOBRL mechanism consists of a remotely controlled bomb rack lock and emergency release auxiliary unlock.

7.1.6.4 BRU-15/A Bomb Rack. The BRU-15/A parent bomb rack is a modification of the BRU-14/A bomb rack. The BRU-15/A bomb rack is used on the wing stations of the P-3C aircraft in conjunction with the aircraft wing store launcher assembly modified to launch a HARPOON missile and other authorized stores. Aero 1A and Aero 1B adapter assemblies may be attached to increase the bomb rack to 30 inch suspension capability.

7.1.6.5 BRU-22/A and BRU-23/A Bomb Ejector Racks. The BRU-22/A and BRU-23/A bomb ejector racks are used on the AH-1W aircraft. The BRU-22/A bomb ejector rack is mounted on the inboard port side and the BRU-23/A bomb ejector rack is mounted on the inboard starboard side of the aircraft respectively.

7.1.6.6 BRU-32 Series Bomb Ejector Rack. The BRU-32 series bomb ejector rack is a parent rack which provides for the carriage of single stores, accessory racks, and missile launchers. The BRU-32 is fitted with both 14 and 30 inch suspension hooks. The BRU-32 features a safety interlock and automatic swaybracing. Sensing switches are incorporated to provide bomb rack status information (loaded or unloaded) to the cockpit. The primary ejection unit uses two cartridges to generate gas pressure for rack operation. The auxiliary release unit uses one cartridge, which opens the hooks should the primary ejection mode fail allowing the store to free fall from the aircraft.

7.1.6.7 BRU-33A/A Canted Vertical Ejector Rack (CVER). The BRU-33 is an accessory rack which attaches to the parent BRU-32 bomb ejector rack and is used to carry two stores weighing up to 1,000 pounds each. Each ejection unit utilizes a 14 inch suspension hook and provides a special safety interlock and automatic swaybracing. The special safety interlock mechanically prevents the ejection units from opening. The BRU-33A/A CVER incorporates ejector units which are canted 5 degrees outboard to accommodate large diameter stores.

7.1.6.8 BRU-36A/A and BRU-36B/A Bomb Ejector Rack. The BRU-36 bomb ejector rack is a parent rack which provides for the carriage of single stores, Improved Triple Ejector Racks (ITERs), or missile launchers using 14 inch suspension hooks. Features of the BRU-36 include a safety interlock and variable ejection force control. The safety interlock mechanically prevents opening of the rack and also locks and unlocks the rack during loading operations. Adjuable swaybraces are also incorporated to brace stores, racks, and launchers. Sensing switches are incorporated to indicate to the stores management processor that a store is aboard or has been released. The BRU-36B/A uses Zero Retention Force (ZRF) arming units and incorporates new brackets to hold the ZRFs.

7.1.6.9 BRU-38/A Bomb Ejector Rack. The BRU-38/A bomb rack is used on the T-45 aircraft. It has six release units with a single hook designed to carry and release lightweight practice stores.

7.1.6.10 BRU-41 Improved Multiple Ejector Racks (IMERs) and BRU-42 ITERs. IMERs and ITERs are accessory suspension AAE which attach to a parent rack. Both the IMER and ITER consist of an adapter assembly (strong back), ejector units (three on an ITER, six on an IMER), a wiring harness, and an aircraft hardware adapter kit. The ITER is capable of carrying three stores and the IMER can carry as many as six stores attached to the ejector units. Each ejector unit has four adjustable swaybraces and two mechanically locking suspension hooks spaced 14 inches apart. Each ejector unit is equipped with a safety stop lever located on the rear sway-brace assembly which, when rotated to the locked position, prevents accidental stores release. The IMER (BRU-41) and ITER (BRU-42) have replaced the MER (A/A37B-6E) and TER (A/A37B-5E). These racks incorporate internal modifications that improve bomb rack reliability and maintainability. The IMER and ITER also incorporate an electronic control unit which controls all bomb rack functions.

7.1.6.11 BRU-55 Series Bomb Ejector Rack. The BRU-55 series is an aircraft ejector rack that provides side-by-side carriage and release of two MIL-STD-1760 1,000 pound class "smart" weapons utilizing 14 inch suspension. The BRU-55 series provides carriage and release of 1760 and non-1760 1,000 pound class weapons.

7.1.6.12 BRU-59/A Bomb Ejector Rack. The BRU-59/A bomb rack is used on AH-1Z, UH-1N (with IDAS), and UH-1Y aircraft. It is designed to carry and eject 1000 pound class stores and utilizes 14 inch suspension hooks.

7.1.6.13 BRU-61/A Bomb Ejector Rack. The BRU-61/A is an aircraft ejector rack that provides carriage and release of miniature munitions. The BRU-61/A has provisions for 14 or 30 inch suspension for attaching to aircraft parent rack. For carriage on F-35 aircraft, the BRU-61/A is attached to an adapter and then mounted in the internal weapons bay. The BRU-61/A consists of four pneumatic pressure ejectors for carriage of 14 inch suspension miniature munitions. A MIL-STD-1760 connector is located on the top of the BRU-61/A to provide interface with the host aircraft. Four joint miniature munitions interface cables provide interface between munitions and BRU-61/A.

7.1.6.14 BRU-65/A Bomb Ejector Rack. The BRU-65/A bomb rack is used on the MH-60 aircraft. It is designed to carry and eject 1000 pound class stores and utilizes 14 inch suspension hooks.

7.1.6.15 BRU-70/A Digital Improved Triple Ejector Rack (DITER). The BRU-70/A has three ejector units that can carry MIL-STD-1760 or conventional stores weighing up to 500 lbs each or two stores weighing up to 1000 lbs each. Store suspension is 14 inches. Each ejector unit has forward and aft ZRF arming units. Electrical fuzing and positive arming latches are also provided. Mounts to aircraft parent rack via two 14 inch suspension lugs and one interface cable.

7.1.6.16 ERU-119 Ejector Release Unit. The ERU-119 is used on the T-45 aircraft. It is designed to carry and eject stored up to 2,250 pounds.

7.1.6.17 Talley Rack. The Talley Rack is a parent rack attached to the outboard stations of the AH-1W aircraft, they provide for the attachment and carriage of TOW missile launchers

and external weapons and stores with 14 inch suspension. The Talley rack is attached to the aircraft by means of a hydraulic actuated mounted bracket. When TOW Missile Launchers (TML) are attached, the mounting bracket articulates the Talley rack which enables movement of the TML to aid in target acquisition. Each Talley rack consists of a housing assembly that contain the electrical wiring, ejector breeches and mechanical linkage that are activated when the dual cartridges are fired. The Talley rack also contains electro-mechanical arming units, and four adjustable swaybraces.

7.1.7 Guided Missile Launchers. Guided missile launchers provide for the carriage and release of guided missiles from an aircraft. They provide the mechanical and electrical interface between the aircraft and the air launched missile. Guided missile launchers are categorized as either ejection type or rail launchers. Ejection type launchers utilize gas pressure generated by cartridges fired in the launcher breeches to physically separate the missile from the aircraft. The missile motor is then ignited at a predetermine distance below the aircraft. Rail launchers are normally carried on the wing stations. Rail launchers enable the missile motor to be activated while the missile is still attached to the launcher. After motor fire, the thrust generated by the motor overcomes the missile restraining device and the missile separates from the aircraft. The tube launcher is a variant of the rail launcher. Tube type launchers contain the missile in launcher tubes until the missile motor is ignited. The missile then fires from the tube in a manner similar to firing aircraft-mounted rockets. Figure 7-1-2 provides a listing of the guided missile launchers currently in use and identifies their application and the type of release mechanism employed.

7.1.7.1 LAU-7 Series Guided Missile Launcher. The LAU-7 launcher provides a complete launching system for the AIM-9 series SIDEWINDER missile. Any LAU-7 variant can be used for carriage of the AIM-9M SIDEWINDER missile. The LAU-7D/A, E/A and F/A variants provide the MIL-STD-1760 interface required for carriage and launch of the AIM-9X SIDEWINDER. The LAU-7C/A, E/A and F/A variants contain a Pure Air Generating System (PAGS) to supply the required cooling for AIM-9M SIDEWINDER. The LAU-7B/A-1 and D/A require a nitrogen receiver to supply cooling for AIM-9M missiles and for launcher mass property requirements.

7.1.7.2 LAU-115 Series Guided Missile Launchers. The LAU-115 is a rail launcher designed for carriage and launch of AIM-7 missiles from F/A-18 aircraft. The launcher is suspended from the BRU-32 bomb rack on wing stations. Two LAU-127 launchers may be attached to the sides of the LAU-115 for carriage of AIM-9 or AIM-120 missiles.

7.1.7.3 LAU-116/A, LAU-116A/A, and LAU-116B/A Guided Missile Launchers. The LAU-116/A launcher provides for the carriage and launch of the AIM-7 series SPARROW missile from the F/A-18A/B aircraft. The LAU-116A/A also provides for carriage and launch of AIM-120 AMRAAM missiles from F/A-18C/D aircraft. The LAU-116B/A is also capable of launching the AIM-120 AMRAAM missile and is used on F/A-18E/F aircraft. Two launchers, one left hand and one right hand, are installed in the underside of the aircraft. The launchers are recessed in cavities within the aircraft fuselage, allowing the missiles to be semi recessed for aerodynamic purposes. All versions of the LAU-116 are ejection launchers.

LAUNCHER	MISSILE	TYPE	AIRCRAFT
LAU-7 Series	AIM-9M SIDEWINDER (except 9X) and Instrumentation Pods	Rail	AH-1W, AH-1Z, AV-8B, F/A-18A-D
LAU-7D/A, E/A, F/A	AIM-9X SIDEWINDER	Rail	F/A-18C/D/E/F
LAU-115 Series	AIM-7 SPARROW	Rail	F/A-18A-F
LAU-116 Series	AIM-7 SPARROW/ AIM-120 AMRAAM	Ejector	F/A-18A-F, EA-18G
LAU-117/A(V)2/A	AGM-65 MAVERICK	Rail	AV-8B, F/A-18A-F, P-3C
LAU-118(V)1/A	AGM-88 HARM	Rail	EA-6B, F/A-18A-F, EA-18G
LAU-118/A	AGM-88E AARGM	Rail	EA-6B, F/A-18A-F, EA-18G
LAU-127 Series	AIM-120 AMRAAM/AIM-9M/ AIM-9X SIDEWINDER	Rail	AV-8B, F/A-18A-F, EA-18G
M272	AGM-114 HELLFIRE	Rail	AH-1W
M279	AGM-114 HELLFIRE	Rail	AH-1W
M299	AGM-114 HELLFIRE	Rail	H-60B/F/H/R/S, AH-1Z
TML	BGM-71A TOW	Tube	AH-1W

Figure 7-1-2. Guided Missile Launchers

7.1.7.4 LAU-117/A(V)2/A Guided Missile Launcher. The LAU-117/A(V)2/A guided missile launcher is designed to carry and launch the AGM-65 MAVERICK missile. The LAU-117/A(V)2/A is delivered to the organizational level mated to the MAVERICK as a Preloaded Accessory Suspension Equipment (PASE) combination which is then attached to the aircraft's parent bomb rack. The LAU-117/A(V)2/A may be configured for either 14 or 30 inch suspension which is determined by the aircraft's parent bomb rack.

7.1.7.5 LAU-118(V)1/A Guided Missile Launcher. The LAU-118/A guided missile launcher provides the mechanical and electrical interface between the aircraft and the AGM-88B/C/E HARM/AARGM missiles. The LAU-118/A is delivered to the organizational level mated to the HARM/AARGM missile as a PASE combination which is then attached to the aircraft's parent bomb rack. The LAU-118/A is configured with 30 inch suspension.

7.1.7.6 LAU-127 Series. The LAU-127 series is a rail launcher designed for carriage and launch of AIM-120, AIM-9 or AIM-9X missiles from F/A-18C/D/E/F aircraft. The LAU-127 F/A is a High Pressure Pure Air Generator (HIPPAG) equipped launcher to be used on the F-18E/F.

7.1.7.7 M272/M279/M299 Guided Missile Launchers. The M272 and M299 guided missile launchers provide carriage and launch of up to four HELLFIRE missiles. The M279 guided missile launcher provides carriage and launch of two HELLFIRE missiles. The M272 and M279 are attached to the parent bomb rack of the AH-1 aircraft. The M299 is attached to the parent rack of the AH-1Z and H-60 series aircraft.

7.1.7.8 TOW Missile Launcher. The TOW missile launcher is used on the AH-1 series aircraft to carry and launch the TOW missile. The launcher carries two missiles, one on each side of its main frame, secured in position by a hinged center gate. The launchers can be mounted two high to provide a total of four missiles on each side of the aircraft. The launcher keeps the missiles electronically isolated from the aircraft armament system until the pilot initiates the launch command. The launcher is fitted with a debris director assembly, designed to direct the missile launch debris away from the aircraft rotor blades.

7.1.8 Adapters. Adapters are AAE items which are mated to aircraft bomb racks or missile launchers to allow carriage, launch and jettison capability from the aircraft parent rack through electrical and mechanical interfaces.

7.1.8.1 ADU-299 Adapter. ADU-299 series adapters are suspended from 14 or 30 inch ejector type bomb racks. They are used to interface a LAU-7 missile launcher to an aircraft.

7.1.8.2 Aero 1 Bomb Rack Adapters. The bomb rack adapter assemblies consist of an Aero 1A front adapter and an Aero 1B rear adapter. Both assemblies consist of a housing, hook, and link assembly that is permanently adjusted so that the linkage of the bomb rack adapter assembly can be locked into place on the appropriate bomb rack hook. The bomb rack adapter assembly can be attached to both BRU-14 and BRU-15 series bomb racks.

7.1.9 Maintenance Philosophy. The maintenance philosophy for aircraft inventory material and mission-oriented AAE is described below.

7.1.9.1 All guided missile launchers and bomb racks require maintenance at Organizational and Intermediate levels and most require maintenance at the Depot level. The depth of maintenance

and repair to be performed at Fleet levels is determined by factors such as available manpower, skill levels, complexity, support equipment requirements, parts and cost. Newer armament equipment is designed to be fully maintainable at Intermediate levels, and some require Depot repair only on major assemblies. Maintenance plans outline the authorized repairs and required maintenance tasks, frequencies and levels, and are the basic source documents for NAVAIR technical manuals. Source, Maintenance and Recoverability (SM&R) codes are assigned to the end item launcher or bomb rack and to major assemblies and piece parts within the end item. These codes are listed in the Illustrated Parts Breakdown (IPBs) section of each technical manual and readily tell the user if the part/assembly is stocked, manufactured or assembled at which maintenance level; who uses the item, repairs the item, and has disposal authority.

7.1.9.2 Aircraft Inventory. Aircraft Inventory Items (parent bomb racks or launchers) remain installed in squadron aircraft until scheduled or unscheduled maintenance is required, at which time the item is removed and sent to Intermediate level for inspection and repair. Mission oriented items for all supported squadrons are maintained at the Intermediate level armament equipment pool until called for to fill Organizational level mission requirements. Squadrons retain custody until the item is no longer required or a failure occurs. Intermediate level inspects, repairs, tests, and reissues or places the item in ready for service storage.

7.1.9.3 All maintenance is performed in accordance with the approved Maintenance Instruction Manuals (MIMs) and Maintenance Requirement Cards (MRCs) (NAVAIR 4790/3) developed for each unique application of the item. MRCs are an element of the phased maintenance program and provide the instructions for efficient performance of scheduled maintenance tasks. Each MRC contains the tasks relating to a particular system, subsystem, area, or component, using a logical sequence for accomplishment. MRCs identify the recommended rating or military occupation specialty, performance interval, and the work area involved. MRCs also identify support equipment, consumables, replacement parts, and assistance requirements for task performance. Illustrations, clearances, tolerances, charts, part numbers, and other pertinent information are included where necessary. MRCs do not include instructions for repair, or calibration, or procedures for correcting defective conditions. Figure 7-1-3 lists the applicable authorized AAE technical publications.

7.1.10 Equipment History Record (EHR) Cards.

7.1.10.1 An EHR card (OPNAV 4790/113) accompany each AAE item and serve as the administrative means of providing managers with AAE status, operational history, modification, configuration, and transfer and receiving accounting data.

7.1.10.2 EHR Cards. EHR cards provide a method of monitoring specific maintenance data on designated aeronautical components and equipment. An individual EHR card is maintained for each serialized item as part of the logbook, Aeronautical Equipment Service Record (AESR), and Module Service Record (MSR) while the component is installed. When the component is removed from the aircraft or equipment, the EHR card will be attached to and accompany the component to its final destination. EHR cards that pertain to those items that are constantly being removed or installed for the purpose of aircraft mission configuration, may be maintained at the Intermediate level and need not accompany the item during temporary squadron use. Logbook and AESR and inventory record entries are not required.

Aircraft Armament Equipment	Aircraft Application	NAVAIR Loading Manual	Maintenance Instruction Manual	IPB	Maintenance Level		
					O	I	D
ADU-299	EA-6B	01-85ADC-75	11-75A-59	X		X	
	AV-8B	A1-AV8BB-LWS-000					
	SH-60B	A1-H60BB-LWS-000					
	SH-60F	A1-H60CA-LWS-000					
	HH-60H	A1-H60CA-LWS-000					
	MH-60R	A1-H60RA-LWS-000					
	MH-60S	A1-H60SA-LWS-000					
	P-3C	01-75PAC-75	11-5E-17	X	X	X	X
ADU-830/A	AV-8B	A1-AV8BB-LWS-000	11-75A-641	X	X	X	X
Aero 1A, 1B	EA-6B	01-85ADC-75	11-5D-20	X	X	X	X
Aero 7A/7B series	P-3C	01-75PAC-75	11-5C-23	X	X	X	X
BRU-12/A	P-3C	01-75PAC-75	11-5E-18	X	X	X	X
BRU-14/A	SH-60B	A1-H60BB-LWS-000					
	SH-60F	A1-H60CA-LWS-000					
	HH-60H	A1-H60CA-LWS-000					
	MH-60R	A1-H60RA-LWS-000					
	P-3	01-75PAC-75	11-5E-18	X	X	X	X
BRU-15A	AH-1W	01-H1AAC-75	11-75-73	X	X	X	X
BRU-22/A, -23/A	F/A-18A-D	A1-F18AE-LWS-000	11-75A-26	X		X	
BRU-32 series	F/A-18E-F	A1-F18EA-LWS-000					
	F/A-18A-D	A1-F18AE-LWS-000	11-75A-27	X		X	
BRU-33A/A	F/A-18E-F	A1-F18EA-LWS-000					
	AV-8B	A1-AV8BB-LWS-000	11-75A-36	X	X	X	
BRU-36 series	T-45	A1-T45AB-LWS-000	11-75A-58	X	X	X	X
BRU-38	F/A-18	A1-F18AE-LWS-000	11-75A-603	X	X	X	X
BRU-41 (IMER)	F/A-18E-F	A1-F18EA-LWS-000					
	AV-8B	A1-AV8BB-LWS-000	11-75A-603	X	X	X	X
BRU-42 (ITER)	F/A-18A-D	A1-F18AE-LWS-000					
	F/A-18E-F	A1-F18EA-LWS-000					
	F/A-18A-D	A1-F18AE-LWS-000	11-75A-56	X		X	
BRU-55 series	F/A-18E-F	A1-F18EA-LWS-000					
	AH-1Z	01-H1AAD-75	11-75A-55	X	X	X	X
BRU-59/A	UH-1Y	01-110HCG-75					
BRU-61*	MH-60S	A1-H60SA-LWS-000	11-75A-51	X	X	X	
BRU-65/A							
BRU-70 (DITER)	AV-8B	A1-AV8BB-LWS-000	11-75A-604	X	X	X	X

NOTES:

*Navy Technical Manual in process.

Figure 7-1-3. Technical Manual Matrix

Aircraft Armament Equipment	Aircraft Application	NAVAIR Loading Manual	Maintenance Instruction Manual	IPB	Maintenance Level		
					O	I	D
ERU-119	T-45	A1-T45AB-LWS-000	11-75AA-46	X	X	X	X
LAU-7	AV-8B	A1-AV8BB-LWS-000	11-75A-54	X	X	X	X
	AH-1W	01-H1AAC-75					
	F/A-18A-D	A1-F18AE-LWS-000					
	F/A-18E-F	A1-F18EA-LWS-000					
	SH-60B	A1-H60BB-LWS-000					
	SH-60F	A1-H60CA-LWS-000					
	HH-60H	A1-H60CA-LWS-000					
	MH-60R	A1-H60RA-LWS-000					
LAU-115 series	F/A-18A-D	A1-F18AE-LWS-000	11-75A-115	X		X	X
	F/A-18E-F	A1-F18EA-LWS-000					
LAU-116	F/A-18A-D	A1-F18AE-LWS-000	11-75A-116	X		X	X
	F/A-18E-F, EA-18G	A1-F18EA-LWS-000					
LAU-117	AV-8B	A1-AV8BB-LWS-000	11-75A-79	X		X	X
	F/A-18A-D	A1-F18AE-LWS-000					
	F/A-18E-F	A1-F18EA-LWS-000					
	P-3C	01-75PAC-75					
LAU-118	F/A-18A-D	A1-F18AE-LWS-000	11-75A-78	X		X	
	F/A-18E-F, EA-18G	A1-F18EA-LWS-000					
LAU-127	AV-8B	A1-AV8BB-LWS-000	11-75A-79	X		X	
	F/A-18A-D	A1-F18AE-LWS-000	11-75A-514				
	F/A-18E-F, EA-18G	A1-F18EA-LWS-000					
Talley Rack	AH-1W	01-H1AAC-75	11-5E-19	X	X	X	X
TOW MSL LCHR	AH-1W	01-H1AAC-75	11-75A-90	X	X	X	
M272/M279 HELLFIRE MSL LCHR	AH-1W	01-H1AAC-75	11-75A-272	X	X	X	
M299 HELLFIRE	SH-60B	A1-H60BB-LWS-000	11-75A-299	X	X	X	
	AH-1Z	01-H1AAD-75	11-75A-299	X	X	X	X
MSL LCHR	SH-60F	A1-H60CA-LWS-000					
	HH-60H	A1-H60CA-LWS-000					
	MH-60R	A1-H60RA-LWS-000					
	MH-60S	A1-H60SA-LWS-000					

Figure 7-1-3. Technical Manual Matrix - contd.

7.1.10.3 The EHR card provides a complete history of the AAE. The EHR card reflects all maintenance actions that have been performed during the AAE item's life cycle at each maintenance level. These records are maintained at the maintenance level that has current custody of the AAE and are transferred with the AAE. The EHR card for all AAE will be maintained in accordance with the applicable authorized MIM. Completed EHR cards shall be transferred to the PMA-201 AAE TPO located at DODAAC N69311, 4422 Bragdon Street, Indianapolis, IN. 46226.

7.1.11 Record Keeping and Reporting.

7.1.11.1 AAE is Fleet-controlled material. AAE items are controlled and tracked by AAE pool custodians assigned by the Type Commander (TYCOM). All Weapons Information System (AWIS) reporting requirements of AAE asset transactions serve to keep these inventory managers informed as to asset numbers, locations, attrition, and shortfalls. In turn, these commands report consolidated asset status data as directed by the TYCOM. The website for AAE reporting is located on the AWIS central website at https://awis.navair.navy.mil.

7.1.11.2 The AAE pool custodians will report all AAE inventories, transactions and condition status via the AWIS website AAE module at https://awis.navair.navy. mil. In the event that the AWIS website is not available the pool custodian will contact the TYCOM for reporting procedures and requirements.

CHAPTER 7.2

Organizational Level Maintenance

Table of Contents

Paragraph	Subject	Page
7.2.1	General	7-2-1
7.2.2	Organizational Level (O-Level) Maintenance Responsibilities	7-2-1

CHAPTER 7.2

Organizational Level Maintenance

7.2.1 General. This chapter discusses the maintenance actions assigned to the Organizational level (O-level) which are performed in support of the day-to-day operation of the unit. O-level maintenance is performed by Aviation Ordnance Technicians assigned to O-level maintenance activities. Volume I, Chapter 2.3 of this manual describes the objectives and structure of these activities. O-level maintenance directly supports and maintains the aircraft weapon system, which consists of the aircraft, airborne ordnance or ammunition, and associated Aircraft Armament Equipment (AAE).

7.2.2 Organizational Level (O-Level) Maintenance Responsibilities. O-level maintenance actions are tailored within the constraints of the O-level's manpower and maintenance capabilities to ensure that assigned AAE is properly maintained. O-level maintenance actions for AAE are associated with routine aircraft operations and include time and event phased inspections, cleaning, minor corrosion control and prevention, and servicing. The assigned maintenance actions are described generally in Paragraphs 7.2.2.1 through 7.2.2.12. All maintenance actions are to be performed in accordance with approved Maintenance Instruction Manuals (MIMs) and Maintenance Requirement Cards (MRCs) (NAVAIR 4790/3) which have been developed for each unique application of the AAE item.

7.2.2.1 Daily Inspections. O-level maintenance personnel perform daily inspections on aircraft and aircraft-installed armament equipment. Daily inspections ensure that all AAE on an aircraft is correctly installed and that all associated components, such as pylons, cables, and adapters, are present and properly configured.

7.2.2.2 Periodic Inspections. O-level Aviation Ordnance personnel perform periodic AAE inspections at intervals determined either by time or by equipment usage. Periodic inspections are conducted at intervals specified in the applicable authorized planned maintenance system publications, which consist of checklists, MRCs (NAVAIR 4790/3), Periodic Maintenance Information Cards (PMICs), and sequence control charts and cards established by direction of Commander, Naval Air Systems Command (COMNAVAIRSYSCOM). The publications provide a basis for planning, scheduling, and complying with scheduled maintenance requirements. The requirements are scheduled with intervals such as calendar time, flight or operation hours, or number of cycles or events based on the predominant failure mode. By inspecting items at frequent intervals, corrosion and wear can be controlled and minor problems can be corrected before they become major problems.

7.2.2.3 Conditional Inspections. O-level Aviation Ordnance personnel perform conditional inspections when required due to a specific condition defined in the applicable authorized aircraft and suspension equipment MIM. Examples include inspections required if an item is mishandled or if an ejector rack is fired on the deck with the safety pin installed, or if a bomb rack is overloaded/overstressed. During conditional inspections, ordnance personnel check for cracks, bends, or other damage to the AAE item. If inspection indicates that major damage has occurred, the AAE must be sent to the Intermediate level maintenance activity.

7.2.2.4 Testing and Troubleshooting. When there is an apparent failure of an AAE item, O-level Aviation Ordnance personnel troubleshoot the affected system to determine the cause of the failure. Troubleshooting includes retesting of a bomb or missile release system, checking connectors and connections for proper mating, checking a system for broken or loose wiring, or checking an internal component for proper operation. If the fault cannot be isolated and repaired, the affected AAE item must be removed from the aircraft and sent to Intermediate level maintenance for repair. All troubleshooting actions are conducted in accordance with the applicable authorized aircraft and suspension equipment MIMs.

7.2.2.5 Minor Repair. O-level Aviation Ordnance personnel perform minor repairs on AAE items to correct problems identified during troubleshooting or inspection. Minor repairs include replacement of failed parts that can be changed without extensive disassembly of the item such as arming units, breeches, and ejector pistons. Minor repair is conducted in accordance with the applicable authorized aircraft and suspension equipment MIMs.

7.2.2.6 Corrosion Prevention and Control. O-level personnel perform routine corrosion prevention and control procedures on AAE items in squadron custody. Minor corrosion discovered during inspections can be removed using the preventive maintenance procedures found in applicable maintenance manuals and NAVAIR 01-1A-75. Any AAE item displaying evidence of rough handling, damage, or major corrosion shall be removed and sent to Intermediate level maintenance.

7.2.2.7 Aircraft and AAE Preparation and Inspection. Prior to any loading evolution, the AAE must be prepared and inspected in accordance with the procedures contained in the applicable airborne weapons and stores loading manual for each aircraft.

7.2.2.8 Release and Control System Checks. Organizational Integrated Weapons Team (IWT) members shall perform release and control system checks on AAE prior to weapons or stores loading, or after reconfiguration of the aircraft, and after any malfunction in the release and control system. Procedures for performing release and control system checks are contained in the applicable authorized airborne weapons or stores loading manual for each aircraft.

7.2.2.9 Technical Directives. O-level Aviation Ordnance personnel are responsible for assuring Aviation Armament Bulletins (AABs) or Aviation Armament Changes (AACs) directed to the O-level are complied with and correctly documented on the appropriate OPNAV form.

7.2.2.10 Deficiency Reports. Deficiency reports are initiated at the O-level when a deficiency is discovered. Deficiency reporting procedures are contained in Volume I, Chapter 4.6 and OPNAVINST 5102.1D.

7.2.2.11 Inventory Reporting. Organizational level pool custodians will maintain current status on all AAE inventories, transactions and condition status via the All Weapons Information System (AWIS) website AAE module at https://awis.navair.navy.mil. In the event that the AWIS website is not available, the O-level activity will submit written AAE reports to their supporting Intermediate level activity as needed to maintain the accuracy of the database.

7.2.2.12 Equipment History Record (EHR). Each AAE item has an accompanying EHR card which documents the complete history of the item. The document is used to record all maintenance actions performed on the AAE item at each maintenance level and to record the comple-

tion of scheduled maintenance and applicable directives. The records are maintained by the maintenance activity having custody of the AAE and are transferred with the item. Completed EHR cards shall be transferred to the PMA-201 AAE TPO located at DODAAC N69311, 4422 Bragdon Street, Indianapolis, IN. 46226.

CHAPTER 7.3

Intermediate Level Maintenance

Table of Contents

Paragraph	Subject	Page
7.3.1	General	7-3-1
7.3.2	Intermediate Level (I-Level) Maintenance Responsibilities	7-3-1

CHAPTER 7.3

Intermediate Level Maintenance

7.3.1 General. This chapter describes the maintenance actions assigned to Intermediate Maintenance Activities (IMA). Intermediate level (I-level) maintenance is authorized and designated to be performed by Fleet Readiness Centers (FRC), Shipboard Weapons Departments, and Marine Corps Air Stations (Station Weapons). All IMAs shall perform I-level maintenance functions on supported Aircraft Armament Equipment (AAE) as described in Volume I, Section 2 of this manual.

7.3.2 Intermediate Level (I-Level) Maintenance Responsibilities. IMAs perform higher level maintenance actions on AAE in support of the O-level. I-level maintenance for AAE includes those inspection, repair, and technical directive incorporation functions which are beyond the organizational level's capability, but which do not necessitate Depot level support. All maintenance actions are to be performed in accordance with the applicable authorized Maintenance Instruction Manuals (MIMs) shown in Chapter 7.1 of this section, and NAVAIR 01-1A-75. AAE inducted into an IMA must be inspected immediately to ensure that all cartridges and nitrogen receivers have been removed and that the AAE is completely safe. The receiving IMA must also ensure Equipment History Record (EHR) cards received with the AAE are current and accurate. Paragraphs 7.3.2.1 through 7.3.2.13 describe those maintenance actions that the IMAs are responsible for performing on the AAE listed in Chapter 7.1. The specific AAE technical manual provides detailed configuration/electrical and mechanical test requirements.

7.3.2.1 Special Inspections. I-level maintenance personnel perform special AAE inspections at intervals determined either by time or by equipment usage. Special inspections are conducted at intervals specified in the applicable authorized aircraft or suspension equipment planned maintenance system publications, which include checklists, Maintenance Requirement Cards (MRCs) (NAVAIR 4790/3), Periodic Maintenance Information Cards (PMICs), and sequence control charts and cards established by direction of the Commander, Naval Air Systems Command (COMNAVAIRSYSCOM). These publications provide a basis for planning, scheduling, and complying with scheduled maintenance requirements. The requirements are scheduled with intervals such as calendar time, flight or operation hours, or number of cycles or events based on the predominant failure mode. When an item of AAE becomes due for a special inspection that is beyond the capability of Organizational level maintenance, the AAE item is removed from the aircraft and sent to the IMA which inducts the item and performs the required inspection. Reinspection due dates for items sent to IMA for special inspections shall be based upon the completion date of the initial maintenance action.

7.3.2.2 Conditional Inspections. I-level maintenance personnel perform conditional inspections when a specific condition exists, as defined in the applicable equipment MIM. During conditional inspections, I-level maintenance personnel check for damage and other deficiencies that may have occurred.

7.3.2.3 Corrosion Prevention and Control. I-level maintenance personnel perform routine corrosion prevention and control actions in accordance with the NAVAIR 01-1A-75. Corrosion control actions at I-level maintenance include stripping of external paint, corrosion control treatment of metal surfaces, priming, painting, and restenciling. Prior to shipment or storage of AAE, it must be prepared and packaged in accordance with the applicable authorized MIM. The EHR shall be filled out and attached to the equipment.

7.3.2.4 Preservation. All Ready For Issue (RFI) and Non Ready For Issue (NRFI) AAE shall be properly packaged and preserved at all IMAs when not used/issued for a period of 30 days or more. IMA Ordnance Officers may authorize deviation from this policy, when known operational requirements exist (not to exceed 90 days). Preservation entry shall be made by IMA personnel in Section IV of the EHR. Item part number and serial number shall be annotated on a RFI tag and attached to the outside of the barrier paper. AAE in the custody of a prime custodian is accumulating time for calendar inspection unless properly preserved for non-aging with corresponding Depot or I-level entry on the applicable EHR. AAE packaged/preserved by a prime custodian is considered to be in non-aging status. AAE in the custody of organizational level activities will be in an aging status for scheduled calendar inspections. All prime pool custodian's will establish and maintain wrapping, packaging and preservation capabilities/procedures for all applicable AAE. When feasible, AAE shall be preserved and packaged in accordance with applicable directives.

7.3.2.5 Testing and Troubleshooting. Testing and troubleshooting procedures are performed by I-level Aviation Ordnance personnel to determine the extent of maintenance and various repair actions required to return an AAE item to RFI status. Test and inspection criteria described in the applicable authorized aircraft and suspension equipment technical manual specify the procedures used to identify the nature and extent of any defects or damage to the AAE which would require repair actions to be performed. These procedures include visual inspections, electrical testing of circuits and components, and non-destructive testing using liquid penetrants, magnetic particles, or ultrasonic equipment to determine the structural integrity of an AAE item.

7.3.2.6 Repair. I-level Aviation Ordnance personnel perform repairs on AAE items found defective during testing, troubleshooting, or inspection. Major repairs include replacement of broken or worn parts, rewiring electrical harnesses, replacing electrical receptacles and plugs, and replacement of major system components. Most IMAs also have the capability of performing micro-miniature electronic repair functions on AAE items such as circuit boards, and other electronic components. All repair actions are conducted in accordance with the applicable authorized aircraft and suspension equipment MIM.

7.3.2.7 Equipment Configuration. Mission-oriented AAE and guided missile launchers, are maintained in an I-level maintenance rotatable pool. When a squadron turns in mission oriented AAE into their supporting I-level maintenance activity for maintenance, an RFI replacement item is removed from the pool, inspected, and configured with the appropriate adapter kits for the type of aircraft it will be installed on and issued to the organizational activity.

7.3.2.8 Electrical and Mechanical System Check. I-level Aviation Ordnance personnel perform systems checks to verify the proper electrical and mechanical operation of mission-oriented AAE before issue to an organizational level activity. Systems checks are performed by I-level Aviation Ordnance personnel using electronic test equipment to check electrical circuits and mechanical test

equipment such as hydraulic detent testers to test launcher restraint devices. Upon successful completion of required tests, the AAE is RFI to the user activity. All electrical and mechanical checks are performed in accordance with the applicable authorized MIM.

7.3.2.9 Technical Directives. I-level Aviation Ordnance personnel are responsible for assuring that Aviation Armament Bulletins (AABs) or Aviation Armament Changes (AACs) directed to the I-level are complied with and correctly documented on the appropriate OPNAV forms.

7.3.2.10 Inventory Reporting. I-level pool custodians will also maintain current status on all AAE inventories, transactions and condition status via the All Weapons Information System (AWIS) website AAE module at https://awis.navair.navy.mil. In the event that the AWIS website is not available, the pool custodian will liaison with the Type Commander for reporting procedures and requirements.

7.3.2.11 Deficiency Reports. Deficiency reports are initiated at the I-level when a deficiency is discovered. Deficiency reporting procedures are contained in Volume I, Chapter 4.6 and OPNAVINST 5102.1D.

7.3.2.12 Maintenance Data Reporting. The maintenance data system is a management information system designed to provide statistical data for use at all management levels. The maintenance data system was developed as an integral part of the Naval Aviation Maintenance and Material Management (AV-3M) system and provides the input to furnish data products which provide management tools for the efficient and economical management of maintenance organizations. When performing a maintenance action, I-level Aviation Ordnance personnel convert a narrative description of the job into codes and enter the coded information on standard forms or source documents. These source documents are collected and transmitted to a data services facility where the information is converted to machine records. The data services facility then uses the machine records to produce periodic report listings summarizing the submitted data. The reports are supplied to ordnance supervisors to provide assistance in planning and directing the maintenance effort. In addition, this information is forwarded to the Naval Supply Systems Command Global Logistics Support (NAVSUP GLS AMMO), which has been designated as the central data processing facility.

7.3.2.13 AAE Records. The EHR for each AAE item inducted into an I-level maintenance activity will be screened for currency and accuracy upon receipt of the item. All maintenance performed on the AAE item while in the custody of the IMA will be entered into the record for that item to include applicable technical directives. The record will be transferred with the AAE when it is returned to the supply system or sent to the Depot level maintenance activity. Completed EHR cards shall be transferred to the PMA-201 AAE TPO located at DODAAC N69311, 4422 Bragdon Street, Indianapolis, IN. 46226.

CHAPTER 7.4

Depot Level Maintenance

Table of Contents

Paragraph	Subject	Page
7.4.1	General	7-4-1
7.4.2	Assignment of Depot Level (D-Level) Responsibilities	7-4-1
7.4.3	Depot Level Maintenance Actions	7-4-1
7.4.4	Aircraft Armament Equipment (AAE) Records	7-4-1
7.4.5	Technical Directives (TDs)	7-4-2
7.4.6	Maintenance Data Reporting (MDR)	7-4-2

CHAPTER 7.4

Depot Level Maintenance

7.4.1 General. This chapter discusses the maintenance actions assigned to Depot level (D-level) maintenance activities. D-level activities perform maintenance on Aircraft Armament Equipment (AAE) that is beyond the maintenance capability of Intermediate maintenance activities. D-level activities support the Organizational and Intermediate levels by providing technical assistance in carrying out those functions which are beyond the responsibility or capability of Organizational level and Intermediate level activities through the use of more extensive facilities, skills, and materials. D-level functions are carried out in industrial establishments or in the field by personnel from such establishments. D-level industrial establishments may be government-owned/operated, government-owned and contractor-operated, or contractor-owned/operated.

7.4.2 Assignment of Depot Level (D-Level) Responsibilities. D-level maintenance activities perform higher level maintenance actions on AAE in support of the Organizational level and Intermediate level. D-level maintenance for AAE includes all those inspection, repair, and technical directive incorporation functions which are beyond the capability of Intermediate level maintenance. D-level maintenance personnel perform rework and renovation actions on AAE items to allow the items to complete or extend their service life.

7.4.3 Depot Level Maintenance Actions. Maintenance actions assigned to the Depot are:

a. Complete rework and overhaul of AAE items which are approaching or have reached the expiration of their designated service life, if such rework can economically extend the useful life of the items.

b. Major corrosion control work, including complete item disassembly, stripping of paint, corrosion treatment, reassembly, repainting, and restenciling of instructional data. Procedures for corrosion control are provided in NAVAIR 01-1A-75.

c. Hydrostatic testing of guided missile launcher nitrogen receivers.

d. Testing guided missile launcher internal gas system integrity.

e. Performing major retrofits in compliance with technical directives.

f. Provide support services functions, including engineering, technology, calibration services, and field teams to support Organizational and Intermediate level maintenance when required and directed.

7.4.4 Aircraft Armament Equipment (AAE) Records. Each AAE item is accompanied by an Equipment History Record (EHR) card. The EHR for each AAE item inducted into a D-level activity will be screened for completeness and accuracy upon receipt of the AAE item. All maintenance actions performed on the AAE item, while in the custody of the D-level maintenance activity, will be entered into the EHR card. The EHR card is transferred with the AAE

item when it is returned to the supply system. Completed EHR cards shall be transferred to the PMA-201 AAE TPO located at DODAAC N69311, 4422 Bragdon Street, Indianapolis, IN. 46226.

7.4.5 Technical Directives (TDs). D-level maintenance personnel are not only responsible for assuring that TDs, Aviation Armament Bulletins (AABs) and Aviation Armament Changes (AACs) are complied with, but they also assist in the development and verification of TDs that ultimately affect them. This assistance includes engineering change proposal review, development of the resulting TD, and verification prior to implementation of the TD.

7.4.6 Maintenance Data Reporting (MDR). The maintenance data system is a management information system designed to provide statistical data for use at all management levels. The maintenance data system for D-level maintenance was developed as an integral part of the Naval Aviation Maintenance and Material Management (AV-3M) system and provides the input to furnish data products which provide management tools for the efficient and economical management of maintenance organizations. When performing a job, D-level maintenance personnel convert a narrative description of the job into codes and enter the coded information on standard forms or source documents. The source documents are collected and transmitted to a data services facility where the information is converted to machine records. The data services facility then uses the machine records to produce periodic reports which summarize the submitted data. The reports are supplied to maintenance supervisors to provide assistance in planning and directing the maintenance effort. The information provided by the machine records is forwarded to the Navy Maintenance Support Office, Mechanicsburg, PA, which has been designated as the central data processing facility.

CHAPTER 7.5

Aircraft Armament Equipment (AAE) Planning Factors and Inventory Reporting

Table of Contents

Paragraph	Subject	Page
7.5.1	Introduction	7-5-1
7.5.2	Purpose	7-5-1
7.5.3	Scope	7-5-1
7.5.4	Background	7-5-1
7.5.5	General Responsibilities	7-5-1
7.5.6	Actions	7-5-2
7.5.7	Definitions	7-5-2
7.5.8	AAE Inventory Reporting Requirements and Responsibilities	7-5-2
7.5.9	AAE Planning Factors	7-5-3
7.5.10	AAE Asset Status Matrix	7-5-3
7.5.11	Attrition and Maintenance Pipeline Percentages	7-5-12
7.5.12	AAE Fleet Maintenance Pipeline	7-5-12

List of Illustrations

Figure	Title	Page
7-5-1	Sample NAVAIR Consolidated Inventory Report	7-5-4
7-5-2	AAE Planning Factors for EA-6B Aircraft	7-5-6

List of Illustrations - contd.

Figure	Title	Page
7-5-3	AAE Planning Factors for AV-8B Aircraft	7-5-6
7-5-4	AAE Planning Factors for F/A-18A-D Aircraft	7-5-7
7-5-5	AAE Planning Factors for F/A-18E-F Aircraft	7-5-7
7-5-6	AAE Planning Factors for EA-18G Aircraft	7-5-8
7-5-7	AAE Planning Factors for T-45 Aircraft	7-5-8
7-5-8	AAE Planning Factors for P-3C Aircraft	7-5-8
7-5-9	AAE Planning Factors for SH-60B, MH-60R, HH-60H and MH-60S Aircraft	7-5-9
7-5-10	AAE Planning Factors for AH-1W, AH-1Z Aircraft	7-5-9
7-5-11	AAE Planning Factors for UH-1 Aircraft	7-5-9
7-5-12	AAE Planning Factors for F-35 Aircraft	7-5-10
7-5-13	Format for AAE Net Asset Status Matrix LAU-7C/A Missile Launcher (Sample Only)	7-5-11
7-5-14	Attrition and Maintenance Pipeline Percentages	7-5-13
7-5-15	Sample Format for AAE Fleet Maintenance Pipeline	7-5-14

CHAPTER 7.5

Aircraft Armament Equipment (AAE) Planning Factors and Inventory Reporting

7.5.1 Introduction. Procurement objectives and inventory reporting requirements.

7.5.2 Purpose.

a. To specify the planned quantities of end item aircraft bomb racks and guided missile launchers required for U.S. Navy and Marine aircraft.

b. To specify Fleet Aircraft Armament Equipment (AAE) inventory reporting requirements.

c. To outline general policies for procurement and reprocurement of AAE.

7.5.3 Scope. Responsibilities assigned herein apply to the in-service inventory management of Type Commander controlled AAE.

7.5.4 Background.

a. The mission essential nature of AAE material dictates that ship and shore based inventories be maintained at specific levels based on the numbers of aircraft supported, their missions, roles and weapon capabilities. Out year requirements and attrition losses must be accurately predicted in order for realistic procurement planning and budgeting to take place.

b. AAE for new production aircraft is normally procured with the aircraft by the responsible aircraft program manager, in quantities dependant on the number of aircraft being delivered in a given fiscal year. Contractor furnished AAE is usually unique to a particular type aircraft and is normally delivered installed on the new aircraft.

c. Government furnished AAE required for production aircraft is procured separately and delivered to the aircraft manufacturer for further transfer to Fleet activities with the new aircraft.

d. New or reconfigured AAE may be required when existing aircraft acquire new weapon capabilities. In that event, the Program Manager (PM) responsible for the upgrade is responsible for budgeting for procurement of the new AAE, or the upgrade to existing AAE.

e. Reprocurement becomes necessary when inventory losses occur through attrition or age, or when material is damaged beyond economical D-level repair.

7.5.5 General Responsibilities.

a. AAE Technical Program Office (TPO), Indianapolis, IN stores excess and obsolete AAE, and certain AAE having foreign military applications. Reporting requirements for this material is separately governed.

b. NAVAIR PMA-201 will utilize the All Weapons Information System (AWIS) AAE Module for the worldwide inventory data as the basis for preparing the AAE status matrix. The matrix

will project the current inventory ten years into the future. The projected inventory will be weighed against the year aircraft populations to identify out year shortages or excesses. The most current model detail of the aircraft program data file is the sole source document to be used for planning out year program active aircraft inventories. Data contained in the U.S. Navy Aircraft Budget Exhibit A-II will be used to determine numbers of aircraft in roles other than tactical, training or research and development for which certain AAE may be required. The asset status matrix will be produced at least annually, or more often should circumstances warrant, and distributed to concerned officials.

c. When the AAE asset status matrix identifies an out-year shortage, PMA-201 will advise the cognizant type aircraft PM of the impending shortfall, in order for a timely procurement decision to be made.

d. When the AAE asset status matrix identifies Government Furnished Equipment (GFE) material in excess to operational requirements, as may occur when an aircraft model is being phased out of service, PMA-201 will advise production aircraft PMs that the excess may be made available in lieu of new procurement.

7.5.6 Actions.

a. Type Commanders shall continuously review the planning factors to ensure that the quantities of AAE listed are adequate to meet current operational needs. Recommended changes shall be submitted to Chief of Naval Operations (CNO) (N411), with copies to Commander, Naval Air Systems Command (COMNAVAIRSYSCOM) (PMA-201).

b. COMNAVAIRSYSCOM shall ensure planning factors and inventory report remain current by submitting recommended changes to CNO (N411) when technical directive incorporation affects part numbers, when emergent weapon capabilities add or change AAE requirements, or when an item is deleted for obsolescence.

7.5.7 Definitions.

a. AIRCRAFT ARMAMENT EQUIPMENT: Generic term for end item aircraft missile launchers and bomb racks.

b. AIRCRAFT MODEL: The complete designation of an aircraft, independent of its role, i.e., F-18E, AV-8B.

c. AIRCRAFT ROLE: The current use of an operational aircraft, i.e., tactical, trainer, patrol.

d. INVENTORY AAE: Those items of AAE that normally remain installed on an aircraft, i.e., BRU-32, BRU-36, LAU-116.

e. MISSION AAE: Those items of AAE that are installed on an aircraft for a specific mission purpose and normally removed on completion of that mission, i.e., LAU-118, BRU-33, BRU-42.

f. SUPPLY COGNIZANCE SYMBOL 4Z: 4Z COG material is comprised of war consumable external fuel tanks, in-flight refueling stores, aircraft guided missile launchers and aircraft bomb racks. AAE is budgeted for and procured by the COMNAVAIRSYSCOM, and maintained by Type Commander (TYCOM) controlled pools for use by assigned tactical squadrons.

7.5.8 AAE Inventory Reporting Requirements and Responsibilities.

7.5.8.1 Responsibilities. Squadrons and squadron-based detachments home based, deployed ashore or afloat report on hand quantities of Ready For Issue (RFI) AAE to their supporting

intermediate level armament equipment pool sub-custodian. Reserve squadrons and Marine Aircraft Groups (MAGs) at sites controlled by TYCOM other than Commander, Naval Air Reserve Force (COMNAVAIRESFOR) will retain inventory reporting requirements for Naval Reserve AAE assets. Physical custody of Naval Reserve AAE assets by the station armament equipment pool is permitted; however, reporting custody requirements will remain with the Reserve squadrons and MAGs. Replacement AAE will be requisitioned using local procedures. AAE pool sub-custodians will consolidate AAE reports and add all data utilizing the AWIS website AAE module at https://awis.navair.navy.mil. TYCOM review the feeder reports in the AWIS database for accuracy, and submit final reports to COMNAVAIRSYSCOM. COMNAVAIRSYSCOM totals and tabulates feeder reports by aircraft custodian; compares balances to planning factor requirements, and present/future aircraft populations. The cognizant COMNAVAIRSYSCOM Program Manager or Program Executive Officer will be advised of predicted shortages so that timely budgeting and procurement actions may take place.

7.5.8.2 Pool custodians will report all AAE inventories, transactions and condition status via the AWIS website AAE module at https://awis.navair.navy.mil. In the event that the AWIS website is not available, the pool custodian will make liaison with the TYCOM for reporting procedures and requirements. In the event that the TYCOM deems it necessary to submit reports via Naval message, a sample of the NAVAIR Consolidated Inventory Report is contained in Figure 7-5-1.

7.5.9 AAE Planning Factors.

7.5.9.1 General. The following pages list quantities of end item bomb racks and missile launchers authorized per airframe. Aircraft Controlling Custodians (ACCs) may use this data to compute total requirements based on the number and types of aircraft supported and their mission roles.

7.5.9.2 COMNAVAIRSYSCOM shall use these quantities to compute worldwide inventory objectives.

7.5.9.3 Quantities of 4Z cognizance material listed herein may be used to derive requirements for other interrelated non-4Z cognizance material needed to install the bomb rack or launcher such as pylons, fairings, adapters, electrical interface harnesses, etc. Figures 7-5-2 through 7-5-12 provides a listing of Aircraft Applications for the various AAE items.

7.5.10 AAE Asset Status Matrix.

7.5.10.1 The AAE asset status matrix presents the actual and projected future inventory status through a seven year period, as a tool to determine readiness posture and identify shortfalls in sufficient lead time to allow the repair and/or procurement process to take place.

7.5.10.2 A matrix will be prepared for each AAE 4Z COG end item. The matrix is a 10 column spreadsheet, columns headed and defined as follows (see Figure 7-5-13 for sample AAE asset status matrix):

a. COLUMN 1. FY Ending Date: The last day of each fiscal year.

b. COLUMN 2. Scheduled Deliveries: The scheduled procurement quantity to be delivered during each fiscal year.

ITEM		NOMENCLATURE	PART NO.	NSN	CNAP	CNAL	CNAVRES	CNATRA	AAE TPO	NAVAIR	TOTAL
1	A	TER-7 A/A37B-5E	292AS500-201	4ZH1095-01-055-8923FZ	0	17	0	0	68	9	94
	B		292AS100-201	4ZH1095-01-055-8923FZ	0	0	0	0	0	0	0
TOTALS:					0	17	0	0	68	9	94
PREVIOUS QUARTER: 200											
MAINTENANCE PIPELINE: .057											

ITEM		NOMENCLATURE	PART NO.	NSN	CNAP	CNAL	CNAVRES	CNATRA	AAE TPO	NAVAIR	TOTAL
2	A	MER-7 A/A37B-6E	291AS500-201	4ZE1095-01-053-7225FZ	1	63	18	0	187	10	279
	B	MER-7	291AS100-201	4ZE1095-01-053-7225FZ	0	13	0	0	0	0	13
TOTALS:					1	76	18	0	187	10	292
PREVIOUS QUARTER: 269											
MAINTENANCE PIPELINE: 0.04											

ITEM		NOMENCLATURE	PART NO.	NSN	CNAP	CNAL	CNAVRES	CNATRA	AAE TPO	NAVAIR	TOTAL
3	A	ITER (BRU-42/A)	1348AS500	4ZH1095-01-257-1967FA	721	954	35	0	625	46	2381
TOTALS:					721	954	35	0	625	46	2381
PREVIOUS QUARTER: 2417											
MAINTENANCE PIPELINE: 0.04											

ITEM		NOMENCLATURE	PART NO.	NSN	CNAP	CNAL	CNAVRES	CNATRA	AAE TPO	NAVAIR	TOTAL
4	A	IMER (BRU-41/A)	1348AS100	4ZH1095-01-257-1968FA	563	402	100	0	175	25	1265
TOTALS:					563	402	100	0	175	25	1265
PREVIOUS QUARTER: 1264											
MAINTENANCE PIPELINE: 0.04											

Figure 7-5-1. Sample NAVAIR Consolidated Inventory Report

ITEM		NOMENCLATURE	PART NO.	NSN	CNAP	CNAL	CNAVRES	CNATRA	AAE TPO	NAVAIR	TOTAL
5	A	BRU-33/A	J014000-525	4ZE1095-01-209-0665GF	171	119	68	0	0	11	369
	B	BRU-33/A	J014000-529	4ZE1095-01-314-8688GF	4	63	56	0	0	0	123
	C	BRU-33A/A	J014000-541	(IAAC-911)	408	405	76	0	0	27	916
	D	BRU-33A/A	3036AS100		114	163	0	0	0	0	277
TOTALS:					697	750	200	0	0	38	1685
PREVIOUS QUARTER: 1509											
MAINTENANCE PIPELINE: 0.06											

ITEM		NOMENCLATURE	PART NO.	NSN	CNAP	CNAL	CNAVRES	CNATRA	AAE TPO	NAVAIR	TOTAL
6	A	A-4 MER-7 ADAPTER KIT	5821500-523	4ZD1095-00-909-2799DA	0	12	0	0	15	0	27
	B		5821500-543	4ZD1095-00-408-5658DA	0	0	0	0	0	0	0
TOTALS:					0	12	0	0	15	0	27
PREVIOUS QUARTER: 12											
MAINTENANCE PIPELINE: 0.000											

ITEM		NOMENCLATURE	PART NO.	NSN	CNAP	CNAL	CNAVRES	CNATRA	AAE TPO	NAVAIR	TOTAL
7	A	A-4 TER-7 ADAPTER SET	5821520-523	4ZD1095-00-909-2756DA	0	12	0	0	0	0	12
TOTALS:					0	12	0	0	0	0	12
PREVIOUS QUARTER: 12											
MAINTENANCE PIPELINE: 0.000											

ITEM		NOMENCLATURE	PART NO.	NSN	CNAP	CNAL	CNAVRES	CNATRA	AAE TPO	NAVAIR	TOTAL
8	A	A-6 MER-7 ADAPTER KIT	291AS394-1	4ZM1095-01-024-6515FA	0	125	0	0	109	0	234
TOTALS:					0	125	0	0	109	0	234
PREVIOUS QUARTER: 125											
MAINTENANCE PIPELINE: 0.000											

Figure 7-5-1. Sample NAVAIR Consolidated Inventory Report - contd.

EA-6B AIRCRAFT INVENTORY	QTY	MISSION EQUIPMENT	QTY
AERO 7A	4	LAU-7E/A (Note 1)	0.5
AERO 7B	1	ADU-299B/A	0.5
		LAU-118	2

NOTES:

1. Use LAU-7B/A-1 if no LAU-7E/A are available.

Figure 7-5-2. AAE Planning Factors for EA-6B Aircraft

AV-8B AIRCRAFT INVENTORY	TACTICAL QTY	TRAINER QTY	MISSION EQUIPMENT	TACTICAL QTY	TRAINER QTY
BRU-36	7	2	ADU-830	0.5	0
			BRU-42	3	2
			DITER	1.5	0
			LAU-7F/A (Note 1)	2	2
			LAU-117	2	0
			LAU-127D/A	0.5	0

NOTES:

1. LAU-7C/A and E/A suitable substitute until adequate inventory of LAU-7F/A can support requirement.

Figure 7-5-3. AAE Planning Factors for AV-8B Aircraft

F/A-18A-D AIRCRAFT INVENTORY	QTY	MISSION EQUIPMENT	TACTICAL	TRAINER
BRU-32 Series	5	BRU-33	2	2
LAU-7F/A (Note 1)	2	BRU-41	1	1
LAU-116 series (LH)	1	BRU-42	0.1	0
LAU-116 series (RH)	1	LAU-115C/A	1.5	0
SUU-63	4	LAU-117	0.75	0
SUU-62	1	LAU-118	1	0.02
		LAU-127F/A (Note 2)	1	0
		BRU-55 series	3.5	0.5

NOTES:

1. All F/A-18A-D LAU-7 wingtip stations will develop to LAU-7F/A. Until quantities are supported, utilize LAU-7E/A, LAU-7D/A or LAU-7B/A-1.
2. All under wing LAU-127 carriage will develop to LAU-127E/A. If LAU-127E/A not available, utilize LAU-127D/A.

Specific T/M/S Lot Compatibility is established via the USN F/A-18 Armament Weapon System Interchangeability Matrix (AWSIM). The AWSIM is available at: http://f18awsim.navair.navy.mil.

Figure 7-5-4. AAE Planning Factors for F/A-18A-D Aircraft

F/A-18E-F AIRCRAFT INVENTORY	QTY	MISSION EQUIPMENT	TACTICAL	TRAINER
BRU-32B/A	7	BRU-33	3	2
LAU-127F/A	2	BRU-41	1	1
LAU-116B/A (LH)	1	ADU-773/A	2	2
LAU-116B/A (RH)	1	LAU-115D/A	1.5	0
SUU-78	1	LAU-117	0.5	0
SUU-79	4	LAU-118	1	0.02
SUU-80	2	LAU-127F/A (Note 1)	2	0
		BRU-55 series	3.5	0.5

NOTES:

1. All under wing LAU-127 carriage will develop to LAU-127E/A. If LAU-127E/A not available, utilize LAU-127D/A.

Specific T/M/S Lot Compatibility is established via the USN F/A-18 Armament Weapon System Interchangeability Matrix (AWSIM). The AWSIM is available at: http://f18awsim.navair.navy.mil.

Figure 7-5-5. AAE Planning Factors for F/A-18E-F Aircraft

EA-18G AIRCRAFT INVENTORY	QTY	MISSION EQUIPMENT	TACTICAL	TRAINER
BRU-32B/A	7	LAU-118	3	0
LAU-116B/A (LH)	1	ADU-773/A	2	0
LAU-116B/A (RH)	1	LAU-127E/A (Note 1)	0.5	0
SUU-78	1	ADU-773	0.5	0
SUU-79	4			
SUU-80	2			

NOTES:

1. All under wing LAU-127 carriage will develop to LAU-127E/A. If LAU-127E/A not available, utilize LAU-127D/A.

Figure 7-5-6. AAE Planning Factors for EA-18G Aircraft

T-45 AIRCRAFT INVENTORY	QTY	MISSION EQUIPMENT	T-45
ERU-119	2	BRU-38	1

Figure 7-5-7. AAE Planning Factors for T-45 Aircraft

P-3C AIRCRAFT INVENTORY	QTY	MISSION EQUIPMENT	P-3C
BRU-12	8	BRU-14	3
BRU-15	6	AERO 1A	6
		AERO 1B	6
		LAU-117 (Note 1)	2

NOTES:

1. AGM-65 modified aircraft only.

Figure 7-5-8. AAE Planning Factors for P-3C Aircraft

H-60 AIRCRAFT INVENTORY	SH-60B	MH-60R	HH-60H	MH-60S	MISSION EQUIPMENT	SH-60B	MH-60R	HH-60H	MH-60S
BRU-14	3	4	3	0	M299	1	2	1	2
BRU-65	0	0	0	2					

Figure 7-5-9. AAE Planning Factors for SH-60B, MH-60R, HH-60H and MH-60S Aircraft

AH-1 AIRCRAFT INVENTORY	AH-1W	AH-1Z	MISSION EQUIPMENT	AH-1W	AH-1Z
BRU-22	1	0	M272	1	0
BRU-23	1	0	M279	0.5	0
BRU-59	0	4	M299	0	2
			LAU-7F/A (Note 1)	1	2
			TML	2	0
			ADU-299A/A	1	2
			Talley Rack	2	0

NOTES:

1. Substitute LAU-7C/A or LAU-7E/A until inventory supports utilization of LAU-7F/A.

Figure 7-5-10. AAE Planning Factors for AH-1W, AH-1Z Aircraft

UH-1 MISSION EQUIPMENT	UH-1N QTY	UH-1Y QTY
BRU-22	0	0
BRU-23	0	0
BRU-59	2	2

Figure 7-5-11. AAE Planning Factors for UH-1 Aircraft

F-35 AIRCRAFT INVENTORY	F-35B QTY	F-35C QTY	MISSION EQUIPMENT	F-35B QTY	F-35C QTY
Alternate Advanced Rail Launcher (AARL)	2	2	LAU-147/A	1	1
BRU-68/A	4	6	LAU-148/A	2	2
BRU-67/A	2	0	BRU-41	0	1.5
Alternate A/A Pylon	2	2	BRU-55 series	3	3
Midboard Pylon (CV)	0	2	External Missile Adapter (EMA)	1	0
Inboard Pylon (CV)	0	2	Stretched External Missile Adapter (SEMA)	0	1
Midboard Pylon (STOVL)	2	0	LAU-117	1	1
Inboard Pylon (STOVL)	2	0	LAU-118	1	1
High in Bay Adapter (CV)	0	2	Low in Bay Adapter (CV)	0	2
GBU-32/38 Adapter	2	0	GBU/AIM-120 Adapter	2	0
			BRU-61	2	2
			BRU-61 Adapter	1.5	1.5

Figure 7-5-12. AAE Planning Factors for F-35 Aircraft

SAMPLE AAE NET ASSET STATUS MATRIX LAU-7C/A MISSILE LAUNCHER									
1. FY Ending Date	2. Scheduled Deliveries	3. Attri-tion	4. Project-ed Inven-tory	5. Rqmts for PAI	6. Rqmts for BAI	7. Rqmt for Reconstitu-tion Reserve Aircraft	8. Rqmt for Maintenance Pipeline Spares	9. Total Invento-ry Objec-tive	10. Net Asset Status
30-SEP-09	0	0	549	367	68	4	44	483	66
30-SEP-10	0	49	500	364	57	18	40	479	21
30-SEP-11	0	47	467	372	71	16	37	496	-29
30-SEP-12	0	45	422	362	47	1	34	444	22
30-SEP-13	0	43	379	324	23	4	30	381	- 2
30-SEP-14	0	41	338	286	17	5	27	335	3
30-SEP-15	0	40	298	264	17	10	24	315	-17

Figure 7-5-13. Format for AAE Net Asset Status Matrix LAU-7C/A Missile Launcher (Sample Only)

c. COLUMN 3. Attrition: Planned losses caused by jettison or other irreparable damage.

d. COLUMN 4. Projected Inventory: Line 1 is the actual on hand inventory. Subsequent lines, add gains from Column 2, minus losses Column 3.

e. COLUMN 5 and 6. Requirements for Primary Aircraft Inventory (PAI) and Requirements for Backup Aircraft Inventory (BAI): The quantity of an item listed in planning factors multiplied by the number of user aircraft as contained in the Aircraft Program Data File (APDF) and Exhibit A-II.

f. COLUMN 7. Requirement for Reconstitution Reserve Aircraft: The quantity of an item listed in planning factors multiplied by the number of aircraft held in Reconstitution Reserve category.

g. COLUMN 8. Requirement for Maintenance Pipeline Spares: The percentage of the Column 4 inventory expected to be out of service requiring Depot repair at any given time.

h. COLUMN 9. Total Inventory Objective: The sum of the preceding four requirements columns.

i. COLUMN 10. Net Asset Status: The difference between the projected inventory quantity and the total inventory objective. Negative numbers indicate the Depot repair and/or procurement quantity required to meet the inventory objective, positive numbers indicate excesses.

7.5.11 Attrition and Maintenance Pipeline Percentages. See Figure 7-5-14 of this volume.

7.5.12 AAE Fleet Maintenance Pipeline. See Figure 7-5-15 of this volume.

MISSILE LAUNCHERS	ATTRITION	MAINTENANCE PIPELINE
LAU-7 series	.10	.15
LAU-115 series	.15	.10
LAU-116 series	.01	.04
LAU-117	.05	.05
LAU-118	.03	.04
LAU-127 series	.08	.10
M272	.02	.04
M279	.02	.04
M299	.02	.04
TOW Missile Launcher	.01	.01
ADU-299 Adapter	.01	N/A
BOMB RACKS	**ATTRITION**	**MAINTENANCE PIPELINE**
ADU-830/A	.01	0
AERO 7A	.05	.10
AERO 7B	.04	.10
BRU-11	.01	.165
BRU-12	.005	.051
BRU-14	.004	.06
BRU-15	.008	.052
BRU-22/23	.02	.073
BRU-32 series	.015	.10
BRU-33 series	.025	.06
BRU-36 series	.01	.04
BRU-38	.06	.04
BRU-41A (IMER)	.05	.10
BRU-42A (ITER)	.02	.10
BRU-55 series	.025	.06
BRU-59/A	.02	.073
BRU-61/A	TBD	TBD
BRU-65/A	.004	.06
BRU-70 (DITER)	.02	.10
TOW Ejector Rack	.02	.04
AERO 1A Adapter	.01	.01
AERO 1B Adapter	.01	.01

Figure 7-5-14. Attrition and Maintenance Pipeline Percentages

A. Nomenclature	B. Pt. No	C. Sched. Maint. Interval	D. Pipeline Frequency (months)	E. Fleet Inventory	F. Monthly Sched. Maint. Pipeline (Inv/Freq)	G. Sched. Maint. Pipeline Percentage	H. Monthly Unsched. Maint. Pipeline 8.3%	I. Total Monthly Maint. Pipeline Column F + H	J. Total Pipeline Annual Require-ment	K. Notes
BRU-11	All	308 Day	10	183	18	10.10%	15	33	18.40%	
BRU-12	All	224 Day	7.5	1629	217	13.10%	135	352	21.60%	
BRU-14	All	365 Day	12	1730	144	12.01%	144	288	20.31%	
BRU-15	All	365 Day	12	1258	104	12.09%	104	208	20.39%	
BRU-20 series	All	120 Day	4	576	136	23.60%	46	182	31.50%	
BRU-32	All (including B/A)	210 Day	7	6105	872	14.30%	508	1380	22.40%	
BRU-33	All	210 Day	7	2046	292	14.30%	170	462	22.40%	
BRU-36	All	365 Day	12	1184	99	8.30%	99	198	16.70%	
BRU-41 IMER	1348AS100	360 Day	12	862	72	8.30%	72	198	16.70%	
BRU-42 ITER	1348AS500	360 Day	12	1507	125	8.30%	125	250	16.70%	
BRU-55 series	All	210 Day	7	430	61	14.30%	35	96	22.40%	
BRU-59/A	291AS600	180 Day	6	329	55	16.70%	27	82	24.90%	
BRU-65	3860AS100-1	360 Day	12	0	0	TBD	0			
AERO 7A	All	224 Day	7.5	1060	141	13.30%	88	229	21.60%	
AERO 7B	All	224 Day	7.5	159	21	13.30%	13	34	21.60%	
Talley Rack	All	360 Day	12	431	36	8.30%	36	72	16.70%	

Figure 7-5-15. Sample Format for AAE Fleet Maintenance Pipeline

A. Nomenclature	B. Pt. No	C. Sched. Maint. Interval	D. Pipeline Frequency (months)	E. Fleet Inventory	F. Monthly Sched. Maint. Pipeline (Inv/Freq)	G. Sched. Maint. Pipeline Percent-age	H. Monthly Unsched. Maint. Pipeline 8.3%	I. Total Monthly Maint. Pipeline Column F + H	J. Total Pipeline Annual Require-ment	K. Notes
LAU-7	All	365 Day	12	2934	245	8.30%	245	490	16.70%	
LAU-7	All	120 Day E/C	4	2934	734	23.60%	245	979	31.50%	1
LAU-115	All	224 Day	7	950	93	14.30%	54	147	22.40%	
LAU-116	All	365 Day	7	1766	252	14.30%	147	399	22.40%	
LAU-117/A(V)2/A	All	365 Day	6	1334	222	16.70%	111	333	24.90%	
LAU-118(V)1A	All	120 Day	6	1235	205	16.70%	102	307	24.90%	
LAU-127	All (including B/A)	210 Day	12	1586	132	8.30%	132	264	16.70%	
TOW Launcher	All	210 Day	0	624	0	0				2
M272 Launcher	All	365 Day	7	363	52	14.30%	30	82	22.40%	
M299	1348AS100	360 Day	102	0	0					2
ADU-299	1348AS500	360 Day	12	848	71	8.30%	71	142	16.70%	
AERO 1	All	210 Day	7.5	2675	357	13.30%	222	579	21.60%	

NOTES:

1. LAU-7s require 120-Day scheduled Eddy Current Test. As long as E/C requirement is in place, use pipeline of 23.6%.
2. No I-Level scheduled inspection.

* Monthly Unscheduled Maintenance is averaged across each AAE end item.

Validated by detailed LAU-127 NAMDRP data analysis and BRU-32 and LAU-7 historical NAMDRP analysis.

Figure 7-5-15. Sample Format for AAE Fleet Maintenance Pipeline - contd.

SECTION 8

Armament Weapons Support Equipment

Table of Contents

Chapter	Subject	Page
8.1	Introduction	8-1-1
8.2	Organizational Level Maintenance	8-2-1
8.3	Intermediate Level Maintenance	8-3-1
8.4	Depot Level Maintenance	8-4-1

CHAPTER 8.1

Introduction

Table of Contents

Paragraph	Subject	Page
8.1.1	General	8-1-1
8.1.2	Applicability	8-1-2
8.1.3	Support Equipment Categories	8-1-2
8.1.4	Armament Weapons Support Equipment (AWSE) Categories	8-1-4
8.1.5	Commander, Naval Air Systems Command (COMNAVAIRSYSCOM) Responsibilities	8-1-6
8.1.6	Responsibilities of Supporting Activities	8-1-12
8.1.7	Support Equipment Recommendation Data (SERD)	8-1-15
8.1.8	Aircraft Maintenance Material Readiness List (AMMRL) Program	8-1-17
8.1.9	Support Equipment Resources Management Information System (SERMIS)	8-1-18
8.1.10	Individual Material Readiness List (IMRL)	8-1-18
8.1.11	IMRL Transaction Reporting	8-1-19
8.1.12	Support Equipment Controlling Authority (SECA)	8-1-20
8.1.13	Weapons Support Equipment (WSE) Allowancing	8-1-21
8.1.14	WSE Tracking Program	8-1-21
8.1.15	WSE Tracking Transaction Reporting	8-1-22
8.1.16	Allowance Equipage List (AEL)	8-1-22
8.1.17	WSE SECA Responsibilities	8-1-22
8.1.18	Standard Support Equipment Programs Applicable to AWSE	8-1-22
8.1.19	Surveys	8-1-26
8.1.20	Component Repair Program	8-1-27
8.1.21	AWSE Repair Criteria	8-1-28
8.1.22	Repair Capability Improvement	8-1-30

List of Illustrations

Figure	Title	Page
8-1-1	Support Equipment Breakdown	8-1-3
8-1-2	Armament Weapons Support Equipment Breakdown	8-1-5
8-1-3	End Item Support for Armament Weapons Support Equipment	8-1-8
8-1-4	Sample Weapons Support Equipment Tracking Transaction Report	8-1-23

CHAPTER 8.1

Introduction

8.1.1 General. This section addresses maintenance program management of Armament Weapons Support Equipment (AWSE) which is under the cognizance of the Commander, Naval Air Systems Command (COMNAVAIRSYSCOM).

8.1.1.1 Support equipment encompasses all equipment required on the ground to make an aeronautical system, support system, or end item of support equipment operational in its intended environment. This includes all equipment required to guide, control, direct, inspect, test (including test equipment hardware and software), adjust, calibrate, gauge, measure, assemble, disassemble, handle, transport, safeguard, store, actuate, service, repair, overhaul, maintain, or operate the system, subsystem, end item, or component. Support equipment is categorized as common (general purpose) or peculiar (special purpose). AWSE refers to that support equipment (common and peculiar) required to make an aircraft, airborne weapon, aircraft armament, or end item of support equipment (support equipment for support equipment) operational in its intended operational environment. AWSE may be either avionic or non-avionic in design and is further categorized as Armament Support Equipment (ASE), Weapons Support Equipment (WSE), or Logistics Support Equipment (LSE) described below.

8.1.1.2 Maintenance program management is a critical management function to be performed during a weapon system's deployment life cycle phase due to the impact of maintenance requirements on the effective use of personnel, materials, facilities, and fiscal resources. Maintenance program management functions include maintenance planning, coordinating, budgeting, and evaluating program progress.

8.1.1.3 The maintenance (including calibration), inventory control, and reporting of AWSE is integral to maintaining aircraft, airborne weapons, and airborne weapon systems. It is essential that procedures and assigned responsibilities published here be clearly understood and complied with to ensure that maximum AWSE readiness and use are achieved. The objective is to achieve and maintain maximum material readiness, safety, and conservation of AWSE through command attention, policy direction, and appropriate administration by all activities responsible for AWSE. Included are:

a. Maintenance (including calibration) and repair of AWSE at that level of maintenance which will ensure the best use of resources.

b. Protection of AWSE from the elements using active cleaning, corrosion control, preservation categories A, B, and C, and storage programs.

c. Use of a perpetual asset inventory control system.

d. Collection, analysis, and use of pertinent data in order to effectively improve AWSE material readiness, safety, and use while simultaneously increasing the efficient and economical management of personnel, monetary, and material resources.

8.1.2 Applicability. Programs have been established to standardize maintenance of support equipment. This section discusses the major programs that are interactive with, and applicable to, AWSE. Further, this section discusses maintenance actions peculiar to the maintenance of air launched missile WSE and LSE (containers) used to support the All-Up-Round (AUR) air launched missile concept described in Section 1 of this volume. Except where noted, AWSE maintenance functions and reporting requirements are applicable to all levels of maintenance.

8.1.3 Support Equipment Categories. Support equipment types are differentiated according to their ability to support a wide variety of systems or specific systems only (common or peculiar), and whether designed to support avionic or non-avionic equipment functions. Figure 8-1-1 depicts these categorical relationships.

8.1.3.1 Common Support Equipment. Common support equipment is defined as those general purpose items supplying or measuring broad parameters of physical properties known to be established in the using service's inventory. These include ground electrical, pneumatic, and hydraulic power units; towing, hoisting, and fueling devices; signal generation devices; and voltage, amperage, and phase measuring devices. The potential for using support equipment items on other end articles, systems, or components does not, in itself, warrant classification of the AWSE item as common support equipment.

8.1.3.2 Peculiar Support Equipment. Peculiar support equipment is defined as those special purpose items designed and produced to support a particular weapon system and which do not meet the criteria of common support equipment.

8.1.3.3 Avionic Support Equipment. Avionic support equipment is defined as common or peculiar support equipment of an electronic nature used for, but not limited to, the testing, troubleshooting, alignment, or calibration of airborne weapon systems and components. Examples are general purpose electronic test equipment, missile component test sets, AUR automatic test equipment, and missile-on-aircraft test sets.

8.1.3.4 Non-avionic Support Equipment. Non-avionic support equipment is defined as common or peculiar support equipment that is non-electronic in nature and may be powered or non-powered. Examples of powered non-avionic support equipment are mobile electric power plants, gas turbine powered service units, aircraft tow tractors, and bomb hoists. Weapons skids, lifting slings, and missile assembly stands are examples of non-powered non-avionic support equipment.

8.1.3.5 Exceptions. For purposes of this manual, the following equipment is excluded from the definition of support equipment.

a. General use consumables list items, such as powered and non-powered hand tools.

b. Office furniture and equipment and items common to all activities defined in applicable allowance lists that are required for indirect support.

c. Common production tools and tooling such as lathes, drills, presses, plating equipment, grinders, induction heaters, etc.

d. Items used only by the contractor.

e. Personal equipment such as headsets, microphones, gloves, protective face masks, etc.

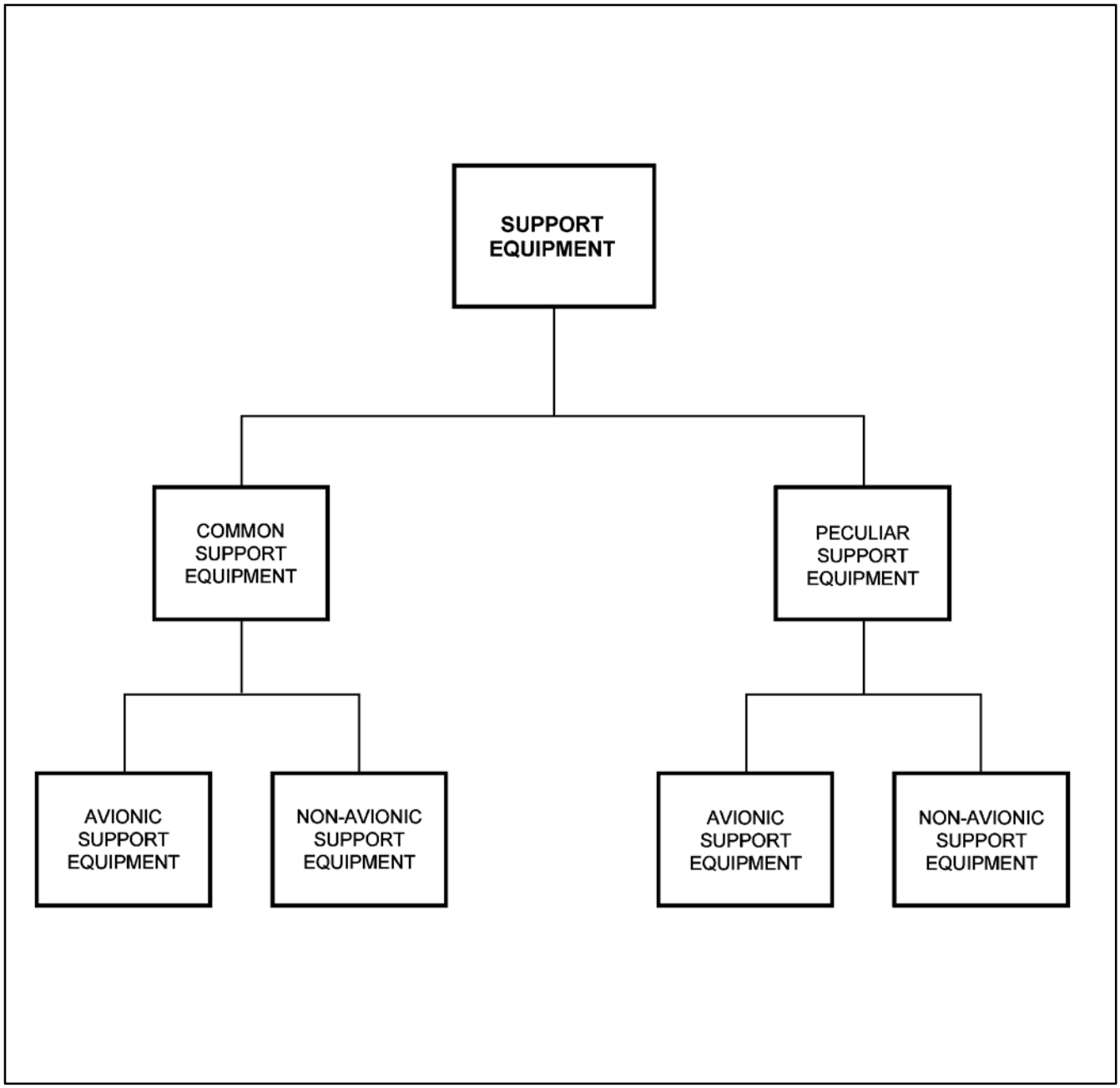

Figure 8-1-1. Support Equipment Breakdown

8.1.4 Armament Weapons Support Equipment (AWSE) Categories. In addition to the previously described categories (i.e., common/peculiar, avionic/non-avionic), AWSE is further identified according to functional area of support provided. ASE, WSE, and LSE are described below and their relationships depicted in Figure 8-1-2.

8.1.4.1 Armament Support Equipment. ASE includes all equipment whose primary function is support of the aircraft-installed armament system and is used primarily by Organizational (squadron) or Intermediate level maintenance activities. ASE is custodied to squadrons and Intermediate level maintenance units by types and quantities authorized by the respective activity's Individual Material Readiness List (IMRL) as described later in this chapter. Examples of ASE are bomb hoisting units, loaders, and adapters used to upload/download weapons. ASE is further described as armament handling equipment and armament systems test equipment.

8.1.4.1.1 Armament Handling Equipment (AHE). AHE are specialized devices used to provide direct support to the aircraft or launch platform. This includes special tools used to move, handle, install, configure, arm, load, and download armament systems or weapons related components. Examples include bomb hoists, linkless ammunition loading system, weapon loaders, and bore sights used to remove, replace, repair, test, assemble, or service aircraft bomb racks, missile launchers, installed machine guns.

8.1.4.1.2 Armament Systems Test Equipment (ASTE). ASTE are devices of electronic design used to test, maintain, or service aircraft armament systems. This includes suspension, arming, releasing, launching, and indicating systems installed either internally or externally on the aircraft or launch platform.

8.1.4.2 Weapons Support Equipment. WSE includes all equipment whose primary function is support of the explosive ordnance component or weapon. Used by Organizational, Intermediate, and Depot level maintenance activities. WSE is divided into two categories: Weapons handling equipment and weapons test equipment.

8.1.4.2.1 Weapons Handling Equipment (WHE). This is a specialized classification of WSE which provides direct support to the weapon commodity. WHE may be either common or peculiar handling equipment used for canning and decanning, magazine handling, and assembly/disassembly of weapons or ordnance related commodities. Examples include hoisting beams, weapon carriers, strongbacks, hand-lift trucks, weapon skids, trailers, bomb trucks (non-self-powered), weapons assembly tables, maintenance stands, and other weapon-related equipment. WHE supports both air and surface launched weapons.

8.1.4.2.2 Weapons Test Equipment (WTE). This is comprised of specialized devices of an electrical design used to test, maintain, or service weapons or explosive ordnance.

8.1.4.3 Logistics Support Equipment. LSE includes all equipment with facility-related functions and is in the custody of many departments. Listed in various allowancing documents under the general heading of Packaging, Handling, Storage or Stowage, and Transportation (PHS&T), LSE consists of that equipment used for the PHS&T of weapons and weapon components within the respective weapon's logistics cycle ranging from manufacturer's sites to the using activities. LSE includes weapons packaging equipment, ship loading or underway replenishment equipment, installed shipboard or shore based equipment, and industrial materials handling equipment, each of which is defined below.

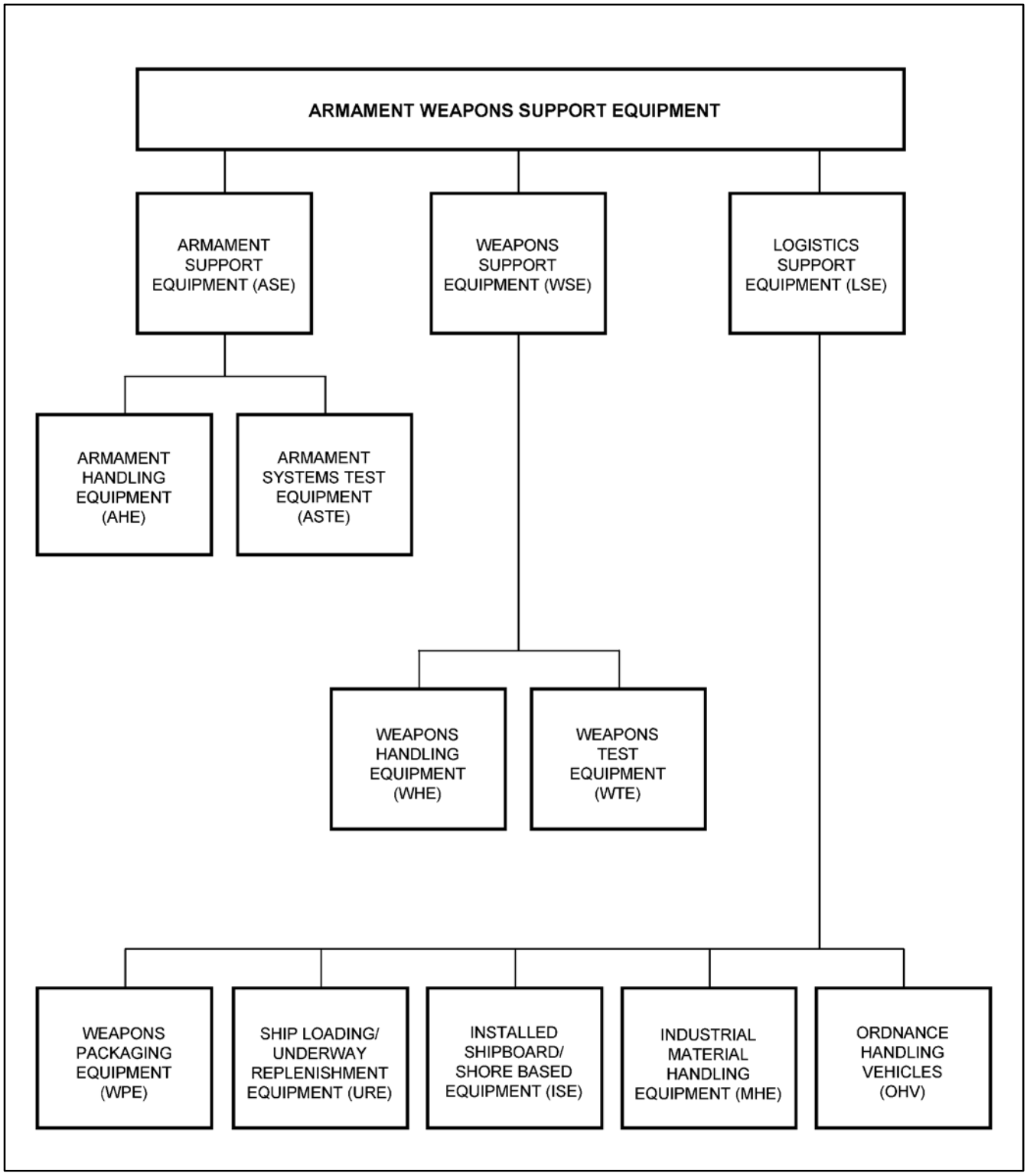

Figure 8-1-2. Armament Weapons Support Equipment Breakdown

8.1.4.3.1 Weapons Packaging Equipment (WPE). This equipment encompasses those specialized packaging and restraining devices which provide physical and environmental protection to weapons and ordnance during transit and storage. Examples of WPE include missile containers, pallets, boxes, and ancillary equipment.

8.1.4.3.1.1 Airborne Weapons Containers. The airborne weapons container is normally a reusable, top-opening, gasket-sealed container used for shipping and storing air launched missiles and their components.

8.1.4.3.1.2 Policy for Handling Empty Airborne Weapons Containers. All empty containers previously used for the shipment of airborne weapons, or ordnance shall be subjected to a 100 percent inspection prior to shipment to other activities for storage, reuse, or salvage. This inspection shall ensure that there is no live ordnance or ammunition in the containers, that the containers are free of foreign matter such as water and debris (other than prescribed interior dunnage), and that the covers are installed and tightly secured. Markings that indicate the presence of weapons, or ordnance, such as loading dates, lot numbers, and Department of Transportation markings, must be completely obliterated. Empty containers shall be identified by applying "EMPTY" labels, or by stenciling on both ends and one side of the container the word "EMPTY" in accordance with OP-4 and/or OP-5. Paints used are prescribed in NAVAIR 01-1A-75. Empty containers shall be reported and dispositioned via transaction item reporting and Ammunition Transaction Reporting (ATR), as appropriate, in accordance with NAVSUP P-724.

8.1.4.3.2 Ship Loading and Underway Replenishment Equipment (URE). This equipment includes specialized handling and transfer devices which provide support to the packaged weapon during ships' loading and underway replenishment operations. Examples of ship loading and URE include connected replenishment slings, vertical replenishment pole pendants, spreader bars, beams, missile transfer dollies, etc. All equipment is primarily used for ships' loading and unloading and ship-to-ship transfer operations involving general supplies and explosive ordnance commodities.

8.1.4.3.3 Installed Shipboard or Shore Based Equipment (ISE). ISE includes both specialized and general equipment provided as a part of the basic facility which functions in support of weapons handling and transfer operations. Examples of such equipment include mechanical dunnaging, C-grabs, bi-rail or monorail hoists, tie-downs, davits, bomb elevators, conveyors, and other fixed or moveable handling equipment.

8.1.4.3.4 Industrial Material Handling Equipment (MHE). Industrial MHE is comprised of commercially available industrial equipment which is approved for use in ordnance handling operations. Examples include such items as forklifts, warehouse tractors, pallet trucks, platform trucks, etc.

8.1.4.3.5 Ordnance Handling Vehicles (OHV). OHVs include those vehicles which have been approved for over-the-road transport and handling of ammunition and ordnance. Examples of such equipment include trucks, trailers, bomb service trucks, etc.

8.1.5 Commander, Naval Air Systems Command (COMNAVAIRSYSCOM) Responsibilities.

8.1.5.1 The Support Equipment Program Manager (PMA-260) is responsible for the program management and funding of AWSE maintenance programs. Commander, Naval Air Warfare Center (COMNAVAIRWARCEN) is responsible for management, integrated logistics support, and maintenance engineering functions pertinent to the AWSE under PMA-260 cognizance.

8.1.5.2 Responsibilities are determined by the end item requiring support. Naval Air Warfare Center Aircraft Division (NAVAIRWARCENAD), Lakehurst, NJ is responsible for providing maintenance support for AWSE in which the aircraft is the end item being supported, while Naval Air Warfare Center Weapons Division (NAVAIRWARCENWPNDIV) is responsible for maintenance support of AWSE for which the end item is the weapon. AWSE items required by organizational and intermediate level maintenance activities are generally under the cognizance of NAVAIRENGSTA Lakehurst, while AWSE required to support the weapon at Depot level maintenance activities are under the cognizance of NAVAIRWARCENWPNDIV. Both organizations have established methodologies and systems to accomplish the allocation, distribution, tracking, and accountability of AWSE under their respective cognizance. These distinctions are depicted in Figure 8-1-3 and discussed in further detail below.

8.1.5.3 Policies, procedures, and responsibilities contained here apply to all Navy and Marine Corps activities concerned with the operation, maintenance (including calibration), overhaul, control, and support of Support Equipment (SE). Common Support Equipment (CSE) is managed by the Aviation Support Equipment Program Manager (PMA-260). Peculiar Support Equipment (PSE) is managed by the appropriate logistics management department aircraft/weapon system program manager as part of the aircraft/weapon system program. Tasks listed in Paragraph 8.1.5.4, steps a through s, also apply to the management of PSE by the appropriate Aircraft/Weapon System Program Manager. The following paragraphs provide an overview of the SE management system by identifying major activities and their responsibilities.

8.1.5.4 COMNAVAIRSYSCOM (PMA-260), as the Aviation SE Program Manager, shall:

a. Design, develop, test, evaluate, acquire, and cause delivery of aircraft weapons systems and aeronautical CSE.

b. Establish new/revised CSE requirements in the Support Equipment Resources Management Information System (SERMIS).

c. Plan, program, budget, manage, and execute CSE projects to ensure Fleet requirements are met.

d. Use established functional organizations, field activities, laboratories, other appropriate commands and agencies, as well as commercial contractors, in carrying out required plans and programs.

e. Establish the requirements and procedures to ensure all tasks, efforts, and progress toward accomplishment of CSE program objectives are being conducted by the functional groups, field activities, laboratories, other commands and agencies, and commercial contractors.

f. Use COMNAVAIRWARCENs and Fleet Readiness Centers (FRCs) to execute CSE programs and projects.

g. Establish plans and procedures for the development and acquisition of Integrated Logistics Support (ILS) for CSE.

h. Prepare and execute CSE Integrated Logistics Support Plans (ILSPs) and User's Logistics Support Summaries (ULSSs).

i. Prepare end item CSE maintenance plans.

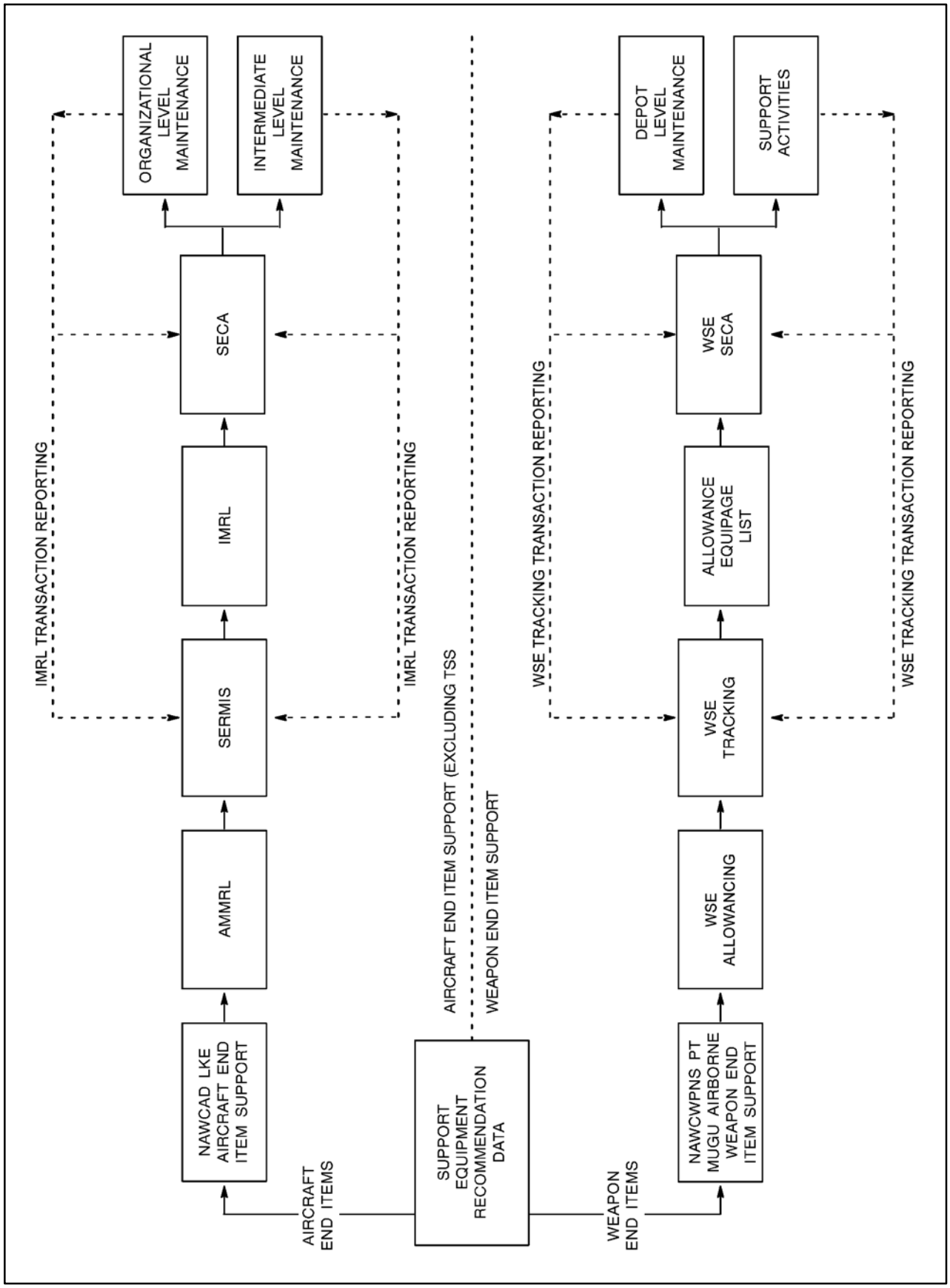

Figure 8-1-3. End Item Support for Armament Weapons Support Equipment

j. Ensure Fleet Support Teams (FSTs) are established for all CSE programs.

k. Provide funding for initial CSE installations.

l. Plan for and provide technical documentation and training requirements to support CSE maintenance concepts, plans, and procedures.

m. Provide primary COMNAVAIRSYSCOM headquarters contact for all CSE logistics in support of the Fleet, Marine Corps, and field activities.

n. Work with each aircraft/weapon system program manager to ensure demands and requirements for CSE are fulfilled in a satisfactory manner.

o. Chair the CSE configuration change control board.

p. Function as the centralized SE inventory management authority responsible for coordinating redistribution of in-use assets among the Support Equipment Controlling Authority (SECA), prioritization of SE procurement, and distribution of new SE, as the Primary Support Equipment Controlling Authority (PSECA).

q. Manage and direct the Aircraft Maintenance and Material Readiness List (AMMRL) program.

r. Establish policies and procedures, and direct the SE retirement program.

s. Act as the focal point on SE policy matters, including Automatic Test Equipment (ATE) and related software.

8.1.5.5 COMNAVAIRSYSCOM, as the Logistics Support department, shall manage and fund the SE calibration, SE D-level rework, and mobile facility programs.

8.1.5.5.1 NAVSUP WSS shall:

a. Develop and implement policies and procedures relating to SE supply support, including Supply Support Management Plans (SSMPs), Allowance Requirements Registers (ARRs) criteria, interim/augmented support, and stock coordination.

b. Perform material management responsibilities for COMNAVAIRSYSCOM cognizance SE line items.

c. Ensure an adequate quantity of assigned SE is available for distribution under Fleet and COMNAVAIRSYSCOM requirements and within available resources.

d. Initiate follow-on procurement for SE.

e. Issue SE, based upon allowances established by COMNAVAIRSYSCOM, and maintain a record of all accountable items for SE released to miscellaneous activities, for example, contractor support programs, loaned, bailment, not assigned to a major operating command, or not under the cognizance of the AMMRL program for reporting purposes.

8.1.5.5.2 Support Equipment Controlling Authority. A term applied to major aviation commands that exercise administrative control of AMMRL program SE end items for allowance and inventory control. The following is a list of designated SECAs:

a. COMNAVAIRSYSCOM.

b. COMNAVAIRFOR.

c. CNTRA.

d. COMNAVAIRESFOR.

e. CNATTU.

NOTE

COMNAVAIRSYSCOM DET Aircraft Controlling Custodian (ACC) executes the SECA functions for all COMNAVAIRSYSCOM field activities, depots, and for Naval Weapons Stations with support equipment supplied by COMNAVAIRSYSCOM under the scope of the AMMRL program.

NOTE

PMA-260 executes SECA functions for the Maritime Prepositioning Force and for initial outfitting of new construction ships.

8.1.5.6 The Naval Air Engineering Station, Lakehurst NJ is responsible for:

a. Integrating higher level logistics policy and direction for AWSE into command life cycle logistics doctrine.

b. Providing ILS management direction and procedures.

c. Accomplishing ILS management on all common support equipment, including automatic test equipment, avionics support equipment, and handling, servicing, testing, maintenance, and safety equipment.

d. Accomplishing ILS management on AWSE research and development efforts in the concept and validation phase.

e. Providing maintenance engineering, supply support, and inventory management on all AWSE except WSE.

f. Planning, budgeting, directing, and managing the AWSE rework program, the Metrology Automated System for Uniform Recall and Reporting (MEASURE) Program, the Metrology/Calibration (METCAL) Program, and the Command Mobile Facilities Program in support of designated program offices, other system commands, and other services.

g. Managing the AWSE-peculiar management information system programs and automatic test equipment in-service engineering software program.

h. Monitoring and auditing the effectiveness of AWSE logistics support and support systems in all life cycle phases.

i. Determining the cause(s) of hardware or software problems limiting AWSE readiness.

j. Ensuring that all logistics impacts are identified in Engineering Change Proposals (ECPs) for weapon system created AWSE changes.

k. Directing that action and funding required to implement approved ECPs and tracking that status of all ECPs through availability, change directive issue, and change incorporation.

l. Managing the total AWSE modification installation effort from budget formulation through execution.

m. Generating and maintaining AWSE peculiar data item descriptions.

n. Generating and managing an AWSE financial management accounting system for all budget appropriations.

8.1.5.7 NAVAIRWARCENWPNDIV is responsible for integrating higher level logistics policy and direction into command life cycle logistics doctrine and policy for airborne weapons and related WSE. These responsibilities include the following:

a. Providing policy and direction for unique life cycle logistics support and maintenance processes as applied to airborne weapons.

b. Providing life cycle ILS management direction and procedures.

c. Accomplishing ILS management on all airborne weapons and related WSE under the cognizance of COMNAVAIRSYSCOM, including systems procured for other services, agencies, and foreign governments or systems procured for the Navy by another service.

d. Accomplishing ILS management on all command airborne weapons and related WSE research and development effort during the concept exploration and demonstration and validation phases.

e. Providing integration of logistics support with system design.

f. Providing maintenance engineering and ILS management for all airborne weapon systems and WSE being developed.

g. Planning, programming, budgeting, directing, and managing the airborne weapons and WSE rework program.

h. Projecting worldwide maintenance workload for airborne weapons and WSE and making adjustments thereto based on requirements, capability, or corrective action changes through the Master Index of Repairables (MIR) program.

i. Monitoring the effectiveness of the logistics support system.

j. Determining the cause of airborne weapons and WSE hardware or software problems limiting readiness and resolving those identified as logistic and maintenance problems.

k. Developing and maintaining ILS databases and management information systems to effectively manage the logistics status, problem analysis, and cause determination.

l. Ensuring that all logistics impacts are identified in engineering change proposals.

m. Providing maintenance interservice support for airborne weapons, and WSE and programming, budgeting, directing, and managing depot maintenance interservice support program for airborne weapons and WSE for which COMNAVAIRSYSCOM is either principal participant or agent.

n. Providing configuration management and configuration status accounting for assigned out-of-production airborne weapons and WSE.

o. Providing configuration status accounting for airborne weapons and WSE.

p. Ensuring provision of Contractor Engineering Technical Services and Navy Civilian Technical Specialists for fleet support of airborne weapons and WSE.

q. Planning, programming, and budgeting for initial provisioning and reprovisioning in support of airborne weapons and WSE.

r. Performing inventory management of cognizant COMNAVAIRSYSCOM material.

s. Exercising administrative and inventory control over 8E cognizance air launched missile containers.

t. Implementing, coordinating, and controlling container maintenance data system reporting programs.

u. Proposing, processing, and implementing changes or revisions to maintenance directives applicable to the container maintenance program.

8.1.5.8 Functionally, Logistics Managers (LM) and Assistant Program Managers, Logistics (APML) plan and implement integrated logistic support and project support management activities for major weapon systems. LMs and APMLs are responsible directly to weapon system program managers, air or air program coordinators for logistics aspects of acquisition programs from inception through deployment and eventual phase out from the active inventory. LMs and APMLs are directly responsible to their respective division directors for the effective planning and development of operationally effective and cost-effective support systems for acquisition programs.

8.1.5.9 There are some AWSE programs requiring joint support by both Naval Air Warfare Center Aircraft Division (NAVAIRWARCENAIRDIV) and NAVAIRWARCENWPNDIV. For example, since it is an aircraft end item, aircraft gun system armament systems test equipment is allocated, distributed, and tracked through the AMMRL program.

8.1.6 Responsibilities of Supporting Activities.

8.1.6.1 The Commander Naval Education and Training Command (CNETC):

a. Develops required Organizational and Intermediate level support equipment maintenance training courses for user activities.

b. Through the CNATTU, assists SECA and other activities in implementing training programs as funded by COMNAVAIRSYSCOM.

c. Conducts support equipment maintenance, maintenance data system, and AMMRL training in formal schools.

8.1.6.2 The reporting custodians, including Commander, Naval Surface Force, Atlantic (COMNAVSURFLANT), Commander, Naval Air Force (COMNAVAIRFOR), Commander, Naval Air Reserve Force (COMNAVAIRESFOR), and Commander, Naval Surface Force, Pacific (COMNAVSURFPAC) activities, assume the following responsibilities for support equipment listed in their IMRLs:

a. Ensure that all maintenance and calibration requirements are accomplished.

b. Ensure that utilization goals are achieved, if established.

c. Report maintenance data system and support equipment transactions.

d. Be responsible for material condition of support equipment, including adequate protection from the overall environment.

e. Accomplish, record, and report technical directive compliance using the maintenance data system.

f. Establish and maintain support equipment inventory control reporting.

g. Conduct physical IMRL inventories annually and as directed by the SECA. Ensure excess support equipment is reported to the SECA with a request for disposition instructions. Unless otherwise authorized by the SECA, ensure excess equipment is transferred to the supply system under NAVAIRINST 13650.1F.

h. Review the IMRL frequently, with emphasis on the evaluation of support equipment allowances to ensure that allowances remain consistent with the actual maintenance support requirement. Submit all reports concerning support equipment inventory, support equipment transactions, and proposed changes to support equipment allowances, following NAVAIRINST 13650.1F and SECA instructions.

i. Ensure all requisitions for reportable IMRL support equipment, including that which is in excess of authorized allowance, or which is not listed in the activity's IMRL as an authorized item, are submitted via the SECA. The requisition must contain full justification of the requirement for such support equipment.

j. Issue support equipment licenses.

k. Subcustody support equipment to supported activities for their use.

l. Review applicable activity operating and maintenance procedures for support equipment subcustodied to them.

m. Perform maintenance and submit maintenance data system reports on supported activities IMRL support equipment.

n. Conduct support equipment training to qualify operators under approved syllabuses.

o. Conduct support equipment personnel and facility requirements planning.

8.1.6.3 The Commander, Naval Air Systems Command:

a. Assumes SECA functions for support equipment assigned to COMNAVAIRSYSCOM activities.

b. Manages and carries out AMMRL program functions under NAVAIRINST 13650.1F.

8.1.6.4 Fleet Readiness Centers. The Commanding Officer is responsible for Depot level rework, modification, and calibration of support equipment scheduled into the FRC under NAVAIRINST 13640.1B. The following actions are taken to fulfill this responsibility:

a. Designate a support equipment coordinator.

b. Act as the maintenance engineering cognizant field activity for peculiar support equipment for assigned weapon systems and equipment.

c. Using milestone charts, plan the rework capability to meet scheduled requirements and obtain all publications, drawings, training, and skills required, when designated by the ILSP or Operational Logistics Support Plan (OLSP) as designated rework point for support equipment end items or components.

d. Ensure examination and evaluation is performed on all support equipment upon arrival at the depot; that all required material and all outstanding support equipment is ordered; and that all applicable approved changes are scheduled for incorporation during rework.

e. Ensure all support equipment rework modification and calibration efforts are documented and that the support equipment custody and maintenance history record (OPNAV 4790/51) is received, updated, and accompanies each item of support equipment that is reworked, modified, or repaired. Initiate new records and forms whenever efforts to obtain records or forms from the previous reporting custodian are not successful.

f. Ensure support equipment rework and calibration records are maintained and reports provided as required.

8.1.6.5 Inventory Control Point (ICP) and Program Support ICP. Support equipment ICPs are activities that are assigned material management responsibility for end items of support equipment. All ICPs are responsible for computing support equipment requirements and procuring assigned end items to fill requirements. The program support ICPs are the NAVSUP WSS, Philadelphia and Mechanicsburg PA.

8.1.6.5.1 The ICP shall:

a. Ensure an adequate quantity of assigned support equipment is available for distribution under Fleet and COMNAVAIRSYSCOM requirements and within available resources.

b. Initiate follow-on procurement for assigned support equipment.

c. Issue support equipment, based upon allowances established by COMNAVAIRSYSCOM, and maintain a record of all accountable items of support equipment released to miscellaneous activities. For example, for contractor support programs, loaned, bailment, not assigned to a major operating command, or not under the cognizance of the AMMRL program for reporting purposes.

8.1.6.5.2 The program support ICPs shall:

a. Provision, procure, and distribute repair parts for assigned support equipment.

b. Maintain lists and provisioning codes for repair parts for assigned support equipment.

c. Ensure that supply support requests for repair parts not managed by the program support ICP are accepted by the assigned ICP.

d. Prepare supply support management plans and milestone charts for COMNAVAIRSYSCOM.

e. Prepare allowance requirements registers and equipment reference lists for interim spare part support of support equipment and aviation consolidated allowance lists.

8.1.6.6 Field Activities. FSTs perform specified maintenance engineering functions for support equipment. Under the auspices of COMNAVAIRSYSCOM, FSTs provide technical assistance; perform engineering investigations; review and take action on beneficial suggestions; maintain out-of-production technical manuals and Maintenance Requirement Cards (MRCs); process Quality Deficiency Reports (QDRs), Hazardous Material Reports (HMRs), and recommendations; and develop engineering change proposals for correction of reported AWSE design or operating deficiencies.

8.1.6.6.1 FSTs for Support Equipment. The Naval Warfare Center Aircraft Division Lakehurst is the FST for most common support equipment, less calibration standards. NAVAIRWARCENAIRDIV coordinates test and measurement equipment space, power, and environmental requirements for all ships which operate aircraft. Further, NAVAIRWARCENAIRDIV is responsible for specified AWSE engineering, acquisition, and integrated logistics support tasks.

8.1.6.6.2 Other Supporting Activities. Several field activities provide specialized support for support equipment.

a. The Naval Air Technical Data and Engineering Services Command (NATEC) provides project coordination for the acquisition, distribution, and maintenance of technical data for support equipment.

b. The NAVAIRWARCENAIRDIV, Systems Engineering Test Directorate, Ground Support Systems Branch conducts test and evaluations of support equipment including supportability evaluations of AWSE for use aboard aircraft carriers and other aviation capable ships.

c. NATEC provides field engineering assistance and instruction for the maintenance, repair, and operation of support equipment.

d. The Metrology Engineering Branch located at the Naval Surface Warfare Center Division, Corona, CA is under the management control of the Commander, Naval Sea Systems Command (COMNAVSEASYSCOM) and provides technical guidance to the METCAL Program. Metrology Engineering Branch support for COMNAVAIRSYSCOM AWSE has been coordinated with and authorized by COMNAVSEASYSCOM to provide support equipment calibration procedures, technical guidance, and services as required.

8.1.7 Support Equipment Recommendation Data (SERD). The SERD is a document, which identifies an end item of SE required to accomplish a specified maintenance task. SERDs or SERD data is submitted by a contractor or government entity. It describes the equipment performance needed, proposes a conceptual design for an SE End Item that being recommended; summarizes the technical characteristics and capabilities of any existing SE End Items that may satisfy the support requirement; and provides acquisition and logistic support data for the SE. SERDs and SERD revisions may also originate from the following sources:

a. Source Data Revision Requests (SODARRs).

b. Integrated Logistics Support Management Team (ILSMT) action chits.

c. NAVSUP WSS.

d. Back fitted SERDs.

e. ECPs.

The SERD is the primary data record and acquisition document for SE, in fact approved SE cannot be procured without an approved SERD.

8.1.7.1 What a SERD does:

a. Defines support requirements for end articles.

b. Describes specific SE needed to satisfy these requirements.

c. Defines SE acquisition and logistic support data.

d. Facilitates Navy technical review of recommended SE.

e. Authorizes negotiations to contract for SE hardware and logistic support development.

f. Allows for the input and management of SERMIS, develop acquisition strategy plans for procurement and/or production of SE.

g. Allows for the management of SE configuration.

h. Initiates Program Support Inventory Control Point (PSICP).

i. Maintains a SE end item history.

8.1.7.2 SERD Requirements Statement.

8.1.7.2.1 The Support Equipment Management System (SEMS) automates the Naval Aviation SE requirement process to serve fleet requirements for logistics support. SEMS uses data from the SERD, interfaces with the NAVSUP WSS Master Item File (MIF) and serves as the sole source of requirements data for Naval Aviation SERMIS as required by NAVAIRINST 13650.1F NAVAIR-SYSCOM AMMRL.

8.1.7.2.2 NAVAIRINST 13600.1 defines the responsibility and policy for the selection, design, approval, ordering, delivery, logistics support of SE and acquisition of SE.

8.1.7.3 SERD Processing Responsibility.

8.1.7.3.1 Except for certain out-of-production aircraft, NAVAIR Lakehurst, NJ processes SERDs for all categories of aircraft and system support equipment, from receipt or generation of the SERD to approval in SEMS. NAVAIR Point Mugu, CA also fully processes/approves SERDs pertaining to Weapons, Guns, Targets, Drones, Electronic Warfare and RADAR systems. NAVAIR JACKSONVILLE, Fl and NORTH ISLAND, CA review SERDs forwarded by NAVAIR Lakehurst NJ affecting Depot SE and develop SERDs for systems under their cognizance. Naval Surface Warfare Center (NSWC) Corona, CA reviews SERDs referred to them for calibration impact. SERD Acquisition Review Office (ARO) authority is delegated to activities by NAVAIR, PMA-260.

8.1.7.3.2 SERD data is revised from time to time as the SE environment changes. Revisions are fed to all the organizations and databases that use SERD data. The most prominent destination for SERD data is the SEMS and SERMIS which produces documents and data used by the Fleet to manage their SE resources.

8.1.7.4 Support Equipment Resources Management Information System. SERMIS is the primary automated management information system supporting the AMMRL Program, as well as Navy and Marine Corps SE Logistics Managers. It also provides:

a. Employment allowancing through an interface with Automated Support Equipment Recommendation Data (AUTOSERD).

b. Real time inventory data which is transferred utilizing the Local Asset Management System (LAMS).

c. Provides standard inventory control procedures.

d. Assists in the redistribution of in-use SE assets.

e. Provides rework scheduling and tracking.

f. Primary tool for configuration management and control of air capable ships.

g. Designed to support aviation weapon systems as defined in the OPNAV Instructions COMNAVAIRFORINST 4790.2 series and the Naval Ordnance Management Policy (NOMP) OPNAVINST 8000.16D source data.

NOTE

SERD updates the SEMS/AUTOSERD system and is the only source that updates SERMIS. SERMIS is the only source for the IMRL; therefore, if there is no SERD data or the SERD is incorrect, the IMRL is incorrect impacting Fleet readiness.

8.1.7.5 SERD Processing.

8.1.7.5.1 SERDs are reviewed to validate the maintenance requirement, to determine if the recommended end item must be bought or if a substitute is available, and to ensure the accuracy of all associated data. Logistic Support recommendations are reviewed and modified if necessary to ensure that the end item is properly supported over its life cycle. SERD data is entered into the SEMS computer system for error checks and for electronic transfer to NAVSUP WSS for cataloging activities. If the SERD is approved, it is sent to the SERMIS, which develops Site/Activity specific IMRL that are used to identify and manage SE for support of assigned aircraft/systems. SERMIS is also used to identify excesses and deficiencies of SE and to manage SE rework.

8.1.8 Aircraft Maintenance Material Readiness List (AMMRL) Program. The AMMRL program implements the SERD elements and provides for the development of documentation needed to determine and establish requirements and inventory control of aircraft support equipment. Support equipment allowances are developed through the AMMRL program which enables effective management of support equipment at all levels of maintenance. The program also provides data for management of automatic test equipment related test program sets. The program is involved with over 27,000 end items of aircraft maintenance support equipment (IMRL items) and 10,000 items of test program sets elements (Tailored Outfitting List (TOL) items) that are used throughout the Navy by aviation maintenance activities. The procedures for allowance and inventory control of IMRL items are defined in NAVAIRINST 13650.1F. The program recognizes the many ship and base loading combinations and various requirements for numerous airframe configurations, power plants, and avionics systems. The AMMRL program

is comprised of two elements: the SERMIS and the IMRL, discussed in Paragraphs 8.1.9 and 8.1.10, respectively. Through automated data processing, the AMMRL program records, stores, and recalls pre-established support equipment application data which is used to prepare the IMRL. The objective of the AMMRL program is to document technical and cataloging data and in-use asset information concerning IMRL and TOL items which can be used by management for the following purposes:

a. To determine and establish allowance requirements for support equipment at activities performing airborne weapons maintenance and training.

b. To provide standardized accounting and inventory control procedures.

c. To assist in the redistribution of in-use assets.

d. To provide a base for budgeting requirements.

e. To assist in measuring material readiness.

8.1.9 Support Equipment Resources Management Information System (SERMIS).

8.1.9.1 SERMIS is an automated data processing system which replaced the Application Data Material Readiness files of the AMMRL program. The SERMIS system provides SECAs with online visibility of source, allowance, inventory, and rework data to aid in inventory control. It is the repository of master support equipment and AWSE data for IMRL printing by SECAs and provides allowance and on-hand in-use asset visibility to maintenance support points at the NAVSUP WSS, Philadelphia and Mechanicsburg PA, the FRC, NAVAIRWARCENWPNDIV, and COMNAVAIRSYSCOM.

8.1.9.2 The SERMIS utilizes a central data base located at the Navy Regional Automation Center, New Orleans, LA. From that data base, online capability is provided to the user through the use of SERMIS terminals at the user sites. Connection between the SERMIS data base and user terminals is accomplished by using the defense data network or telephone lines. Using those methods and local Navy regional automation centers as intermediate data links as appropriate, the SERMIS provides an interactive capability to key AMMRL Program management officials.

8.1.9.3 All SERMIS data is available to users through online queries, requested reports, and scheduled reports. However, the capability to add, delete, or revise data in any way is stringently controlled and resides only with those organizations who are authorized and individuals in those organizations who are qualified and designated by that organization. The ability of the SERMIS to edit and validate data is essential to the AMMRL program. Details on maintenance and use of SERMIS and system products are contained in the SERMIS user's manual, SERMIS requirements document, SERMIS functional description, NAVAIRINST 13650.1F, and SECA implementing instructions.

8.1.10 Individual Material Readiness List (IMRL).

8.1.10.1 An IMRL is a consolidated allowance list specifying authorized quantities of support equipment and AWSE end items required by a particular maintenance activity to perform its assigned end mission. An IMRL is constructed for all Navy and Marine Corps aviation maintenance activities by extracting applicable portions of SERMIS data. The on-hand quantity listed

in the IMRL is based on reports of IMRL item transactions and physical inventories. Data are compiled and maintained to determine material supportability for each IMRL activity. The data is also consolidated to produce functional Navy-wide listings. IMRLs identify material requirements and provide a basis for support equipment procurement and management. That information aids decisions regarding overall readiness posture, budget forecasts, equipment procurement, and redistribution of assets.

8.1.10.2 The IMRL program is designed to ensure that required support equipment is available in the work center. That is done by simultaneously updating a master IMRL of all support equipment assigned to the work center. In support of the IMRL program, the work center supervisor shall:

a. Review appropriate Maintenance Instruction Manuals (MIMs) to compare the work center's IMRL with the list of required support equipment to ensure the proper support equipment is available. If the review shows that a required item of support equipment, or suitable alternate, is not available nor listed in the IMRL, but is a valid requirement, the work center supervisor will initiate an IMRL change request to obtain that item of support equipment.

b. Notify the IMRL manager of any deletions, additions, or corrections to the IMRL to ensure the required equipment is on hand.

c. Assist the IMRL manager in the annual wall-to-wall inventory and other inventories as directed.

d. Initiate surveys on any IMRL item, in custody, which is lost or no longer serviceable. Survey procedures are described in Paragraph 8.1.19.

e. Be directly responsible for ensuring that IMRL items assigned to the work center are complete and functional, and that all work center personnel are completely familiar with the application and use of the equipment.

8.1.10.3 NAVAIRINST 13650.1F provides policy and procedures for allowance and inventory control of support equipment. It also establishes an inventory reporting system and inventory reporting requirements for support equipment. The reports provide the SECAs with visibility for support equipment distribution and redistribution decisions and the various inventory managers with usage data on which to base procurement decisions.

8.1.11 IMRL Transaction Reporting.

8.1.11.1 Transaction reporting commonly referred to as IMRL transaction reporting is the method of reporting support equipment gains, transfers, re-identification, and surveys by an IMRL activity. The support equipment transaction report (OPNAV 4790/64) is specifically designed for the AMMRL program in-use inventory management and reporting system and is used by each Navy and Marine Corps aircraft maintenance activity or component for which an IMRL is prepared and issued (component activities include maintenance facilities, squadron detachments, CNATTU, etc.). The support equipment transaction report is a four-part, interleaved carbon set, designed so that all information is reproduced on all copies. The form is divided into two portions. The left-hand portion pertains to support equipment transaction reporting and the closed loop subsystem. The right-hand portion pertains to support equipment subcustody issue and control. Detailed procedures and guidance are further amplified in SECA instructions.

8.1.11.2 Requirements for support equipment transaction reporting are similar for all SECAs, however, their instructions should be consulted for details. Although continuous management control of support equipment is maintained by timely submission of transaction reports, an annual inventory of support equipment must be conducted, records corrected, and a report submitted. The annual physical inventory may be conducted anytime during the calendar year at the discretion of the SECA. The inventory must be a wall-to-wall inventory, conducted by a team composed of personnel who are knowledgeable in identifying all types of support equipment. The results of the physical inventory will be matched against the activity's custody records. All discrepancies are investigated and differences reported by transaction report. Written reports are submitted to the SECA via the chain of command.

8.1.12 Support Equipment Controlling Authority (SECA).

8.1.12.1 SECAs exercise administrative control of AWSE end items for allowance and inventory control. Major SECA responsibilities include:

a. Issue and control the distribution of AWSE within commands. Where possible, the SECA minimize logistic support requirements by using base loading techniques, for example, placing like items of AWSE at a single site.

b. Implement, coordinate, and control maintenance, inventory control, and maintenance data system reporting programs for AWSE within their command.

c. Manage the Intermediate level maintenance calibration program and implements policies within their command.

d. Propose and process recommended changes or revisions to maintenance directives for AWSE.

e. Propose and process recommendations for new AWSE.

f. Schedule and maintain IMRLs for all applicable Navy and Marine Corps aircraft maintenance activities using guidance provided by COMNAVAIRSYSCOM.

g. Propose and process recommendations for changes to AWSE allowances and provides management coordination for proper execution of the AMMRL program under NAVAIRINST 13650.1F.

h. Implement and monitor Fleet AWSE training programs for both operation and maintenance of AWSE.

i. Review and validate all requisitions submitted by subordinate activities for IMRL reportable AWSE prior to submission to the supply system.

j. IMRL Cumulative Allowance Summary. The IMRL cumulative allowance summary is a monthly change notice that is prepared and issued for each IMRL activity by the cognizant SECA. Beginning the first month after an IMRL is prepared and every month thereafter, the cumulative allowance supplement for that IMRL will list all allowance changes to date. On the second and subsequent cumulative allowance supplements for each IMRL, an asterisk will appear in the first column of the line item to differentiate changes which have occurred in the current month from those previously appearing in the cumulative supplement. An update action

code is used on the cumulative allowance supplement to show additions, deletions, or changes that affect an activity. The update action codes for the cumulative allowance supplement are the same as those used on the IMRL change list.

8.1.12.2 The following is a list of designated SECAs:

a. COMNAVAIRSYSCOM.

b. COMNAVAIRFOR.

c. COMNAVSURFPAC.

d. COMNAVSURFLANT.

e. COMNAVRESFOR.

f. CNATTU.

g. Naval Education Training Command (NETC).

8.1.13 Weapons Support Equipment (WSE) Allowancing. The WSE allowancing program implements the SERD and provides for development of documentation needed to determine and establish requirements and inventory control of WSE. Allocations are developed through the WSE allowancing program which enables effective management of WSE at Depot level maintenance and key support activities. WSE allowances are established by the cognizant APML based on the requirements of the respective program's ILSP. Through automated data processing (WSE tracking), the WSE allowancing program records, stores, and recalls pre-established WSE application data which reflects the individual activity's Allowance Equipage List (AEL). The objective of the WSE allowancing program is to document in-use asset information which can be used by management to:

a. Determine and establish allowance requirements for WSE at activities performing airborne weapons maintenance.

b. Provide standardized accounting and inventory control procedures.

c. Assist in the redistribution of in-use assets.

d. Provide a base for budgeting requirements.

e. Assist in measuring material readiness.

8.1.14 WSE Tracking Program.

8.1.14.1 WSE program inventory and transaction data is tracked through the WSE tracking file. The WSE tracking data file contains over 3,000 items of WSE and provides online visibility of the WSE inventory under COMNAVAIRSYSCOM cognizance which has been allocated to Depot level maintenance activities (organic and commercial) and key support sites. WSE inventory custodians submit mandatory WSE transaction reports whenever:

a. A WSE gain or loss occurs.

b. A transfer of WSE assets between activities occurs.

c. WSE status changes of condition coding to show availability of assets and production support.

8.1.14.2 NAVAIRWARCENWPNDIV, Point Mugu is COMNAVAIRSYSCOM's designated agent for maintaining the master inventory accounting data file of WSE tracking. As such, the NAVAIRWARCENWPNDIV, Point Mugu is responsible for integrating all new WSE activity allocations into the WSE tracking file as well as providing WSE tracking updates as a result of WSE transaction reports.

8.1.15 WSE Tracking Transaction Reporting. Activities holding WSE under COMNAVAIRSYSCOM cognizance are required to report WSE inventory transactions to the NAVAIRWARCENWPNDIV, Point Mugu. WSE transactions may be reported by either of the following methods:

a. Activities having access to the AWIS network utilize that system for reporting WSE transactions in accordance with the report format depicted in Figure 8-1-4.

b. Activities not integrated into Management Action Reporting System (MARS) shall report WSE transactions by letter or message in conformance with the content and format of Figure 8-1-4.

8.1.16 Allowance Equipage List (AEL). NAVSUP WSS, Mechanicsburg PA prepares and maintains the AELs for all airborne weapons. In consonance with the APML's ILSP, the AEL serves as an allowance and inventory record of WSE required at an activity to support a particular airborne weapon system. The AEL also identifies material requirements and provides a measure of supportability for WSE maintenance by identifying authorized WSE allowances and inventories which are tailored to the respective supporting maintenance level activity. AELs are updated via the WSE tracking file discussed above.

8.1.17 WSE SECA Responsibilities. The SECA for WSE is COMNAVAIRSYSCOM. APMLs issue, control, distribute, or redistribute WSE under their cognizance throughout the airborne weapon's life cycle as program support requirements dictate to ensure optimum use of WSE in support of the Chief of Naval Operation's established asset readiness objective. SECA responsibilities include:

a. Initial distribution and control of the WSE assets to participating commands.

b. Implementation, coordination, and control of maintenance, inventory control, and maintenance data system reporting programs for WSE.

c. Proposes and processes recommended changes and revisions to maintenance directives for WSE.

d. Proposes and processes recommendations for new WSE.

e. Proposes and processes recommendations for changes to WSE allowances and provides management coordination to assure execution.

f. Implements and monitors WSE training programs for both operation and maintenance of WSE.

8.1.18 Standard Support Equipment Programs Applicable to AWSE. Standardized programs established for the maintenance of Navy support equipment that are interactive with AWSE maintenance include the Planned Maintenance System (PMS) for aeronautical equipment, METCAL program, SE licensing, and the fluid handling program. A brief discussion of each of these programs follows.

NAVAIR: NAWCWPNS, Point Mugu LETTER NO. 555555 DATE 01MAR94

SYSTEM: WSE Inventory Accounting System

SUBJECT: ALM WSE Asset/Inventory Transaction Report

	ACTIVITY	CODE	NAME
ORIGINATOR:	Reporting Activity	Activity Code	SE Manager
DESTINATION:	NAWCWPNS, Point Mugu	(DAPML Code)	SE Manager
	NAVAIR	(APML Code)	(APML Name)
	Transfer/Receipt Activity	Activity Code	SE Manager

AUTHORITY FOR TRANSACTION: (APML)

TRANSACTION NUMBER: (If appropriate)

TYPE OF TRANSACTION: (ck) ( ) Transfer to _____.
( ) Receipt from _____. ( ) Receipt new asset _____.
( ) Change status from condition _____ to condition _____.

EQUIPMENT STATUS CODES REQUIRED TO SUPPORT PRODUCTION

0 - 1	Operational.
0 - 2	Requires Calibration/Certification.
0 - 3	Requires Local Repair.
0 - 4	Requires Parts.
0 - 5	Requires Depot Level Repair.

ASSET: P/N
NSN
SN
Nomenclature

Figure 8-1-4. Sample Weapons Support Equipment Tracking Transaction Report

8.1.18.1 Planned Maintenance System. The PMS promulgated by COMNAVAIRFORINST 4790.2 series is a scheduled maintenance program which formally ensures that aeronautical equipment is maintained throughout its life cycle by controlling degradation resulting from time, operational cycles, use, or climatic exposure. Many separate but interrelated functions are combined to make up the maintenance workload in support of aircraft and aeronautical equipment. The limited time available for performing maintenance does not allow these tasks to be considered, planned, and performed on an individual basis. They must be combined and sequenced properly if the overall job is to be done efficiently. The best possible use of time, manpower, materials, and funds is mandatory if maximum equipment availability and use are to be realized. Properly conducted, the PMS ensures that all aeronautical equipment receives the required necessary servicing, preventive maintenance, and inspections. The purpose of the PMS is to simplify complex maintenance tasks.

8.1.18.1.1 Scheduled maintenance requirements ensure timely discovery and correction of defects. Reporting custodians may increase the depth and frequency of any scheduled inspection or require additional inspections whenever excessive time has elapsed between inspections, or when environmental or operational conditions are considered to have impaired the material reliability or integrity of the equipment. Inspections performed to a greater depth or at an increased frequency are logged, if required, as the type which would normally be performed and do not alter the schedule of the programmed inspections.

8.1.18.1.2 PMS publications consist of checklists, MRCs, Periodic Maintenance Information Cards (PMICs), sequence control charts or cards, and standard Depot level maintenance specifications which are established by direction of COMNAVAIRSYSCOM. These publications provide a basis for planning, scheduling, and executing scheduled maintenance requirements. The requirements are scheduled with intervals such as calendar time, flight and operation hours, or number of cycles and events based on the predominant failure mode. In instances where a conflict exists between planned maintenance system publications and other directives, the PMS publications take precedence.

8.1.18.2 METCAL Program. Calibration is the process by which the performance of units of calibratable support equipment is compared and adjusted (calibrated) to that of equipment (metrology standards) of higher accuracy to ensure that the support equipment or precision measuring equipment is operating within established tolerance limits. Metrology standards are calibrated by standards of higher accuracy in upper echelon calibration laboratories until traceability to national standards maintained by the National Bureau of Standards and the U.S. Naval Observatory is achieved. Items requiring calibration are listed in NAVAIR 17-35NCA-1. Equipment requiring periodic calibration is scheduled into an appropriate calibration facility or laboratory. The recall of equipment for calibration at established intervals is facilitated by the MEASURE, which provides management information and data required to develop recall schedules. MEASURE operational control centers (Norfolk and San Diego) publish and monitor equipment recall schedules and allocate resources to carry out the schedules. The MEASURE user's manual is the policy and procedures document for the METCAL Program. Requests for copies of the MEASURE users manual, as well as questions concerning the METCAL Program, should be addressed to the nearest MEASURE operational control center.

8.1.18.3 Support Equipment Licensing. A support equipment operator's license (OPNAV 4790/102) is required of all personnel who operate support equipment, regardless of rate or rating. COMNAVAIRFORINST 4790.2 series lists support equipment which requires a support

equipment operator's license. The support equipment training and licensing program formalizes the support equipment operator and organizational maintenance training and licensing program and addresses responsibilities and procedures required for program support. The improper use of support equipment has resulted in excessive ground handling accidents, repair, and replacement costs amounting to millions of dollars annually and reduced operational readiness. The major reasons for improper use of support equipment are lack of effective training of the individuals who operate and maintain the equipment and a lack of supervision or leadership by the officers responsible for operation and maintenance of support within the organization.

8.1.18.4 Fluid Handling Programs. Various consumables such as fuel, oil, oxygen, and hydraulic fluid are used in AWSE for servicing and maintaining aeronautical equipment and airborne weapons. Because of the hazardous nature and susceptibility to contamination of these fluids, it is imperative that personnel associated with such operations have a thorough knowledge of them. COMNAVAIRFORINST 4790.2 series establishes formal surveillance programs to achieve and maintain a satisfactory degree of fluid purity in the respective end items and AWSE. Compliance by all Navy and Marine Corps activities operating or maintaining aeronautical equipment is mandatory. Sampling requirements and procedures shall be specified in the respective equipment or weapon systems MRCs, MIMs, or technical manuals. The FST shall conduct continuing engineering reviews and evaluations to determine program effectiveness. Detailed characteristics, handling procedures, sampling, and contamination limits shall be included in each activity's support equipment training syllabus.

8.1.18.4.1 The prime objective of this program is to achieve and maintain a satisfactory level of fluid purity in hydraulic systems, thereby providing for safe and efficient operation of naval aircraft and support equipment. Additionally, the program addresses those requirements which will provide the design requirements, technical documentation, training, maintenance practices, standards, and equipment which will ensure that the Navy standard Class 3 or cleaner contamination level is maintained for support equipment as defined in NAVAIR 01-1A-17.

8.1.18.4.2 Maintaining acceptable contamination levels is assured, in part, by means of a fluid surveillance program wherein hydraulic fluid from all operating equipment is sampled and tested on a periodic basis, whenever excessive contamination is suspected, and subsequent to major hydraulic system maintenance. When equipment fails to meet Navy standard cleanliness levels, decontamination procedures shall be used to restore the affected system to an acceptable level.

8.1.18.5 Source, Maintenance, and Recoverability (SM&R) Codes.

8.1.18.5.1 SM&R codes are used to communicate maintenance and supply instructions to various logistic support levels and using commands for the logistic support of systems, equipment, and end items. These codes are made available to their intended users by means of technical publications such as allowance lists, Illustrated Parts Breakdown (IPBs) manuals, MIMs, and supply documents. SM&R codes are assigned to each supported item based on the logistics support planned for the end item and its components. SM&R codes also designate the level of authorized use and maintenance responsibility for end items, through the use of the third, fourth and fifth positions. The SM&R code, as shown in the SERD, establishes the Maintenance Philosophy for the End Item.

8.1.18.5.2 The primary objective is to establish uniform policies, procedures, management tools, and means of communication that will promote interservice and integrated material support within

and among the military services. Thus, the establishment of uniform SM&R codes is an essential step toward improving overall capabilities for more effective interservice and integrated support.

8.1.18.5.3 For additional specific information concerning policies, procedures, and responsibilities applicable to SM&R codes, see NAVAIRINST 4423.11, and NAVSUPINST 4423.14B.

8.1.18.6 Tool Control Program (TCP).

8.1.18.6.1 This program, issued by COMNAVAIRFORINST 4790.2 series, provides a means to rapidly account for all tools after completing a maintenance task, thus reducing the potential for foreign object damage. A secondary benefit is reduced tool loss, which reduces tool replacement cost. The Weapons Officer or delegate coordinates the Ordnance TCP.

8.1.18.6.2 Tool Containers. The exterior of all tool boxes, kits, and rollaways used for maintenance will clearly identify the organization, work center, and tool container number. The tools contained therein shall be etched with the organization code, work center code, and the container number. Special accountability procedures shall be established locally for those tools not suitable for etching, for example, jewelers' screwdrivers.

NOTE

Do not etch nonsparking, nonmagnetic beryllium hand tools. The etching process of beryllium hand tools generates a fine dust of beryllium, a known health hazard to personnel.

8.1.18.6.3 The position of each tool in the silhouetted container will be against a contrasting background. The silhouetted tool outline will highlight each tool location within the container. Those containers not silhouetted will contain a diagram of the tool locations. Additionally, they shall include a separate listing of tools in calibration or requiring replacement.

8.1.18.7 Visual Information Display System (VIDS). The VIDS is a management tool established by COMNAVAIRFORINST 4790.2 series. VIDS presents a means of displaying the status of AWSE undergoing maintenance within a production work area and facilitates the assessment of resources available for the effective and efficient performance of required work. The Maintenance Action Form (MAF) documents on-equipment maintenance and removal/over processing of repairable items. COMNAVAIRFORINST 4790.2 series discusses VIDS equipment and procedures in greater detail. Those activities using Naval Aviation Logistics Command Management Information System (NALCOMIS) should refer to that system's users manual.

8.1.19 Surveys. A survey is the procedure required when Navy property or Defense Logistics Agency material, including IMRL equipment and AWSE, in Navy custody is lost, damaged, or destroyed. The purpose of the survey is to determine responsibility and fix the actual loss to the government. To make a true determination, the facts surrounding the loss or damage must be thoroughly investigated and reported in a timely manner. It should not be limited to verifying statements of interested parties, but should be broad enough to ensure that the interests of the government as well as the rights of the individual(s) or activities concerned are fully protected. Review is required to prove or disapprove statements and to place responsibility where it belongs. Survey procedures shall be instituted when an accountable item of AWSE meets one or more of the following conditions.

a. Beyond economical repair which resulted from damage, obsolescence, or deterioration.

b. Acknowledged as nonexistent as a result of loss or theft.

8.1.19.1 Survey Procedures. The survey documents (for administrative) review the condition of accountable AWSE, cause of the condition, responsibility therefore, and a recommendation for disposition. AWSE shall be surveyed in accordance with procedures prescribed in NAVSUP P-485.

8.1.19.2 Reports. The survey shall be initiated and accomplished using Report of Survey (DD 200) and Survey Request, Report, and Expenditure (NAVSUP 154). Type equipment code and serial number of the AWSE shall be included on the forms. Upon approval of the NAVSUP 154, the AMMRL Program Support Equipment Transaction Report (OPNAV 4790/64) and an inventory loss VIDS/MAF (OPNAV 4790/60) shall be submitted on all IMRL reportable items showing the loss of the item(s) from the activity's inventory.

8.1.20 Component Repair Program. COMNAVAIRFORINST 4790.2 series establishes the Component Repair Program to improve readiness of all repairable aeronautical material, including AWSE, with the least expenditure of material, manpower, and money. The program's scope is virtually unlimited and ranges in depth from small adjustments to the complete repair of components and end items. Specifically, the program encompasses those functions performed by the Organizational, Intermediate, and Depot level maintenance activities during overhaul, repair, check, test, certification, modification, or manufacture. These functions are applicable to all AWSE except expendable or consumable items. AWSE shall be repaired at that level of maintenance which will ensure optimum economic use of resources, consistent with assigned availability and readiness standards.

8.1.20.1 Organizational Level Maintenance Functions. Organizational level maintenance activities are responsible for on-equipment repair of AWSE. Specifically, these functions include:

a. Routine servicing; daily, preoperational, and post operation inspections; and daily maintenance in accordance with approved MRCs, MIMs, technical manuals, and local instructions.

b. Operational check and test.

c. Minor adjustment, removal and replacement of components (knobs, safety wire, fuses, light bulbs, etc.).

d. Exterior cleaning and preservation, minor corrosion control, and finish touchup, as required.

e. Compliance with AWSE technical directives.

f. Identifying, protecting, and turning in material that requires higher level maintenance.

g. Preservation categories A, B, and C.

8.1.20.2 Intermediate Level Maintenance Functions. In addition to the tasks assigned to the Organizational level, Intermediate level maintenance activities are authorized to perform the following functions:

a. Acceptance, special, and periodic inspections.

b. Test, fault isolate, adjust, repair, remove, and replace components.

c. Preservation categories A, B, and C.

d. Functional test, nondestructive inspection (magnetic, fluorescent, dye-penetrant, ultrasonic, eddy current, optical, and X-ray), calibration, and weight test.

e. Welding; soldering; fabrication of replacement parts; and flush cleaning, purging, and sampling of hydraulic systems.

8.1.20.3 Depot Level Maintenance Functions. In addition to the tasks assigned to the Organizational and Intermediate levels, Depot level maintenance activities provide rework of AWSE end items and components. Rework is comprised of maintenance and modification functions required to maintain, restore, or improve design level performance, reliability, and material condition. Depot level maintenance activities support the lower levels of maintenance by providing technical assistance and carrying out those functions which are beyond the responsibility or capability of the Organizational and Intermediate levels through the use of more extensive facilities, skills, and materials. Specific AWSE maintenance functions include:

a. Complete rebuild through reclamation, refurbishment, overhaul, repair, replacement, adjustment, servicing, replacement of consumables, inspection, calibration, and testing.

b. Modification (alteration, conversion, engineering change, modernization, and product improvement).

c. Preservation categories A, B, and C.

d. Metal work (pressing).

e. Heat treating, baking, welding, and soldering (electric, spot, seam, and roll).

f. Hardness testing, magnetic perturbation, and pressure testing.

8.1.21 AWSE Repair Criteria. In conformance with the Component Repair Program concept, AWSE materials shall be repaired at that level of maintenance which will ensure optimum use of resources while satisfying operational requirements. Repair criteria are established in the following paragraphs.

8.1.21.1 All maintenance activities may repair consumable materials if a replacement item is not available in stock locally, the item is required to offset a Not Mission Capable Supply (NMCS) or Partial Mission Capable Supply (PMCS), or work stoppage, and such repair is practical and within their capability.

8.1.21.2 All maintenance activities may repair manufactured “M’’ series material if it is practical, economical, and within their capability. In certain cases, this type of material is forwarded to the next higher maintenance level for repair on a customer service basis. It must be understood that requests for “M” series material are, in most cases, filled by an FRC, resulting in the expenditure of considerable time and resources. The Intermediate maintenance activity can, in many cases, make timely repairs to “M” series material with a minimum expenditure of time and resources.

8.1.21.3 Repairs of extensively damaged components should not normally be made if repair costs for a given component will exceed the replacement cost. When it appears that the repair cost will exceed the replacement cost, the published standard replacement price, or if these costs are unknown, disposition will be as follows:

a. When components are so severely damaged that, in the judgment of the Intermediate maintenance activity, repair is not feasible, the component should be condemned and surveyed or returned to the designated overhaul point in accordance with the SM&R code.

b. When an Intermediate maintenance activity decides that repair is feasible though expensive, the component should be shipped to the designated overhaul point. The exception is when expeditious repair is required for an immediate requirement. In this case the component may be repaired by the Intermediate maintenance activity regardless of cost.

c. When an FRC determines that repair is feasible though expensive, the cognizant inventory control point should be contacted for disposition instructions. Pending receipt of disposition instructions, a different unserviceable component should be called in for repair in place of the one being delayed. If no other components are available, the component in question should be repaired to satisfy the repair requirement submitted by the inventory control point.

8.1.21.4 When components with scheduled maintenance times are repaired by the Intermediate Maintenance Activity (IMA), the IMA shall not zero time the component unless specifically authorized to do so. The component should have enough time remaining after repair to complete a full phase or calendar inspection interval prior to forced removal. It is realized that the component may be installed on an aircraft of a different calendar cycle than that from which it was removed, however, certain latitude is granted to operating units to extend maximum operating time. In certain cases, overhaul or repair of components with operating assigned time that do not have enough time to complete a phase or calendar interval is authorized, for example, when a ready-for-issue replacement is not available. The IMA will also repair this type of material when required for reinstallation on a transient aircraft, and the logbooks are not available to verify operating times. Data concerning the repair is provided to the flight crew for applicable logbook entries upon return to home station.

8.1.21.5 Assembled A-series components are normally not procured and stocked. IMAs shall ensure these components are repaired. Requirements to repair this type of material shall be forwarded to the IMA or Depot via supply system requisitions.

8.1.21.6 A microcircuit module is defined as “an assembly of microcircuits, or microcircuits and discrete conventional electronic equipment, constructed as an independently packaged replaceable unit.” Responsibility for Intermediate level activities to repair microcircuit modules is established by the combination of COMNAVAIRSYSCOM assigned Intermediate level SM&R codes and SECA or Type Commander (TYCOM) certification of individual IMAs Miniature/Microminiature (2M) repair capability. In some cases, certain Intermediate level activities may perform Depot level repairs on designated components as approved by COMNAVAIRSYSCOM upon recommendation of the SECA or TYCOM.

a. Repairs will be accomplished only by activities which have been certified as 2M repair capable by the cognizant SECA or TYCOM. Certification is written testimony that the activity has qualified 2M repair technicians assigned, and operable 2M repair equipment available.

b. Refer to COMNAVAIRFORINST 4790.2 series (Naval Aviation Maintenance Program (NAMP)), Chapter 11 for certification procedures for 2M module repair technicians.

8.1.22 Repair Capability Improvement. Optimum expenditure of resources and effective maintenance of AWSE may be precluded by a variety of factors. The most prevalent obstacles are generally classified as inadequacies in the quantity and/or quality of:

a. Personnel.

b. Skills.

c. Equipment or tools.

d. Facilities.

e. Technical data.

f. Parts.

8.1.22.1 The predominant cause of the lack of resources to accomplish planned repair capability at the Intermediate level is that the component or equipment was provisioned for prior to the emergence of the Component Repair Process as we know it today. Additional causes for this lack of resources are failure to provision under established maintenance policy, nonavailability of procurement funds after provisioning, failure of maintenance managers to identify, plan for, and request required resources, lack of Intermediate level maintenance representation at provisioning conferences, and failure to identify and assign the resources required for this function. All echelons of maintenance and command must ensure that deficiencies that have an adverse effect on maintenance are identified and that up-line managers are notified of the deficiencies.

8.1.22.2 To assist in determining deficiencies or reasons for lack of maintenance capability, each IMA shall establish Beyond Capability of Maintenance (BCM) review procedures. The objective of this review is to ensure BCM codes are properly assigned and to determine those areas where the range and depth of Intermediate level repair capability can be improved, either through corrective action for deficiencies preventing the accomplishment of repair or by the establishment of additional repair capability. This encompasses monthly reviews of the Individual Component Repair List (ICRL) for induction or repair limiters.

8.1.22.3 After the BCM action review, the activity may determine that the deficiency can be corrected locally or that it may not be economically practical to obtain the additional capability. If an increase in, or establishment of, a repair capability is desired and justifiable, submit a letter requesting increased capability to COMNAVAIRSYSCOM via the SECA or TYCOM. The request shall include the following, to the shop replaceable assembly level:

a. Specific capability being requested. Include extent of improved capability, for example, limited repair, complete repair, or overhaul.

b. Identify the specific items which require the capability requested by part number and manufacturer's code.

c. System or aircraft which uses the item and number of systems supported. Include projected number of units to be processed per month.

d. Justification. The number of items presently in BCM status, most common repair action, parts to be replaced (if known), anticipated improvements in turn-around time, projected increases in system or aircraft readiness, and any additional items which could be repaired using the improved capability.

e. Equipment or facilities required and what is now on-hand or available locally.

f. Personnel impact, such as reallocations or increases.

g. Training required, such as special courses.

h. Publications required.

8.1.22.4 The SECA or TYCOMs role in the process of improving repair capability is to confirm the activity's input and furnish information that would support or negate the request. Upon receipt of a request, the SECA or TYCOM shall:

a. Amplify the benefits in terms of reduced costs for shipping and repair, reduction in turnaround time, increased readiness, etc.

b. Justify requests by the analysis of Maintenance and Material Management (3M) data.

c. Verify equipment, facilities, personnel, training, and calibration requirements.

d. Estimate total cost of providing improved capability and identify any additional funding requirements.

e. Identify any workload reduction in other areas caused by establishing improved capability.

f. Recommend maintenance plan and SM&R code changes to the shop replaceable assembly level.

g. Determine the benefit of expansion of improved repair capability to other similar sites.

h. If approved, ensure an implementation plan of actions and milestones is initiated.

8.1.22.5 Upon receipt of a request for increased capability and the SECA or TYCOMs forwarding endorsement, COMNAVAIRSYSCOM shall:

a. Review the request and endorsement.

b. Determine the need for and frequency of a quality audit, and arrange for it to be done.

c. Approve or disapprove the request and provide justification.

d. If approved, designate the specific activity to receive the increased capability and specific capability authorized.

8.1.22.6 Activities may request deletion of assigned responsibilities from the SECA or TYCOM. Full justification should accompany all requests. The SECA or TYCOM shall review all requests to determine if the conditions which restrict repair can be overcome.

8.1.22.7 The correction of deficiencies is a continuing problem with new equipment currently in service. Various policies are being implemented to ensure that Intermediate maintenance requirements are documented and provisioning is done for new equipment. Some of these policies are listed in the following steps:

a. Providing for IMA representation during provisioning.

b. Documenting all elements of data required for provisioning.

CHAPTER 8.2

Organizational Level Maintenance

Table of Contents

Paragraph	Subject	Page
8.2.1	General	8-2-1
8.2.2	Organizational Level Maintenance Concept	8-2-1
8.2.3	Organizational Level Maintenance Actions	8-2-1
8.2.4	Coordination and Administration	8-2-3

CHAPTER 8.2

Organizational Level Maintenance

8.2.1 General. Organizational level (O-level) maintenance directly supports and maintains the aircraft weapon system which consists of the aircraft; airborne weapons, ordnance, and ammunition; associated aircraft armament equipment; and Armament Weapons Support Equipment (AWSE). This chapter discusses the maintenance functions which are authorized and designated to be performed by organizational (using activity) personnel. Assignment of individual maintenance functions to a maintenance level allows maintenance activities to further plan and conduct the specific tasks they are required to perform. To determine the extent to which a repair action can be undertaken, the maintenance activity shall consult the appropriate Maintenance Instruction Manuals (MIM), operating and service instructions, or technical directives that apply to each supported weapon system, component, or AWSE item. AWSE is allocated to O-level maintenance activities by Naval Air Systems Command (NAVAIRSYSCOM) and provides guidance for performance of assigned tasks as described in Chapter 8.1 of this volume. Volume I, Chapter 2.2 describes O-level maintenance functions and Chapter 2.3 assigns responsibilities that apply to AWSE.

8.2.2 Organizational level Maintenance Concept. O-level maintenance activities perform scheduled (preventive) and unscheduled (corrective) maintenance actions necessary to maintain or restore AWSE to inherent design levels of performance, reliability, and material condition in performance of the unit's operations on a day-to-day basis. When beyond the capability of the custodian, maintenance will be accomplished by the designated department or activity (Intermediate or Depot) most capable of accomplishing the specific maintenance actions, operational conditions permitting.

8.2.3 Organizational level Maintenance Actions. O-level maintenance activities are authorized to perform all those repair, replacement, modification, and overhaul actions which are prescribed in the applicable equipment maintenance plans, technical manuals, and technical directives approved and issued by NAVAIRSYSCOM. O-level actions include limited calibration, and test and inspection functions necessary for fault isolation (troubleshooting) and repair verification, as appropriate. Scheduled (preventive) and unscheduled (corrective) maintenance actions are defined as follows:

a. Scheduled Maintenance. Scheduled maintenance is periodic inspection and/or servicing of equipment prescribed to be accomplished on a calendar, mileage, hours of operation, or other quantifiable basis. Its objective is to maintain AWSE in satisfactory operating condition by providing for systematic inspection, detection, and correction of incipient failures either before they occur or before they develop into major defects. Scheduled maintenance is performed using Maintenance Requirement Cards (MRCs) which are generated from the applicable MIM to facilitate a Planned Maintenance System (PMS) for each AWSE item. MRCs identify the maintenance tasks required to maintain an equipment in an effective operating condition and are arranged sequentially by work area and system. Reporting custodians may increase the depth

and frequency of any scheduled inspection, require additional inspections whenever excessive time has elapsed between inspections or when environmental or operational conditions are considered to have impaired the material reliability or integrity of the equipment. Inspections performed to a greater depth or at an increased frequency are logged, if required, as the type which would normally be performed and do not alter the schedule of the programmed inspections or servicing requirements.

NOTE

MRCs are optional for use by commercial or civil service staffed maintenance activities.

b. Unscheduled Maintenance. Unscheduled maintenance is corrective maintenance performed, as a result of failure, to restore a repairable item to a specified condition. It includes conditional inspections, fault isolation (troubleshooting), repair or replacement of components, adjustment, lubrication, test, calibration (if required), and preparation for shipment or storage.

c. Support Equipment (SE), AWSE, and Weapons Handling Equipment (WHE) preservation is designed to protect the material condition of equipment which is not expected to be used for extended periods of time. This equipment may be preserved at any time, regardless of material condition, when it is determined to be in the best interest of the equipment or activity. The Authorized Military Official (AMO)/Weapons Officer is responsible for determining when this equipment is required to be placed in preservation. For equipment placed in preservation per applicable MIMs or directives, all PMS inspections may be deferred until the equipment is removed from preservation. Equipment not placed in preservation shall receive corrosion prevention/treatment per applicable MIMs/MRCs. Preservation and corrosion prevention procedures are available in NAVAIR 17-1-125, Ground Support Equipment, Cleaning and Corrosion Control, for common AWSE and NAVAIR 01-1A-75 for peculiar AWSE. For standardized management of personnel and resources, activities may use the following categories to determine the level of preservation desired:

(1) Category A - SE/AWSE/WHE which has anticipated usage within the next 90 days. This equipment shall be maintained under current SE/PMS directives.

(2) Category B - SE/AWSE/WHE which could possibly be used within the next 180 days. This equipment may be placed in a minimum of Level I.

(3) Category C - SE/AWSE/WHE not needed for extremely long periods of time (in excess of 180 days) may be placed in Level II or III preservation depending on the resources at the geographical area.

(4) Levels of preservation SE/AWSE/WHE are defined below. Dehumidification (Level III) is preferred method of preservation: Level I: 0 - 90 days (plus or minus 3 days), Level II: 0 - 1 year, and Level III: 0 - indefinite.

d. Work performed on preserved SE/AWSE/WHE shall be directed by maintenance control, ordnance production control, monitored by work center supervisors and personnel assigned quality assurance responsibilities. Depreservation, maintenance, and the represervation of specific area where maintenance was performed shall be annotated in the corrective action block of the original deficiency Maintenance Action Form (MAF). The Quality Assurance Representative

(QAR)/Collateral Duty Inspector (CDI) in-process inspection shall ensure all preservation requirements are met after maintenance is performed. No additional depreservation/represervation MAF or logbook entry is required.

e. Type Wings, Marine Aircraft Wings (MAWs), or equivalent may waive or modify preservation requirements for aeronautical equipment undergoing extensive repairs or modification when the preservation would adversely affect the completion of the task.

8.2.4 Coordination and Administration. The using activity's Maintenance Control Officer shall ensure that AWSE is serviced, inspected, and maintained in accordance with prescribed requirements, and returned to the Intermediate maintenance activity for both scheduled and unscheduled Intermediate level maintenance.

CHAPTER 8.3

Intermediate Level Maintenance

Table of Contents

Paragraph	Subject	Page
8.3.1	General	8-3-1
8.3.2	Intermediate Level Maintenance Concept	8-3-1
8.3.3	Intermediate Level Maintenance Actions	8-3-1
8.3.4	Armament Handling Equipment and Weapons Handling Equipment	8-3-3
8.3.5	Armament Systems Test Equipment and Weapons Test Equipment	8-3-3
8.3.6	Record Keeping and Reporting	8-3-3
8.3.7	Interface Requirements	8-3-4
8.3.8	Intermediate Maintenance Activity Support	8-3-5
8.3.9	Shop-Installed Support Equipment Maintenance	8-3-6
8.3.10	Repairables Management	8-3-6
8.3.11	Individual Component Repair List (ICRL)	8-3-7

CHAPTER 8.3

Intermediate Level Maintenance

8.3.1 General. Intermediate level (I-level) maintenance enhances and sustains the combat readiness and mission capabilities of supported activities by providing quality and timely material support at the closest location with the lowest practical expenditure of resources. This chapter discusses the Armament Weapons Support Equipment (AWSE) functions, which are authorized and designated to be performed by a Navy Munitions Command (NMC) Detachments, Shipboard Weapons Departments, and Marine Corps Air Stations (Station Weapons). An Intermediate Maintenance Activity (IMA) comprises all departmental units responsible for providing support, afloat and ashore, to organizational units. Typically, an IMA consists of the Aircraft Intermediate Maintenance Department/Fleet Readiness Center (AIMD/FRC), Supply Department, Weapons Department or NMC Detachment, and Engineering Department. As an integral part of that activity, the AIMD is responsible for performing maintenance on the aeronautical equipment located at the ship or station supported. I-level maintenance actions for AWSE are associated with operation and repair; including scheduled (preventive) and unscheduled (corrective) maintenance, time-phased and event-phased inspections, cleaning, minor corrosion control, and servicing. Assignment of individual maintenance functions to a maintenance level allows maintenance activities to further plan and conduct the specific tasks they are required to perform. To determine the extent to which a repair action can be undertaken, the maintenance activity shall consult the appropriate Maintenance Instruction Manuals (MIMs), operating and service instructions, or technical directives that apply to each supported weapon system, component, or AWSE item. AWSE is allocated to I-level maintenance establishments by Commander, Naval Air Systems Command (COMNAVAIRSYSCOM) as described in Chapter 8.1 of this volume. Volume I, Chapter 2.2 defines I-level maintenance functions and Chapter 2.3 assigns responsibilities that apply to AWSE.

8.3.2 Intermediate Level Maintenance Concept. IMAs perform scheduled (preventive) and unscheduled (corrective) maintenance actions which are beyond the scope and capability of Organizational level (O-level) maintenance and are necessary to maintain or restore AWSE to inherent design levels of performance, reliability, and material condition. IMAs are staffed by trained personnel and equipped with specialized tools, test sets/stations, and support equipment for support equipment.

8.3.3 Intermediate Level Maintenance Actions. In addition to the actions authorized at the O-level, IMAs are authorized to perform all those repair, replacement, modification, and overhaul actions which are prescribed in the applicable equipment maintenance plans, technical manuals, and technical directives approved and issued by COMNAVAIRSYSCOM. I-level actions include limited calibration, and test and inspection functions necessary for fault isolation (troubleshooting) and repair verification, as appropriate. Scheduled (preventive) and unscheduled (corrective) maintenance actions are defined as follows:

a. Scheduled Maintenance. Scheduled maintenance is periodic inspection and/or servicing of equipment prescribed to be accomplished on a calendar, mileage, hours of operation, or other

quantifiable basis. Its objective is to maintain AWSE in satisfactory operating condition by providing for systematic inspection, detection, and correction of incipient failures either before they occur or before they develop into major defects. Scheduled maintenance is performed using Maintenance Requirement Cards (MRCs) which are generated from the applicable MIM to facilitate a Planned Maintenance System (PMS) for each AWSE item. MRCs identify the maintenance tasks required to maintain an equipment in an effective operating condition and are arranged sequentially by work area and system. Reporting custodians may increase the depth and frequency of any scheduled inspection, require additional inspections whenever excessive time has elapsed between inspections or when environmental or operational conditions are considered to have impaired the material reliability or integrity of the equipment. Inspections performed to a greater depth or at an increased frequency are logged, if required, as the type which would normally be performed and do not alter the schedule of the programmed inspections or servicing requirements.

b. Unscheduled Maintenance. Unscheduled maintenance is corrective maintenance performed, as a result of failure, to restore a repairable item to a specified condition. It includes conditional inspections, fault isolation (troubleshooting), repair or replacement of components, adjustment, lubrication, test, calibration (if required), and preparation for shipment or storage.

c. Support Equipment (SE), AWSE, and Weight Handling Equipment (WHE) preservation is designed to protect the material condition of equipment which is not expected to be used for extended periods of time. This equipment may be preserved at any time, regardless of material condition, when it is determined to be in the best interest of the equipment or activity. The Authorized Military Official (AMO)/Weapons Officer is responsible for determining when this equipment is required to be placed in preservation. For equipment placed in preservation per applicable MIMs or directives, all PMS inspections may be deferred until the equipment is removed from preservation. Equipment not placed in preservation shall receive corrosion prevention/treatment per applicable MIMs/MRCs. Preservation and corrosion prevention procedures are available in NAVAIR 17-1-125, Ground Support Equipment, Cleaning and Corrosion Control, for common AWSE and NAVAIR 01-1A-75 for peculiar AWSE. For standardized management of personnel and resources, activities may use the following categories to determine the level of preservation desired:

(1) Category A - SE/AWSE/WHE which has anticipated usage within the next 90 days. This equipment shall be maintained under current SE/PMS directives.

(2) Category B - SE/AWSE/WHE which could possibly be used within the next 180 days. This equipment may be placed in a minimum of Level I.

(3) Category C - SE/AWSE/WHE not needed for extremely long periods of time (in excess of 180 days) may be placed in Level II or III preservation depending on the resources at the geographical area.

d. The following are the levels of preservation SE/AWSE/WHE and definitions. Dehumidification (level III) is preferred method of preservation. Level I: 0 - 90 days (plus or minus 3 days), Level II: 0 - 1 year, and Level III: 0 - indefinite.

e. Work performed on preserved SE/AWSE/WHE shall be directed by maintenance control, ordnance production control, monitored by work center supervisors and personnel assigned

quality assurance responsibilities. Depreservation, maintenance, and the represervation of specific area where maintenance was performed shall be annotated in the corrective action block of the original deficiency Maintenance Action Form (MAF). The Quality Assurance Representative (QAR)/Collateral Duty Inspector (CDI) in-process inspection shall ensure all preservation requirements are met after maintenance is performed. No additional depreservation/represervation MAF or logbook entry is required.

f. Type Wings, Marine Aircraft Wings (MAWs), or equivalent may waive or modify preservation requirements for aeronautical equipment undergoing extensive repairs or modification when the preservation would adversely affect the completion of the task.

8.3.4 Armament Handling Equipment and Weapons Handling Equipment. The numbers of different aircraft, multiple configurations, and unique requirements preclude listing all the applicable authorized handling equipment used at I-level maintenance in this manual. However, the following reference manuals provide a listing of specific items of handling equipment along with a description of each item, applications and uses of the equipment, and any associated items. In addition, the manuals list the command cognizance for each handling equipment item, the in-service engineering agent, and applicable authorized technical manuals for each individual item:

a. NAVAIR 11-120A-1.1 (Volume 1), Airborne Weapons Packaging/Handling/Stowage (Shipboard).

b. NAVAIR 11-120A-1.2 (Volume 2), Airborne Weapons Packaging/Handling/Stowage (Shipboard).

c. NAVAIR 11-140-25, Armament Handling Equipment Configuration Manual, All Aircraft.

d. NAVAIR 19-100-1.1, Approved Handling Equipment for Weapons and Explosives (Adapters through Jigs).

e. NAVAIR 19-100-3, Armament Weapons Support Equipment Miscellaneous Adapters, I-level Maintenance with Illustrated Parts Breakdown (IPBs).

8.3.5 Armament Systems Test Equipment and Weapons Test Equipment. Test equipment used at IMA is specified in the applicable technical manual for the respective type of unit under test.

8.3.6 Record Keeping and Reporting. In addition to conforming to local command reporting requirements, IMAs shall record maintenance actions and comply with tracking transaction reporting requirements prescribed in Chapter 8.1 of this Volume when AWSE items are transferred. They are also responsible for originating and/or maintaining the AWSE documentation listed below. All records must accompany the AWSE item when transferred to an Organizational or Depot level maintenance activity, and the transaction document shall be forwarded to the data services facility.

a. Work Request Customer Service (OPNAV 4790/36A). This form is used to request work or assistance from a depot overhaul point that is beyond the requesting activity's maintenance capability. IMAs use this form to request assistance from Depot level activities to complete components delayed in process due to lack of facilities for check and test, or for processing not normally required, such as heat treatment, plating, magnaflux, and machine shop.

b. Support Equipment Depot Rework Schedule Request (OPNAV 4790/80). This form is used to request scheduling of end items of support equipment that are beyond the requesting I-level activities maintenance capability.

c. Metrology Equipment Recall and Report Card (Green Copy). That portion of the maintenance organization's workload devoted to the calibration and repair of test and measuring systems is documented on the metrology equipment recall and report card. This form facilitates the interface of the Metrology Automated System for Uniform Recall and Reporting (MEASURE) and Aviation Maintenance and Material Management (3M) systems. This data is required for the immediate management needs of the calibration activity. The form prescribed herein for recording data meets these requirements. The Aviation 3M System data records produced from the metrology equipment recall and report card are the same as those from the Visual Information Display System (VIDS)/MAF data records. This form provides for recording, among others, the following types of data:

(1) A job control number.

(2) The identity of the work center, support and supported organizations in which the maintenance action is performed.

(3) How the malfunction or deficiency failure occurred, when it was discovered, and action taken to correct it.

(4) The signatures of individuals performing, inspecting, and supervising the maintenance.

8.3.6.1 Technical Directives (TDs). I-level maintenance personnel are responsible for assuring that Support Equipment Changes (SECs) and Support Equipment Bulletins (SEBs) for AWSE directed to that level are complied with. TD compliance is documented using the TD compliance VIDS/MAF. Maintenance control schedules all TD compliance actions and initiates all TD compliance VIDS/MAFs. If the TD action is beyond the capability of I-level maintenance, the AWSE item must be sent to Depot level maintenance.

8.3.7 Interface Requirements. To satisfactorily perform its functions, the IMA must have close liaison with supported organizational units and Depot level activities, as well.

8.3.7.1 Organizational Level Maintenance Interface. Liaison shall ensure current and accurate requirements related to:

a. Deployment schedules (for projecting temporary additional duty). This should be part of the Monthly Maintenance Plan (MMP).

b. AWSE scheduled maintenance inductions (for scheduling purposes).

c. Organizational level SE training and licensing.

d. No defects (action taken, Code A, on the VIDS/MAF) for maintenance actions from the Organizational level unit to facilitate efficient, effective, and timely troubleshooting.

8.3.7.2 Depot Level Maintenance Interface. Liaison shall ensure adequate understanding of local customer service procedures. As used in this manual, customer service is the provision of Depot level services, including emergency check, test, minor repair, manufacture of parts,

heat treatment, plating, machine shop services, or other efforts as directed by the COMNAVAIR-SYSCOM in the processing of material to relieve Not Mission Capable Supply (NMCS), Partial Mission Capable Supply (PMCS), and work stoppage conditions. SE requiring extensive repairs or overhaul, including items causing NMCS, PMCS, or work stoppage conditions will not normally be processed by customer service. However, when situations warrant, COMNAVAIR-SYSCOM, in coordination with the cognizant functional wing, may authorize customer service for specified items to relieve NMCS, PMCS, or work stoppage conditions. Refer to Chapter 8.4 for further details.

8.3.8 Intermediate Maintenance Activity Support. Instances will occur where a repairable component, which is beyond the capability of the local maintenance activity, is shipped to an off-station IMA for repair and return. Procedures for such actions are described below.

NOTE

This is an Inter-IMA action for both on-station and off-station for Marine Corps activities.

8.3.8.1 Processing defective components for shipment to an off-station IMA for repair and return.

a. Supply shall receive the defective component in accordance with local supply procedures.

b. Supply shall deliver the defective component, new VIDS/MAF Copies 1 through 5, original VIDS/MAF Copy 4, and records to the Aeronautical Material Screening Unit.

NOTE

Components shipped as Ready-For-Issue (RFI) but without a RFI tag will be inducted into AIMD/FRC on a VIDS/MAF for check and test. The component control section will prepare the VIDS/MAF work request using a supply job control number.

c. The component control section shall process the VIDS/MAF Copy 2 in accordance with the condition block (RFI or Beyond Capability of Maintenance (BCM)) checked on the VIDS/MAF Copy 2 to the data services facility.

d. Supply shall ship the component, new VIDS/MAF Copy 4, records, and DD Form 1348-1 in accordance with local supply procedures.

e. Those activities using the Naval Aviation Logistics Command Management Information System (NALCOMIS), refer to the system user's manual for specific data requirements for processing defective components off-station.

8.3.8.2 Processing components returned from an off-station IMA as a result of a previous local BCM action.

a. Supply shall receive the component, VIDS/MAF Copy 4, records, and DD 1348-1 in accordance with local supply procedures.

b. Supply shall deliver the RFI component and records to the customer. Non RFI (NRFI) components received shall be processed in accordance with local procedures.

c. Those activities using the NALCOMIS, refer to the system user's manual for specific data requirements for processing off-station repaired components.

8.3.9 Shop-Installed Support Equipment Maintenance. The procedures delineated below will be followed by production control on the planning, scheduling, performance, and recording of support equipment maintenance.

a. Originate separate folders by equipment serial number to file historical information of SE. Folders are to be divided into sections for scheduled and unscheduled maintenance.

b. Originate and maintain a support equipment custody and maintenance history record (OPNAV 4790/51) on all assigned SE as required.

c. List all SE inspections and TDs due in the MMP.

d. Issue VIDS/MAF to the appropriate work centers for all scheduled maintenance and TD compliance.

8.3.10 Repairables Management. All components inducted by the IMA shall be processed in accordance with the following procedures. Those activities using the NALCOMIS, refer to the system users manual for documentation and component processing details and procedures. In no case shall NRFI material be casually or carelessly handled merely because it is intended to undergo repair. Particular care shall be given to prevent further damage of repairable items that are to be returned to the Depot for overhaul.

8.3.10.1 Control of components processed by the IMA. When work on components in the IMA must be delayed due to an Awaiting Parts (AWPs) status, the component is turned in to the AWPs unit of the component control section. When work on components has been completed, return the component to material control for processing. Material control shall:

a. Receive the component and documentation from the work center. Ensure that VIDS/MAF copies 1 and 4 indicate the action taken.

b. Notify the Supply Support Center (SSC) that the component is ready for pickup.

c. Obtain SSC signature of receipt on VIDS/MAF copy 1.

d. Turn in the component, VIDS/MAF copy 4, logs, records, and condition tag to the SSC.

e. Forward VIDS/MAF copy 1 to quality assurance via production control.

8.3.10.2 Preservation, Packaging, and Handling. The IMA is responsible for internal and external preservation (prior to packing) of all components. Components shall be adequately protected for local routing to the supply department packing and preservation section. All aeronautical material, regardless of its status (RFI or NRFI) shall be preserved, packaged, and handled by supply and maintenance personnel in such a manner as to prevent damage or deterioration. When it is positively known that a component repaired by an IMA will be reissued to local operating units in a reasonably short time, it need only receive the minimum amount of preservation and packaging to ensure positive identification and short-time protection of the item.

NOTE

All printed circuit assemblies or micro components will be considered to be Electrostatic Discharge (ESD) sensitive sensitive while being handled, packaged, repaired, and transported. Guidance and direction for the identification, handling, and protection of ESD-sensitive components shall be in accordance with NAVSUPINST 4030.46. NAVSUP P-484 details the proper methods and materials used in packaging ESD-sensitive components. Supply assets shall be tracked to ensure re-inspection or represervation is performed per applicable preservation and technical manuals.

NOTE

Any material to be released to an authorized contractor's representative or shipped directly to a contractor's plant shall be processed through the Supply Department. The Supply Department may issue the material on a custody basis only after receiving the authority to do so from the Cognizant Field Activity (CFA).

8.3.10.3 Handling and preservation of Engineering Investigation (EI) or Product Quality Deficiency Report (PQDR) material. Originating IMAs shall turn in defective material to supply for holding and shipment. The IMA shall handle and prepare EI or Quality Deficiency Report (QDR) material as follows:

a. Maintain an "as is" condition.

b. Take special care to cap and package material immediately upon removal from the system to prevent corrosion, contamination, or other damage that may contribute to confusion or loss of possible cause factors. Do not attempt any adjustments, disassembly, or perform any type of cleaning. If any adjustment, disassembly, or cleaning was done during a local investigation, a list of particulars describing the local investigation must accompany the material to the CFA.

c. Forward samples of fluid in clean, sealed, authorized containers. If contamination is suspected, annotate sample bottles accordingly.

d. Do not attempt to reassemble fragments of failed material. Wrap each fragment separately to prevent damage caused by movement of one fragment against another. When feasible, forward associated accessories, components, or material suspected of contributing to the malfunction or mishap.

e. Attach the VIDS/MAF, EI request or QDR, and any other applicable records and documentation to the equipment being shipped. Material control shall ensure the VIDS/MAF is marked "EI" or "QDR" with 3-inch red letters as not to obscure vital data elements.

8.3.11 Individual Component Repair List (ICRL).

8.3.11.1 The ICRL is a management tool that provides an IMA with the ability to relate maintenance capability to individual items. NAVSUP WSS, Philadelphia, PA maintains the master database and publishes the ICRL.

8.3.11.2 The master ICRL data file is established at NAVSUP GLS AMMO, Philadelphia, PA. The purpose of a central ICRL data repository is to produce an ICRL for each selected IMA. Capability data in the ICRL is based on IMA input. The ICRL contains existing repair capability data on items processed by the IMA based on past experience. The ICRL will also contain

target capability databased on Source, Maintenance, and Recoverability (SM&R) codes. The ICRL also identifies fixed price allowance items that are capable of local repair, targeted for future repair, or for which repair is not planned. NAVSUP WSS, Philadelphia, PA, controlling custodians, and individual IMAs shall use the ICRL as a factor in the negotiation process for determination of site operational support inventory or fixed allowance quantities and allowance change request authorizations. Access to the ICRL data file is available to users of the teletypewriter communication network. Correction and update of ICRL data is dependent on IMA and NAVSUP WSS, Philadelphia, PA inputs.

8.3.11.3 Policy. The following policies apply to the maintenance, management, and use of the ICRL.

a. IMA component repair capability data shall reside in a central database at NAVSUP WSS, Philadelphia, PA.

b. ICRL documents and associated reports shall be published and distributed to each IMA, controlling custodian, and headquarters level command.

c. Direct liaison and contact for reporting reconciliation purpose shall be conducted between NAVSUP WSS, Philadelphia, PA and IMAs.

d. NAVSUP WSS, Philadelphia, PA shall provide special ICRL products at the request of controlling custodians, COMNAVAIRSYSCOM, the Command (NAVSUPSYSCOM) and IMAs.

e. The Standard ICRL Program is in consonance with existing maintenance and material management policies promulgated by NAVSUPINST 4440.160A.

f. IMA supply managers shall consult with their maintenance counterparts regarding ICRL management and shall actively support and participate in local efforts to improve repair capability.

g. Precision Measuring Equipment (PME) may be added to individual ICRLs at the respective IMAs discretion or as directed by the Controlling Custodian or Type Commander (TYCOM).

h. Repairable SE components, as well as locally repairable components, shall be included on each activity's ICRL.

i. Individual IMAs submit ICRL additions, deletions, and changes to NAVSUP WSS, Philadelphia, PA.

8.3.11.4 ICRL General Use Procedures. It is the work center supervisor's responsibility to ensure that the IMA's ICRL shows the most current status of the work center's repair capability. To do that, each work center verifies their part of the ICRL quarterly. The Supply Department's master stock item records shall reflect local repair capability data. The Supply Department shall use the local ICRL as a source of data when recomputing repairables allowances. Supply shall maintain progress records on attainment of local repair capability for designated I-level fixed allowance items.

8.3.11.4.1 ICRL Updating Procedures. If a component is inducted into a work center with an ICRL card (NAVSUP 1364), the work center supervisor shall annotate the appropriate blocks and forward the card to the Maintenance Officer or their representative.

8.3.11.4.2 AIMD/FRC shall publish a maintenance instruction amplifying ICRL maintenance and use. That shall be a combined AIMD/FRC, Weapons Department or NMC Detachment, and supply effort. AIMD and supply shall each designate an ICRL manager, who is responsible for ICRL distribution, update, training, audit, and coordination. The Weapons Department or NMC Detachment is responsible for ensuring and verifying that WSE in its subcustody, which is repairable under applicable SM&R codes, is included on the AIMD/FRC ICRL.

8.3.11.4.3 The ICRL audit shall consist of the following steps:

a. Select items from current production reports to verify that ICRL transactions are being done and recorded.

b. Review selected work requests for ICRL application documentation.

c. Spot check Individual Material Readiness List (IMRL) SE components for inclusion on the ICRL.

d. Validate ICRL reports and files for accuracy and completeness.

e. Check actions being taken to improve repair capability for items shown on the ICRL reports.

8.3.11.4.4 AIMD/FRC will ensure that production divisions processing repairables not inducted through a central aeronautical material screening unit (for example: engines, SE, and drop tanks) shall record repair data and originate ICRL input cards.

8.3.11.4.5 Supply (in Marine Corps activities, the MALS) shall ensure ICRL cards are processed to NAVSUP WSS, Philadelphia, PA in a timely fashion.

8.3.11.4.6 Those activities using the NALCOMIS, refer to the system user's manual for specific details and procedures to maintain the ICRL.

NOTE

The standard individual component repair list change record (NAVSUP 1364) is available through the supply system.

CHAPTER 8.4

Depot Level Maintenance

Table of Contents

Paragraph	Subject	Page
8.4.1	General	8-4-1
8.4.2	Depot Level Maintenance Concept	8-4-1
8.4.3	Depot Level and Maintenance Actions	8-4-1
8.4.4	Weapons Test Equipment	8-4-1
8.4.5	Weapons Handling Equipment	8-4-6
8.4.6	Logistics Support Equipment (LSE)	8-4-7
8.4.7	Customer Service	8-4-16

List of Illustrations

Figure	Title	Page
8-4-1	Assignment of Weapons Test Equipment to Depot Level Maintenance Establishments	8-4-3
8-4-2	Weapons Test Equipment Technical Publications Matrix	8-4-4
8-4-3	Assignment of Container Maintenance Actions by Maintenance Level	8-4-8
8-4-4	Assignment of Container Maintenance Responsibilities to Depot Level Maintenance Establishments	8-4-9
8-4-5	Air Launched Missile Container Technical Publications Matrix	8-4-12

CHAPTER 8.4

Depot Level Maintenance

8.4.1 General. Depot level (D-level) activities perform Armament Weapons Support Equipment (AWSE) maintenance that is beyond the responsibilities or capabilities of Organizational and Intermediate levels. D-level maintenance functions are carried out at industrial establishments having more extensive facilities, skills, and materials than Fleet and field activities, or at the operational site(s) by field teams dispatched by the depot(s) if circumstances warrant. D-level maintenance establishments may be government-owned/operated (organic), government owned and contractor operated, or contractor-owned/operated. Establishments having limited depot capabilities are designated as All-Up-Round (AUR) Depots are Navy Munitions Command (NMC) CONUS East Division (CED) Detachment Yorktown, VA, NMC CONUS West Division Detachment Seal Beach Annex Fallbrook, CA, Naval Airborne Weapons Maintenance Unit One (NAWMU-1), Naval Surface Warfare Center Division (NAVSURFWARCENDIV) Crane IN, Naval Air Warfare Center Weapons Division (NAVAIRWARCENWPNDIV) Pt. Mugu CA, Letterkenny Army Depot, Boeing Aerospace Corp., and Texas Instruments. D-level AWSE is primarily comprised of Weapons Support Equipment (WSE), which includes Weapons Handling Equipment (WHE), and weapons test equipment, and Logistics Support Equipment (LSE) such as airborne weapons containers. WSE is allocated to D-level maintenance establishments by Commander, Naval Air Systems Command (COMNAVAIRSYSCOM) as described in Volume II, Chapter 8.1.

8.4.2 Depot Level Maintenance Concept. D-level maintenance activities perform scheduled (preventive) and unscheduled (corrective) maintenance actions which are beyond the scope and capability of Intermediate level maintenance and are necessary to maintain or restore AWSE to inherent design levels of performance, reliability, and material condition. D-level maintenance activities are staffed by trained personnel and equipped with specialized tools, test sets/stations, and Support Equipment (SE) for SE.

8.4.3 Depot Level and Maintenance Actions. In addition to those actions authorized at the Organizational and Intermediate levels, D-level maintenance activities are authorized to perform all repair, replacement, modification, and overhaul actions prescribed by the applicable equipment maintenance plans, technical manuals, and technical directives approved and issued by COMNAVAIRSYSCOM. Depot actions include test and inspection functions necessary for fault isolation (troubleshooting) and repair verification, and calibration, as appropriate. When deemed necessary by competent authority, D-level activities may be directed to manufacture AWSE components to meet operational requirements, and to provide assistance to the Organizational and Intermediate levels requiring professional engineering or technical support service functions.

8.4.4 Weapons Test Equipment. Weapons test equipment is comprised of specialized paraphernalia of electronic or electrical design used to test, maintain, or service airborne weapons.

Figure 8-4-1 depicts weapons test equipment assignments to the AUR Depot establishments who are authorized to perform the following maintenance actions in accordance with applicable technical manuals listed in Figure 8-4-2, in addition to those inspections, reports, and directives prescribed in Chapter 8.1. Any maintenance action that results in a change to the design, configuration or test procedures of a test set that is approved for proximity testing shall be reported to the Weapon Systems Explosive Safety Review Board (WSESRB) by the Assistant Program Manager, Logistics (APML) of that system.

8.4.4.1 Certification. Confidence in a weapons stockpile and the probability of mission success depend on the integrity of the weapons test system to provide an acceptable degree of assurance that weapons with a high probability of success are issued to the operating forces. Designated weapons test systems are used for initial acceptance, maintenance, rework, or ordnance assessment of air launched guided weapons (including surface and subsurface variants) which must be certified in accordance with NAVAIRINST 5400.67B (Certification Program for Navy Air Launched Guided Weapons). The test set certification program assures that a test system is capable by correctly assessing the quality of the item being tested. Certification is an evaluation of all test system elements, demonstration of acceptable correlation among similar test systems, and satisfactory long term performance and stability. The certification program is applicable to all designated test systems (automatic or manual) associated with the testing of air launched missiles and their integral components which are procured and maintained by COMNAVAIRSYSCOM. Responsibilities of the test set certification program are:

a. COMNAVAIRSYSCOM provides overall management authority, technical guidance, and resource sponsorship for the conduct of the certification program.

b. NAVSURFWARCENDIV, Corona, CA, provides technical management for the implementation of the weapons test equipment certification program.

c. Difference in recertification policy between production and maintenance test sets.

8.4.4.2 Certification Under Acquisition Reform. Acquisition Reform has generated a modification to the certification program. With a change from the three tiered maintenance process to a two tiered process, and the contractor assuming responsibility for the Ready For Issue (RFI) status of AUR missile, the contractor has been released from the process of mandatory certification of the lower level test equipment. The AUR missile test equipment requires an initial certification with follow-on monitoring, as required, to ensure compliance with the performance specifications.

8.4.4.3 Calibration. All peripheral precision measuring equipment used for test, diagnostics, or alignment of the weapons test equipment item shall be calibrated in accordance with NAVAIRINST 13640.1A (COMNAVAIRSYSCOM METCAL Program) and each item's calibration cycle established by the NAVSURFWARCENDIV Corona Metrology Engineering Branch. The items consist of meters, spectrum analyzers, pressure gauges, etc. Calibration inspections consist of scheduled periodic performance evaluations and correction requirements. Items requiring calibration are listed in NAVAIR 17-35MTL-1 (Metrology Requirements List). Depot level maintenance personnel shall ensure that all equipment requiring calibration are identified under the Metrology Automated System for Uniform Recall and Reporting (MEASURE) system. Special attention must be given to new or recently received items which may not have been previously identified. Procedural details are described in the MEASURE Users Manual.

Test Equipment	Weapons System	NMC CONUS West Division Detachment Seal Beach Annex Fallbrook	NMC CONUS East Division Detachment Yorktown	Boeing Aerospace	Army Depot Letterkenny	Alliant Tech Systems	Raytheon Co.	Naval Airborne Weapons Maintenance Unit One Guam
AN/GYQ-75A(V)2	AMRAAM		X				X	
AN/DSM-156D	SPARROW		X				X	X
AN/DSM-132A	SIDEWINDER	X	X					X
AN/DSM-140	SIDEWINDER	X	X					X
AN/DSM-152B	SIDEWINDER	X	X					X
AN/GYQ-79	SIDEWINDER AIM-9X/JDAM						X	X
AN/GYQ-79A	AMRAAM JDAM/Laser JDAM JSOW SIDEWINDER 9X		X					X
TTU-574/E24A	SIDEWINDER AIM-9X							X
ADU-891(V)1/E	AMRAAM SIDEWINDER 9X		X			X	X	X
AN/DSM-127	HARPOON		X					
AN/DSM-127C	SLAM-ER			X				
CMBRE+ AN/GYQ-79	AARGM				X			X
AN/DSM-160B	HARM				X			X
AN/GSM-396A	HARM				X			X
TTU-519/E	MAVERICK	X	X					
SMU-127/E	MAVERICK	X	X					
SM-787/DSM	MAVERICK	X	X					

Figure 8-4-1. Assignment of Weapons Test Equipment to Depot Level Maintenance Establishments

Test Equipment	Weapon System	Depot Level Maintenance Technical Manual
AN/DSM-127	HARPOON	AT-820HN-NWS-020, Test Set Intermediate Level Maintenance with Illustrated Parts Breakdown (IPB)
AN/DSM-127C	SLAM-ER	AT-820HN-NWS-Series, Test Set Intermediate Level Maintenance with IPB
CMBRE+ (AN/GYQ-79)	AARGM	NAVAIR 16-30-GYQ-79-2, AN/GYQ-79A Test Program Set CMBRE - 330112-3
AN/DSM-160B	HARM	NAVAIR 16-30DSM160-1, Test Set Intermediate Level Maintenance with IPB
AN/GSM-396A	HARM	TO 33D9-45-42-1, Operation and Maintenance with IPB, Guided Missile-Launcher Test Set, AN/GSM-396A
AN/GYQ-75A(V)2	AMRAAM	TO 33D9-53-108-1, Field Level Maintenance with IPB
TTU-519/E	MAVERICK	NAVAIR AT-820YA-GMT-000, Test Set Intermediate Level Maintenance with IPB
SMU-127/E	MAVERICK	NAVAIR AT-820YA-LTS-000, Laser Target Simulator Operation and Maintenance with IPB
SM-787/DSM	MAVERICK	TO 33D-14-70-1, Operation and Maintenance Instruction with IPB
AN/DSM-156D	SPARROW	NAVAIR 16-30DSM-156D.1.1, Test Set Intermediate Level Maintenance with IPB
AN/DSM-152B	SIDEWINDER	NAVAIR 16-30DSM-152B-1, Test Set Intermediate Level Maintenance with IPB
AN/GYQ-79	SIDEWINDER AIM-9X JDAM/Laser JDAM	NAVAIR 16-30GYQ-79-1, Organizational and Intermediate Maintenance, AN/GYQ-79 Computer Set, Digital, Operational and Maintenance with IPB
AN/GYQ-79A	AMRAAM JDAM/Laser JDAM JSOW SIDEWINDER AIM-9X	NAVAIR 16-30GYQ-79-2, Organizational and Intermediate Maintenance, AN/GYQ-79 Computer Set, Digital and ADU-891(V)1/E Adapter Group, Computer Test Set, Operational and Maintenance with IPB
TTU-574/E24A	SIDEWINDER AIM-9X	NAVAIR 11-140-6.1, Airborne Weapons Assembly Manual, Air-to-Air Tactical Missiles
ADU-891(V) 1/E	AMRAAM SIDEWINDER AIM-9X	NAVAIR 16-30GYQ-79-2, Organizational and Intermediate Maintenance, AN/GYQ-79A Computer Set, Digital, Operational and Maintenance with IPB

Figure 8-4-2. Weapons Test Equipment Technical Publications Matrix

8.4.4.3.1 Calibration Contractor Facilities. The contractor has been released from complying with MIL-STD-45662. This means that the internal calibration services and standards are no longer monitored by government personnel.

8.4.4.4 Cleaning and Corrosion Control. Cleaning consists of removal of contaminants such as dirt, grease, salt spray, oil, and other elements that aid corrosion. Cleaning requires a knowledge of the materials and methods needed to remove each of these contaminants. As a general rule, the mildest cleaning method available that will work effectively is used. NAVAIR 01-1A-75 addresses the Depot level authorized materials, applications, and procedures for preventive and corrective corrosion control measures for weapons test equipment. Specifically, NAVAIR 01-1A-75 addresses the procedures to be followed for each type of substrate (metallic and non-metallic) to be cleaned, as well as the proper material to be used. All weapons test equipment are subject to preservation and painting procedures as part of Depot level maintenance.

8.4.4.5 Painting, Marking, Preservation, and Lubrication.

8.4.4.5.1 Paint Touchup. While material such as oils and sealants act as a preservative, painting is generally the most effective means of preserving metal. NAVAIR 01-1A-75 lists the cleaning materials, primers, and paints used in the preservation and corrosion control of airborne weapons test equipment. Painting is limited to the touchup of areas which have been damaged by abrasion, superficial scratches, or in areas where the paint has been removed in order to treat corrosion. Touchup painting is limited to 15 to 25 percent of any component. Painting requirements that exceed this criterion must be performed in an authorized painting area (usually an enclosed paint booth). Weapons test equipment unique materials are listed in NAVAIR 01-1A-75, while unique applications and procedures are listed in the applicable authorized technical manuals.

8.4.4.5.2 Marking. Repair facility personnel re-stencil all stenciling and marking obliterated or removed during repair or painting in accordance with the applicable authorized technical manual and NAVAIR 01-1A-75. Weapons support equipment unique hazardous materials are listed in NAVAIR 01-1A-75.

8.4.4.5.3 Preservation. Preservation and sealing shall be accomplished only when inspection results warrant and during maintenance procedures when replacement parts require it. Preservatives and sealants are applied using approved materials and methods listed in accordance with the applicable authorized technical manual and NAVAIR 01-1A-75.

8.4.4.5.4 Lubrication. Repair facility personnel perform lubrication in accordance with the applicable authorized technical manual and NAVAIR 01-1A-75.

8.4.4.6 Deficiency Reports. Deficiency reports are initiated against AWSE at Naval Airborne Weapons Maintenance Unit (NAWMU) and Naval Weapons Support Facilities (NWSF) when a test equipment deficiency is discovered during the performance of any assigned maintenance action. Deficiency reporting procedures are contained in Volume I, Chapter 4.6. In addition Naval Air Warfare Center Detachment personnel report weapons test equipment failures and inoperability to the cognizant COMNAVAIRSYSCOM APML via email.

8.4.4.7 Maintenance Data System (MDS) Reporting. All test equipment maintenance actions performed by Depot level maintenance establishments must be entered into the MDS. Mainte-

nance actions are reported on OPNAV 8600/12. Appendix K contains procedures and instructions for the completion of these forms.

8.4.4.8 Record Keeping and Reporting. In addition to complying with local command reporting requirements, Depot level maintenance establishments comply with WSE tracking transaction reporting requirements when WSE items are transferred. Chapter 8.1, Figure 8-1-4 of this volume depicts an example of a WSE tracking transaction report. Chapter 8.1 contains further information on the WSE tracking program.

8.4.5 Weapons Handling Equipment. WHE is a specialized category of WSE that provides direct support to the airborne weapon. WHE includes both peculiar and common ordnance handling and transportation equipment, as well as tools used for canning and decanning, magazine handling, and assembly of weapons and ordnance related commodities. AUR Depots and Designated Overhaul Points (DOPs) perform the following maintenance actions in accordance with applicable COMNAVAIRSYSCOM technical manuals and in addition to those inspections, reports, and directives prescribed in Chapter 8.1 of this Volume.

8.4.5.1 Record Keeping and Reporting. In addition to conforming to local command reporting requirements, AUR Depots and DOPs shall record WSE maintenance actions and comply with tracking transaction reporting requirements prescribed in Chapter 8.1 when WSE items are transferred.

8.4.5.2 Weight Testing and Verification. WHE used for lifting, such as hoisting beams and strongbacks, must be periodically weight tested to assure maximum safety and efficiency in its operation. All weight testing is conducted in accordance with the individual requirements of each item of WHE.

8.4.5.3 SE, AWSE, and WHE preservation is designed to protect the material condition of equipment which is not expected to be used for extended periods of time. This equipment may be preserved at any time, regardless of material condition, when it is determined to be in the best interest of the equipment or activity. The Authorized Military Official (AMO)/Weapons Officer is responsible for determining when this equipment is required to be placed in preservation. For equipment placed in preservation per applicable Maintenance Instruction Manuals (MIMs) or directives, all Planned Maintenance System (PMS) inspections may be deferred until the equipment is removed from preservation. Equipment not placed in preservation shall receive corrosion prevention/treatment per applicable MIMs/Maintenance Requirement Card (MRCs). Preservation and corrosion prevention procedures are available in NAVAIR 17-1-125, Ground Support Equipment, Cleaning and Corrosion Control, for common AWSE and NAVAIR 01-1A-75 for peculiar AWSE. For standardized management of personnel and resources, activities may use the following categories to determine the level of preservation desired:

a. Category A - SE/AWSE/WHE which has anticipated usage within the next 90 days. This equipment shall be maintained under current SE/PMS directives.

b. Category B - SE/AWSE/WHE which could possibly be used within the next 180 days. This equipment may be placed in a minimum of Level I.

c. Category C - SE/AWSE/WHE not needed for extremely long periods of time (in excess of 180 days) may be placed in Level II or III preservation depending on the resources at the geographical area.

8.4.5.4 Levels of preservation SE/AWSE/WHE are defined below. Dehumidification (Level III) is the preferred method of preservation.

a. Level I: 0 - 90 days (plus or minus 3 days).

b. Level II: 0 - 1 year.

c. Level III: 0 - indefinite.

8.4.6 Logistics Support Equipment (LSE). LSE consists of all equipment with facility-related functions, including airborne weapons containers. Such equipment is in the custody of many departments under the general heading of Packaging, Handling, Storage or Stowage, and Transportability (PHS&T). LSE includes that equipment used for the PHS&T of weapons and weapon components within the weapon logistics cycle ranging from manufacturer to the using activities magazine spaces. The using custodian is responsible for LSE maintenance within that activity's authorized capability while having custody of the item. If maintenance is required that is beyond the capability of the user, it shall be transferred to the next higher level of maintenance. Ultimate responsibility for equipment maintenance lies with the reporting custodian. Depot level maintenance establishments are assigned broad responsibilities for the maintenance of airborne weapons containers and other LSE as described below.

8.4.6.1 Airborne Weapons Containers. These LSE items are the packaging hardware of the PHS&T element of the weapons logistics system. Since container maintenance derives its priority from the mission- essential nature of the weapons themselves, containers must be capable of protecting their contents during all handling, shipping, and storage evolutions. Container maintenance is generally performed at two or more locations within the Depot level maintenance establishment: weapons repair facilities located within the authorized AUR Depots explosive operating buildings where airborne weapons are assembled, disassembled, tested, and containerized; and container repair facilities which are DOP industrial facilities geographically removed from the explosive operating areas. Figure 8-4-3 depicts authorized container maintenance actions performed by the repair facilities listed in Figure 8-4-4. Depot level container maintenance is conducted in accordance with the container volume of the Industrial Processing Guide (IPG) and the applicable approved technical manual. Each air launched missile system's IPG identifies material requirements for the processing of the air launched missile and provides industrial standards for work flow and work measurement. The IPG also provides a uniform work breakdown structure for the accomplishment of all required maintenance actions, including incorporation of authorized modifications. The IPG consists of a general information volume along with additional volumes dedicated to particular missiles. IPG data is used to facilitate workload planning, programming, and budgeting to enhance productivity and efficiency. Relevant technical documentation and publications are listed in Figure 8-4-5.

8.4.6.1.1 Weapons Repair Facilities Container Functions. In addition to the general maintenance actions prescribed by Chapter 8.1 of this Volume, AUR Depots perform the following specific functions.

8.4.6.1.1.1 Container Sentencing Inspection. Generally performed pier side on Fleet return material, the container sentencing inspection is a visual screening, to ensure that containers do not exhibit deficiencies which adversely affect personnel, safety or expose the contents to possible damage or deterioration, and to determine whether the containers are serviceable or unserviceable.

Maintenance Action	Maintenance Level	
	Weapons Repair Facility	Container Repair Facility
Container Sentencing Inspection	X	
Visual Inspection		
Interior	X	X
Exterior	X	X
Hardware Removal and Replacement		
Minor Hardware	X	X
Major Hardware	X	X
Testing		
Pressure		X
Weight		X
Integrity	X	X
Corrosion Control		
Hand Cleaning	X	X
Abrasive/Blast		X
Chemical Conversion	X	X
Paint Touchup		
Repaint (100%)		X
Repaint (25% or less)	X	X
Marking	X	X
Preservation	X	X
Lubrication	X	X
Repair		
Fiberglass Repair		X
Thermoplastics Repair		X
Metal Repair		X
Welding		
Gas Welding		X
Arc Welding		X
Thermoplastic Welding		X
Soldering		X
Condemnation Beyond Economical Repair		X
Technical Directive Compliance	X	X
Maintenance Data System Reporting	X	X
Record Keeping/Reporting	X	X

Figure 8-4-3. Assignment of Container Maintenance Actions by Maintenance Level

Container Designation	Weapons System	Army Depot Letterkenny	NMC CONUS West Division Detachment Seal Beach	NMC CONUS West Division Detach-ment Seal Beach Annex Fallbrook	NMC CONUS East Division Detachment Earle	NMC CONUS East Division Detachment Yorktown	Raytheon Company	NAWMU-1, Guam (I-Level Maintenance)
CNU-698/B	HARM/AARGM	X	X					
CNU-296/E	HARM/AARGM	X	X					
CNU-316/E	HARM/AARGM	X	X					
CNU-351/E	HARM/AARGM	X	X					
CNU-352/E	HARM/AARGM	X	X					
CNU-353/E	HARM/AARGM	X	X					
CNU-354/E	HARM/AARGM	X	X					
CNU-355/E	HARM/AARGM	X	X					
CNU-370/E	HARM/AARGM	X	X					
MK 592 MOD 1	HARPOON/SLAM-ER		X			X		
MK 607 MOD 0	HARPOON		X			X		
MK 618 MOD 1	HARPOON		X			X		
MK 619 MOD 0	HARPOON		X			X		
MK 620 MOD 0	HARPOON		X			X		
MK 621 MOD 0	HARPOON/SLAM-ER		X			X		
MK 622 MOD 0	HARPOON/SLAM-ER		X			X		
MK 630 MOD 0	HARPOON		X			X		
MK 631 MOD 0	HARPOON		X			X		
MK 632 MOD 0	HARPOON		X			X		
MK 641 MOD 0	HARPOON		X			X		
MK 642 MOD 0	HARPOON		X			X		
MK 648 MOD 0	HARPOON		X			X		
MK 649 MOD 0	HARPOON		X			X		
MK 650 MOD 0	HARPOON		X			X		
MK 651 MOD 0	HARPOON		X			X		
MK 654 MOD 0	HARPOON		X			X		
MK 655 MOD 0	HARPOON		X			X		
MK 656 MOD 0	HARPOON		X			X		
MK 658 MOD 0	HARPOON/SLAM-ER		X			X		
MK 664 MOD 1	HARPOON		X			X		
MK 666 MOD 0	HARPOON		X			X		
MK 694 MOD 1	HARPOON		X			X		
CNU-256/E	HARPOON/SLAM-ER		X			X		
CNU-257/E	HARPOON/SLAM-ER		X			X		
CNU-488/E	HELLFIRE			X		X		

Figure 8-4-4. Assignment of Container Maintenance Responsibilities to Depot Level Maintenance Establishments

Container Designation	Weapons System	Army Depot Letterkenny	NMC CONUS West Division Detachment Seal Beach	NMC CONUS West Division Detach-ment Seal Beach Annex Fallbrook	NMC CONUS East Division Detachment Earle	NMC CONUS East Division Detachment Yorktown	Raytheon Company	NAWMU-1, Guam (I-Level Maintenance)
CNU-132/E	MAVERICK		X			X		
CNU-477/E	MAVERICK		X			X		
CNU-472/E	MAVERICK		X			X		
CNU-189/E	SIDEWINDER		X	X		X		
CNU-274/E	SIDEWINDER		X	X		X		
CNU-283A/E	SIDEWINDER		X	X		X		
CNU-283/E	SIDEWINDER		X	X		X		
CNU-286/E	SIDEWINDER		X	X		X		
CNU-287/E	SIDEWINDER		X	X		X		
CNU-300/E	SIDEWINDER		X	X		X		
CNU-435/E	SIDEWINDER		X	X		X		
MK 16 MOD 0	SIDEWINDER	X	X	X		X		
MK 33 MOD 0	SIDEWINDER	X	X	X		X		
MK 34 MOD 0	SIDEWINDER	X	X	X		X		
MK 37 MOD 0	SIDEWINDER	X	X	X		X		
MK 287 MOD 0	SIDEWINDER	X	X	X		X		
MK 314 MOD 0	SIDEWINDER	X	X	X		X		
MK 386 MOD 0	SIDEWINDER	X	X	X		X		
MK 418 MOD 0	SIDEWINDER	X	X	X		X		
MK 418 MOD 1	SIDEWINDER	X	X	X		X		
MK 430 MOD 0	SIDEWINDER		X	X		X		
CNU-595/E	SLAM-ER				X	X		
CNU-125/E	SPARROW					X		
CNU-166/E	SPARROW					X		
CNU-199/E	SPARROW					X		
CNU-240/E	SPARROW					X		
CNU-379/E	SPARROW					X		
CNU-380/E	SPARROW					X		
HALFPACK W&F	SPARROW					X		
MK 12 MOD 0, 1 & 3	SPARROW					X		
MK 224 MOD 0	SPARROW					X		
MK 470 MOD 0 & 1	SPARROW					X		
ROIS and VENDOLATOR G&C	SPARROW					X		

Figure 8-4-4. Assignment of Container Maintenance Responsibilities to Depot Level Maintenance Establishments - contd.

Container Designation	Weapons System	Army Depot Letterkenny	NMC CONUS West Division Detachment Seal Beach	NMC CONUS West Division Detach-ment Seal Beach Annex Fallbrook	NMC CONUS East Division Detachment Earle	NMC CONUS East Division Detachment Yorktown	Raytheon Company	NAWMU-1, Guam (I-Level Maintenance)
CNU-333/E	TOW		X					
CNU-553/E	TOW		X					
CNU-415A/E	AMRAAM		X		X			
CNU-415B/E	AMRAAM		X		X			
CNU-415C/E	AMRAAM		X		X			
CNU-415D/E (Note 1)	AMRAAM		X		X			
CNU-415E/E (Note 1)	AMRAAM		X		X			
CNU-431/E	AMRAAM		X		X			
CNU-402/E	AMRAAM		X		X			
CNU-403/E	AMRAAM		X		X			
CNU-463/E	AMRAAM		X		X			
CNU-464/E	AMRAAM		X		X			
CNU-452/E	AMRAAM		X		X			
CNU-452A/E	AMRAAM		X		X			
CNU-555/E	AMRAAM		X					
CNU-575/E	JSOW					X		X
CNU-672/E	JSOW					X		X
CNU-609/E	SIDEWINDER AIM-9X						X	X
CNU-644/E	SIDEWINDER AIM-9X		X	X		X		X
CNU-645/E	SIDEWINDER AIM-9X		X	X		X		X

NOTES:

1. CNU-415D/E and CNU-415E/E may or may not have a reprogramming cable.

Figure 8-4-4. Assignment of Container Maintenance Responsibilities to Depot Level Maintenance Establishments - contd.

Air Launched Missile Container	Depot Level Maintenance Technical Manual
SPARROW	NAVAIR 11-75AIM7-1, Guided Missile System Shipping and Storage Containers, All MKs and MODs, SPARROW III, Intermediate and Depot Level Maintenance with IPB
AMRAAM	NAVAIR 11-75-65, Intermediate Level Maintenance and Depot Level Maintenance with IPB, AMRAAM Containers
SIDEWINDER	NAVAIR 11-75-64, Intermediate and Depot Level Maintenance with IPB, Shipping and Storage Containers, all MKs and MODs
HARM/AARGM	NAVAIR 11-75AGM88A-1, Shipping and Storage Containers, HARM Guided Missile, Intermediate and Depot Level Maintenance with IPB
MAVERICK	NAVAIR AW-001CE-RIP-000, Intermediate and Depot Level Maintenance with IPB MAVERICK Guided Missile Shipping and Storage Containers CNU-132/E, CNU-447/E, CNU-472/E
HARPOON/ SLAM-ER	a. AW-001HN-NWS-000, HARPOON Missile Shipping Containers for AUR configurations, AIR, ASROC Wings & Fins and Radome, with IPB b. AW-001HN-NWS-010, HARPOON Missile Shipping Containers for Missile Sections and CAP/CAN Wings and Fins, and WRAs/SRAs with IPB
HELLFIRE	AW-820YB-MIB-100, HELLFIRE Container Maintenance is a Work Package in the Missile Maintenance Manual
TOW	NAVAIR 11-140-6.2-3, Intermediate Inspection, Maintenance, and Packaging Procedures
SIDEWINDER AIM-9X	NAVAIR 11-140-6.1, Airborne Weapons Assembly Manual, Air-to-Air Tactical Missiles NAVAIR 11-140-6.3, Airborne Weapons Assembly Manual, Training Missiles

Figure 8-4-5. Air Launched Missile Container Technical Publications Matrix

Weapons repair facility personnel perform this inspection. The exteriors of the containers are inspected for the presence of AUR Depot seals, correct markings, corrosion, and/or damage. Interiors are inspected for evidence of corrosion, moisture intrusion, and damage. Containers having no disqualifying deficiencies are re-desiccated (if required) and returned to code "A" status. Those having minor defects are repaired by weapons repair facility personnel. Containers which require repairs beyond the capability of the weapons repair facility are sentenced to the container repair facility.

8.4.6.1.1.2 Minor Hardware Removal and Replacement. Weapons repair facility personnel remove and replace minor container hardware components as a result of deficiencies discovered during the container sentencing inspection. Items such as desiccant and the container humidity indicator are checked and replaced (if required) in accordance with the applicable authorized technical manual, and NAVAIR 01-1A-75.

8.4.6.1.1.3 Testing. Container integrity tests are performed after completion of container maintenance actions affecting the container in accordance with applicable authorized technical manual requirements.

8.4.6.1.1.4 Cleaning and Corrosion Control. Cleaning consists of the removal of contaminants such as dirt, grease, salt spray, oil, and other elements that aid corrosion. Cleaning requires a knowledge of the materials and methods needed to remove each of these contaminants. As a general rule, the mildest cleaning method available that will work effectively is used. NAVAIR 01-1A-75 addresses the Depot level authorized materials, applications, and procedures for preventive and corrective corrosion control measures for containers. Specifically, the NAVAIR 01-1A-75 addresses the procedures to be followed for each type of substrate (metallic and non-metallic) to be cleaned, as well as the proper material to be used. All containers are subject to preservation and painting procedures as part of Depot level maintenance. Weapons repair facility personnel clean all surfaces before applying the coating, ensuring that no cleaning material residue is trapped in fasteners, points, etc.; such areas can become contaminated easily and corrosion will occur.

8.4.6.1.1.5 Paint Touchup. While material such as oils and sealants act as a preservative, painting is generally the most effective means of preserving metal. NAVAIR 01-1A-75 lists the cleaning materials, primers, and paints used in the preservation and corrosion control of airborne weapon containers. Painting is limited to the touchup of areas which have been damaged by abrasion, superficial scratches, or in areas where the paint has been removed in order to treat corrosion. Touchup painting is limited to 15 to 25 percent of any section or component. Painting requirements that exceed this criterion must be performed in an authorized painting area (usually an enclosed paint booth). Container unique materials are listed in NAVAIR 01-1A-75, while unique applications and procedures are listed in the applicable authorized technical manuals.

8.4.6.1.1.6 Marking. Weapons repair facility personnel restencil all stenciling and markings obliterated or removed during repair or painting in accordance with the applicable authorized technical manual, and NAVAIR 01-1A-75. Container unique hazardous materials are listed in NAVAIR 01-1A-75.

8.4.6.1.1.7 Preservation. Preservation and sealing shall be accomplished only when inspection results warrant and during maintenance procedures when replacement parts require it. Preservatives

and sealants are applied in the missile assembly area using approved materials and methods listed in accordance with the applicable authorized technical manuals, and NAVAIR 01-1A-75.

8.4.6.1.1.8 Lubrication. Weapons repair facility personnel perform lubrication in accordance with the applicable authorized technical manual. Container gaskets are lubricated to retain pliability and corrosion preventative compounds are applied to camlocks to assure proper functioning, and NAVAIR 01-1A-75.

8.4.6.1.1.9 Deficiency Reporting. Deficiency reports are initiated at Depot level maintenance when a systematic deficiency is discovered which impairs the use of the container during the performance of any of the assigned weapons repair facility maintenance actions. Deficiency reporting procedures are contained in Volume I, Chapter 4.6 and the OPNAVINST 5102.1D.

8.4.6.1.1.10 Record Keeping and Reporting. Depot level maintenance is responsible for all record keeping and reporting actions related to container maintenance. Reporting requirements include updating data contained in the Ordnance Information System (OIS), which is updated via transaction item reporting and Serialized Lot Item Tracking System (SLITS) entries.

8.4.6.1.2 Container Repair Facility Functions. In addition to the general maintenance actions prescribed by Chapter 8.1, DOPs perform the following specific functions.

8.4.6.1.2.1 Visual Inspection. Container repair facility personnel conduct a visual inspection of all containers received from weapons repair facilities to screen the containers for defects. The exteriors of the containers and cradles are inspected for the presence of weapon station seals, correct markings, corrosion, and damage. The container's interiors are inspected for evidence of corrosion, moisture intrusion, and damage. Those containers having no disqualifying deficiencies are redesiccated (if required) and returned to code "A". The intent of sentencing and inspection is to ensure that a container does not exhibit deficiencies which would adversely affect personnel, safety, or expose the container contents to possible damage or deterioration. All other types of deficiencies are considered less significant and should not prevent the turnaround of a container to a code "A" asset. All visual inspections are conducted in accordance with the applicable authorized technical manual, and NAVAIR 01-1A-75.

8.4.6.1.2.2 Major and Minor Hardware Removal and Replacement. Container repair facility personnel remove and replace major and minor container hardware components as a result of deficiencies discovered during the visual inspection. Items such as desiccant and the container humidity indicator are checked and replaced (if required) in accordance with the applicable authorized technical manual, and NAVAIR 01-1A-75.

8.4.6.1.2.3 Repairing Plastic or Fiberglass. Container repair facility personnel repair shipping and storing containers which have fiberglass components to the extent necessary to perform their designed function. Fiberglass repair includes repair of surface gouges or small punctures, as well as large damaged areas. Container repair facility personnel clean affected areas, apply replacement patching, and sand or grind affected areas to achieve uniform density, form and fit. All repair actions are performed in accordance with the applicable authorized technical manual, and NAVAIR 01-1A-75.

8.4.6.1.2.4 Fabrication of Replacement Hardware. Container repair facilities fabricate both internal and external replacement hardware in accordance with design specifications, container drawings,

and the applicable authorized technical manual. Styrofoam or wooden dunnage is fabricated for internal blocking and bracing container contents. In addition, certain latches, bands, strapping material, and tie-down materials may be fabricated when replacement parts do not conform to specifications, not in stock, or inadequate for container use. Stenciling materials and non-actual sealing gaskets may also be fabricated for repair operations if materials and fabrication materials are approved.

8.4.6.1.2.5 Welding. Welding is the most common method of repairing container punctures, broken joints, severe cracks, broken clevis, loose brackets, support assemblies, and handle and latch assemblies. Welding procedures and materials are accomplished in accordance with MIL-W-6858 and the applicable authorized technical manual.

8.4.6.1.2.6 Testing. Container integrity tests are performed after completion of container maintenance actions affecting the container in accordance with applicable authorized technical manual requirements.

8.4.6.1.2.7 Cleaning and Corrosion Control. Cleaning consists of the removal of contaminants such as dirt, grease, salt spray, oil, and other elements that aid corrosion. Cleaning requires a knowledge of the materials and methods needed to remove each of these contaminants. As a general rule, the mildest cleaning method available that will work effectively is used. NAVAIR 01-1A-75 addresses the Depot level authorized materials, applications, and procedures for preventive and corrective corrosion control measures for containers. Specifically, NAVAIR 01-1A-75 addresses the procedures to be followed for each type of substrate (metallic and non-metallic) to be cleaned, as well as the proper material to be used. All containers are subject to preservation and painting procedures as part of Depot level maintenance. All cleaning and corrosion control actions are conducted in accordance with the applicable authorized technical manual.

8.4.6.1.2.8 Painting. While material such as oils and sealants act as a preservative, painting is generally the most effective means of preserving metal. NAVAIR 01-1A-75 lists the cleaning materials, primers, and paints used in the preservation and corrosion control of airborne weapon containers. Container repair facilities are authorized to perform complete container repainting. Container unique materials, applications, and procedures are listed in the applicable authorized technical manuals, and NAVAIR 01-1A-75.

8.4.6.1.2.9 Marking. Container repair facility personnel shall restencil all markings obliterated or removed during repair or painting in accordance with the applicable authorized technical manual and NAVAIR 01-1A-75.

8.4.6.1.2.10 Preservation. Preservation and sealing shall be accomplished only when inspection results warrant and during maintenance procedures when replacement parts require it. Preservatives and sealants are applied in the missile assembly area using approved materials and methods listed in accordance with the applicable authorized technical manuals, and NAVAIR 01-1A-75.

8.4.6.1.2.11 Lubrication. Container repair facility personnel perform lubrication in accordance with the applicable authorized technical manual. Container gaskets are lubricated to retain pliability and corrosion preventative compounds are applied to camlocks to assure proper functioning, and NAVAIR 01-1A-75.

8.4.6.1.2.12 Grit Blasting. Most surface corrosion and inter-granular corrosion can be treated using applicable cleaning and corrosion control material, including abrasive nylon matting, detergent , cleaning solvent, or mechanical methods. Removal of heavy corrosion, surface pitting, and preparation of containers for complete painting is usually accomplished using a hand-held grit blaster. Grit blasting is the most effective method for removing surface corrosion and deep scratches without damaging the structural integrity and utility of the container. Grit blasting operations allow for complete surface stripping of corrosion and primer, repriming, and the complete repainting of containers.

8.4.6.1.2.13 X-Raying. X-Raying involves a nondestructive inspection used primarily to assess the quality and structural integrity of welded joints, seals, and brackets. Container repair facilities perform portable X-Ray of affected welds when inspection and acceptance criteria are critical and to insure proper protection of the internal contents during storage and transportation of air launched weapons and components.

8.4.6.1.2.14 Technical Directives (TDs). In addition to complying with TDs, DOPs also assist in the development and review of Engineering Change Proposals (ECPs), development of the resulting TDs, and verification of the TDs prior to implementation.

8.4.6.1.2.15 Record Keeping and Reporting. Depot level maintenance is responsible for all record keeping and reporting actions related to container maintenance. Reporting requirements include updating data contained in the OIS, which is updated via transaction item reporting and SLITS entries.

8.4.6.2 Ship Loading and Underway Replenishment Equipment (URE). Ship loading and URE includes specialized handling and transfer devices which provide support to the packaged weapon during ships' loading and underway replenishment operations. Examples of ship loading and URE include connected replenishment slings, vertical replenishment pole pendants, spreader bars, beams, missile transfer dollies, etc. All equipment is primarily used for ships' loading and unloading and ship-to-ship transfer operations involving general supplies and explosive ordnance commodities.

8.4.6.3 Installed Shipboard and Shore-Based Equipment (ISE). ISE includes both specialized and general equipment provided as a part of the basic facility which functions in support of weapons handling and transfer operations. Examples of such equipment include mechanical dunnaging, C-grabs, bi-rail or monorail hoists, tie-downs, davits, bomb elevators, conveyors, and other fixed or moveable handling equipment.

8.4.6.4 Industrial Material Handling Equipment (MHE). Industrial MHE is comprised of commercially available industrial equipment which is approved for use in ammunition and explosive ordnance handling operations. Examples include such items as forklifts, warehouse tractors, pallet trucks, platform trucks, etc.

8.4.6.5 Ordnance Handling Vehicles (OHVs). OHVs include those vehicles which have been approved for over-the-road transport and handling of ammunition and explosive ordnance. Examples of such equipment include trucks, trailers, bomb service trucks, etc.

8.4.7 Customer Service. As used in this manual, customer service is the provision of Depot level services, including emergency check, test, minor repair, manufacture of parts, heat treat-

ment, plating, machine shop services, or other efforts as directed by COMNAVAIRSYSCOM in the processing of material to relieve Non Mission Capable Supply (NMCS), Partial Mission Capable Supply (PMCS), and work stoppage conditions.

8.4.7.1 Background. Customer service was instituted to provide support to Fleet aviation units in their technical and material maintenance problems. This service is extended to all other aviation operating and maintenance activities and units.

8.4.7.2 Scope. The policies here apply to all operation, maintenance, or material support of aeronautical material and equipment. Customer service required for other aviation type work will be accomplished by the Depot level activity, provided funds are made available to cover the cost of such service and manpower is available without jeopardizing aviation type workload.

8.4.7.3 Policy. Volume I, Section 2 assigns the responsibility for the repair of aeronautical components and equipment to the Navy and Marine Corps maintenance level. Particular emphasis is placed upon the repair functions within their capability. Emphasis must also be placed on developing the necessary repair capability within these Intermediate Maintenance Activities (IMAs) Customer service is intended to supplement, not replace, existing supply and Intermediate level support. To avoid duplication of effort in supply and maintenance activities, requests will only be submitted or accepted from IMAs. Further, each request will certify that the required function is beyond the capability of the supporting IMA and that a replacement could not be easily obtained.

8.4.7.4 Actions. As circumstances warrant, assistance will be provided through customer service procedures. Minor repair only includes the correction of specific deficiencies or replacement of malfunctioning minor parts requiring special tools, test equipment, or facilities not available at IMAs. Material submitted for customer service must require only limited processing beyond the depth stated on the work request, or that necessary to return the component to RFI condition.

8.4.7.4.1 The program for the scheduled calibration of Precision Measuring Equipment (PME) is not considered a part of customer service within the definition of this manual. However, calibration of equipment on an unscheduled basis to preclude NMCS/PMCS and work stoppage condition may be authorized by the Aircraft Controlling Custodian (ACC) or Type Commander (TYCOM).

8.4.7.4.2 Requests from an IMA for customer service shall be limited to services not involving repairs within the capability of the requesting IMA. Specifically, these services will be as follows:

a. Engineering and consultation services.

b. Plating, magnaflux, heat treatment, and machinist services.

c. Chemical, physical, and metallurgical laboratory testing.

d. Check and test of equipment and components.

8.4.7.4.3 Assistance required by the IMA may be requested from Depot level activities to complete components delayed in process due to lack of facilities for check and test, or for processing not normally required, for example, heat treatment, plating, magnaflux, and machine shop. Such assistance may be requested by the IMA from the Depot level activity through the use of work request customer service (OPNAV 4790/36A). All other customer service requests originated within by the IMA will be transacted through the Supply Support Center (SSC).

8.4.7.4.4 Materials beyond the repair capability of the IMA, including the manufacture of parts, shall be referred to the SSC for further action. The SSC shall determine the system availability for NMCS or PMCS and work stoppage items prior to submitting requests for Depot level customer service. If it is determined that customer service support is required, SSC shall notify Aircraft Intermediate Maintenance Department/Fleet Readiness Center (AIMD/FRC) to prepare a work order request customer service describing the specific work that must be accomplished. SSC is responsible for transportation of customer service work between the IMA and Depot level activity. It is also SSC's responsibility to accumulate and maintain statistics, such as end item usage and supply data required to ensure continued Fleet support.

8.4.7.4.5 Support equipment requiring extensive repairs or overhaul, including items causing NMCS, PMCS, or work stoppage conditions normally will not be processed by customer service. However, when situations warrant, COMNAVAIRSYSCOM, in coordination with the cognizant functional wing, may authorize customer service for specified items to relieve NMCS, PMCS, or work stoppage conditions.

SECTION 9

Surface Launched Ordnance

Table of Contents

Chapter	Subject	Page
9.1	Introduction	9-1-1
9.2	Rolling Airframe Missile (RAM)	9-2-1
9.3	Conventional Tomahawk Support Activity Site Activation and Inspection Criteria	9-3-1
9.4	Organizational Level Maintenance	9-4-1
9.5	Intermediate Level Maintenance	9-5-1
9.6	Depot Level Maintenance	9-6-1

CHAPTER 9.1

Introduction

Table of Contents

Paragraph	Subject	Page
9.1.1	General	9-1-1
9.1.2	Responsibilities	9-1-1
9.1.3	Applicability	9-1-1
9.1.4	Standard Missile (SM)	9-1-1
9.1.5	Evolved Sea Sparrow Missile (ESSM)	9-1-2
9.1.6	NATO Sea Sparrow Missile (NSSM) (RIM-7)	9-1-8
9.1.7	Rolling Airframe Missile (RAM)	9-1-8
9.1.8	SeaRAM	9-1-9
9.1.9	Tomahawk Land Attack Missile (TLAM)	9-1-10
9.1.10	Harpoon	9-1-10
9.1.11	5-inch Guns	9-1-10
9.1.12	Maintenance Philosophy	9-1-11
9.1.13	Inventory Administration	9-1-11
9.1.14	Asset Readiness Objective	9-1-11
9.1.15	All-Up-Round (AUR) Surface Launched Missile	9-1-11
9.1.16	AUR Maintenance Concept	9-1-11
9.1.17	AUR Test Concept	9-1-11
9.1.18	Deep Stowage Concept	9-1-11
9.1.19	Missile Sentencing Inspection (MSI)	9-1-12
9.1.20	Missile Reissue Inspection (MRI)	9-1-12
9.1.21	AUR Pipeline	9-1-12
9.1.22	Assignment of Maintenance Levels and Responsibilities	9-1-14
9.1.23	Missile Logbooks	9-1-14

List of Illustrations

Figure	Title	Page
9-1-1	AUR Pipeline	9-1-13
9-1-2	Surface Launched Missile Maintenance Levels and Actions	9-1-15

CHAPTER 9.1

Introduction

9.1.1 General. This chapter addresses maintenance program management for surface launched missiles. During a weapon system's deployment life cycle phase, maintenance program management is a critical function due to the impact of maintenance requirements on the effective use of personnel, material, facilities, and fiscal resources. Maintenance program management function includes maintenance planning, coordinating, budgeting, and evaluation program processes. Surface launched missiles are under the cognizance of the Commander, Naval Sea Systems Command (COMNAVSEASYSCOM). Inventory management responsibilities are assigned to the Naval Supply Systems Command Global Logistics Support (NAVSUP GLS AMMO), Mechanicsburg, PA. Throughout this section the term "surface launched missile" will include those designated shipboard missiles capable of being launched from Naval surface combatants.

9.1.2 Responsibilities. Volume I, Chapter 2.2 defines maintenance function and responsibilities that apply to surface launched missiles. Chapters 9.4 through 9.6 describe the Organizational, Intermediate, and Depot level maintenance actions that apply to surface launched missiles.

9.1.3 Applicability. Paragraphs 9.1.4 through 9.1.10 provide surface launched missile system descriptions.

9.1.4 Standard Missile (SM). The SM is the primary surface-to-air weapon for Aegis ships. There are several SM variants, all are launched from the Vertical Launching System (VLS). As part of the highly integrated Aegis Weapon System (AWS), the SM provides a rapid fire air-intercept capability for multiple, high-speed, high-threat engagements. The SM-2 capability continues to evolve to keep pace with an ever-changing threat.

a. SM-2 Block III/IIIA/IIIB Medium Range (MR) Missile.

(1) The SM-2 Block III provides enhanced capability against low-altitude threats when compared to previous variants of SM. These improvements are obtained through modifications to both the guidance and ordnance. The SM-2 Block IIIA provides further improvement to the SM-2 Block III capability in the area of fuzing and ordnance lethality by enabling the warhead to be directionally fired. The SM-2 Block IIIB is similar to the SM-2 Block IIIA, but it incorporates a side-mounted infrared seeker into the proven SM guidance system. This adjunct sensor provides a significant improvement to the missile's terminal engagement performance against stressing anti-ship missile threats. The SM-2 Block IIIB missile has the capability for dual-mode terminal homing. It can start homing on Radio Frequency (RF) energy and then switch to Infrared (IR) homing, if necessary, for a successful intercept.

(2) The current production variant is the SM-2 Block IIIB with the new MK 45 MOD 14 Target Detecting Device (TDD) and Maneuverability Upgrade (MU) enhancements to the Guidance Control Computer (CCG) Software. The MU was developed as a capability-based solution to defeat maneuvering sea-skimming supersonic threats. The MU project consisted of modifying

the software within the autopilot of the missile to increase maneuverability without making structural changes to the missile and required no changes to the VLS or AWS.

b. SM-2 Block IV Extended Range (ER) Missile.

(1) The SM-2 Block IV version was developed to provide extended range, improved cross-range, and higher altitude capability for Aegis VLS ships, as well as improved performance against maneuvering targets and complex Electronic Countermeasures (ECM) environments. Using the SM-2 Block IIIA as the baseline, the BLK-IV design adds a new digital autopilot, a digitally controlled seeker head, a thrust-vector controlled MK 72 booster, and enhanced countermeasure resistance.

(2) As the layered Ballistic Missile Defense (BMD) concept evolved, it was determined that additional terminal phase defense was necessary. The SM-2 BLK-IV extended range missile was modified to perform these endo-atmospheric intercepts, and has been designated SM-Terminal (SM-T). All SM-2 Block IV missiles have been modified for this terminal defense mission, and are restricted to use aboard Aegis BMD ships only.

c. Standard Missile 3 (SM-3).

(1) The SM-3 missile is a solid propellant, four-stage, vertically launched missile that intercepts ballistic missile targets above the atmosphere using a kinetic warhead. The first and second stages of the SM-3 utilize a MK 72 Booster Assembly with Thrust Vector Actuators (TVAs), a MK 104 Dual Thrust Rocket Motor (DTRM), and a second stage Steering Control Section (SCS). Forward of the DTRM is the Staging Assembly (SA), Third Stage Rocket Motor (TSRM), Guidance Section (GS), Kinetic Warhead (KW) and Nosecone. The resulting SM-3 is a weapon capable of engaging threats in the exo-atmosphere with hit-to-kill technology.

(2) SM-3 is deployed and launched from Aegis BMD VLS MK 41 ships only. The All-Up-Round (AUR) and associated Weapon System equipment provide fast reaction long-range exo-atmospheric hit-to-kill Theater Ballistic Missile Defense (TBMD) combat capability for these ships.

d. Standard Missile 6 (SM-6) Extended Range Active Missile (ERAM).

(1) The SM-6 ERAM is a long-range surface-to-air supersonic missile capable of engaging manned or unmanned fixed or rotary-wing aircraft and land attack or Anti-Ship Cruise Missiles (ASCM) in flight. The SM-6 ERAM will operate with SM-2 Block IV capable ships using the kinematics and engageablity of the SM-2 Block IV missile, but will take advantage of the SM-6 ERAM active radar seeker. Follow-on updates to AWS will include new kinematics and engageablity contours to utilize the full intercept performance of the SM-6 ERAM missile.

(2) Aegis functionality will mature over time to fully utilize SM-6 ERAM capabilities. In FY 2010, Aegis ships will identify and support the SM-6 ERAM as a SM-2 Block IV. During FY 2012-2014, Aegis Modernization ships will phase in the full Over-the-Horizon (OTH) SM-6 ERAM Naval Integrated Fire Control-Counter Air (NIFC-CA) capabilities.

9.1.5 Evolved Sea Sparrow Missile (ESSM). The ESSM is designed for shipboard storage and functioning in the operating states/methods as described below whether employed in a surface-to surface or surface-to-air engagement and whether launched from trainable or VLS.

9.1.5.1 Missile Phases. The seven missile phases are described in the following paragraphs.

a. Ready Storage:

(1) The ESSM can be stored within the various NATO Sea Sparrow Missile (NSSM) system launching systems (MK 29 Guided Missile Launching System (GMLS), MK 41 VLS and MK 48 Guided Missile Vertical Launching System (GMVLS), and the MK 56 GMVLS). Shipboard storage specifically applies to all in-launcher ESSMs whether in a usable or unusable condition. The ESSM is capable of in-launcher storage without power and ready for immediate and remote transitioning from in-launcher storage to operating condition, upon receipt of the irreversible intent to launch signal. Transition from a storage condition to the operating state/condition ready for launching represents the "Quick Start" capability for the ESSM; previous Sea Sparrow missiles required a pre-launch phase that included a warm-up mode.

(2) During the ready/storage phase the software is commanded to perform tune and Built-in-Test (BIT). The Transition Section Computer (TSC) receives these commands via the MIL-STD-1553B launcher interface. Tune commands are passed from the TSC through the Missile-Borne Computer (MBC) and received by the Rear Receiver (RR), where tuning is initiated. BIT commands are passed to the TSC, MBC, and RR Computer Software Configuration Items (CSCIs). Individual BIT results are collected by the TSC, and final combined results are sent back to the launcher system. The ESSM is also capable of being automatically and immediately secured and safely stored (i.e., the launcher power is removed and the Laser Arm and Fire Device (LAFD) returns to safe) in a deactivated or dud condition following any readiness or launch failure (i.e., BIT failure).

b. Launch:

(1) The ESSM includes a launch period that begins when the missile commitment, Intent to Launch (ITL), is commanded via the MIL-STD-1553B interface and ends with rocket motor ignition and first missile motion. The TSC receives the ITL command and initiates BIT prior to launch. Initialization commands, such as target position and velocity, Inertial Referencing Unit (IRU) initialization data, and rear reference frequency, are received from the launcher. Rear reference frequency is passed from the TSC through the MBC to the RR. BIT results are sent back to the launcher system via the MIL-STD-1553B interface. The TSC waits for first missile motion indication. During this period, the arm fire device for the rocket motor is armed, missile battery squibs are activated, gyro run-up occurs, external power is removed, pre-launch messages are sent and the rocket motor fire command is transmitted. The entire launch period, from missile commit to launch until missile first motion, does not exceed 2.0 seconds. If a missile "ready" indication is not received, then the rocket motor fire command is not provided and the missile is dudded and the LAFD is returned to safe.

c. Transition:

(1) The ESSM includes a transition period that begins at missile first motion and concludes upon activation of the RR. During the transition phase, the TSC guides the missile to clear the ship, gain speed for the control surfaces to be effective, and puts it onto an initial intercept course for the target. ESSMs launched from vertical launchers are thrust vector controlled to accomplish missile clearance of the ship, pitch over and flight path alignment. Flight path during this period is programmed prior to launch and updated by pre-launch messages.

d. Midcourse:

(1) The ESSM includes a midcourse period that begins upon activation of the rear receiver and continues until the missile switches to terminal homing. Basic guidance (inertial guidance) is provided within the missile for flight to a predetermined initial point as determined by the Fire Control System (FCS) and supplied to the ESSM as a pre-launch message. The ESSM utilizes a new Inertial Measurement Unit (IMU) to provide this improved inertial guidance using curvature guidance. This basic guidance is further redefined (updated) by operating in conjunction with the other midcourse guidance methods. The ESSM is capable of providing the following midcourse guidance alternatives:

(a) Inertial only guidance allows for ESSM guiding solely with the basic inertial guidance until reaching the pre-launch estimated point of intercept. Inertial only permits delaying implementation of other guidance methods (such as Continuous Wave Illumination (CWI)) and provides back-up guidance during periods of alternate guidance interruptions.

(b) The updated midcourse guidance method supplements the basic inertial guidance by providing timely up-linked information via X-Band or S-Band (Aegis only) RF transmissions. The information consists of all requisite data to update the estimated point of intercept for inertial guidance. The ship may up-link a start search message or, alternately, allows the missile to decide when to start search based on Time-To-Go (TGO).

e. Acquisition and Homing:

(1) During the acquisition and homing phase, the TSC commands the MBC to begin searching for the target. When acquired, line-of-sight angle rates are passed from the MBC to the TSC, and homing guidance is initiated. Homing guidance may be driven by either CWI or Sample Data Homing (SDH), used in Interrupted Continuous Wave Illumination (ICWI). In the case where SDH is used, the RR notes the arrival of the illumination pulse, thus validating the line-of-sight rates.

(2) During the homing phase, the TSC continues to guide the missile toward the intercept point. At this time critical information is calculated and sent to the TDD from the TSC to the MBC in order to arm the fuze.

f. Terminal:

(1) During the terminal phase, the TSC continues to guide the missile toward the intercept point. At the appropriate point a TDD enable signal will be from the TSC to the MBC. The TSC adds certain corrections to guidance for special cases such as Low Altitude Guidance (LAG).

g. Intercept:

(1) At intercept, the TDD detects the target and sends a fire pulse to the warhead.

9.1.5.2 Home on Jam/Helicopter. The ESSM is capable of Homing on Jamming (HOJ) sources and Homing on Helicopters (HOH). HOJ passively tracks target radiation and is generally a backup mode of a normally semi-active or active seeker. Typically, HOJ operation begins when a missile recognizes that a jammer is overcoming its tracking logic. At recognition, HOJ starts angle tracking of the target emissions. In sophisticated HOJ operations, the seeker can alternate between normal and HOJ tracking.

9.1.5.3 Missile Command-Destruct/Self-Destruct (CD/SD). Tactically configured rounds are fitted with a CD capability. The baseline ESSM is capable of warhead destruction regardless of the CD implementation method (i.e., through an up-link message or by a digital Pre-launch message and subsequent missile in flight illuminator shut down).

a. CD occurs within 0.010 seconds of receipt of the CD signal from either X-Band or S-band up-links. CD is enabled receiving a valid CD code via the initialization message. The logic for determining the validity of the CD code is contained within the X-Band Receiver and the S-Band Module, and is not a function of the CD/SD module.

(1) Command Destruct
Initiated by X-Band or S-Band up-link command
Up-linked command must match code set at initialization

(2) Self Destruct
Loss of battery power
Loss of rear reference/up-link
May be disabled by Quiet Mode

9.1.5.4 Component List and Description.

a. Guidance Section Description. The GS is a modification to the GS in the current Sea Sparrow RIM-7P. These modifications provide specific upgrades to improve performance in order to meet threat driven operational requirements. The GS provides target location information, X-Band up-link interface, signal conditioning, acquisition/tracking, and radar fuzing. Digital autopilot, navigation, and guidance functions have been moved to the TSC. A new digital bus has been incorporated between the GS and the Transition Section (TS) to accommodate the data transfer requirements of the relocated functions. GS modifications are also designed to provide quick start capability and improved sensitivity with minimal changes to the existing RIM-7P design. ESSM provides three guidance modes:

(1) Home All the Way (HAW) with CWI support from launch to intercept;

(2) Midcourse Guidance (MCG) mode in which MCG is internal with X-Band update support, followed by terminal semi-active homing with either continuous or interrupted illumination; and

(3) MCG supported by S-Band up-link, followed by a Continuous Wave (CW) semi-active terminal phase.

b. These modes, combined with an IMU, enable multiple simultaneous engagements, improve intercept velocity and maneuverability via optimal trajectory shaping, and improve engagement geometry to minimize RF interference for low altitude intercepts. The MCG mode choice is based on the launch platform's fire control system.

c. ESSM is designed to work with the Active Phased Array Radar (APAR) Cluster IV configuration. The MCG uses target position and velocity data up-linked by APAR. Algorithms with missile TSC are solved to shape the trajectory and direct the missile to the predicted intercept point. Occasional updates keep target data current so that the trajectory is responsive to target maneuvers or to a new target assignment. Onboard logic triggers search and handover

to SDH, CW, Pulse Doppler (PD), ICWI, or Interrupted Pulse Doppler (IPD). Kalman filters used in terminal guidance provide a convenient means for adopting homing to the lower sampling rate.

9.1.5.5 Warhead Description.

a. The MK 144 MOD 0 Warhead Section is composed of the MK 139 MOD 0 Warhead that was developed by Thomson DASA Wirksysteme of Schrobenhausen, Germany, the MK 88 Safety Arming Device (SAD), and the MK 38 MOD 2 Booster. Dimensionally, the warhead matches all mechanical interface requirements of the present WAU-17B Sea Sparrow Warhead, but has different electrical interfaces.

b. The MK 139 warhead is composed of stainless steel housing with approximately 1,900 stainless steel fragments bonded to the outside. The fragment layer is over-wrapped by epoxy-filled fiberglass cloth, thus providing a sealed smooth surface for the exterior of the warhead. The housing is loaded with approximately 15 kg of SS-H-8231 (commercial name KS33) plastic bonded explosive, which is similar to PBXN-110.

c. The MK 88 SAD is a variant of the Sidewinder AIM-9X Electronic Safe and Arm Device (ESAD) but includes a Fuze Trigger Device (FTD) within the body of the SAD. The MK 88 SAD is identical to the MK 33 SAD in form, fit, and function with the addition of the FTD. The MK 88 SAD includes a Low Energy Exploding Foil Initiator (LEEFI) containing 50 mg of HNS-IV for an input charge and 50 mg of PBXN-5 for an output charge, and a MK 9 lead charge containing 368 mg of CH-6, which initiates the MK 38 Booster.

d. The MK 8 MOD 2 Booster contains approximately 44 grams of CH-6 explosive, which provides explosive transfer from the MK 88 SAD to the MK 139 warhead. The MK 38 MOD 2 is also used in the current WAU-17 A/B Sea Sparrow warhead section.

9.1.5.6 Transition Section Description.

a. The TS provides the primary communication paths between the launcher and the other sections of the weapon. The TSC is the “master” computer for the ESSM. All flight phases and master frame timing are driven from this CSCI by the executive Computer Software Component (CSC). Launcher data from the MIL-STD-1553B bus is received by the input/output CSC within this CSCI and are distributed appropriately. Using the data bus, the TS acts as the master controller for System BIT, and reports status back to the launcher. The TS includes an IMU and the appropriate software to implement an inertial reference-based Digital Auto Pilot (DAP) design. The TS also makes provisions for the installation of a U.S. only S-Band Data Link Transceiver. Outputs are routed to the dual frequency S-Band Antenna. The TS includes a power converter which accepts launcher supplied 115 VAC, external test power, and/or thermal battery voltages from the Control Actuation Assembly (CAA) and distributes various supply voltages to units within the TS, and to the GS. The optional Warhead Compatible Telemeter (WCT) is also located in the TS.

9.1.5.7 Rocket Motor Description.

a. The ESSM Rocket Motor is a dual propellant single thrust rocket motor with a 10-inch diameter and a maximum length of 78.85 inches. The nominal weight is 370.6 pounds of which 263 pounds are propellant. The chamber is made of D6ac steel heat treated to 220,000 psi

minimum tensile strength. The case has a wall thickness of 0.081 inches and a 4,000 psi burst pressure. Ethylene Propylene Diene Monomer (EPDM) M-Class rubber is the case insulation material. It consists of a cylindrical section with an integral forward dome, axial fin clips for attachment of the dorsal fins, and a separate aft closure/blast tube and exit cone. The aft closure/blast tube is attached to the case by a retainer ring that screws into the case. The two propellant grains are cast in a concentric manner with a circular bore and two stress relief slots. The outer grain is an aluminized Hydroxyl-Terminated Polyether (HTPE) propellant; the inner grain is a reduced smoke HTPE. A LAFD is the means of arming and ignition. The LAFD consists of a laser diode which, when pulsed, laces through a fiber optic path to a small BKNO3 charge which transfers to the larger BKNO3 pellet charge present in an igniter tube. The laser is prevented from pulsing inadvertently by a series of solid-state switches that are energized by arming current. When a firing pulse is sent, a second group of switches close, providing current to the laser diode. ESSM is the first use of an LAFD within the U.S. Navy.

9.1.5.8 Control Actuation and Thrust Vector Control Sections.

a. The primary function of the Control Actuation Section is to provide pitch, roll, and yaw control during all phases of missile flight. The Control Section is comprised of three major assemblies: the CAA, Aerodynamic Control Fins (ACF), and the Thrust Vector Controller (TVC) used in vertical launch configurations. When launched from a MK 29 GMLS, the aerodynamic forces generated by the ACFs provide the sole missile control. Each of the four ACFs is independently positioned by the CAA. When launched from a VLS, the missile must first perform a pitch-over maneuver to the desired missile flight path. During the pitch-over maneuver phase, forces generated by the interaction between the TVC jet vanes and rocket motor exhaust accomplish missile control. Each of the four jet vanes is slaved to its respective ACF. Consequently, the CAA independently positions each jet vane. Upon completion of the pitch-over maneuver, the TVC is jettisoned by firing an explosive bolt and releasing the marmon clamp that attaches the TVC to the CAA.

b. The Control Section houses the missile umbilical connector, which provides the electrical interface to each of the launchers. Missile restraint in the MK 41 VLS is provided through the TVC by attachment to the exhaust obturation system. The TVC has encan/decan features for loading and unloading the missile as well as anti-rotation features for the MK 25 canister. The ACFs are folded in the MK 29 GMLS and MK 48 GMVLS and deploy upon launch.

c. During the pre-launch phase, the CAA electronics provide battery squib firing pulses for the 28V battery, both 140V batteries, and the 28V guidance section battery. The 28V and 140V batteries are located within the CAA. The CAA contains a G switch and a timer as safety features. Marmon clamp explosive bolt activation can only occur when the G switch signal, timer signal, and pitch over complete signal from the TS are all present. The CAA contains four independently controlled electromechanical actuators, power take-off shafts, drive and sequencer electronics, batteries, and cable harnessing. The actuators are pulse width modulated linear position servomechanisms employing a potentiometer on the output shaft for position feedback. A connector located at the back of the CAA mates with the TVC providing the firing pulse to the marmon clamp explosive bolt as well as the TVC present/not present signal.

d. The TVC is driven by the CAA actuators and contains four independently positioned jet vanes connected to power take-off shafts via a gear train. The TVC and CAA power takeoffs

are connected using simple cardan-type mechanical couplings that compensate for misalignment between the power take-off shafts. The TVC also contains cable harnessing for the marmon clamp explosive bolt.

9.1.5.9 ESSM Software Description.

a. DOD-STD-1679 defines the design, documentation, and test requirements that governed the original Sea Sparrow RIM-7P software development and shall define the design, documentation and test requirements that shall govern software modifications for the ESSM, MBC and RR processors. DOD-STD-2167 and DOD-STD-2168 define the design, documentation, and test requirements that govern the software development for the TSC and S-Band Link (SBL) processors. Thales (formerly Signal), The Netherlands is developing the TSC software under the guidelines of STANAG 4404.

b. The missile software is developed under three Software Development Plans (SDPs) and, where applicable, ADA coding guidelines are established according to the Raytheon Missile Systems (RMS) Software Engineering Practices and Procedures (SEPP) and the RMS Software Engineering Guidelines (SEG). The SDPs provide detailed information on the process to be followed during the life cycle of the ESSM software.

c. The ESSM Missile System consists of four CSCIs. These CSCIs consist of the TSC, RR, MBC and SBL. A comprehensive BIT is implemented that runs during the ready/storage phase and again at missile power-up prior to launch. BIT interrogates hardware, such as the computer resources, control actuation section, IMU, WCT, and S-band hardware, and then combines those results with data from the MBC and RR. This data is then reported via the MIL-STD-1553B bus to the launcher system.

9.1.6 NATO Sea Sparrow Missile (NSSM) (RIM-7). The Sparrow is a medium-range, all-weather, supersonic, surface-to-air guided missile. The RIM-7M guidance and control, when used in the surface launched RIM-7 configuration, has folding wings, clipped fins, and a remotely armable rocket motor are used. The RIM-7M utilizes a MBC, an active fuze system, motorized seeker head tracking, and improved maintainability and produceability. The RIM-7P missile has undergone two block modifications. The RIM-7P Block I provides low altitude guidance and fuzing capability. The RIM-7P Block II provides increased memory and throughput to the MBC, enhanced production software reprogrammable capability, and mid-course uplink improvements to the rear receiver. The RIM-7 series is a semi-active, surface-to-air, boost-glide missile, designed to be either rail or ejection launched. Semi-active, CW, homing radar, and hydraulically-operated control surfaces direct and stabilize the missile on a proportional navigational course to the target. Propulsion for the missile is provided by a solid propellant rocket motor. Sparrow is capable of being launched by all U.S. ship defense systems used against enemy aircraft and cruise missiles when employed as a Basic Point Defense Surface Missile System. Missile-to-ship electrical and mechanical interface is provided by the launchers listed as follows for the applicable MK/MOD launchers: It is utilized in the MK 29 GMLS trainable configuration by the U.S. Navy and in both the MK 29 and MK 48 GMLS configurations by North Atlantic Treaty Organization (NATO) and other Foreign Military Sales (FMS) customers.

9.1.7 Rolling Airframe Missile (RAM). The RIM-116 RAM is a surface launched, lightweight quick-reaction, fire and forget missile designed to destroy anti-ship missiles and asymmetric air

and surface threats. Currently there are two RIM-116 configurations: Block 0 (RIM-116A) and Block 1 (RIM-116B). The Block 0 design is based on the infrared seeker of the Stinger missile, and the warhead, rocket motor, and fuze from the Sidewinder (AIM-9M) missile. The Block 0 configuration uses RF for midcourse guidance and transitions to IR guidance for terminal engagement. There is no shipboard support required (i.e., no illuminators) after missile launch. While retaining Block 0 guidance modes, Block 1 incorporates the added capability of autonomous IR-all-the-way guidance, thus countering advanced anti-ship missiles that do not employ onboard radar seekers. The missile's inherent seeker design and performance characteristics enable engagement of helicopters, aircraft and surface threats.

9.1.8 SeaRAM. Missile Defense System provides the highest level of ship self-protection with extended keep-out range capability and the ability to engage multiple targets. The SeaRAM Anti-ship Missile Defense System is an evolved MK 15 Close-In Weapon System (CIWS) comprising key attributes of both the Phalanx CIWS and the RAM Guided Weapon System. The MK 15 MOD 31 SeaRAM extends the inner layer battle space and enables the ship to effectively engage future high-performance, supersonic, and subsonic threats at greater distances. The system provides the highest level of ship self-protection with extended keep-out range capability and the ability to engage multiple targets. These important features strengthen the ship's ability to sustain its mission in the most challenging littoral environments.

a. Technology from the MK 15 Phalanx CIWS and RAM integrates elements of each system into the self-contained SeaRAM system. An 11-missile round RAM launcher assembly, loaded with RAM guided missiles, replaces Phalanx's 20mm gun. SeaRAM combines RAM's superior accuracy, extended range and high maneuverability with the Phalanx Block 1B's high resolution search-and-track sensor systems and reliable, quick-response capability.

b. SeaRAM is an affordable capability upgrade–an especially attractive option for those navies that have already deployed the Phalanx CIWS. SeaRAM fits the exact shipboard installation footprint of the Phalanx, uses the same power and requires minimal shipboard modification. SeaRAM is well suited to new construction and requires minimal system integration because of its self-contained features. The integration risk is minimized because RAM and Phalanx are already being deployed as a part of the U.S. Navy's integrated Ship Self-Defense System.

c. The SeaRAM system is a complete and autonomous weapons system with its own sensor suite, combat system and weapon. Like the Phalanx, only power and cooling water are required from the ship. Evolved from the Phalanx Block 1B system, SeaRAM includes the latest version Ku-band search and track radar and a new Forward Looking Infrared (FLIR) imaging system. SeaRAM's sensor suite provides multi-spectrum search and targeting capabilities for daytime and nighttime operations. Below decks, the SeaRAM system uses the same control panel and consoles that are deployed as part of Phalanx 1B upgrade; thus, no changes in equipment space or footprint are required. The local and remote consoles provide the operator with video images from the FLIR for threat detection and track.

d. The operator can establish positive identification of precisely where or what the system is tracking. Each console contains a display, keyboard and joystick handle. For low-velocity threats the operator is able to move the mount, designate and engage the target. The local control station houses the unique SeaRAM electronics and provides an interface to the SeaRAM. The local control station also provides the necessary Fiber Distributed Data Interface (FDDI),

Naval Tactical Data System (NTDS) or 1553 interface to the ship's combat system, should it be required or desired.

9.1.9 Tomahawk Land Attack Missile (TLAM). The TLAM is an all-weather, long range, subsonic cruise missile used for land attack warfare, launched from U.S. Navy surface ships and U.S. Navy and Royal Navy submarines.

a. Tomahawk carries a nuclear or conventional payload. The conventional, land-attack, unitary variant carries a 1,000-pound-class warhead (TLAM-C) while the sub munitions dispenser variant carries 166 combined-effects bomblets (TLAM-D). The Block III version incorporates engine improvements, an insensitive extended range warhead, time-of-arrival control and navigation capability using an improved Digital Scene Matching Area Correlator (DSMAC) and Global Positioning System (GPS) which can significantly reduce mission-planning time and increase navigation and terminal accuracy. Tomahawk Block IV (TLAM-E) is the latest improvement to the Tomahawk missile family. Block IV capability enhancements include:

(1) Increased flexibility utilizing two-way satellite communications to reprogram the missile in-flight to a new aim-point or new preplanned mission, send a new mission to the missile en route to a new target, and missile health and status messages during the flight.

(2) Increased responsiveness with faster launch timelines, mission planning capability aboard the launch platform, loiter capability in the area of emerging targets, the ability to provide battle damage indication in the target area, and the capability to provide a single-frame image of the target or other areas of interest along the missile flight path.

(3) Improved affordability with a production cost of a Block IV significantly lower than the cost of a new Block III and a 15-year Block IV recertification interval compared to the eight-year interval for Block III.

b. Tomahawk cruise missiles are designed to fly at extremely low altitudes at high subsonic speeds, and are piloted over an evasive route by several mission tailored guidance systems. The first operational use was in Operation Desert Storm, 1991, with immense success. The missile has since been used successfully in several other conflicts.

9.1.10 Harpoon. The Harpoon is an all-weather, anti-ship, subsonic, surface attack guided missile that can be delivered from a surface vessel (RGM-84), or submarine (UGM-84). The various launch configurations are obtained with the installation of the applicable launch kits, booster section, canister, or capsule. All configurations are capable of over-the horizon launch ranges and have built-in self test capability. Harpoon employs a low-level cruise profile, active radar guidance with counter-countermeasures, and terminal maneuvering to assure maximum weapon effectiveness. It consists of four major sections: guidance, warhead, sustainer, and control sections. A booster section is added to the aft end of the missile for surface and subsurface launches. The warhead section is replaced with an exercise section for evaluation and training exercises. An appropriately configured Harpoon can be launched from a MK 13 MOD 4 (TARTAR) or MK 141 MOD 1 (Canister) launcher; or from a submarine torpedo tube.

9.1.11 5-inch Guns (MK 45 54-Cal Lightweight Gun). The 54-cal (MK 45) lightweight gun provides surface combatants accurate naval gunfire against fast, highly maneuverable surface targets, air threats and shore targets during amphibious operations. The MK 45 is deployed on

the Arleigh Burke-class destroyer guided missile destroyer and the Ticonderoga-class guided missile cruiser. This lightweight gun system offers significant improvements in reliability and maintainability over the 54-cal MK 42 gun systems. The MK 45 is controlled by either the MK 86 Gun Fire Control System or the MK 160 Gun Computing System.

9.1.12 Maintenance Philosophy. The surface launched missile maintenance philosophy is based on the AUR maintenance concept and utilizes the three tiered maintenance structure described in Volume I, Chapter 1.3 of this manual. Maintenance processes are designed to achieve the specific surface launched missile system's assets readiness objective as established by the Chief of Naval Operations (CNO). The objective of the processes is to achieve and maintain established asset readiness objective with optimal use of manpower, material, and fiscal resources.

9.1.13 Inventory Administration. NAVSUP P-724 provides administrative procedures for inventory reporting.

9.1.14 Asset Readiness Objective. The CNO establishes an asset readiness objective for each surface launched missile system based on the Non-Nuclear Ordnance Requirements (NNOR) model, developed in accordance with OPNAVINST 8011.9A. The asset readiness objective, Fleet operational requirements and ship fill requirements are the goal to be achieved and maintained by the Naval Ordnance Management Policy (NOMP). Asset readiness is expressed as the ratio (in percentage) of serviceable assets in the inventory. The CNO monitors asset readiness, and mission readiness as described in Volume I, Paragraphs 2.1.4 and 2.1.5 for each individual system.

9.1.15 All-Up-Round (AUR) Surface Launched Missile. An AUR surface launched missile is provided to the Fleet as a complete assembly in its end item configuration.

9.1.16 AUR Maintenance Concept. The AUR missile maintenance concept is a maintenance methodology designed to accommodate the processing of AUR surface launched missiles throughout the logistics life cycle. The objectives of the AUR maintenance concept are:

a. To issue fully assembled missiles to the Fleet which require minimal checkout.

b. To affect improvements in surface launched missile handling and storage throughout the logistics sequence.

c. To affect major decreases in weapon loading and downloading operational times.

9.1.17 AUR Test Concept. The AUR missile test concept is a maintenance methodology designed to assess specific operational parameters of the AUR missiles as the final maintenance action, performed in the configuration, which will be forwarded to the user. The AUR test is intended to verify compliance with test specification parameters and provide an acceptable degree of assurance that only weapons with high probability of success are issued to the operating forces.

9.1.18 Deep Stowage Concept. Deep stowage is a means of protecting the AUR missile. The objective of deep stowage is to maintain assets in their highest state of readiness until needed to support operational requirements. Deep stowage describes assets when they are stored in a protected environment. Assets stored under such conditions normally remain in their shipping

containers with Weapon Station or NMC Detachment seals intact. Deep stowage assets are protected from degradation caused by day-to-day exposure to the environment, thereby providing the highest confidence level that the AUR will accomplish the mission. In order to meet the highest confidence level, a missile must meet the following criteria:

a. Deep stowed in an undamaged container with one or more traceable seals intact.

b. No restrictions Notice of Ammunition Reclassification (NAR) on use of missiles or components.

c. Missile is within serviceable period.

d. Serial number on Code "A", material condition tag/label matches the serial number on the container.

9.1.18.1 Deep Stowage (Afloat). Assets are classified as deep stowage for as long as they remain in their shipping containers and are stored in a protected environment in magazines, which are in accordance with NAVSEA OP 4.

9.1.18.2 Deep Stowage (Ashore). Assets are classified as deep stowage for as long as they remain in their shipping containers and are stored in a protected environment in magazines, which are in accordance with NAVSEA OP 5.

9.1.19 Missile Sentencing Inspection (MSI). This inspection is a visual external examination (screening) of the shipping container when a transfer of assets is accomplished. An MSI can be performed in operating buildings, segregation facilities, waterfront piers, or in any approved inspection area permitted by NAVSEA OP 5. MSI procedures have been developed for each individual missile series and are contained in NAVSUP P-805/807.

9.1.20 Missile Reissue Inspection (MRI). The MRI is designed to take maximum advantage of surface launched missile Re-certification Due Dates (RDD, RAM only). The RDD is the date a surface launched missile or component must be returned to the Depot for testing. The RDD is established by adding Serviceable In-Service Time (SIST) to the latest test date, but may not exceed the date that an internal component's service life will expire. The SIST is that period of time a surface launched missile may remain in operational use and/or storage before its internal electronic or mechanical components require a test or maintenance action to validate suitability for operational use. The SIST clock starts with the Date of the Last Test (DOLT) performed by an authorized activity. Service life is the period of time a missile explosive component may remain in operational use and/or storage. The service life starts with the date of manufacture. Missiles failing the MRI are returned for required repair actions before reissue.

NOTE

Most reporting systems allow for only a month/year field for the RDD. The RDD will expire on the last day of the month, after the DOLT plus SIST is calculated.

9.1.21 AUR Pipeline. Figure 9-1-1 is a simplified block diagram that depicts the flow of AUR missile from acquisition through final expenditure. A brief discussion of the pipeline follows:

a. Upon COMNAVSEASYSCOM acquisition of the AUR surface launched missiles, they are shipped directly from the vendor to a storage point where they are entered into the Navy supply system, tracked through the Ordnance Information System (OIS) and issued to the Fleet.

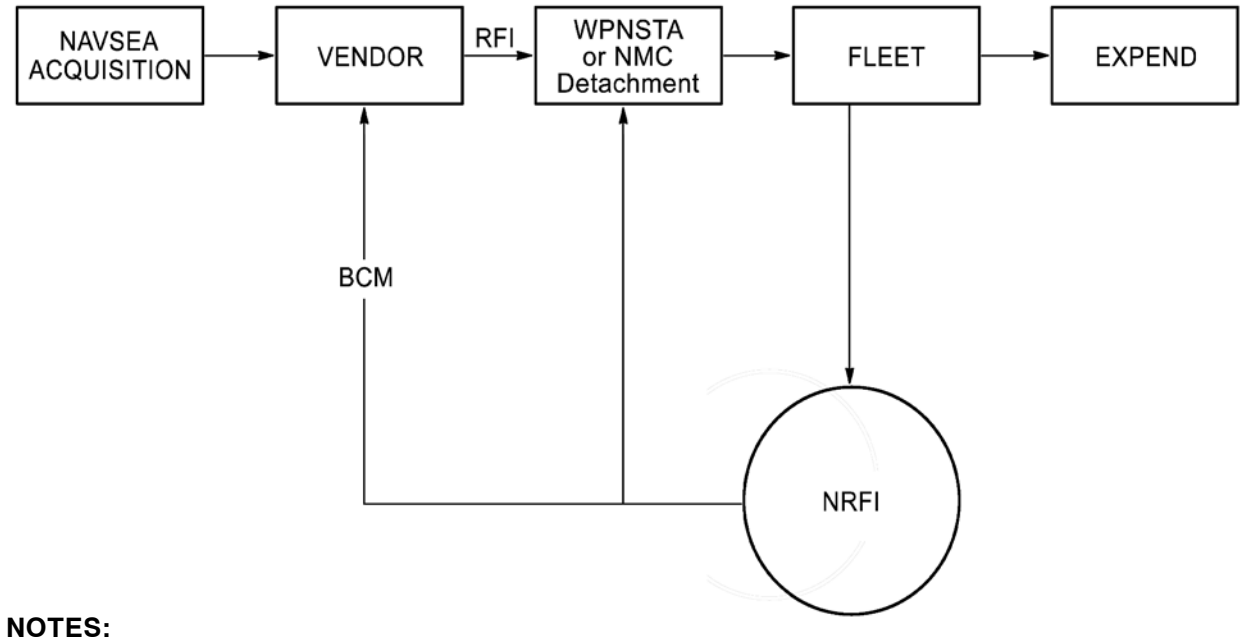

NOTES:

AUR	All-Up-Round
BCM	Beyond Capable Maintenance
NMC	Navy Munitions Command
NRFI	Non Ready-for-Issue
RFI	Ready-for-Issue
WPNSTA	Weapons Station

Figure 9-1-1. AUR Pipeline

b. AUR missiles issued to the Fleet remain under Fleet Commander cognizance until expenditure, RDD is due, SIST expires, service life expires, or malfunction occurs. With the exception of those AUR missiles normally remaining containerized and are placed in deep stowage. Through the use of MSI, missiles meeting ready for issue criteria will remain available for redeployment or shipped to storage awaiting issue.

c. When a Fleet-issued AUR missile becomes non ready-for-issue because the RDD is expended, service life expires, or malfunction occurs, it is returned to the appropriate maintenance facility for repair or re-certification. Missiles that are Organizational or Depot level maintenance are shipped directly to the respective depot. All missile transactions and status changes are reported and tracked through the OIS system.

d. AUR missiles returned to a maintenance facility are inspected, tested, and repaired in accordance with the applicable approved procedures. Repaired and re-certified AUR missiles are again ready for Fleet issue. Contractor repaired AUR missiles are shipped directly from the vendor back to a storage point where they are again ready for Fleet issue. AUR missiles and components continue to be tracked in OIS wholesale throughout the process. Any changes in their configuration or status are reported via transaction item reporting and ammunitions transaction reports.

9.1.22 Assignment of Maintenance Levels and Responsibilities. Figure 9-1-2 provides an overview of Surface Launched Missile Maintenance Levels and Actions to which they are normally assigned. Maintenance action, peculiar record keeping and reporting requirements are inherently included in these assignments. Selected higher-level maintenance actions may be performed at designated lower level maintenance levels when authorized.

9.1.23 Missile Logbooks. Logbooks and records are an integral part of surface launched missile maintenance. Logbooks accompany each surface launched missile and are the administrative means of providing managers with surface launched missile age, status, operational history, movement, modification, configuration, transfer, and receipt accounting data. Properly maintained logbooks document each individual surface launched missile's operational history, movement, modification and maintenance actions throughout its lifecycle. Surface launched missile logbooks serve as the baseline document for this purpose. The Serialized Lot Item Tracking System (SLITS) subsystem of the NAVSUP GLS AMMO OIS requires MK, MOD, nomenclature, part number, serial number, National Stock Number, and Naval Ammunition Logistics Code where applicable, for inventory control. Specific guidelines on the proper logging procedures are included in the surface launched missile logbook. Missile logbook entries, or data for subsequent entry into the logbooks, are required at each level of maintenance see Figure 9-2-3 for a sample RAM logbook. Missile logbook entries are required when:

a. Modification of the missile has been accomplished.

b. Technical Directives (TDs) have been incorporated.

c. Maintenance has been performed.

d. An age-limited component has been replaced.

ORGANIZATIONAL	INTERMEDIATE	DEPOT
Inspect container.	Inspect missile.	Inspect AUR.
Service desiccant.	Inspect container.	Inspect container.
Comply with NARs and TDs.	Service desiccant.	Service desiccant.
Load and download missile from launcher.	Comply with NARs and TDs.	Comply with NARs and TDs.
	Minor maintenance/repairs.	Minor maintenance/repairs.
	Clean missile and external parts as required. Perform paint touch-up and corrosion control.	Clean missile and external parts as required. Perform paint touch-up and corrosion control.
	Repackage missile container.	Repackage missile container.
	Container repair.	Container repair.
		Remove and replace section; replace internal and external component only.
		Inspect, test, replace rocket motor.
		Inspect, repair, modify warhead, safe and arm device, and electronic firing switch.
		Inspect, test, repair, rework, modify, and replace fuze and TDD.
		Inspect, repair, modify, and replace wings and fins.
		Inspect, test, repair, rework, modify and replace launch canister/containers.
		Inspect, test, repair, rework, and modify guidance and control section or guidance and control group to assembly, subassembly, or component level. Reassemble and perform final system test.
		AUR and section testing.

Figure 9-1-2. Surface Launched Missile Maintenance Levels and Actions

e. Extension of the AUR RDD. Many times the logbook cannot be readily accessed when the AUR RDD on the container is updated. Therefore, the RDD marked on the container takes precedence over the logbook. It is not necessary to un-palletize a unit pack to mark the new RDD on all sides of the container when a RDD is changed, extended or re-established. The latest RDD marking on a container will be used provided that it matches the markings on the material condition tag/label. The logbook should be changed to reflect the more current RDD on the container at the first available opportunity that does not create additional workload to remove logbook.

NOTE

MDD for RAM is RDD (Recertification Due Date).

f. The missile is expended.

9.1.23.1 The Naval Surface Warfare Center (NSWC), Corona, CA has been designated as the repository for all surface launched missile logbook information. Permanent files are periodically updated by maintenance data system input and are kept on each missile. Upon expenditure of the surface launched missile, the logbook is sent to NSWC, Corona, CA in accordance with logbook instructions. Activities that receive incomplete or missing surface missile logbooks and records should contact the NSWC, Corona, CA for current copy of the logbook. Missing missile logbooks can be obtained by downloading them directly from a website by personnel with approved access for their type/model/series missile.

9.1.23.2 The missile logbooks are electronically generated at the AUR manufacture and consists of a combined missile Configuration Summary Form (CSF) and missile log sheet, a logbook cover and any applicable safety tags. Anytime a missile is subjected to a Missile Re-issue Inspection, the logbook is updated in accordance with each system requirements. This will allow for collection of Fleet maintenance data, inspection findings, installation locations, etc.

CHAPTER 9.2

Rolling Airframe Missile (RAM)

Table of Contents

Paragraph	Subject	Page
9.2.1	Overview	9-2-1
9.2.2	Description	9-2-1

List of Illustrations

Figure	Title	Page
9-2-1	Missile Model Matrix	9-2-2
9-2-2	Assigned Level of Maintenance for RAM	9-2-2
9-2-3	RAM Logbook Sample	9-2-3

CHAPTER 9.2

Rolling Airframe Missile (RAM)

9.2.1 Overview. The RAM MK 31 Guided Missile Weapon System (GMWS) Program is an Acquisition Category (ACAT) II international cooperative program between the U.S. and Germany. The MK 31 GMWS is a lightweight, fast reaction, high-firepower missile system designed to engage and destroy incoming Anti-Ship Missiles (ASMs). It is a self-defense weapon system and provides primary or complementary Anti-Air Warfare (AAW) self-defense. The MK 31 GMWS mission typically involves engaging and destroying an inbound high-speed target for which very little advance warning is available. The MK 31 GMWS is part of the self defense system aboard U.S. and German Navy ships. The MK 31 GMWS MOD 1 and the MK 31 GMWS MOD 3 consist of a 21-cell MK 49 Guided Missile Launching System (GMLS) and up to 21 Guided Missile Round Packs (GMRPs) (MK 44 (Tactical) GMRPs and/or MK 47 (Telemetry) GMRPs). Figure 9-2-1 provides a missile model matrix, Figure 9-2-2 assigns maintenance responsibilities for RAM, and Figure 9-2-3 shows a sample RAM logbook.

9.2.2 Description. The GMRP MK 44 and MK 47 are part of the RAM GMWS MK 31. The MK 44 GMRP consists of a RAM RIM-116 (Tactical) Missile and Launching Canister. The MK 47 GMRP consists of a RAM RTM-116 (Telemetry) Missile and Launching Canister.

a. The RAM MK 44 MOD 0/1 GMRPs are 5-inch-diameter surface-to-air missiles with passive, dual-mode Radio Frequency/Infrared (RF/IR) guidance and both an active proximity and contact fuze. The missile is intended for use in a RAM GMLS MK 49. The MK 44 MOD 2/3 are upgrades to the RAM MK 44 MOD 0/1 missile systems employing either dual-mode passive RF/IR guidance or autonomous IR guidance and incorporates a new seeker assembly in the missile and a large external desiccant cartridge on the Canister strong back. Because the missile uses a passive guidance system, it does not require a shipboard illuminator, thus providing a “fire and forget” missile operation capability. The MK 47 is the telemetry version of the MK 44 and replaces the WDU-17/B warhead, Safe and Arm (S&A) with the MK 13 telemeter.

b. The missile is installed in a launch canister that provides environmental, Electromagnetic Pulse (EMP), and Electromagnetic Interference (EMI) protection and serves as a launch tube.

c. The missile uses a solid-fuel rocket motor and squib-activated energy sources. These energy sources include thermal batteries for electrical power, an argon gas supply for IR system cooling, and a spring wound spin-up device for the Roll-Free Gyro (RFG), released by a squib.

d. Surfaces on the folded missile tail assembly contact counterclockwise-spiraled rails inside the canister. When the missile is launched, it must rotate to exit, thus imparting an initial roll to the missile. Missile tail surface offsets sustain the roll rate throughout the flight.

e. At launch, the missile RF receiver acquires the target and guides the missile. Once target IR energy becomes sufficient, guidance switches to the more accurate IR mode until intercept.

	SURFACE-TO-AIR RIM	SURFACE-TO-AIR RTM
Rolling Airframe Missile, RIM-116A/B	MK 44 MOD 0 MK 44 MOD 1 MK 44 MOD 2 MK 44 MOD 3	MK 47 MOD 1 MK 47 MOD 6 MK 47 MOD 7

Figure 9-2-1. Missile Model Matrix

ACTIVITY	LEVEL OF RESPONSIBILITY
Ship	Organizational level maintenance.
NMC CONUS East Division Detachment Yorktown	Intermediate level maintenance for missile. Depot level maintenance for containers.
Army Ordnance Depot Tooele, UT	Intermediate level maintenance for missile. Depot level maintenance for containers.
Naval Munitions Command, Sasebo	Intermediate level maintenance for missile.
Weapon Station Earle (PHS&T Center)	Designated overhaul point for containers.
NSWC, Indian Head	Ordnance Assessment of rocket motors and warheads.
NSWC, Crane	Ordnance Assessment of batteries, AOTD and S&A.
Contractor: Raytheon	Depot level maintenance.

Figure 9-2-2. Assigned Level of Maintenance for RAM

Figure 9-2-3. RAM Logbook Sample

GENERAL INSTRUCTIONS

REMARKS
This Logbook is formatted for use by all participating Governments in the MK 31 RAM Guided Missile Weapon System. If the Logbook becomes separated from its respective Guided Missile Round Pack (GMRP), or when a missile is expended, the information will be entered into the Logbook and the entire Logbook (original Logbook) shall be forwarded by all countries to the below address:

Naval Surface Warfare Center Corona Division
Code RA22
PO Box 5000
Corona, California 92878-5000
FAX: 1(951) 273-5374

GERMAN AMMUNITION DATA CARD REQUIREMENTS
German Ammunition Data Cards are provided with all German Navy Logbooks by the German Government.

U.S. ORGANIZATIONAL/SHIPBOARD LEVEL GMRP INSPECTIONS
All GMRPs are required to have a receipt inspection. The Organizational/Shipboard level GMRP receipt inspection and procedures are specified in Maintenance Requirements Card (MRC) number R-14.

U.S. INTERMEDIATE LEVEL GMRP INSPECTIONS
All GMRPs are required to have a receipt inspection. The Intermediate level GMRP receipt inspection and procedures are specified in CHAPTER 4 of the NAVSEA Receipt, Storage and Issue Sentencing Technical Manual number TW010-AC-ORD-010.

U.S. DEPOT LEVEL GMRP INSPECTIONS
All GMRPs are required to have a receipt inspection. The Depot level GMRP receipt inspection and procedures are specified in the Raytheon, Tucson Contracts.

U.S. AND GERMAN GMRP RECERTIFICATION DUE DATE (RDD)
GMRPs with expired Recertification Due Date (RDD) shall be shipped to the following applicable facilities:

U.S. NAVY ADDRESS
Raytheon Missile Systems
1151 E. Hermans Road
Building 866 - FACO Receiving
(RAM)
Tucson, Arizona 85706

GERMAN NAVY ADDRESS
Marinem Munitions Depot #4
Fuhrenkamp
D 26340 Zetel
Germany5374

Figure 9-2-3. RAM Logbook Sample - contd.

RAM GMRP CONFIGURATION SUMMARY				1. DATE PREPARED	2. MK/MOD	3. RAM GMRP SN
				4. ACTIVITY UIC	5. NALC	6. NSN
7. RFI DATE	8. LAST TEST DATE	9. RECERTIFICATION DUE DATE 9		10. CONDITION CODE	11. QA STAMP	
12. COMPONENT NAME	13. PART NUMBER (SOFTWARE VERSION)	14. SERIAL NUMBER (CHECK SUM)	15. LOT NO.	16. MANUFACTURER	17. MANUFACTURER DATE	
18. DEVIATIONS AND WAIVERS		19. ORDALT/ECP INCORPORATED		20. TELEMETRY FREQUENCY (MHZ)		
21. REMARKS						

Figure 9-2-3. RAM Logbook Sample - contd.

RAM GMRP CONFIGURATION SUMMARY INSTRUCTIONS

This RAM GMRP CONFIGURATION SUMMARY form is only to be completed by the GMRP Original Equipment Manufacturer (OEM). A copy of the completed Logbook shall be mailed to the specified address as noted on the GENERAL INSTRUCTIONS page (second page of this Logbook).

BLOCK	INSTRUCTIONS
1.	Enter the Date the form was prepared.
2.	Enter the MK/MOD of the Guided Missile Round Pack (GMRP).
3.	Enter the Serial Number of the GMRP.
4.	Enter the Unit Identification Code (UIC) of the processing activity.
5.	Enter the Navy Ammunition Logistics Code (NALC) of the GMRP.
6.	Enter the National Stock Number (NSN) of the GMRP.
7.	Enter the date that the missile was Ready For Issue (RFI).
8.	Enter the Date of the last successful functional Guidance & Control Group (G&CG) test.
9.	Enter the Recertification Due Date (RDD). (Recertification intervals: Block 0: US = 10 years, GE = 7 years; Block 1: US&GE = 7 years. The Recertification Interval begins at the last successful Guidance and Control Group Test. See Block 8)
10.	Enter the Material Condition Code of the GMRP.
11.	Enter the Government or Contractor QA stamp for the inspector performing final acceptance of the GMRP.
12.	No entries required. (Preprinted component names).
13.	Enter the MK/MOD or Part Number of the component. (For Software Version/Check Sum enter Software Version Number)
14.	Enter the Serial Number of the component. (For Software Version/Check Sum enter Check Sum)
15.	Enter the Lot Number of the component (if applicable). (Note: for the Propulsion lot number, enter the Rocket Motor lot number).
16.	Enter the Name (acronym) of the manufacturer of the component. (Note: for the Propulsion Section enter the Rocket Motor manufacturer).
17.	Enter the Manufacture Date of the component.
18.	Enter the Deviation or Wavier (current processing).
19.	Enter all ORDALT/ECP incorporated.
20.	Enter Telemeter Frequency.
21.	Enter any configuration remarks that exceeds the available space in blocks 1 - 20 above.

Figure 9-2-3. RAM Logbook Sample - contd.

RAM GMRP TRANSACTION LOG (Instructions are on the back of this page)				1. RAM GMRP SERIAL NUMBER & MK MOD		
2. DATE	3. ACTIVITY (UIC)	4. CONDITION CODE	5. INITIAL	6. HUMIDITY LEVEL %	7. CONTAINER S/N	8. REMARKS

Figure 9-2-3. RAM Logbook Sample - contd.

RAM GMRP TRANSACTION LOG (Instructions are on the back of this page)				1. RAM GMRP SERIAL NUMBER & MK MOD		
2. DATE	3. ACTIVITY (UIC)	4. CONDITION CODE	5. INITIAL	6. HUMIDITY LEVEL %	7. CONTAINER S/N	8. REMARKS

RAM GMRP TRANSACTION LOG INSTRUCTIONS

Whenever a Guided Missile Round Pack (GMRP) changes custody (shipped or received), this form shall be completed and a copy of this form shall be forwarded to the address below. Information regarding any delay between date shipped and date received shall be explained. Information on damage intransit is required in addition to any other reports required. If the GMRP has been exposed to some extreme condition, such as a vehicle accident or the weapon has been dropped, these facts shall be noted in the "Remarks" column and amplified on the back of the page, even if there is no apparent damage. The exposure of the weapon to an extreme condition shall be reported as a potentially hazardous incident and recorded. Additionally, shipboard GMRP stowage location shall be recorded.

NOTE: Within 24 hours after each entry, make a copy of this Transaction Log and forward to:

Naval Surface Warfare Center Corona Division
Code RA22
PO Box 5000
Corona, California 92878-5000
FAX: 1(951) 273-5374

German Navy:
German Naval Office ML 522
Kopernikusstrasse 1
18063 Rostoc GERMANY
FAX: 49 (381) 802-5993

BLOCK	INSTRUCTIONS
1.	Enter the Serial Number and MK MOD of the GMRP.
2.	Enter the Date shipped, received, or stowed.
3.	Enter the Activity Unit Identification Code (UIC).
4.	Enter the GMRP Condition Code.
5.	Enter the Initials of the individual responsible for shipping/receiving.
6.	Enter the Humidity Level % reading from the Canister Humidity Indicator.
7.	Enter the GMRP Container Serial Number.
8.	The following information shall be written in the Remarks block:

A. Enter "shipped" if transferring the GMRP to another activity. Enter "received" upon receipt from another activity.

B. Enter the reason for transportation delays or discrepancies discovered during receipt inspection (including broken security seals), or other significant incidents.

C. Enter shipboard stowage location (example: magazine or GMLS Cell #).

D. If the Material Condition Code changes, enter the reason for the change and/or the defect code.

Figure 9-2-3. RAM Logbook Sample - contd.

RAM GMRP SHIPPING CONTAINER SECURITY SEAL RECORD (Instructions are on the back of this page)					1. RAM GMRP SERIAL NUMBER & MK MOD		
SEAL NO. 1 (AFT)			SEAL NO. 2 (FWD)			5.	6.
2. SEAL #	3. DATE	4. INITIAL	2. SEAL #	3. DATE	4. INITIAL	CONTAINER SERIAL #	REMARKS

Figure 9-2-3. RAM Logbook Sample - contd.

RAM GMRP SHIPPING CONTAINER SECURITY SEAL RECORD INSTRUCTIONS

Security Seal Installation: This form is to be filled out by all personnel who are responsible for loading GMRPs into the RAM GMRP Shipping Container. To ensure the integrity of the GMRPs inside the Shipping Container, two (2) Security Seals shall be installed to the front right and left corners of each shipping container. Whenever a Shipping Container is shipped or received, an entry shall be made in the GMRP Logbook to record the condition of the Shipping Container Security Seals and a copy of this form shall be mailed to the following address:

Naval Surface Warfare Center Corona Division
Code RA22
PO Box 5000
Corona, California 92878-5000
FAX: 1(951) 273-5374

German Navy:
German Naval Office ML 522
Kopernikusstrasse 1
18063 Rostoc GERMANY
FAX: 49 (381) 802-5993

Security Seal Inspections: If one or both of the Security Seals are found to be tampered with or broken, the following shall be performed: (1) U.S. Navy Fleet: The Organizational/Shipboard level shall perform a GMRP Inspection as called out in the Maintenance Requirements Card (MRC) Number R-14. (2) Weapon Stations or NMC Detachments: The Intermediate level shall perform a GMRP Inspection as described in NAVSUP P-805/807.

Upon removal of Security Seals, draw a single line through the seal data. When new seals are installed, record the data as follows:

BLOCK	INSTRUCTIONS
1.	Enter the Serial Number and MK MOD of the GMRP.
2.	Enter the Seal Number stamped into the AFT and FWD upon installation.
3.	Enter the Date (month/day/year) the seal was installed.
4.	Enter the Initials or stamp of the person installing the seal.
5.	Enter the GMRP Container serial number.
6.	Enter all Remarks. Enter specific seals found broken, circumstances, and specific steps taken to re-establish seal integrity.

Figure 9-2-3. RAM Logbook Sample - contd.

RAM GMRP FIRING SHIP REPORT			1. DATE PREPARED Month Day Year
2. MK/MOD	3. RAM GMRP SERIAL NUMBER	4. ACTIVITY UIC: SHIP NAME: HULL # :	
5. DEFICIENCIES: Indicate Deficiencies as follows. Describe details under "FIRING SHIP REMARKS"			
MISFIRE HANGFIRE DUD MISSILE NOT READY OTHER			
NOTE: If the deficient RAM GMRP is being transferred, enter information in Transaction Log and forward copies of Transaction Log and shipping document to:		COMMANDING OFFICER ATTN: RAM PREFLIGHT ANALYSIS PROGRAM Naval Surface Warfare Center Corona Division (RA22) PO Box 5000 Corona, California 92878-5000 +1 FAX (951) 273-5374	
6. STATUS DATE FIRED DATE TIME GROUP OF FIRING MESSAGE_____			
NOTE: If missile has been fired, return entire logbook and a copy of the Firing Message to:		COMMANDING OFFICER ATTN: RAM PREFLIGHT ANALYSIS PROGRAM Naval Surface Warfare Center Corona Division (RA22) PO Box 5000 Corona, California 92878-5000 +1 FAX (951) 273-5374	
7. FIRING SHIP REMARKS			

Figure 9-2-3. RAM Logbook Sample - contd.

RAM GMRP FIRING SHIP REPORT INSTRUCTIONS

When a RAM Missile has been fired, this "RAM GMRP FIRING SHIP REPORT" form shall be completed and a brief unclassified description of the event shall be entered in the "Firing Ship Remarks" block. This is in addition to the formal firing reports required by Type Commanders and others. After this form has been completed, the entire Logbook (original Logbook) shall be forwarded to the below address:

Naval Surface Warfare Center Corona Division
Code RA22
PO Box 5000
Corona, California 92878-5000
FAX: 1(951) 273-5374

German Navy:
German Naval Office ML 522
Kopernikusstrasse 1
18063 Rostoc GERMANY
FAX: 49 (381) 802-5993

BLOCK	INSTRUCTIONS
1.	Enter the Date Prepared.
2.	Enter the MK MOD and NALC of the GMRP.
3.	Enter the Serial Number of the GMRP.
4.	Enter the Activity Unit Identification Code (UIC), Ship Name, and HULL no.
5.	Indicate the Deficiency with a check mark.
6.	Enter the Status Information.
7.	Enter the Firing Ship Remarks.

Figure 9-2-3. RAM Logbook Sample - contd.

f. The payload is a conventional high-explosive warhead, detonated by the MK 20 MOD 1/2 active optical target detector (AOTD) or the contact sensor in the control section.

g. The MK 44 MOD 3 contains software upgrades that enhance the missile's capability to engage and destroy incoming ASMs, helicopters, fixed-wing aircraft, and engage-and-intercept surface targets.

h. The MK 44 MOD 4 and MK 47 MOD 8/9 enhances the kinematic and guidance capability of RAM by replacing the 5 inch rocket motor with a new composite 6.25 inch motor as well as incorporating other air-frame enhancements. The new rocket motor is a boost and sustain design which is capable of a longer burn time with a resultant increase in maneuverability at longer range. The new airframe makes the missile more robust to enable the increased maneuverability required to successfully destroy current and future threats. A four independent canard control surface configuration replaces the two-canard design. The analog RF receiver is replaced with a new digital Evolved Radio Frequency (ERF) receiver. The new receiver increases performance capabilities to include countering Low Probability of Intercept (LPI) threats and stream raids, and improves threat recognition.

CHAPTER 9.3

Conventional Tomahawk Support Activity Site Activation and Inspection Criteria

Table of Contents

Paragraph	Subject	Page
9.3.1	General	9-3-1
9.3.2	Scope	9-3-1
9.3.3	Discussion	9-3-1
9.3.4	TWS Support Activity Site Activation	9-3-1
9.3.5	Qualification/Certification (Qual/Cert) Program	9-3-3
9.3.6	TWS Support Activity Site Periodic Inspection	9-3-3
9.3.7	TWS Certification Training Requirements	9-3-7
9.3.8	TWS All-Up-Round (AUR) Support Site Definitions	9-3-7
9.3.9	Policy	9-3-9
9.3.10	Action	9-3-9
9.3.11	Generic Proficiency Checklist	9-3-9
9.3.12	Tomahawk Weapons System AUR Training Concept	9-3-12

List of Illustrations

Figure	Title	Page
9-3-1	TWS Support Activity Capabilities	9-3-2
9-3-2	TWS Certification Process Schedule	9-3-4
9-3-3	Tomahawk Weapon Systems AUR Training Concept	9-3-8

CHAPTER 9.3

Conventional Tomahawk Support Activity Site Activation and Inspection Criteria

9.3.1 General. To promulgate policy and procedures for Tomahawk Weapons System (TWS) conventional All-Up-Round (AUR) support activity site activation, and provide activities with Program Executive Officer, Unmanned Aviation and Strike Weapons PEO (U&W) sponsored formal training and site support. This policy will expedite and identify the process for TWS site activation via standardized TWS AUR qualification requirements and provide the Commanding Officer (CO)/Officer-In-Charge (OIC) with prerequisites for personnel certification under OPNAVINST OPNAVINST 8020.14 and NAVSEA OP 4 and 5. This plan provides direction for periodic Logistics Evaluations (LOGEVAL), Tomahawk Training, and Tomahawk Inspections by PEO (U&W) representatives and cognizant In-Service Engineering Agents (ISEAs). Figure 9-3-1 provides a list of conventional Tomahawk support activities and their authorized capabilities.

9.3.2 Scope. This manual applies to all TWS Intermediate Maintenance Activities (IMAs), ashore and afloat, assigned as a conventional TWS AUR support activity. Combatants receiving, loading and handling TWS AURs, and TWS tactical qualification and certifications are covered in COMNAVSURFORINST 8820.1 and COMNAVSUBFORINST 8500.4.

9.3.2.1 Provisions of this document apply to the certification of those items and resources currently approved or designated in support of the Tomahawk AUR. They include, but are not limited to: facilities; support equipment; supply support to include spares, repair parts, tools and consumables; trainers and training devices; Ordnance Handling Equipment (OHE); items in support of Packaging, Handling, Storage, and Transportation (PHS&T); technical documentation including handling and maintenance procedures, records and reports; and personnel.

9.3.3 Discussion. OPNAVINST 8020.14 establishes the Chief of Naval Operations (CNO) U.S. Navy Explosives Safety Policy, Requirements and Procedures. OPNAVINST 8020.14 also defines and assigns responsibilities for the Navy Explosive Safety Program. PEO (U&W) establishes the program for activation and periodic inspection of sites that load, handle, store, and maintain conventional Tomahawk AUR variants.

9.3.4 TWS Support Activity Site Activation. The following procedures are for activating a conventional Tomahawk AUR support activity (shore station/tenders as applicable) when requested by Fleet Force Commander/Type Commander (TYCOM) and concurred with by the Sponsor (OPNAV N96/N97/N41).

a. PEO (U&W) conducts a physical site survey to assess the capability of an activity to provide the requested help.

b. PEO (U&W) provides, as applicable, the TYCOM, a written site survey report identifying the activities' capabilities/limitations, including recommendations to make the site TWS capable.

c. PEO (U&W) coordinates with the respective ISEA to provide initial equipment and spares outfitting, LOGEVAL, formal personnel training, and technical assist visits to ensure the activity is capable of performing all assigned Tomahawk AUR support functions.

TWS SUPPORT ACTIVITY CAPABILITIES			
EAST COAST CONUS	**VLS**	**TTL**	**CLS**
NMC CED DET Earle	IMA-2	*	*
NMC CED DET Mayport	IMA-5	–	–
NMC CED DET Sewells Point	IMA-6	IMA-5	IMA-5
NMC CED DET Yorktown	IMA-1	IMA-1	IMA-1
NSSF New London CT	–	IMA-1	IMA-1
SWFLANT Kings Bay GA	–	–	IMA-7
TRF/DOSF Kings Bay GA	–	IMA-1	IMA-1
WEST COAST CONUS	**VLS**	**TTL**	**CLS**
NMC CWD DET Indian Island	IMA-2	IMA-1	IMA-3
NMC CWD DET Seal Beach	IMA-1	IMA-1**	IMA-1**
NMC CWD DET North Island	IMA-5	–	–
NMC CWD DET Point Loma	–	IMA-1	IMA-1
PACIFIC	**VLS**	**TTL**	**CLS**
NMC EAD DET Pearl Harbor	IMA-1	IMA-1	IMA-1
PH Naval Shipyard IMF	–	–	IMA-6
NMC EAD Unit Guam	IMA-2/QRT	IMA-1/QRT	IMA-1/QRT
NMC EAD DET Yokosuka	IMA-2	IMA-1	–
USS Frank Cable (AS-40)	IMA-4	IMA-4	IMA-4
MEDITERRANEAN	**VLS**	**TTL**	**CLS**
NMC DET Sigonella	IMA-6/QRT	–	–
NMC DET Rota	QRT	QRT	IMA-7/QRT
INDIAN OCEAN	**VLS**	**TTL**	**CLS**
USS Emory S. Land (AS-39)	IMA-4	IMA-4	IMA-4

*The facility is sited for TWS, but is not currently outfitted, trained, or certified due to no present Fleet requirements for Tomahawk AUR loading and handling.

**No load/offload of combatants.

Figure 9-3-1. TWS Support Activity Capabilities

d. PEO (U&W) plans and coordinates the training dates with the Submarine Learning Center Detachment (SLC DET) San Diego, CA and the applicable support site. SLC DET San Diego provides initial and refresher training for TWS support activity personnel. Upon completion of training, an official letter of completion and certificate of formal training will be provided to the site CO/OIC. This letter signifies that site trained personnel have the basic Tomahawk AUR knowledge and skills leading to certification under the Command's Explosive Qualification and Certification (QUAL/CERT) program in accordance with OPNAVINST 8023.24.

e. PEO (U&W) will coordinate a site activation inspection to ensure the activity can perform assigned functions in accordance with authorized documentation. The site activation team leader will be PEO (U&W). The remainder of the team, designated by PMA-280, will consist of ISEA and other PEO (U&W) representatives.

f. PMA-280 will issue a certification letter to the CO/OIC/TYCOM/Fleet Force Commander upon completion of the site activation process.

9.3.5 Qualification/Certification (Qual/Cert) Program. OPNAVINST 8023.24 establishes Navy policy promulgating responsibility and procedures for developing, implementing, and maintaining a Qual/Cert program in accordance with OPNAVINST 8020.14 and NAVSEA OP 4 and 5.

9.3.6 TWS Support Activity Site Periodic Inspection. Inspection of a TWS support activity consists of an observation and assessment of the Command's ability to satisfactorily perform Tomahawk AUR support operations.

a. Inspection. Representatives of PEO (U&W), Naval Undersea Warfare Center Division Newport (NUWCDIVNPT), Naval Surface Warfare Center Port Hueneme Division (NSWC PHD) and Naval Surface Warfare Center Indian Head Detachment (NSWCIHDET) Earle compose the inspection team. After coordination with all participants, PMA-280 will issue a letter announcing the TWS site certification process approximately 3 to 6 weeks prior to the LOGEVAL with distribution to the applicable support activity, appropriate authority, and participating agencies. The certification process is comprised of the LOGEVAL, formal training, and the certification inspection. PEO (U&W) will act as or assign a Team Leader (TL) for conduct of the inspection. The TL will brief the CO/OIC prior to commencing the inspection, will oversee the inspection process, and provide an oral and written report to the CO/OIC upon completion of the inspection. The written report will include deficiencies identified by the inspection team in addition to recommendations.

(1) Approximately 3 - 4 weeks after completion of the inspection, PMA-280 will provide a certification letter to the activity CO/OIC/TYCOM stating the activity is considered qualified to continue TWS support operations and recommended recertification for a period as defined in Figure 9-3-2.

(2) If the TL determines the activity is incapable of safely and effectively performing Tomahawk AUR support operations, the TL will recommend to the activity CO/OIC that operations be suspended until additional training is held. If operational requirements indicate an immediate commitment, the inspection team will provide technical assistance, refresher training, and logistics support. Following the provided assistance, the operation(s) may be performed in the presence of a PEO (U&W)/ISEA representative until formal certification is accomplished.

TWS INSPECTION PERIODICITY SCHEDULE		
EAST COAST CONUS	**24 Months**	**36 Months**
NMC CED DET Mayport		X
NMC CED DET Sewells Point	X	
NMC CED DET Yorktown	X	
NSSF New London CT	X	
SWFLANT Kings Bay GA	X	
TRF/DOSF Kings Bay GA	X	
WEST COAST CONUS		
NMC CWD DET Indian Island	X	
NMC CWD DET Seal Beach	X	
NMC CWD DET North Island	X	
NMC CWD DET Point Loma	X	
PACIFIC		
NMC EAD DET Pearl Harbor	X	
PH Naval Shipyard IMF	X	
NMC EAD Unit Guam	X	
NMC EAD DET Yokosuka	X	
USS Frank Cable (AS-40)	X*	
MEDITERRANEAN		
NMC DET Sigonella	X	
NMC DET Rota	X	
INDIAN OCEAN		
USS Emory S. Land (AS-39)	X*	
*The certification periodicity may be shortened to support the unique manning requirements and crew turnover for the AS-39 and AS-40.		

Figure 9-3-2. TWS Certification Process Schedule

TWS LOGISTIC EVALUATION PERIODICITY SCHEDULE		
EAST COAST CONUS	**24 Months**	**36 Months**
NMC CED DET Mayport		X
NMC CED DET Sewells Point	X	
NMC CED DET Yorktown	X	
NSSF New London CT	X	
SWFLANT Kings Bay GA	X	
TRF/DOSF Kings Bay GA	X	
WEST COAST CONUS		
NMC CWD DET Indian Island	X	
NMC CWD DET Seal Beach	X	
NMC CWD DET North Island	X	
NMC CWD DET Point Loma	X	
PACIFIC		
NMC EAD DET Pearl Harbor	X	
PH Naval Shipyard IMF	X	
NMC EAD Unit Guam	X	
NMC EAD DET Yokosuka	X	
USS Frank Cable (AS-40)	X*	
MEDITERRANEAN		
NMC DET Sigonella	X	
NMC DET Rota	X	
INDIAN OCEAN		
USS Emory S. Land (AS-39)	X*	
*The LOGEVAL periodicity may be shortened to support the unique manning requirements and crew turnover for the AS-39 and AS-40.		

Figure 9-3-2. TWS Certification Process Schedule - contd.

TWS TRAINING PERIODICITY SCHEDULE		
EAST COAST CONUS	**12 Months**	**18 Months**
NMC CED DET Mayport		X
NMC CED DET Sewells Point	X	
NMC CED DET Yorktown	X	
NSSF New London CT	X	
SWFLANT Kings Bay GA	X	
TRF/DOSF Kings Bay GA	X	
WEST COAST CONUS		
NMC CWD DET Indian Island	X	
NMC CWD DET Seal Beach	X	
NMC CWD DET North Island	X	
NMC CWD DET Point Loma	X	
PACIFIC		
NMC EAD DET Pearl Harbor	X	
PH Naval Shipyard IMF	X	
NMC EAD Unit Guam	X	
NMC EAD DET Yokosuka	X	
USS Frank Cable (AS-40)	X	
MEDITERRANEAN		
NMC DET Sigonella	X	
NMC DET Rota	X	
INDIAN OCEAN		
USS Emory S. Land (AS-39)	X	

Figure 9-3-2. TWS Certification Process Schedule - contd.

b. The Tomahawk AUR certification process site interval is as directed in Figure 9-3-2 and ranges between 24/36 months based on site manning, personnel turnover, TWS and support operations proficiency.

c. Certification Process. The certification process consists of a LOGEVAL, site refresher training, and a formal inspection. During the LOGEVAL, Paragraph 9.3.11 Generic Proficiency Checklist, can be used as guidance to verify the logistics support capability of the site The purpose of the LOGEVAL is to evaluate the material condition of the site prior to the training. During the formal inspection, the site will be required to demonstrate its capability to perform assigned functions. Figure 9-3-2 provides the periodicity for the LOGEVAL, training and site inspection.

9.3.7 TWS Certification Training Requirements.

a. SLC DET San Diego will conduct formal training on a 12/15/18 month basis, depending on the site, to ensure sites maintain their technical proficiency. Figure 9-3-2 provides the training periodicity for each TWS support activity. Training conducted prior to site activation is referred to as Initial Training. Training conducted after site activation is referred to as Refresher Training. Refresher Training is conducted approximately 3-6 weeks prior to the re-inspection. Additional training may be provided upon request to PMA-280. It is recommended that the Leading Chief Petty Officers (LCPO) assigned to a TWS support activity complete the Tomahawk Supervisor and Manager Course upon arrival to the TWS support duty station.

b. Upon completion of training, SLC DET San Diego will provide a letter to the CO/OIC enclosing "Certificate of Training" as proof of individual formal Tomahawk handling and maintenance training. On-the-Job training (OJT), combined with Tomahawk Interactive Courseware (ICW) may be used for refresher training to maintain personnel QUAL/CERT proficiency. The Tomahawk ICWs are accessible online at Navy Knowledge Online (NKO) E-Learning website at https://wwwa.nko.navy.mil.

c. Figure 9-3-3 lists the Tomahawk AUR training courses available, and provides information required to request training.

9.3.8 TWS All-Up-Round (AUR) Support Site Definitions. Figure 9-3-1 lists the capabilities of each TWS AUR support activity. The following are the PEO (U&W) established IMA definitions for TWS AUR support activities, based on defined capabilities.

a. IMA-1 Shore Activity. All authorized maintenance by variant (see Figure 9-3-1). Receipt/issue inspections, load/offload combatants, storage and handling of Tomahawk AUR. The capability of a site to support a particular Tomahawk AUR variant is established during the site activation process, and is dependent on the Fleet operational requirements for the area.

b. IMA-2 Shore Activity (surface only). Performs all Tomahawk AUR support functions of IMA-1, except Vertical Launching System (VLS) AUR encanister/decanister.

c. IMA-3 Shore Activity. All authorized maintenance, receipt/issue inspections, load/offload combatants, storage and handling of all Tomahawk AUR. This includes load/offload of Tomahawk Capsule Launching System (CLS) AUR on Guided Missile Submarine, Nuclear (SSGN).

d. IMA-4 Submarine Tender. Handles and stores all submarine and surface Tomahawk AUR configurations, performs all authorized maintenance (with the exception of VLS encanister/decanister), receipt/issue inspections, load/offload. This includes load/offload of Tomahawk CLS AUR on SSGN.

TWS AUR TRAINING SLC DET SAN DIEGO, CA COURSES		
Course Number	**Description**	**Course Length**
K-644-9049	Tomahawk TTL AUR Warheading & Maintenance Procedures	5 Day
K-644-9050	Tomahawk VLS Encanister & Decanister Procedures	5 Day
K-644-9057	Tomahawk Supervisor & Manager Training	4 Day
K-644-9058	Tomahawk VLS Handling and Crossdeck Team Training	2 Day
A-644-0001	Tomahawk AUR Handling & Maintenance for CLS, TTL, VLS & SSGN	7 Day

Figure 9-3-3. Tomahawk Weapon Systems AUR Training Concept

e. IMA-5 Shore Activity. Tomahawk AUR limited maintenance capability which includes capability to load, handle, and temporarily store.

f. IMA-6 Shore Activity. Tomahawk AUR loading/handling only.

g. IMA-7 Shore Activity (submarine CLS). All authorized maintenance, receipt/issue inspections, storage and handling, and load/offload for Tomahawk CLS AUR on SSGN.

h. Quick Response Team (QRT) Shore Activity. Provides personnel and support equipment for reload of all Tomahawk AUR and forward deployed sites. This includes load/offload of Tomahawk CLS AUR on SSGN.

9.3.9 Policy. PEO (U&W) will:

a. Coordinate with TYCOM/COMUSFLTFORCES to ensure identification and documentation of support requirements.

b. Coordinate activation of support sites with the Office of the Chief of Naval Operations (OPNAV) resource sponsor and the TYCOM/Fleet Force Commander.

c. Assist Fleet Force Commander/TYCOM/CO/OIC of identified support activity with integrating Tomahawk requirements into the Command's Ammunition and Explosives (A&E) QUAL/CERT program.

d. Ensure site activation and site inspection visits are conducted as required.

9.3.10 Action. PMA-280 shall coordinate and implement the procedures delineated in this chapter.

9.3.11 Generic Proficiency Checklist.

9.3.11.1 Introduction. This checklist is intended to be a guide for activities performing TWS support functions when preparing for a Tomahawk Logistics Evaluation or Certification/Re-Certification Inspection. Prior to the LOGEVAL, an ISEA representative will provide detailed information regarding activity requirements. The following sections reflect the specific topics that will be reviewed during the LOGEVAL/inspection.

9.3.11.2 Documentation.

a. Verify applicable logistic and technical publications are available and current.

b. Planned Maintenance System (PMS). Verify appropriate Maintenance Index Pages (MIPs) and Maintenance Requirements Cards (MRCs) are on file in accordance with OPNAVINST 4790.4.

9.3.11.3 Records and Reports.

a. All errors, omissions, deficiencies and suggestions for improvements to PEO (U&W) Tomahawk AUR Logistics and Maintenance Technical Information Products (TALMIPs), shall be reported to Naval Surface Warfare Center Division, Naval Systems Data Support Activity using NAVSEA/SPAWAR Technical Manual Deficiency/Evaluation Report (TMDER), NAVSEA Form 4160/1. The preferred reporting method is the on-line TMDER input page at https://nsdsa2.phdnswc.navy.mil.

b. Electronic Cruise Missile Field Report (ECMFR). TWS support activities will report all damaged, faulty or failed equipment and Tomahawk AURs via an ECMFR. Reports are to be entered in the Tomahawk Missile Information System (TOMIS).

c. Ordnance Information System (OIS). Ensure the activity is conforming to OIS and Ammunition Transaction Report (ATR) requirements in accordance with applicable documentation.

d. Report of Deficiency (ROD). Ensure ROD reports are being submitted when required for identification, reporting and resolution of discrepant shipments of material when the deficiency is attributable to a shipper (issuer) error.

e. Tomahawk Record Book (TRB) and Auxiliary records. Ensure TRBs are current, properly maintained, and personnel are familiar with all TRB requirements.

f. Inspect weapon personnel quality assurance program and qualification/certification records.

g. Inspect OHE height test and calibration records.

h. Inspect crane operator and transportation personnel training and physical exam records.

i. Ordnance Alteration (ORDALT). Technical Directive (TD), and Technical Change (TC) information. Verify records for ORDALTs/TDs/TCs to Tomahawk AURs and associated support equipment. Ensure reports are available, correct and submitted as required.

9.3.11.4 Training. Tomahawk support activities will receive periodic refresher training on a 12/15/18 month basis, or sooner if the inspection team determines there is a performance deficiency. Refresher training is provided by SLC DET San Diego with authorization through PMA-280.

a. Verify that a command training program exists for TWS support capabilities.

b. Review personnel training records.

c. Identify ICW modules used with respect to assigned capabilities are utilized in the command training program. A list of available ICWs is provided in N86-NTSP-S-30-9410 and SL170-AA-GYD-010 Tomahawk AUR Logistics Guide, and are available online at E-Learning on the NKO website at https://wwwa.nko.navy.mil

d. Ensure manning supports level of required tasking.

e. Ensure replacement personnel have received OJT.

9.3.11.5 Facilities-Security-Transportation-Storage. The Naval Weapon System Explosives Safety Review Board (WSESRB), prior to inspection, must certify all facilities are sited and approved for Tomahawk AUR loading and handling support.

a. Shop Facilities.

(1) Verify adequate space is allocated for maintenance of all assigned Tomahawk AUR capabilities. Associated support equipment, containers, and shipping devices in accordance with the TWS Site Activation Plan.

(2) Verify safety procedures are posted and followed at all times.

(3) Verify Safe Working Load (SWL) capacity and test periodicity labels are properly affixed to handling equipment.

(4) Verify support and handling equipment is properly maintained and in satisfactory condition.

(5) Verify periodic maintenance actions have been performed on support and handling equipment in accordance with the applicable technical manual or MRC.

b. Security.

(1) Verify proper security measures are in place for storage and handling of AURs in accordance with OPNAVINST C5513.2, Enclosure 71, Cruise Missiles Classification Guide.

c. Transportation.

(1) Ensure activity has a copy of PEO (W) P4601/1Tomahawk Transportation Plan, Revision A, and personnel are familiar with the plan.

(2) Verify personnel are aware of sympathetic detonation restrictions and Explosive Safety Quantity Distance (ESQD) are requirements.

d. Storage Facilities.

(1) Verify safe and secure storage of Tomahawk AURs. Storage areas must have appropriate utilities and adequate access and egress.

(2) Verify adequate, safe and secure storage of inert equipment, tools, parts, material, handling, shapes, containers, shipping devices, and documentation with appropriate utilities and adequate entrance and egress.

(3) Verify accommodations and knowledge for compliance with documented storage requirements relating to compatibility grouping, stack height, hard point support restrictions, and accessibility for maintenance as required for each variant of the Tomahawk AUR.

(4) Verify safe and secure area for storage of hazardous/contaminated material.

(5) Verify OHE for loading/offloading combatants and supply ships is available, in satisfactory condition, properly tested and stored.

(6) Verify suitable areas and equipment are designated for the collection/removal of contaminated water from expended CLS capsules.

(7) Verify required utilities are available for Tomahawk AUR operations and support and test equipment PMS operations.

(8) Verify temporary storage areas are designated for Tomahawk AURs and inert equipment.

9.3.11.6 Supply Support/Support Equipment.

a. Ensure the activity has all equipment, tools and consumables prescribed in applicable Allowance Equipage Lists (AELs), Allowance Parts Lists (APLs), and the Coordinated-Shipboard Allowance List (COSAL), or the Consolidated Shore Based Allowance List (COSBAL) for the assigned capability. Ensure satisfactory condition and operation of all support equipment. Ensure maintenance records are correct and current.

b. Verify support and test equipment is calibrated, as required, and required calibration data is properly affixed.

c. Verify weight test requirements are current.

d. Verify Master Stock Records (MSRs) reflect required spare parts in accordance with appropriate APL.

e. Verify hi/low limits and shelf life requirements are valid.

f. Verify all greases, o-rings, and consumables are within shelf life expiration date and are required in accordance with technical documentation.

g. Ensure applicable Material Safety Data (MSD) sheets are available and personnel are familiar with the MSD sheets, and their location.

9.3.11.7 Technical Operations.

a. Verify the activity has sufficient personnel in the Command's QUAL/CERT Program.

b. Observe maintenance and handling operations for adequacy, standardization, and proficiency as follows:

(1) Adherence to prescribed procedures of current documentation.

(2) Proper use of Tomahawk equipment and tools.

(3) Observance of safety precautions.

(4) Observance of Quality Assurance/Quality Control requirements.

c. Observe simulated fuel spill cleanup in accordance with SW820-AP-MMI-020, OP 1, or applicable local hazardous material response requirements.

9.3.12 Tomahawk Weapons System AUR Training Concept.

9.3.12.1 Training General. Tomahawk AUR training is available upon request from SLC DET San Diego. Training courses have been developed for instruction at SLC DET San Diego or onsite by a Mobile Training Team (MTT).

9.3.12.2 Request for Training. Activities desiring Tomahawk AUR training provided by SLC DET San Diego shall submit a message request to SLC DET San Diego, CA with information copy to PEOSTRKWPNSUAVN Patuxent River, MD//PMA-280731//. Request should state desired Course Number, Course Title, Primary Date, Secondary Date, Number of Personnel (Military and/or civilian), and if course is desired to be taught on-site.

9.3.12.3 Training Periodicity. TWS AUR support IMAs periodicity requirements are listed in Figure 9-3-2. Training intervals vary depending on activity, location and personnel requirements. Activities that have military personnel will receive training at shorter intervals due to crew rotation. Activities performing more frequent Tomahawk operations, and having a relatively stable workforce will be inspected at a lengthier interval. A site can request additional training visits outside the recommended interval to maintain Tomahawk proficiency. The ISEAs can also recommend additional Training/LOGEVAL support based on feedback from site visits.

9.3.12.4 Tomahawk Interactive Courseware. Tomahawk ICW provides support activity personnel refresher training on all aspects of the Tomahawk AUR logistics support, including loading and handling, trans-shipment, maintenance, and employment. There are currently 16 submarine content and 3 surface content ICWs hosted by Navy E-Learning on the NKO portal. Navy E-Learning tracks course enrollment and completion for active duty Sailors and Department of the Navy civilians enrolled in the Defense Enrollment Eligibility Reporting System (DEERS) and supports the Navy's 5 Vector Model. To access the NKO website and Navy E-Learning for a complete listing of Tomahawk AUR courses, log on to https://wwwa.nko.navy.mil.

CHAPTER 9.4

Organizational Level Maintenance

Table of Contents

Paragraph	Subject	Page
9.4.1	General	9-4-1
9.4.2	Organizational Level (O-level) Maintenance	9-4-1
9.4.3	Missile Receipt and Inspection	9-4-1
9.4.4	Missile Preparation for Loading	9-4-1
9.4.5	Missile Loading	9-4-1
9.4.6	Postload Testing	9-4-2
9.4.7	Missile Downloading	9-4-2
9.4.8	Deficiency Reporting	9-4-2
9.4.9	Technical Bulletin	9-4-2
9.4.10	Logbook Maintenance	9-4-2

CHAPTER 9.4

Organizational Level Maintenance

9.4.1 General. This chapter describes the surface launched missile maintenance actions authorized to be performed by Navy ships. Organizational level maintenance directly supports and maintains the weapons system, which consists of the launcher, surface missile, and associated interface items.

9.4.2 Organizational Level (O-level) Maintenance. Surface launched missiles O-level maintenance is that maintenance which is performed by Navy shipboard personnel on a day-to-day basis in support of its operations. All maintenance actions are performed in accordance with approved Commander, Naval Sea Systems Command (COMNAVSEASYSCOM) technical manuals, Maintenance Requirement Cards (MRCs), and checklists that have been developed for each missile system and launch platform.

9.4.3 Missile Receipt and Inspection. O-level personnel inspect each missile prior to loading to ensure integrity. Missiles are inspected for dents, cracks, proper mating, and security of the assembly. Launcher interface connectors must be inspected to ensure that the connectors have dust covers and are clean and undamaged. Missiles that do not meet inspection criteria should be rejected and the supporting Intermediate Maintenance Activity (IMA) notified.

9.4.3.1 Missile Sentencing Inspection (MSI). An MSI is a visual external examination (screening) of the shipping container when a transfer of assets is accomplished. An MSI can be performed in operation buildings, segregation facilities, waterfront piers, or in any approved inspection area permitted by NAVSEA OP 5 and NAVSEA SW020-AC-SAF-010. MSI procedures have been developed for each individual missile series and are contained in the NAVSUP P-805/807.

9.4.3.2 Missile Reissue Inspection (MRI). The MRI is designed to take maximum advantage of surface launched missile Re-certification Due Dates (RDD). The RDD is the date a surface launched missile or component must be returned to the Depot for testing. The RDD is established by adding Serviceable In-Service Time (SIST) to the latest test date, but may not exceed the date that an internal component's service life will expire. The SIST is that period of time a surface launched missile may remain in operational use and/or storage before its internal electronic or mechanical components require a test or maintenance action to validate suitability for operational use. The SIST clock starts with the Date of the Last Test (DOLT) performed by an authorized activity. Service life is the period of time a missile explosive component may remain in operational use and/or storage. The service life starts with the date of manufacture. Missiles failing the MRI are returned for required repair actions before reissue.

9.4.4 Missile Preparation for Loading. After receiving the missile and ensuring proper operational configuration, the missile is prepared for loading. Procedures vary depending on the system to be loaded. Specific procedural responsibilities are outlined in the applicable authorized MRCs.

9.4.5 Missile Loading. During missile loading, O-level personnel install weapons in the launcher. Loading evolutions are performed by designated load team personnel in accordance

with appropriate MRCs. Refer to the applicable missile system MRC for specific loading procedural requirements.

9.4.6 Postload Testing. A qualified O-level operator performs an inventory status test after loading to ensure proper interface between the launcher and the missile. Missile-in-launcher tests are performed to improve confidence that the weapon, as well as the launch platform, will function properly. Procedures for testing are contained in the applicable authorized weapon system manual.

9.4.7 Missile Downloading. Downloading is the process of removing unexpended missiles and any residual hardware resulting from a missile expenditure from the launcher. It is conducted in accordance with applicable MRCs, technical manuals, and checklists.

9.4.8 Deficiency Reporting. Deficiency reports are initiated at the O-level when a deficiency is discovered during the performance of any of the assigned O-level maintenance actions. Deficiency reporting procedures are contained in Volume I, Chapter 4.6 of this manual.

9.4.9 Technical Bulletin. O-level personnel are responsible for assuring that Notice of Ammunition Reclassifications (NARs) and technical bulletins addressing weapons systems are complied with.

9.4.10 Logbook Maintenance. To facilitate missile logbook maintenance, O-level personnel are responsible for providing complete and concise missile information, such as launcher/cell loading location, condition code, noted damage to the missile, missile failure, expenditure, etc. and provide completed copies as described within the weapons system's logbook.

CHAPTER 9.5

Intermediate Level Maintenance

Table of Contents

Paragraph	Subject	Page
9.5.1	General	9-5-1
9.5.2	Intermediate Level (I-level) Maintenance Responsibilities	9-5-1
9.5.3	Missile Receipt and Inspection	9-5-2
9.5.4	Deficiency Reporting	9-5-2
9.5.5	Repackaging	9-5-3
9.5.6	Crossdecking Requirements	9-5-3
9.5.7	Re-certification and Repair	9-5-3

CHAPTER 9.5

Intermediate Level Maintenance

9.5.1 General. This chapter describes the surface launched missile maintenance actions assigned to Naval Weapon Stations, NMC Detachments and Shipboard Weapons Departments. Intermediate level (I-level) maintenance enhances and sustains the combat readiness and mission capability of supported activities by providing quality and timely missile support at the closest location with the lowest practical expenditure.

9.5.2 Intermediate Level (I-level) Maintenance Responsibilities. Surface launched missile maintenance may be assigned to the I-level. All maintenance actions are to be performed in accordance with approved technical manuals including the NAVSUP P-805/807, system specific manuals, and Standard Operating Procedures (SOPs), which have been developed for each surface launched missile system.

9.5.2.1 Receipt, Segregation, Storage, and Issue (RSSI). RSSI actions required to support maintenance of surface launched missiles processing is accomplished in accordance with NAVSUP P-805/807. Inspections are conducted on all surface launched missile containers received. Containers are inspected for proper marking and tagging and any possible damage. If container is dented, crushed, punctured, or otherwise damaged, the proper authority shall be notified for appropriate deficiency reporting and disposition instructions.

9.5.2.2 Storage and Handling. I-level maintenance is responsible for surface launched missile storage, which includes deep stowage and ready service storage of surface launched missiles issued to the Organizational level to satisfy operational requirements. All handling, storing and transporting will be performed utilizing authorized equipment.

9.5.2.3 Cleaning. Cleaning consists of the removal of contaminants such as dirt, grease, salt spray, oil and other elements that aid corrosion. Cleaning requires a knowledge of the materials and methods needed to remove each of these contaminants. As a general rule, the mildest cleaning method available that will work effectively is used.

9.5.2.4 Preservation and Painting. Some surface launched missiles are subject to preservation and painting procedures as part of I-level maintenance. I-level maintenance personnel clean all surfaces before applying the coating, ensuring that no cleaning material residue is trapped in fasteners, points, etc. These areas can become contaminated and corrosion will occur. While materials such as oils and sealants act as a preservative, painting is generally the most effective means of preserving metal. Painting is limited to a maximum of 25 percent of any section or component. Painting requirements that exceed this criteria must be performed at the Depot level in an authorized painting area.

9.5.2.5 Assembly and Test. Under the All-Up-Round (AUR) concept, surface launched missile assembly and testing is not normally performed by I-level maintenance activities.

9.5.2.6 Logbook Maintenance. To facilitate missile logbook maintenance, I-level personnel are responsible for providing complete and concise missile information, such as condition code, noted damage to the missile, missile failure, etc. and provide completed copies as described within the weapon system's logbook (see Figure 9-2-3 of this section for a sample logbook).

9.5.2.6.1 Logbook Repository. The Naval Surface Warfare Center (NSWC), Corona, CA has been designated as the repository for all surface launched missile logbook information. Permanent files are periodically updated by maintenance data system input and are kept on each surface launched missile. Activities that receive incomplete or missing surface missile logbooks and records, should contact the NSWC, Corona, CA for a current copy of the logbook. Missing missile logbooks can be obtained by downloading them directly from a website by personnel with approved access for their type/model/series missile.

9.5.2.7 Shipping. Prior to shipment, surface launched missiles and their associated hardware (including logbooks) are packaged in accordance with the applicable authorized technical manual. Containers are sealed, marked, and tagged. All missile transactions and status changes are reported and tracked through Ordnance Information System (OIS).

9.5.2.8 Technical Directives (TDs). I-level ordnance personnel are responsible for assuring that TDs such as Notices of Ammunition Reclassifications (NARs) directed to that level are complied with.

9.5.3 Missile Receipt and Inspection. I-level personnel inspect surface launched missiles and containers for dents, cracks, humidity level, Re-certification Due Dates (RDD), etc. Missiles that do not meet inspection criteria should be repaired or rejected if Beyond Capable Maintenance (BCM) for the Intermediate Maintenance Activity (IMA) and the appropriate personnel notified.

9.5.3.1 Missile Sentencing Inspection (MSI). An MSI is a visual external examination (screening) of the shipping container when a transfer of assets is accomplished. An MSI can be performed in operation buildings, segregation facilities, waterfront piers, or in any approved inspection area permitted by NAVSEA OP 5 and NAVSEA SW020-AC-SAF-010. MSI procedures have been developed for each individual missile series and are contained in the NAVSUP P-805/807.

9.5.3.2 Missile Reissue Inspection (MRI). The MRI is designed to take maximum advantage of surface launched missile RDD. The RDD is the date a surface launched missile or component must be returned to the Depot for testing. The RDD is established by adding Serviceable In-Service Time (SIST) to the latest test date, but may not exceed the date that an internal component's service life will expire. The SIST is that period of time a surface launched missile may remain in operational use and/or storage before its internal electronic or mechanical components require a test or maintenance action to validate suitability for operational use. The SIST clock starts with the Date of the Last Test (DOLT) performed by an authorized activity. Service life is the period of time a missile explosive component may remain in operational use and/or storage. The service life starts with the date of manufacture. Missiles failing the MRI are returned for required repair actions before reissue.

9.5.4 Deficiency Reporting. Deficiency reports are initiated at the I-level when a deficiency is discovered during the performance of any of the assigned I-level maintenance actions. Deficiency reporting procedures are contained in Volume I, Chapter 4.6 of this manual.

9.5.5 Repackaging. During the MSI, non-serviceable AUR missiles may be repackaged as necessary to ensure serviceable AUR missiles remain available for issue at the Weapons Station (WPNSTA) level. AUR missiles with the same or similar RDD are containerized together (depending on system) to take maximum advantage of the RDD and to provide for economical management of the workload and assets. The desiccant, humidity indicator, and packaging material are replaced as necessary. Re-stenciling and retagging operations are performed and the assets are then sealed. Repacking operations shall be in accordance with the appropriate technical manuals.

9.5.6 Crossdecking Requirements. Upon completion of the deployment, surface launched missiles which meet the inspection requirements specified for the specific surface launched missile system may be transferred (crossdecked) to the relieving ship when properly directed.

9.5.7 Re-certification and Repair. Upon expiration of the RDD or upon determination that maintenance is beyond the I-level, surface launched missiles must be returned to a depot maintenance activity for repair and re-certification before reissue.

CHAPTER 9.6

Depot Level Maintenance

Table of Contents

Paragraph	Subject	Page
9.6.1	General	9-6-1
9.6.2	Industrial and Depot Level (D-level) Maintenance	9-6-1
9.6.3	Missile Sentencing Inspection (MSI)	9-6-1
9.6.4	Repackaging	9-6-1
9.6.5	Material Received for Further Transfer	9-6-1
9.6.6	Paint Touchup and Cleaning	9-6-2
9.6.7	All-Up-Round (AUR) Missile and Section Testing and Test Equipment Certification	9-6-2
9.6.8	Failure Verification	9-6-2
9.6.9	Removal and Replacement of Missile Sections	9-6-2
9.6.10	Deficiency Reporting	9-6-2
9.6.11	Warranty Actions	9-6-2
9.6.12	Technical Directives (TDs)	9-6-2
9.6.13	Logbook Maintenance	9-6-3
9.6.14	Logbook Repository	9-6-3

CHAPTER 9.6

Depot Level Maintenance

9.6.1 General. This chapter describes the surface launched missile maintenance actions authorized for depots maintenance activities and other industrial level maintenance establishments. Depot level (D-level) maintenance supports weapons and end item systems in a state of operational readiness consistent with the mission requirements of the operating forces at the least total cost. Depot level functions are carried out in industrial establishments through the use of more extensive facilities, skills, and materials or in the field by personnel from such establishments.

9.6.2 Industrial and Depot Level (D-level) Maintenance. D-level maintenance responsibilities assigned to organic depots and commercial contractors include those actions required to maintain or restore the inherent design service levels of performance, reliability, and material condition. D-level maintenance covers the complete rebuilding through reclamation, refurbishment, overhaul, repair, replacement, adjustment, servicing, and replacement of consumables. Depot maintenance actions are performed in accordance with applicable approved technical manuals and Depot Standard Operating Procedures (SOPs). Specific maintenance actions assigned to depots and commercial contractors include the following:

a. All maintenance and modification actions necessary for the rework and repair of the surface launched missile sections and components under their cognizance.

b. The manufacture of items and component parts otherwise not available when that action is deemed necessary and is appropriately authorized.

c. The provision of support services functions, including professional engineering, technology, and calibration services, and field teams to support lower level maintenance when required and directed.

9.6.3 Missile Sentencing Inspection (MSI). The MSI is a visual external examination of palletized All-Up-Round (AUR) missile and components returned to a Depot maintenance activity. The purpose of the missile sentencing inspection is to verify the hardware and condition of the assets received prior to induction into the Depot.

9.6.4 Repackaging. During the missile incoming sentencing inspection, serviceable AUR missiles may be repackaged as necessary to ensure serviceable AUR missiles are returned to the Weapons Station (WPNSTA) level. AUR missiles with the same or similar Recertification Due Dates (RDDs) are containerized together (depending on system) to take maximum advantage of the RDD and to provide for economical management of the workload and assets. The desiccant, humidity indicator, and packaging material are replaced as necessary. Re-stenciling and retagging operations are performed and the assets are then sealed. Repackaging operations shall be in accordance with the appropriate technical manuals.

9.6.5 Material Received for Further Transfer. Containerized AUR surface launched missiles and surface launched missile sections or components, properly stenciled and tagged, sent to a

Depot facility need not be inspected by the Depot except for safety considerations prior to temporary storage. If, during that inspection, it is determined that maintenance actions are required on the container to assure safe and protected transfer of the material, the missile must be repackaged in an authorized, undamaged container in accordance with approved technical manuals.

9.6.6 Paint Touchup and Cleaning.

9.6.6.1 Cleaning consists of the removal of contaminants such as dirt, grease, salt spray, oil, and other elements that aid corrosion. Cleaning requires knowledge of the materials and methods needed to remove each of these contaminants. As a general rule, the mildest cleaning method available that will work effectively is used.

9.6.6.2 Painting at Depot facilities is unlimited. Maintenance personnel will clean all surfaces before applying the paint coating, ensuring that no cleaning material residue is trapped in fasteners, points, etc.; such areas can become contaminated easily and corrosion will occur. While material such as oils and sealants act as a preservative, painting is generally the most effective means of preserving metal.

9.6.7 All-Up-Round (AUR) Missile and Section Testing and Test Equipment Certification. Depot and contractor facilities perform electrical tests on AUR missiles or missile sections and components to verify compliance with test specification parameters. Testing is accomplished on Commander, Naval Sea Systems Command (COMNAVSEASYSCOM) certified surface launched missile test equipment.

9.6.8 Failure Verification. Surface launched missiles that fail electrical test shall be re-checked to verify the indicated failure. Failures will be documented.

9.6.9 Removal and Replacement of Missile Sections. Missile sections or components that are removed from an AUR as a result of inspection, testing, or troubleshooting are replaced by a serviceable section. The faulty section or component is then set aside for further screening pending evaluation of the failure and cost effectiveness of repair. Interchangeability of missile sections or components will be in accordance with the applicable technical manual. When the missile configuration is changed by the addition or deletion of a section or component, the appropriate logbook's maintenance data system configuration summary form must also be annotated. Separate forms apply to each missile system. Figure 9-2-3 in this section shows a sample logbook containing the configuration summary form.

9.6.10 Deficiency Reporting. Deficiency reports are initiated at the Organizational level when a deficiency is discovered during the performance of any of the assigned Organizational level maintenance actions. Deficiency reporting procedures are contained in Volume I, Chapter 4.6 of this manual.

9.6.11 Warranty Actions. The COMNAVSEASYSCOM warranty program will be discussed later.

9.6.12 Technical Directives (TDs). Depot level personnel are responsible for assuring that TDs such as Notices of Ammunition Reclassifications (NARs) are complied with. They also assist in the development and verification of TDs that ultimately affect them. This assistance includes

engineering change proposal review, development of the resulting TD, and verification prior to implementation of the TD.

9.6.13 Logbook Maintenance. To facilitate missile logbook maintenance, Intermediate level personnel are responsible for providing complete and concise missile information, such as condition code, noted damage to the missile, missile failure, etc. and provide completed copies as described within the weapon system's logbook.

9.6.14 Logbook Repository. The Naval Surface Warfare Center (NSWC), Corona, CA has been designated as the repository for all surface launched missile logbook information. Permanent files are periodically updated by maintenance data system input and are kept on each surface launched missile. Activities that receive incomplete or missing surface missile logbooks and records, should contact the NSWC, Corona, CA for a current copy of the logbook. Missing missile logbooks can be obtained by downloading them directly from a website by personnel with approved access for their type/model/series missile.

SECTION 10

Sub-Surfaced Launched Ordnance

Table of Contents

Chapter	Subject	Page
10.1	Torpedoes	10-1-1

CHAPTER 10.1

Torpedoes

Table of Contents

Paragraph	Subject	Page
10.1.1	Lightweight Torpedoes (LWT)	10-1-1
10.1.2	Heavyweight Torpedoes (HWT)	10-1-2
10.1.3	Targets	10-1-3

CHAPTER 10.1

Torpedoes

10.1.1 Lightweight Torpedoes (LWT).

10.1.1.1 MK 46 Torpedo. Introduced in 1965, the MK 46 LWT has been the mainstay of the Navy's lightweight Anti-Submarine Warfare (ASW) torpedo inventory. It is currently programmed to remain in service until 2025. The MK 46 torpedo was designed to attack high performance submarines and is currently identified as the North Atlantic Treaty Organization (NATO) standard for LWT ASW and has been acquired by more than 25 countries. Various modifications including improved acoustics, guidance and control upgrades, and countermeasure detection capability have been introduced into the weapon since inception. In the early 1990s, a major system upgrade was developed to improve weapon performance in shallow water. The variant took the identification of MK 46 MOD 5A(S). The MOD 5A(S) variant is an active or passive/active, dual-speed torpedo ASW weapon for surface ships, fixed wing, and rotary wing aircraft. Another performance improvement program was undertaken in 1996 which produced the variant identified as the MK 46 MOD 5A(SW) torpedo. The MK 46 MOD 5A(SW) upgrade improves the torpedo's Counter-Countermeasure (CCM) performance, enhanced target acquisition, established a bottom-avoidance preset, and also incorporated maintainability and reliability upgrades. The current plan of record for the MK 46 torpedo is to remove them all from the U.S. LWT inventory as they come due for maintenance, and replace them with new production MK 54 torpedoes.

10.1.1.2 MK 50 Torpedo. The MK 50 torpedo is a highly capable undersea weapon for U.S. Navy surface ships, fixed winged, and rotary winged aircraft. It was first authorized for Fleet use in October 1992 and designed to counter the fast, deep diving, double hulled Soviet nuclear submarine threat. Relative to the MK 46, the MK 50 has increased range, more sophisticated CCM logic, greater lethality, speed and depth, and superior endurance. Major technological advances include a Stored Chemical Energy Propulsion System (SCEPS), utilizing a Lithium Boiler, with advanced tactics and signal processing which are software driven. A MK 50 software block upgrade program was conducted in the mid-1990s to enhance the MK 50s performance in shallow water. A new variant was introduced to the Fleet in 1996 and was identified as the MK 50 Block Upgrade I. In 2002, the final upgrade was introduced which improved the reliability to the SCEPS. Due to the high cost and its use in the development of the MK 54 LWT, the MK 50 torpedo will be removed from the Fleet inventory as required until fully depleted from the U.S. LWT inventory in 2014.

10.1.1.3 MK 54 Torpedo. The MK 54 LWT is designed specifically for optimal performance against advanced, quiet, diesel/electric submarines operating in either littoral or deep waters. Previously known as the Lightweight Hybrid Torpedo (LHT), and now designated the MK 54 MOD 0, the design integrates existing torpedo hardware with state-of-the-art Commercial-Off-the-Shelf (COTS) digital signal-processing technology and an open architecture design philosophy. The concept marries the dependability and affordability of the MK 46 with the superior performance of the MK 50 and MK 48 MOD 6 Advanced Capability (ADCAP) Heavyweight

Torpedoes (HWT). The design consists of the MK 50 sonar, a COTS Guidance and Control (G&C) assembly, the MK 46 warhead and propulsion system, and advanced software algorithms developed for the MK 50 and heavyweight ADCAP torpedo programs. The extensive use of non-developmental items enables the Undersea Weapons Program to deliver a highly capable weapon with significantly reduced total ownership cost. With its proven propulsion system, the torpedo is simple and relatively inexpensive to overhaul, resulting in lifecycle and turnaround costs significantly lower than those of battery powered torpedoes. The MK 54 is the first all-digital LWT, utilizing COTS technology and open-systems architecture, which enables the MK 54 to be cost effectively upgraded to the latest technology and software to counter evolving threats. The end result is a cost-effective world-class ASW weapon capable of countering today's and tomorrow's challenging littoral threat. The MK 54 began entering the Fleet LWT inventory in significant numbers in 2010 and will replace all MK 46 and MK 50 LWTs as new production units are delivered.

10.1.1.4 Vertical Launch Anti-Submarine Rocket (ASROC). The Vertical Launch ASROC (VLA) is a missile designed to deliver the MK 46 and MK 54 LWTs to a water entry point, providing vertical launch capable surface combatants with an all-weather, 360 degree, quick-reaction, anti-submarine standoff weapon capability. VLA includes a solid propellant booster with a Thrust Vector Controller (TVC) to guide the missile from a vertical orientation through a pitch-over maneuver into a ballistic trajectory intended to deliver the torpedo to an aim point on the ocean surface. VLA capability is present on Aegis-class ships (cruisers and destroyers), and Spruance-class destroyers equipped with the MK 41 Vertical Launching System (VLS) and SQQ-89 ASW Combat Systems installed. Originally deployed with the MK 46 MOD 5A(S) LWT, all VLAs have now been upgraded with the MK 46 MOD 5A(SW) and MK 54 LWT.

10.1.2 Heavyweight Torpedoes (HWT).

10.1.2.1 MK 48 Torpedo. The MK 48 HWTs are used solely by submarines and are employed as the primary ASW and Anti-Surface Unit Warfare (ASUW) weapon by attack submarines and as the principal defensive weapon by strategic ballistic-missile submarines. Additionally, the MK 48 torpedo has been acquired by numerous allied countries. With a need to continue improving torpedo performance to counter continuously evolving threats, the Navy developed the MK 48 MOD 5 ADCAP torpedo. The ADCAP torpedo was the replacement for the MK 48 MOD 4 torpedo. Authorized for full production in 1990, the ADCAP counters surface-ship and submarine threats with greater speed and accuracy than any other submarine launched torpedo in the U.S. Navy's history. ADCAP is an acoustic-homing torpedo with sophisticated sonar, all-digital G&C systems, digital fuzing systems, and propulsion improvements over previous HWT variants. The digital guidance system allows for repeated improvements to counter evolving threats through software upgrades. To improve performance, several upgrades have been made to the ADCAP inventory since inception:

a. MODs ADCAP (MK 48 MOD 6): The MODs ADCAP combined two improvements; one in the G&C section and the other in the Torpedo Propulsion Unit (TPU). The G&C MOD improved the acoustic receiver, replaced the G&C section with updated technology, increased memory, and improved the processor throughput to handle expanding software demands required to improve torpedo performance against evolving threats. The TPU MOD provided a tactically significant reduction in torpedo radiated noise signatures.

b. Operational Software Upgrades: Software upgrades have been and will be developed and integrated into the ADCAP. Changes in threat scenarios, such as the inclusion of littoral operating areas, the increased availability of modern countermeasures, and the proliferation of diesel submarines are the major impetus for updating the ADCAP software.

(1) Performance issues, including deficiencies discovered during Fleet exercises and developmental testing, also were resolved during these updates. The torpedo Advanced Processing Build (APB) process identifies, selects, and matures torpedo performance upgrades.

c. Common Broadband Advanced Sonar System (CBASS) MK 48 MOD 7: The CBASS program is a significant hardware and software upgrade to the MODS ADCAP torpedo. The CBASS program is a joint development program with the Royal Australian Navy (RAN) who has become a full partner with the U.S. Navy in CBASS development.

d. CBASS incorporates a new broadband sonar system (and its associated software) to achieve significant increases in operating bandwidth. The system includes new broadband processing algorithms that improve CCM identification and shallow water torpedo performance while retaining deep water performance characteristics.

10.1.3 Targets. ASW training target systems are specialized unmanned undersea vehicles that provide a cost effective ASW training alternative for Navy platforms (surface ships, submarines and aircraft) by simulating the dynamic, acoustic and magnetic signatures of submarines and act as targets for ASW sensors and torpedoes to detect, classify, track and engage in realistic operational training environments on instrumented ranges and open ocean operations. The three target systems presently in the U.S. Navy inventory include the MK 30 MOD 1, MK 30 MOD 2 and the MK 39 Expendable Mobile ASW Training Target (EMATT) MODs 1, 1A and 2.

10.1.3.1 MK 30 MOD 1. The MK 30 MOD 1 is a torpedo-like unmanned undersea vehicle used for Fleet ASW training on all U.S. Navy instrumented Undersea Tracking Ranges (UTRs) and more recently being utilized during open ocean exercises off the coast of Hawaii and in the Western Pacific Operational Area (WESTPAC). There are a total of 56 operational MK 30 MOD 1 targets. The MK 30 MOD 1 has been the primary Fleet ASW training target for over 30 years, successfully supporting over 25,000 missions. The MK 30 MOD 1 is no longer in production.

10.1.3.2 MK 30 MOD 2. The MK 30 MOD 2 is a torpedo-like unmanned undersea vehicle originally intended to replace a MK 30 MOD 1 declining inventory at all U.S. Navy instrumented undersea tracking ranges while increasing reliability and availability, lowering maintainability and life cycle operational costs and incorporating performance enhancements to meet emerging Fleet ASW training requirements. Eleven MK 30 MOD 2 targets were produced and are operational at the Pacific Missile Range Facility in Kauai, Hawaii. The MK 30 MOD 2 is not presently in production.

10.1.3.3 EMATT. The MK 39 EMATT is an expendable sonobuoy sized Fleet ASW training target used for ASW training for deployed forces with a back-up role to MK 30 MOD 1 and MK 30 MOD 2 training targets on all U.S. Navy instrumented undersea tracking ranges. The MK 39 EMATT MOD 2 is the present configuration and is in production. More than 700 targets are expended per year for training.

SECTION 11

Mines and Mine Systems

Table of Contents

Chapter	Subject	Page
11.1	Current U.S. Naval Mine Inventory	11-1-1
11.2	SEAFOX	11-2-1
11.3	Rapid Airborne Mine Clearance System (RAMICS)	11-3-1

CHAPTER 11.1

Current U.S. Naval Mine Inventory

Table of Contents

Paragraph	Subject	Page
11.1.1	Introduction	11-1-1
11.1.2	MK 6 Mechanical Sweep Mines	11-1-1
11.1.3	MK 25 Hunting Mine	11-1-1
11.1.4	MK 36 Hunting Mine	11-1-1
11.1.5	MK 52 Mines	11-1-2
11.1.6	MK 55 Hunting Mine	11-1-2
11.1.7	MK 56 Mines	11-1-3
11.1.8	MK 62 Quickstrike (QS) Mines	11-1-3
11.1.9	MK 63 Quickstrike (QS) Mines	11-1-4
11.1.10	MK 65 Quickstrike (QS) Mines	11-1-4
11.1.11	MK 67 Submarine Launched Mobile Mine (SLMM)	11-1-5
11.1.12	MK 74 Versatile Exercise Mine (VEM)	11-1-6
11.1.13	MK 75 Versatile Exercise Mine	11-1-6

CHAPTER 11.1

Current U.S. Naval Mine Inventory

11.1.1 Introduction. The mines below represent the current inventory of mines that the U.S. Navy deploys in the water for either Service or Exercise and Training (E&T) requirements. This section provides details for each mine such as use, delivery method, components, color, weight, accessories, explosive mixture (Service mines only), and target detection capabilities where appropriate.

11.1.2 MK 6 Mechanical Sweep Mines. They are surface-launched inert E&T shapes of their obsolete service mine counterparts. They are designed solely for training personnel in the techniques of mine countermeasures (moored mine neutralization).

11.1.2.1 The MK 6 Mine consists of an 800-pound anchor connected by a mooring cable to a buoyant 500-pound mine case. The spherical mine case is inert-loaded. The extender and firing mechanism wells are empty and closed with watertight shipping covers. Four H-plugs are used to seal the horn holes in the mine case. The mine case is painted either white with orange stripes or orange with white stripes. The anchor is painted black.

11.1.2.2 There are three Operational Assemblies (OAs) for the MK 6 Mechanical Sweep Mine. OA-01 is the standard assembly used with the plummet and anchor functioning as designed. OA-02 has been modified by removing the parachute and pulling the cable out of the anchor equal to the desired case mooring depth (plummet not used). OA-03 is the same as OA-02, except that an arming wire is used to initiate case/anchor separation. There are two methods of planting Mechanical Sweep Mines MK 6: OA-01 and OA-02 are planted using launching tracks mounted on the planting vessel, and OA-03 is planted using an over the side crane.

11.1.3 MK 25 Hunting Mine. The MK 25 hunting mine is a recoverable, inert-loaded shape. It is planted in the water by surface craft solely to help mine countermeasures personnel develop their mine hunting skills and techniques.

11.1.3.1 The mine weighs approximately 2,000 pounds with its tail cover. The flight gear is omitted when the mine is surface planted. The mine does not contain explosives or target detecting/actuating mechanisms and, therefore, is ballasted internally with concrete to maintain its necessary negative buoyancy and bottom stability. The mine's case is painted either white with orange stripes or orange with white stripes.

11.1.4 MK 36 Hunting Mine. The MK 36 hunting mine is a recoverable, inert-loaded shape that is also planted by surface craft solely to help mine countermeasures personnel develop their mine hunting skills and techniques. In many ways, it is simply a smaller version of the Mine MK 25.

11.1.4.1 The mine weighs approximately 1,000 pounds with its tail cover. The flight gear is omitted when the mine is surface planted. The mine does not contain explosives or target detecting/actuating mechanisms and, therefore, is ballasted internally with concrete to maintain

its necessary negative buoyancy and bottom stability. The mine's case is painted either white with orange stripes or orange with white stripes.

11.1.5 MK 52 Mines.

11.1.5.1 MK 52 Laying Mine. The MK 52 laying mine is a recoverable, inert-loaded mine. It is designed solely for training aviation personnel flying B-52H Stratofortress, P-3C Orion, or F/A-18A/D Hornet aircraft in the techniques of carrying mines and planting minefields. The mine weighs approximately 1,000 pounds, consisting of a ballasted mine case, tail cover, and flight gear. Three options are available for tail cover use: the standard tail cover may be used with or without a float, or a modified tail cover designed for Marine Mammal System (MMS) MK 5 (sea lion) recovery may be used. The modified tail cover does not use a float. The mine's case is painted either white with orange stripes or orange with white stripes. Three OAs exist for the Laying Mine MK 52. For OA-03K, Fin MK 10 is fitted. OA-04K calls for a Fin MK 20. Finally, OA-05K requires a Fairing, Nose and Tail MK 19. For all three of these OAs, a Parachute Pack MK 35 is also used.

11.1.5.2 MK 52 Hunting Mine. The MK 52 hunting mine is also a recoverable, inert-loaded mine that is planted by surface craft. It is planted solely to help mine countermeasures personnel develop their mine hunting skills and techniques. The mine's flight gear is not used for surface planting. This mine also weighs approximately 1,000 pounds, consisting of a ballasted mine case and tail cover. Two options are available for tail cover use: the standard tail cover may be used, or a modified tail cover designed for MMS MK 5 recovery may be utilized. The modified tail cover does not use a float. The mine's case is painted either white with orange stripes or orange with white stripes.

11.1.5.3 MK 52 Actuation Mine. The MK 52 actuation mine is a recoverable, inert-loaded mine. It is normally planted by B-52H Stratofortress, P-3C Orion, or F/A-18A/D Hornet aircraft, but may also be planted minus its flight gear from surface craft. It is planted to help mine countermeasures personnel develop their mine sweeping skills and techniques. If air delivered, it also serves to enhance aircrew proficiency in carrying mines and planting minefields at sea. The mine weighs approximately 1,000 pounds, consisting of a mine case, instrument rack, tail cover, pyrotechnic (colored smoke) signal and a float inside a drill section, and flight gear (only if air delivered). It does not contain explosives and is ballasted with concrete to maintain its necessary negative buoyancy. The mine does contain magnetic (MOD 2) or acoustic/magnetic (MOD 5) firing mechanisms that, instead of exploding the mine, operates a pyrotechnic signal which surfaces to provide a visual indication of mine actuation. A search coil inside the mine's case senses magnetic stimuli, while a hydrophone (MOD 5 only) responds to acoustic signals. After a preset time, the float is freed to rise to the water's surface. This float pays out a 200-foot recovery line that is secured to the mine case, enabling mine recovery by surface craft without the use of divers. The float will operate in this delayed manner whether or not mine actuation (pyrotechnic signal release) has occurred. The mine's case is painted either white with orange stripes or orange with white stripes. Three OAs exist for the Actuation Mine MK 52. For OA-03B, Fin MK 10 or 20 is fitted. OA-06B calls for a Fairing, Nose and Tail MK 19. For both of these air-delivered OAs, a Parachute Pack MK 35 is also used. OA-05E is assembled minus any sort of flight gear for surface planting.

11.1.6 MK 55 Hunting Mine. The MK 55 hunting mine is a recoverable, inert-loaded shape planted by surface craft. It is planted solely to help mine countermeasures personnel develop

their mine hunting skills and techniques. The mine weighs approximately 2,000 pounds, consisting of a mine case and tail cover (flight gear is omitted). The mine does not contain explosives or target detecting/actuating mechanisms and, therefore, is ballasted with concrete to maintain its necessary negative buoyancy. Two options are available for tail cover use: the standard tail cover may be used, or a modified tail cover designed for MMS MK 5 recovery may be used. The mine's case is painted either white with orange stripes or orange with white stripes.

11.1.7 MK 56 Mines.

11.1.7.1 MK 56 Service Mine. The MK 56 service mine is an explosive-loaded (HBX-3 fill) moored mine operationally planted by personnel flying B-52H Stratofortress, F/A-18A/D Hornet, and P-3C Orion aircraft. This 2,000-pound mine consists of an anchor, mechanism section, explosive section, and flight gear. Although intended primarily as an anti-submarine weapon, it can also be used effectively against surface craft. The mine employs a magnetic firing mechanism, which uses a total-field magnetometer as its influence detector. Unlike earlier search coils which responded to changes in only one component of a ship's magnetic field, the Mine MK 56's magnetometer responds to changes in magnitude of the total background field. The mechanism/explosive sections are painted brick red and the anchor is painted black. Six OAs exist for the Service Mine MK 56: OA-05, -06, -09, -10, -11, and -12. Minefield planners use these OAs to provide the characteristics necessary to meet a specific operational requirement such as the need to employ a particular flight gear option, the need for a special auxiliary device such as the gas generator used to free the mine from mud, etc. The possible assembly variations are too numerous to mention here.

11.1.7.2 MK 56 Laying Mine. The MK 56 laying mine is a recoverable, inert-loaded mine identical in size and weight to its Service mine counterpart. It is designed solely for training aviation personnel flying the same airborne platforms identified above in the techniques of carrying mines and planting minefields. This mine consists of a non-functional anchor since it does not separate and moor the mine's mechanism section. It also has an inert-loaded explosive section, an arming device simulator, and functional flight gear. For MMS MK 5 recovery, a marine mammal recovery attachment is installed on the arming device simulator. The mechanism and inert-loaded explosive sections are painted either white with orange stripes or orange with white stripes and the anchor remains black. Two OAs (-05K and -06K) exist for the Laying Mine MK 56. They differ only in that OA-06K calls for the installation of a Fairing MK 21 consisting of an aerodynamic nose and nose piece.

11.1.8 MK 62 Quickstrike (QS) Mines.

11.1.8.1 MK 62 QS Service Mine. The MK 62 QS Service Mine is an explosive-loaded (H-6 fill) bottom mine operationally planted by personnel flying B-52H Stratofortress, F/A-18A/D Hornet, B-1B Lancer, B-2A Spirit, or P-3C Orion aircraft. This mine is currently being flight tested on the F/A-18E/F Super Hornet with carriage approval expected in the near future. This 500-pound mine consists of a thick-walled General Purpose (GP) Bomb MK 82 incorporating an Arming Device MK 32, and a Fin MK 15, Fin BSU-86/B or A/B, or Tail Section MK 16. The mine uses a Target Detection Device (TDD) MK 57 (magnetic and seismic sensors) to detect stimuli generated by enemy vessels. The mine case is either painted olive drab or coated with a gray thermal coating. Six OAs exist for the QS Service Mine MK 62. For OAs 02 and

03, a Fin MK 15 is fitted. A Fin BSU-86/B or A/B is used for OA-09. A Tail Section MK 16 is used for OA-06 (F/A-18), OA-12 (B-1B), or OA-13 (B-2A).

11.1.8.2 MK 62 QS Laying Mine. The MK 62 QS Laying Mine is a recoverable, inert-loaded mine identical in size and weight to its Service mine counterpart. It is designed solely for training aviation personnel flying the same airborne platforms identified above in the techniques of carrying mines and planting minefields. This mine consists of an inert-loaded GP Bomb MK 82 incorporating an inert loaded Arming Device MK 32 and an operational Fin MK 15, Fin BSU-86/B, or Tail Section MK 16. For MMS MK 5 recovery with either fin, a marine mammal recovery attachment and spacer is installed in the rear fuze well. For Tail Sections MK 16, a special grabber mechanism mates with one of the tail's access holes when MMS MK 5 recovery is used. The mine case is painted either white with orange stripes or orange with white stripes. Six OAs exist for the QS Laying Mine MK 62. For OAs 02K and 03K, a Fin MK 15 is fitted. A Fin BSU-86/B or A/B is used for OA-09K. A Tail Section MK 16 is used for OA-06K (F/A-18), OA 12K (B-1B), or OA-13K (B-2A).

11.1.9 MK 63 Quickstrike (QS) Mines.

11.1.9.1 MK 63 QS Service Mine. The MK 63 QS Service Mine is an explosive-loaded (H-6 fill) bottom mine operationally planted by personnel flying B-52H Stratofortress, F/A-18A/D Hornet, or P-3C Orion aircraft. This mine is currently being flight tested on the F/A-18E/F Super Hornet with carriage approval expected in the near future. This 1,000-pound mine consists of a thick-walled GP Bomb MK 83 incorporating an Arming Device MK 32 and a Fin MAU-91A/B with an Adapter ADU-320A/B or Tail Section MK 12. The mine uses a TDD MK 57 (magnetic and seismic sensors) to detect stimuli generated by enemy vessels. The mine case is either painted olive drab or coated with a gray thermal coating. Three OAs exist for the QS Service Mine MK 63. For OAs 02 and 03, a Fin MAU-91A/B is fitted. A Tail Section MK 12 is used for OA-06.

11.1.9.2 MK 63 QS Laying Mine. The MK 63 QS Laying Mine is a recoverable, inert-loaded mine identical in size and weight to its service mine counterpart. It is designed solely for training aviation personnel flying the same airborne platforms identified above in the techniques of carrying mines and planting minefields. This mine consists of an inert loaded GP Bomb MK 83 incorporating an inert loaded Arming Device MK 32 and an operational Fin MAU 91A/B with an Adapter ADU-320A/B or Tail Section MK 12. For MMS MK 5 recovery with a fin, a marine mammal recovery attachment and spacer is installed in the rear fuze well. For MMS MK 5 recovery with a tail, the tail is fitted with two steel bail weldments (inside and across the tail's two access holes) painted white. The mine case is painted either white with orange stripes or orange with white stripes. Four OAs exist for the QS Laying Mine MK 63. For OAs 02K and 03K, a Fin MAU-91A/B with an Adapter ADU-320A/B is fitted. A Tail Section MK 12 is used for OA-06K. Finally, OA-06KQ signifies a Tail Section MK 12 fitted with the two bail weldments.

11.1.10 MK 65 Quickstrike (QS) Mines.

11.1.10.1 MK 65 QS Service Mine. The MK 65 QS Service Mine is an explosive-loaded mine for operational planting by aviation personnel flying B-52H Stratofortress, F/A-18A/D Hornet, B-1B Lancer, and P-3C Orion aircraft. This mine is currently being flight tested on the F/A-18E/F Super Hornet with carriage approval expected in the near future. It was designed

as a mine from the outset, using a thin-walled mine-type case filled with a PBXN-103 explosive mix vice the thicker bomb-type cases used by QS Mines MK 62 and 63 filled with explosive mix H-6. The mine uses either a TDD MK 57 (magnetic and seismic sensors) or a TDD MK 58 (magnetic, seismic, and pressure sensors A Safety Device, Arming Group (S&A) MK 45 provides for the mine's safety and arming functions) to detect stimuli generated by enemy vessels. This mine weighs approximately 2,260 pounds, consisting of a mine case, nose fairing, and a Tail Section MK 7. Its case is a steel cylinder 93 inches long and 21 inches in diameter at its largest point. A 16-inch portion of the aft end of the case tapers from 21 inches to 17.5 inches in diameter, at which point the tail is attached. The mine's case is painted olive drab.

11.1.10.2 MK 65 QS Laying Mine. The MK 65 QS Laying Mine is a recoverable, inert-loaded mine identical in size and weight to its Service mine counterpart. It is designed solely for training aviation personnel flying the same airborne platforms identified above for the Service mine variant. The mine consists of a mine case, nose fairing, and an operational Tail Section MK 7. The mine case is painted either white with orange stripes or orange with white stripes to enhance its visibility in the water and to help expedite recovery efforts. Although this mine contains no explosives and does not explode as do Service mines, the Tail Section MK 7 contains a low-level explosive device that is used to deploy the parachute once the mine is released from the aircraft. After release from the aircraft, impact with the water shears off the tail which uncovers a float assembly housed in the rear of the mine case. This float rises to the water's surface to mark the mine's underwater location.

11.1.11 MK 67 Submarine Launched Mobile Mine (SLMM). A MK 67 SLMM weighs approximately 1,790 pounds and is launched from submerged submarines. The SLMM propels itself to the planting site where it shuts down and plants itself until detonation or recovery. Approximately 20 seconds after the end of the run, all propulsion and control functions are shut down and the fuze ejector disconnects the main motor fuze disconnect. This action prevents the motor from restarting after planting. The Service SLMM is a self-propelled bottom mine with a capability that permits it to be covertly placed in a predetermined bottom planting location. It uses TDD MK 57 that utilizes magnetic and seismic sensors to detect stimuli generated by enemy vessels. The SLMM's purpose is to restrict ship and submarine traffic in an operational role. The Service SLMM employs a modified Torpedo MK 37 as the propulsion vehicle, designated the Body, Mine Main Assembly MK 4. Forward of this main body is the Explosive Section MK 13/Nose Section Subassembly (Loaded) which contains the PBXN 103 explosive mixture, Exploder Mechanism MK 19, Arming Device MK 2, and TDD MK 57 with its Battery MK 131. The Body, Mine Main Assembly MK 4 is painted green, while the Explosive Section MK 13 retains its cold galvanized finish. The Laying SLMM is used to provide a means for submarine personnel to develop the proficiency required to plant the mine in a minefield. The Laying SLMM also uses the Body, Mine Main Assembly MK 4 for propulsion, modified so it does not flood at end of run and so the energized training battery does not run the propulsion motor when first mated to the main body. The SLMM training "nose" depends on the OA it is to be configured in:

a. OA-05 consists of an Inert Loaded Explosive Section MK 13/Nose Section Subassembly. The inert fill material is used in this section to simulate the weight and center of gravity of its explosive counterpart. A weight simulator is also used in place of the TDD.

b. OA-06 consists of an Exercise Head Assembly MK 91/Nose Section Subassembly that contains an anchor, weight simulator, Control Box MK 59, Gel-Cell Battery MK 140, Float/Flare Launcher MK 27, and Signal MK 115/116 (optional, not used in several years).

The Body, Mine Main Assembly MK 4 is painted green, while the Inert Loaded Explosive Section MK 13 or Exercise Head Assembly MK 91 is painted either white with orange stripes or orange with white stripes.

11.1.12 MK 74 Versatile Exercise Mine (VEM). The MK 74 VEM is a specially constructed interactive mine simulator training device that represents a typical bottom mine. Cylindrical in shape, it is 9 feet long, 21 inches in diameter, and weighs a little over 1,200 pounds. It is used to assess the effectiveness of Mine Countermeasures (MCM) operations as well as providing realistic training for MCM forces. The VEM MK 74 is designed to be representative of foreign threat mines and does not possess a U.S. Navy Service mine counterpart. The VEM MK 74 contains multiple sensors and programmable electronics housed in a mine case that presents a realistic sonar profile of a bottom mine. Each VEM MK 74 can be programmed to emulate the target detection capabilities of various known bottom mines by emulating their mine-fire logic. In addition to emulating the logic, each VEM MK 74 collects data from its sensors and provides it to exercise participants in either real-time or as stored data for later analysis. By exercising against such a device, mine hunting and sweeping forces can obtain a quantitative assessment of their effectiveness and vulnerability. The VEM MK 74 comprises two subassemblies: a 3-foot buoy section is connected in line with a six-foot ballast section. The buoy section is watertight and houses the VEM's sensors and microprocessor-based electronics. The sensors include three passive acoustic sensors located along the buoy section's circumference at the 4, 8, and 12 O'clock positions. A triple-axis magnetometer, a seismic sensor, and a pressure sensor are also permanently installed. The buoy section is painted orange and the ballast section is painted white. Other buoy section components include three active communication transducers interspersed between the passive sensors for the acoustic link. An inclinometer determines the VEM's roll angle on the bottom. A pressure transducer measures the depth and adjusts the communication transducer's output power accordingly. Two depth switches awaken the VEM upon water entry and also activate safety and security features that (1) prevent inadvertent release of the buoy assembly near the surface when an un-separated VEM MK 74 is being recovered, and (2) erase the emulation programming (but not the recorded data) during recovery to prevent unauthorized access to classified mine emulations. The ballast section anchors the VEM MK 74 via a free-flooding case weighted with lead along its bottom to orient the VEM upright as it lands and to stabilize itself on the seabed. A release mechanism in the ballast section uses a cable cutter driven by pressurized air stored in a tank. Upon command via acoustic link or at a preprogrammed time, the cutter severs an internal wire rope, freeing the buoy section to surface.

11.1.13 MK 75 Versatile Exercise Mine. The MK 75 VEM is a specially constructed interactive mine simulator training device that represents a stealth type of shallow water mine. Shaped like a truncated cone, it is 18 inches tall, 38 inches in diameter, and weighs a little over 800 pounds. It is used to assess the effectiveness of MCM operations as well as providing realistic training for MCM forces. The shape, in combination with an anechoic coating, results in a low target strength and a realistically small sonar shadow. The VEM MK 75 is designed to be representative of foreign threat mines and does not possess a U.S. Navy Service mine counter-

part. The VEM MK 75 contains multiple sensors and programmable electronics. Each VEM MK 75 can be programmed to emulate the target detection capabilities of various known bottom mines by emulating their mine-fire logic. In addition to emulating the logic, each VEM MK 75 collects data from its sensors and provides it to exercise participants in either real-time or as stored data for later analysis. By exercising against such a device, mine hunting and sweeping forces can obtain a quantitative assessment of their effectiveness and vulnerability. The VEM MK 75 comprises two subassemblies: a buoy assembly (with the truncated cone shape) sits atop a flat sinker assembly. The buoy assembly is watertight and houses the VEM's sensors and microprocessor-based electronics. Both of these subassemblies are painted orange. The sensors include a passive acoustic sensor located atop the buoy assembly and a triple-axis magnetometer housed within it. Other buoy assembly components include an active communication transducer, also facing upward atop the VEM. An inclinometer determines the VEM's roll angle on the bottom. A pressure transducer measures depth and adjusts the communication transducer's output power accordingly. Two depth switches awaken the VEM upon water entry and also activate safety and security features that (1) prevent inadvertent release of the buoy assembly near the surface when an unseparated VEM MK 75 is being recovered, and (2) erase the emulation programming (but not the recorded data) during recovery to prevent unauthorized access to classified mine emulations. The buoy assembly also houses a pair of spring-loaded release mechanisms. Upon command by acoustic link or at a preprogrammed time, they release their grip on a corresponding pair of sinker assembly attachments, freeing the buoy assembly to surface. The lead-weighted sinker assembly attaches underneath the buoy assembly to orient the VEM MK 75 upright as it lands. It has a flat bottom to stabilize itself on the seabed.

CHAPTER 11.2

SEAFOX

Table of Contents

Paragraph	Subject	Page
11.2.1	Introduction	11-2-1
11.2.2	Maintenance Plan Summary	11-2-2
11.2.3	Training Requirements Identified During Acquisition	11-2-3
11.2.4	Integrated Logistics Support (ILS) Elements	11-2-4

CHAPTER 11.2

SEAFOX

11.2.1 Introduction. The AN/ASQ-232 (SEAFOX) provides neutralization of shallow and deep-water mines including bottom, close-tethered and in-volume mines which have been located by the AN/ASQ-14A sonar detecting set; AN/ASQ-24 detecting set, mine hunting; AN/ASQ-20A, sonar mine detection set and/or other Mine Countermeasures (MCM) assets. The destruction of mines is achieved utilizing a shaped charge warhead integrated into the Destructor, Mine Neutralizer Airborne, EX 62 MOD 0, hereafter referred to as the Expandable Neutralizer. The AN/ASQ-232 consists of the Console/Seat Pallet Assembly, In Water Assembly (IWA), either an Expendable Neutralizer or Destructor, Mine Neutralization Airborne, Training, EX 63 MOD 0, hereafter referred to as the Training Neutralizer, and interconnect cables. The system requires the use of the Airborne Mine Countermeasures (AMCM) Precise Navigation System (PNS); various pieces of Peculiar Support Equipment (PSE); the AMCM Single-Winch II, RMU-38/A, hereafter referred to as the Single Winch II; the Winch Modification Kit (WMK), the Launch Box Assembly (LBA), the Davit/Sheave Assembly (DSA), and the IWA Cradle, all of which are AMCM Mission Interface Removable (MIR).

NOTE

All equipment listed below is considered aircraft equipment with the exception of the Expandable and training Neutralizers which are ordnance equipment.

11.2.1.1 Console/Seat Pallet Assembly. The console/seat pallet assembly consists of the following subassemblies:

a. The Operator Control Console (OCC) Assembly. This is a single bay console that is mounted to the pallet. Four lifting eyes are available for lifting the OCC on and off of the pallet. The OCC receives, processes, records and displays data from and issues command to the Neutralizer. This data is used for directing the Neutralizer to the mine target using the Track Point II Plus (TPII+) Acoustic Tracking System (ATS) and mine hunting sonar. Additionally, the OCC serves as the platform for conducting the OCC POST, OCC Built-In-Test (BIT) and Neutralizer function tests and provides the interface with the MH-53E helicopter and AMCM PNS. The primary components of the OCC are:

(1) The OCC computer system is a Personal Computer (PC) based system, which runs guidance, sonar and server nodes. This system is located in the lower access compartment of the OCC.

(2) The display panel consists of four 10.4-inch, color, Liquid Crystal Display (LCD) screens: the mission display screen, the homing sonar display screen, the touch screen and the camera display screen.

(3) The Operator Control Panel (OCP) is the primary work station used by the operator for complete manual control of Neutralizer heading, depth, pitch and speed control via the

console joystick and individual speed and pitch controls. A power on/off control switch, dimmer control, lamp fault indication panel and mechanically secured Neutralizer fire control (detonation) switch are also mounted on the panel. Additionally, the OCP houses a Remote Access Terminal (RAT) for sonar operation and target designation.

b. The pallet seat assembly includes two operator seats and the operator control console.

11.2.1.2 In Water Assembly. The IWA is cylindrically shaped and has a lift bar on the top midsection, neutralizer motor release assemblies on the bottom forward and aft, a hydrophone, tray assembly, and three fins mounted on the aft section; one starboard, one vertical and one port. The lift bar is the connecting point for the umbilical cable to the MH-53E helicopter. Neutralizer motor release assemblies provide connecting points for suspending the expendable or training neutralizer. The motor release assembly, spool is mounted on the underside of the starboard fin and has a spool clamp subassembly attached to it. The hydrophone and tray assemblies are used for tracking operations from the MH-53E helicopter.

11.2.1.3 Expendable Neutralizer. The expendable neutralizer is a fiber-optic, cable guided, self propelled mine neutralizer used to destroy moored and bottom mines. It incorporates the launch kit, B/C-spool and B-spool cable, sensors for mine relocation and identification, propulsion, and control subsystems and shaped charge warhead. Mines are neutralized using the shaped charge warhead or by punching a hole in the casing of the mine which renders it inoperative. Expendable neutralizers are used for only one mission. After activation of the Safe and Arming Unit (SAU), the warhead arming process is not reversible which prevents safe recovery. If a target is not acquired or the mission is aborted, either warhead sterilization or warhead self-destruction is initiated depending on the stage of the arming sequence.

11.2.1.4 Training Neutralizer. The training neutralizer is a fiber-optic cable guided, self propelled mine neutralizer used for training crews to detect and neutralize moored and bottom mines. It is positively buoyant, recoverable and reusable. The training neutralizer contains a transponder/responder, pressure sensor, compass module, sonar, echo sounder, vertical thrusters, electronic try assembly, battery set, stabilizer fins, A-spool compartment, propulsion assemblies, camera and spotlight assembly, lead ballast (to compensate for the removal of the SAU and warhead), launch kit, B/C-spool and B-spool cable.

11.2.1.5 Interconnecting Cables. The interconnecting cables are used to connect the AN/ASQ-232 subsystems with the MH-53E helicopter.

11.2.2 Maintenance Plan Summary. The maintenance concept for the AN/ASQ-232 utilizes the three levels of maintenance concept as outlined in this Chapter. Maintenance functions for the Neutralizers are currently allocated to the Organizational level (O-level), Intermediate level (I-level), and Depot level (D-level) maintenance. Parts of the system are exposed to the saltwater environment, therefore, vigorous corrosion control inspection and treatment procedures are essential maintenance actions for both O-level and D-level maintenance.

11.2.2.1 O-level Maintenance. This level of maintenance is to be performed on the AN/ASQ-232 in shop spaces. Maintenance includes troubleshooting to the Weapons Replaceable Assembly (WRA), Shop Replaceable Assembly (SRA) and Sub-Shop Replaceable Assembly (SSRA) level and preventative (scheduled) maintenance. Faulty WRAs and SRAs will be sent to the Fleet Support Team (FST) for repair or replacement. Post operation system corrosion

control includes cleaning and washing down of all components and PSE. O-level maintenance includes the following preventative and corrective (unscheduled) maintenance.

a. Preventative Maintenance. Maintenance normally occurs between missions and includes pre and post mission inspections and Periodic Maintenance Requirements Manual (PMRM) tasks.

b. Corrective Maintenance. This maintenance, performed by O-level technicians, includes replacement of WRAs, SRAs SSRAs, cleaning and reseating of loose or dirty connectors, filters and "O"-rings.

11.2.2.2 I-level Maintenance. This level of maintenance is performed aboard ship by designated Aircraft Intermediate Maintenance Department/Fleet Readiness Center (AIMD/FRC). Currently, I-level maintenance tasks on this system include requisition, receipt, storage, assembly, delivery and issuance of ordnance; breakout, strike up and strike down from/to magazines; visual inspection of ordnance and containers (special, conditional and breakout); corrosion control treatment and repainting, compliance with Notices of Ammunition Reclassification (NARs) and Technical Directives (TDs) and All-Up-Round (AUR) testing. I-level personnel (Navy Enlisted Code (NEC) 6801) will handle stated I-level maintenance. In addition, I-level personnel (NEC 8391 and AOs) will remove and replace Training Neutralizer propellers and maintain NiCad batteries when in their custody. The AIMD/FRC personnel will store and maintain NiCad batteries when in their custody. The Expendable Neutralizer is considered an AUR.

11.2.2.3 D-level Maintenance. Naval Surface Warfare Center Panama City (NSWC-PC) FST personnel perform D-level maintenance. Systems and components are returned to D-level for repair. Depot NSWC PC will perform ordnance certification of the DSA, the IWA, the umbilical cable, the deck transport assembly and the hand transport assembly every four years. The FST is the designated overhaul authority for the expendable neutralizer. Standard Depot Level Maintenance (SDLM) is scheduled for the expendable neutralizer every three years. This SDLM cycle is based on the age and usage history of the system. Units shipped for SDLM induction must be in an operational Non Ready For Issue (NRFI) status. Units received in an NRFI condition will be returned to the squadron.

11.2.3 Training Requirements Identified During Acquisition.

11.2.3.1 Navy Training Plan (NTP). The NTP is a product of the acquisition process. It is an official statement of billets, personnel, and training resource requirements needed to support the introduction and life-cycle operational use of an ordnance item or weapons system. The NTP assigns responsibilities for planning, programming, and implementing actions necessary to accomplish the following:

a. Ensure coordination of billets, personnel, military construction, training support, and training planning concurrently with the ordnance item or weapons system development and production.

b. Provide efficient and adequate training programs phased with initial ordnance item or weapons system introduction and subsequent modifications.

11.2.3.2 Training Aids. Another important training issue during the acquisition phase is identifying training aid requirements and including them in the acquisition plan. Training aids are

covered in the NTP. However, occasionally an ordnance item or weapons system will be introduced into the system, or an existing one modified, which does not result in the development or update of an NTP. In these cases the need for new training aids must still be considered.

11.2.3.3 Training Aid Users. While developing an acquisition plan for a new ordnance item or weapons system, the following schools at a minimum need to be consulted to determine if any training aid requirements exist to provide proper training to the Fleet on the new item:

a. Gunners Mate (GM) School,
Service Schools Command
(SERVSCOLCOM)
Great Lakes, IL 60088-5400

b. Fleet Combat Training Center Atlantic
(FCTCL), Dam Neck
1912 Regulus Ave.
Virginia Beach, VA23461-2098

c. Navy School, Explosive Ordnance Disposal
(NAVSCOLEOD)
Eglin AFB, FL 32542-6009

d. Defense Ammunition Center
Attn: SMAAC-DO
1 C Tree Road
McAlester, OK 74501-9054

11.2.4 Integrated Logistics Support (ILS) Elements. Supply Support. Naval Supply Systems Command Weapon Systems Support, Mechanicsburg (NAVSUP WSS-M), Pennsylvania and the NAVSUP Global Logistics Support, Mechanicsburg (NAVSUP GLS AMMO-M), Pennsylvania provide traditional supply support. The interim support period will exist from the Initial Operational Capability (IOC) date until the Material Support Date (MSD). Interim spares will be located at NSWC PC. NAVSUP WSS-M has built the interim preliminary Allowance Parts List (APL) and preliminary Allowance Equipage List (AEL) to support the equipment. The 0-Cognizance currently assigned to the Interim Supply Support Plan (ISSP) will migrate to 7E and 1H 60 days prior to MSD.

11.2.4.1 Training. Formal operator and maintenance training is not required for support of the AN/ASQ-232. The following is a list of recommended training:

a. Initial operator and maintenance training.

b. Follow-on training for operator and maintenance personnel.

c. Unit-level training is conducted for Fleet personnel by the FST at the Fleet location as required.

d. Ordnance handling and certification training will be required to maintain an ordnance qualification certification program as outlined in OPNAVINST 8020.14/MCO P8020.11 and will be a joint effort between NSWC PC and Commander, Naval Sea Combat Wing Atlantic (COMNAVSEACBTWINGLANT). Each squadron will be responsible for qualifying and certifying weapons load teams.

11.2.4.2 Facilities Requirements. Facilities necessary to support the AN/ASQ-232 at the O-level and I-level include existing weatherproof storage and electronic shop space for conducting maintenance. A Specialized Repair Facility (SRF) is required for the expendable neutralizer. Facility analysis of industry and government team facilities will be accomplished prior to Fleet introduction to assess facilities for follow-on support, maintenance and material distribution.

a. Shore-based facilities for maintenance and storage of the AN/ASQ-232 and its PSE and MIRs are adequate. Classroom training facilities are adequate for AN/ASQ-232.

b. Ship-based and non-CONUS facilities. AMCM squadrons receive limited AIMD support from aviation-type ships and overseas shore facilities. The stowage location is as follows:

Containerized/Bare Weapon Stowage Location	
LHA-1 Class	Number 9 Upper Cargo/Weapons Magazine or as otherwise designated by Weapons Officer.
LHD-1 Class	Number 4 or Number 5 Upper Cargo/Weapons Magazine or as otherwise designated by Weapons Officer.
LPD-4 Class	Cargo/Weapons Magazine as designated by Weapons Officer.

11.2.4.3 Manpower skills and skill levels to support operational and maintenance aspects of the AN/ASQ-232 are adequate. Refer to the Manpower Analysis Report for the MH-3H helicopter and AN/ASQ-232 Airborne Mine Neutralization System dated July 19, 2004.

11.2.4.4 Packaging, Handling, Shipping and Transportation (PHS&T). The AMNS equipment is packaged and shipped In Accordance With (IAW) MIL-STD-129P, Marking Military Equipment for Shipping and Storage. Unique Identification markings will be IAW MIL-STD-130L, Identification Marking of U.S. Military Property. Both Neutralizers use the same storage container (P/N 34952). The remaining components (non-ordnance) and support equipment for each system are stored in three separate storage containers: Part Numbers: 34857 (container 1), 34860 (container 2), and 34863 (container 3). The AMNS System will be preserved IAW Naval Air Systems Command Instruction NAVAIR 17-1-125, Support Equipment Cleaning, Preservation and Corrosion Control.

11.2.4.5 Plan Changes. Recommended changes for this system will be submitted to the Program Executive Officer, Mine and Undersea Warfare, Washington Navy Yard, 1333 Isaac Hull Avenue, S.E. Building 201, 4th Floor, Washington, DC 20376; with copy to AMCM Fleet Readiness Fleet Support Team, Naval Surface Warfare Center, 110 Vernon Avenue, Panama City, FL 32407-7001, ATTN: Code A22.

CHAPTER 11.3

Rapid Airborne Mine Clearance System (RAMICS)

Table of Contents

Paragraph	Subject	Page
11.3.1	Rapid Airborne Mine Clearance System	11-3-1
11.3.2	Physical and Functional Description	11-3-1
11.3.3	Maintenance Concept	11-3-1
11.3.4	Built-In-Test (BIT) Design	11-3-2
11.3.5	Reliability and Maintainability (R&M)	11-3-2
11.3.6	Support Equipment Requirements	11-3-3
11.3.7	Manpower Skills and Facility Requirements	11-3-3
11.3.8	General Training Requirements	11-3-4
11.3.9	Training Sources	11-3-4
11.3.10	Schoolhouses	11-3-4

CHAPTER 11.3

Rapid Airborne Mine Clearance System (RAMICS)

11.3.1 Rapid Airborne Mine Clearance System. The RAMICS (AN/AWS-2) is a non-towed airborne mine neutralization system that is operated from an MH-60S Organic Airborne Mine Countermeasure (OAMCM) helicopter and deployed from the Littoral Combat Ship (LCS) in the Carrier Strike Group (CSG) and Expeditionary Strike Group (ESG). It provides a rapid response clearance capability against near-surface and surface (floating) moored mines that have been detected, classified, and localized by the Airborne Laser Mine Detection System (ALMDS) or other mine hunting systems.

11.3.2 Physical and Functional Description. The RAMICS Pod Subsystem consists of an Environmental Control System (ECS); Targeting and Fire Control Subsystem (TFCS); Pod Housing Subsystem (PHS); Government Furnished Equipment (GFE); Pod Pressurization Subsystem (PPS); the Gun Subsystem, which is comprised of a Gun and Turret with Northrop Grumman Corporation (NGC) supplied collimator.

a. RAMICS uses an electro-optic Light Detecting and Ranging (LIDAR) system to reacquire a target and aim the Gun Subsystem (GS). The gun is a MK 44 30mm gun that uses the Munition Element (ME) MK 258 MOD 1 Armor Piercing Fin Stabilized Discarding Sabot Tracer (APFSDS-T). This projectile is stable during air flight, successfully penetrates the surface of the water, and supercavitates while in the water, which greatly reduces the drag and improves underwater flight performance.

b. The GS uses the MK 44 Bushmaster Cannon that is a chain driven automatic gun that fires 30mm munition. This gun is also slated to be used on the AAAV and LPD-17 and is capable of firing projectiles with high kinetic energy and high accuracy but is relatively lightweight. The munition that will be used by RAMICS is a modification of the 30mm MK 258 MOD 0 APFSDS-T. The RAMICS version is designated MK 258 MOD 1 APFSDS-T. The nose of the projectile is modified (blunted) so that it generates a water cavity the remainder of the penetrator flies in. This phenomenon is termed supercavitation and allows the projectile to reach the required depths with sufficient kinetic energy to penetrate the mine casing and neutralize the mine by deflagration, detonation or sinking. The fins of the penetrator provide stabilization in air and water.

c. The turret was developed specifically for RAMICS. It is capable of pointing the gun with high accuracy and providing a significant recoil reduction (from more than 7,000 lbs. to less than 4,000 lbs.) while being lightweight and compact. The low recoil allows the gun to be mounted on the helicopter without risk of structural damage. The combination of gun, turret and munition provides RAMICS with the capability to fire high-energy projectiles at a mine target with high accuracy and high probability of neutralization.

11.3.3 Maintenance Concept. The RAMICS pod has a two-level Maintenance Concept (Organizational to Depot level. The RAMICS gun system will have three levels of maintenance (Organizational to Intermediate to Depot).

11.3.3.1 The pod two level concept includes removal and replacement of the RAMICS Weapon Replaceable Assembly (WRA) at the Organizational level with follow-on repair to be completed at the Depot. The two level maintenance concept described herein is based on the preliminary Level of Repair Analysis (LORA) results. A two-level Maintenance Concept is the most cost effective manner of minimizing the Life Cycle Costs (LCC) while maintaining the specified system readiness objectives. The Maintenance Concept associated with the RAMICS adheres to the requirements of the Statement of Work (SOW), and the Concept of Operations for the MH-60S Anti-Mine Warfare Operations In the Battle Group.

NOTE

For the purpose of this document, the following definitions will be used when discussing the system hierarchy:

a. The WRAs are the AN/AWS-2 end item, the Gun Subsystem, the Boresight Laser and the Collimator.

b. The Shop Replaceable Assemblies (SRAs) are the subassemblies of the WRAs: Laser Assembly, Processor Chassis Assembly, Power Distribution Assembly (PDA), Receiver Assembly, Gimbal Assembly, ECS, PPS, PHS.

11.3.4 Built-In-Test (BIT) Design. There are three types of BIT run by the RAMICS:

a. Power Up BIT (PUB). PUB begins when power is first applied. When electrical power is applied to RAMICS (through actuation of a Common Console control) the system will automatically start up in the STANDBY State and begin performing PUBs.

b. Continuous BIT (CBIT). RAMICS is designed so that BITs automatically initiate periodically during the operation of the system, where they do not interfere with the safe operation of the subsystems/WRAs involved.

c. Operator Initiated BIT (OIB). OIB, like the other BIT capabilities, monitors the status of system health, mission critical components and system safety interlocks.

11.3.4.1 Power Up and Continuous BIT run automatically, but the continuous BIT is less extensive. OIB has some features that are not available for the automatic modes.

11.3.5 Reliability and Maintainability (R&M). The design of the RAMICS exceeds all R&M requirements and features a low risk R&M program. These features include:

a. A single sealed System containing the laser and all optical components which does not require any alignment at the Organization level. This eliminates the need for special maintainer skills and special support equipment. The sealed optics/laser path also protects the equipment from contamination by dust, moisture, or salt.

b. Extended life of the diode array due to the narrow laser pulse width.

c. Environmental protection from damage due to temperature, pressure, vibration, humidity, and salt.

11.3.5.1 Reliability Analysis will be updated throughout the System Design and Development (SD&D) phase and the results will be fed back into the design process so that deficiencies can

be identified and corrected. Preliminary reliability predictions indicate that the RAMICS has a series Mean Time Between Failure (MTBF) of 284 hours. Preliminary predictions are based on vendor supplied data and MIL-HDBK-217 parts count predictions.

11.3.6 Support Equipment Requirements. NGC will provide Support Equipment (SE) obtained as GFE and factory type test equipment in sufficient quantity to support specified maintenance requirements for the RAMICS System. NGC will also identify materials and services, equipment, tools, and outfitting of facilities to accomplish specified Organizational and Depot level maintenance requirements.

11.3.7 Manpower Skills and Facility Requirements. There is no requirement for additional manpower skills at the Organizational level. A Class I clean room is required to complete repairs on the Laser Transmitter/Receiver Subassembly, and will be provided by the Original Equipment Manufacturer (OEM). The Safety Analysis has determined that the Laser will never be safe for repair at the Organizational level.

11.3.7.1 Organizational Maintenance Tasks. Maintenance tasks at O-level are minimal. These tasks will include:

a. Removal of the RAMICS from the shipping container and preparation for flight.

b. Installation of the RAMICS Pod and checkout on the aircraft.

c. Removal of the RAMICS from the aircraft and installation in the shipping container.

d. Removal of the collimator.

e. Removal of the Boresight Laser Assembly.

f. Boresight alignment.

g. Performing periodic inspections and Planned Maintenance System (PMS) services.

h. NGC will not prepare any Battle Damage Assessment Reports (BDARs) for the RAMICS.

11.3.7.2 Depot Maintenance Requirement. The Depot or contractor facility will be responsible for repairing the RAMICS WRA and all SRAs designated as repairable.

11.3.7.3 Contractor Support. Interim Contractor Support will be provided through completion of the flight test program. Any additional contractor support will be addressed after award of a production contract.

11.3.7.4 Manpower and Personnel Integration. Manpower, Personnel, and Training (MPT) considerations are integrated into the design effort of the RAMICS to improve total system performance and reduce cost of ownership. This is accomplished by focusing attention on the capabilities and limitations of the sailor. A key enabler of this effort will be modern Information Technology as it relates to Interactive Electronic Technical Manuals (IETMs) and training data.

11.3.7.5 The Manpower and Personnel Integration consists of conducting a detailed maintenance manpower analysis, designing systems to minimize maintenance requirements, and developing a training system for maintenance personnel utilizing the Navy's Training Planning Process Methodology (TRPPM). TRPPM produces a single product, the initial Navy Training System Plan (NTSP). This plan ensures MPT considerations are integrated into the design effort

of RAMICS. It is expected that maintenance tasks associated with the RAMICS will be within the capabilities of the Navy's existing enlisted rating structure.

11.3.7.6 Avionics Technicians (AT) with an as yet undetermined Navy Enlisted Classification (NEC) will be assigned to MH-60S squadrons to provide maintenance support for the RAMICS. These technicians will be fully trained to conduct maintenance on the RAMICS as well as the additional OAMCM systems as required. These technicians will be the keystones to supporting OAMCM maintenance requirements while deployed in the field/on the flight deck and during lily-pad operations.

11.3.7.7 Aviation Ordnancemen (AO), NEC Code 8378, will perform aircraft mission configuration of the RAMICS. This Airborne Mine Countermeasure (AMCM) systems maintenance support concept is similar to that currently in place within the Helicopter Mine Counter- measures Community and is supported by the Office of the Chief of Naval Operations (CNO).

11.3.8 General Training Requirements. Training requirements for individuals and groups involved directly or indirectly in ordnance or explosives handling can be found in many different instructions. Most process governing instructions contain a section which identifies required training. NAVSEA OP 5 covers a broad spectrum of training requirements. Each Type Commander (TYCOM) has ordnance training courses listed in their training requirements manual. There are many technical training courses available to cover training requirements in the following:

a. Ordnance management.

b. Explosives safety.

c. Ordnance transportation.

d. Ordnance handling.

e. Ordnance automated management systems.

11.3.9 Training Sources. For many, identifying all of the available training is as difficult as determining all of the training requirements. No one document exists that identifies all of the available ordnance training. One good source is the Catalog of Navy Training Courses (CANTRAC). The shortfall of the CANTRAC is that it only lists formal schoolhouse training identified by a Navy Course Identification Number (CIN). In this era of joint training, there are many formal ordnance training courses offered by the Army that are available to the Navy, and informal ordnance training courses within the Navy, that do not have an assigned Navy CIN. Another good reference for training sources is NAVSEA OP 5. The Catalog of Nonresident Training Courses, NAVEDTRA 12061, provides information on available correspondence courses.

11.3.10 Schoolhouses. The following schoolhouses provide the majority of the formal training or training materials for informal training:

a. Defense Ammunition Center (DAC) McAlester, OK. As directed in DOD 5160.65-M, DAC provides training in ordnance management, explosives safety, and ordnance transportation to all DOD military and civilian personnel. Navy related training is available through Computer Based Training (CBT), CD-ROM media, and is conducted both at DAC and on site at the requesting activity. Further information can be obtained by accessing the DAC website at https://www3.dac.army.mil/navy.

b. Fleet Combat Training Center (FCTCL), Dam Neck, VA. FCTCL provides training in ordnance management and ordnance handling for military personnel on the East coast. Further information can be obtained by accessing the FCTCL website.

c. Fleet Training Center (FTC), San Diego, CA. FTC provides training in ordnance management and ordnance handling for military personnel on the West coast. Further information can be obtained by accessing the FTC website.

d. Surface Warfare Officer's School (SWOS), Newport, RI. SWOS provides ordnance management training for Surface Warfare Officers. Further information can be obtained by accessing the SWOS website.

OPNAV M-8000.16 Volume III
30 April 2012

THE NAVAL ORDNANCE MANAGEMENT POLICY (NOMP)

VOLUME III

APPENDICES

DEPARTMENT OF THE NAVY
OFFICE OF THE CHIEF OF NAVAL OPERATIONS
WASHINGTON D.C.

RECORD OF CHANGES			
CHANGE NO.	**DATE**	**TITLE OR BRIEF DESCRIPTION**	**ENTERED BY**

TABLE OF CONTENTS

VOLUME III

APPENDICES

Chapter	Subject	Page
A	Air Launched Missile and Container Maintenance, Configuration, and Support Equipment Data Collection	A-1
B	Conventional Ordnance Publications Listing	B-1
C	Management Information Coding Lists	C-1
D	Serviceable In-Service Time/Service Life Designations for Weapons	D-1
E	Naval Conventional Ordnance Operational Logistics Policy	E-1
F	Conventional Ordnance Inventory Accountability	F-1
G	Conventional Ordnance Assessment And Maintenance Requirements Policy	G-1
H	Explosives Safety Review, Oversight, and Verification of Response Actions Involving Military Munitions	H-1
I	Navy Munitions Disposition Policy	I-1
J	Funding Responsibility for Receipt, Segregation, Storage, and Issue (RSSI) at Navy Munitions Command (NMC) Activities	J-1
K	Instructions for Obtaining and Completing Forms and Records	K-1
L	Record of Changes and Interim Changes	L-1
M	Acronyms	M-1
N	Definitions	N-1

APPENDIX A

Air Launched Missile and Container Maintenance, Configuration, and Support Equipment Data Collection

APPENDIX A

Air Launched Missile and Container Maintenance, Configuration, and Support Equipment Data Collection

Table of Contents

Paragraph	Subject	Page
A1	Air Launched Missile Maintenance Data	A-1
A2	Maintenance Data Reports at Fleet Readiness Centers and Commercial Contractors	A-2
A3	As-Built Configuration List	A-16

List of Illustrations

Figure	Title	Page
A-1	Depot Maintenance Data Collection	A-5
A-2	Excerpt from Data Item Description	A-8

APPENDIX A

Air Launched Missile and Container Maintenance, Configuration, and Support Equipment Data Collection

A1 Air Launched Missile Maintenance Data.

a. Maintenance Data Form. Significant air launched missile maintenance actions must be entered into the maintenance data system using OPNAV 8600/11A (maintenance data system for air launched missile systems). OPNAV 8600/11B (Maintenance Data System for Air Launched Missile Containers) Instructions for obtaining and completing forms and records can be found in Appendix K.

b. Reporting Requirements. All significant maintenance actions that are performed on air launched missile all-up round, sections, components and air-launch missile containers will be reported in the format of OPNAV 8600/11A and OPNAV 8600/11B. Information in the required format will be collected from all activities that perform maintenance on air-launched missiles, e.g., Naval Weapon Stations, Navy Munitions Command (NMC) Detachments, Ordnance Assessment Activities, and Naval Airborne Weapons Maintenance Units. Maintenance significant actions include the following:

(1) Test, inspection, or reprogramming of the All-Up-Round (AUR).

(2) Missile sentencing inspection.

(3) Disassembly of the AUR.

(4) Assembly of the AUR.

(5) Inspection, test, and repair of any section.

(6) Inspection and test of any component.

(7) Removal and installation of any component.

(8) Performance of all Technical Directives (this includes Airborne Weapon Changes (AWCs), Airborne Weapon Bulletins (AWBs), Notices of Ammunition Reclassification (NARs).

(9) Accomplishment of container maintenance.

NOTE

All test set variables data will be downloaded at the end of each month and sent to Naval Air Warfare Center Weapons Division (NAVAIRWARCENWPNDIV), Code 684200E.

c. Reporting Procedures. Maintenance information that describes the same operation performed on a number of similar units may be reported as a summary. Missile sentencing inspections, receipt inspections, and visual tests represent the types of maintenance actions that are suitable for summary reporting. Unit reporting procedures will be used to record a series of maintenance operations to a single unit; a separate reporting document (form) will be used for each unit so reported.

d. Reporting Codes. Reporting codes have been adapted from other data systems and developed locally to assist in entering data into the format of OPNAV 8600/11A and OPNAV 8600/11B. Codes that are used to complete the maintenance data are contained in Volume III, Appendix C of this manual. There are some departures from prior codes used for data entry. These codes are noted where they appear in the text.

e. Method of Data Submission. Information contained in the OPNAV 8600/11A and OPNAV 8600/11B is collected and organized into a data system at the central data collection agency, NAVAIRWARCENWPNDIV. The preferred method of data transmittal is via the Airborne Weapons Analysis and Reporting System (AWARS), Data Entry System (DES), which allows direct data entry in the format of the OPNAV 8600/11A and OPNAV 8600/11B. Use of the AWARS, DES, expedites reporting and improves the accuracy of maintenance data. If facilities or trained personnel are not available to use the AWARS, DES, data may be submitted by mailing the completed forms to:

Commander
Naval Air Warfare Center Weapons Division
Attn: Code 684200E (AWARS)
1 Administration Circle, Bldg 2466
China Lake, CA 93555

NOTE

For SIDEWINDER 9M (only) mail to:
NSWC Corona Division
Code PE-31, BLDG #516
P.O. Box 5000, Corona, CA 92878-5000

A2 Maintenance Data Reports at Fleet Readiness Centers and Commercial Contractors.

a. Maintenance Reporting. Information that describes maintenance and repair performed at organic depots and commercial contractors is collected into a common database for air launched missiles. The Fleet Readiness Centers contractors' existing data collection, analysis, and corrective action systems shall be used with modification only as necessary to meet the requirements specified by the central data collection agency.

NOTE

For the purposes of this manual, no distinction will be made between commercial Depots and government-operated activities undertaking performance of a task (Organic Depots). References to contractor facilities and formats will apply equally to all air launched missile maintenance Depots. The requirements set forth in this paragraph are based on not yet approved Data Item Descriptions (DIDs) and apply to government-operated Depots. These requirements are provisional to commercial Depot activities and are dependent upon the approval of an updated DID DI-R-21598.

NOTE

All AMRAAM depot maintenance data collection, reporting and analysis is the responsibility of the contractor under the Total System Performance Responsibility. AMRAAM data is consolidated in the Reliability Asset Management System (RAMS).

b. Reporting Requirements. All maintenance and repair of repairables accomplished during rework at Fleet Readiness Centers and commercial contractors shall be documented to an extent and in such a manner that:

(1) The installation, removal, and final disposition of material is both traceable and accountable.

(2) Records are maintained as a result of changes that occur in configuration, nomenclature, status, or condition of All-Up-Round (AUR)s, air launched missile components (including support equipment and containers), and rework material.

(3) Conditions that existed during test are documented and test results are recorded.

(4) Results of analyses or engineering investigations are summarized and engineering data is available that supports recommendations and corrective actions taken.

c. Reporting Procedures. Maintenance data will be provided individually for each item in rework; that is, unit reporting procedures will be used versus “BATCH” reporting procedures. To the maximum extent practical, the data will be recorded in a magnetic tape medium. The recording format and other characteristics will be determined by the contractor and coordinated with the central data collection agency. Data recorded on magnetic tape must be accompanied by a complete file description and a partial listing of the data as follows:

(1) Recording density (9-track/6250 bpi preferred).

(2) Character set (ASCII preferred).

(3) Parity option.

(4) Character and word length.

(5) Record and block length.

In addition to a file description, a partial listing of the data contained on each tape along with identification of field headers using descriptive names is required to be provided. Coordination with the central data collection agency is a prerequisite to ensure compatibility for data transfer. Any subsequent changes in file structure or recording characteristics require prior concurrence of the central data collection agency.

d. Reporting Codes. Common reporting codes used to enter data into the database from Intermediate and Organizational level Maintenance Activities are contained in Volume III, Appendix C. In most cases these codes will be suitable for Depot level reporting as well.

e. Method of Data Submission. Maintenance and configuration data will be collected and integrated with similar data from other maintenance activities and user organizations. Data is to be submitted by mailing all record material to:

Commander
Naval Air Warfare Center Weapons Division
Attn: Code 684200E (AWARS)
1 Administration Circle, Bldg 2466
China Lake, CA 93555

Data shall be submitted routinely on a monthly basis and shall include all maintenance data up to 5 (working) days prior to submission.

f. The following conventions are to be observed for submitting maintenance and configuration data:

(1) Part/Serial/Lot numbers. Enter all prefixes, lead zeros, dashes, slant lines, alpha-characters, and suffixes.

(2) Date. Enter calendar dates in year-month-day (YYMMDD) numeric format.

(3) Time. Enter interval times in hour and tenths-of-hour (hh.h) format with expressed decimal.

(4) Mandatory entry. For each element, enter the data item specified or enter a common abbreviation that indicates the following:

UNK Unknown

N/A Not applicable

DNO Did not occur

(5) Symbols. Use the plain English equivalent for algebraic symbols associated with data elements:

(+) plus,

(-) minus,

(°) degree, etc.

(6) Precision. Do not truncate data elements. Express all decimals.

g. Provide data specified in this section for all maintenance, rework, refurbishment, and modification of air launched missiles and components. Figure A-1 is a representation of the data elements required to be reported during maintenance keyed by paragraph number to the DID preparation instructions. Figure A-2 is an excerpt from a DID and is used in conjunction with Figure A-1.

h. Provide records of test parameter data that is recorded in the course of ordinary testing during maintenance or in the course of conducting extraordinary tests during engineering investigations. Test variables data collected during maintenance or engineering investigation shall be consistent in scope, format, and content with similar data provided during production and acceptance testing as specified in DID DI-T21244A and revisions thereto. These data records

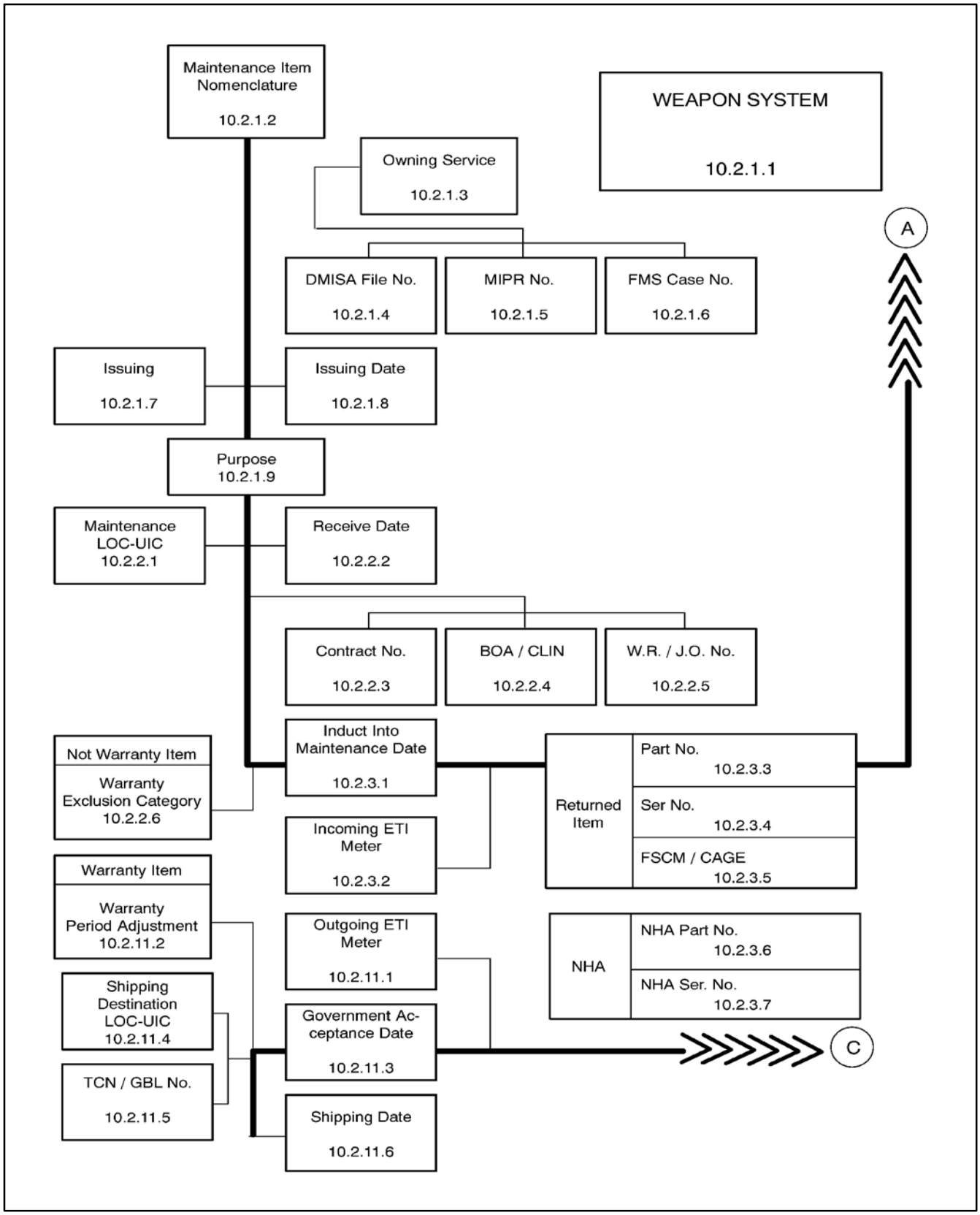

Figure A-1. Depot Maintenance Data Collection

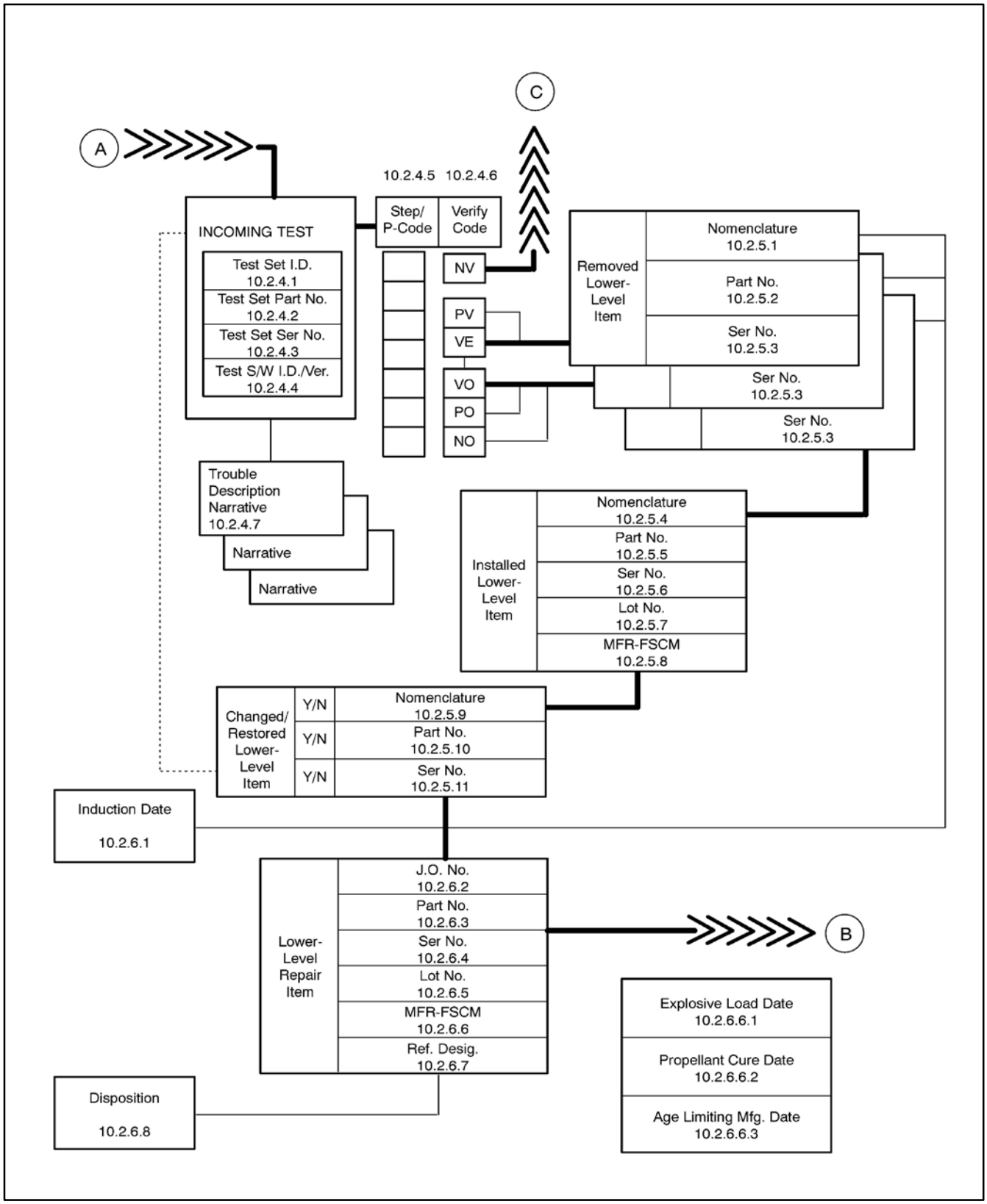

Figure A-1. Depot Maintenance Data Collection - contd.

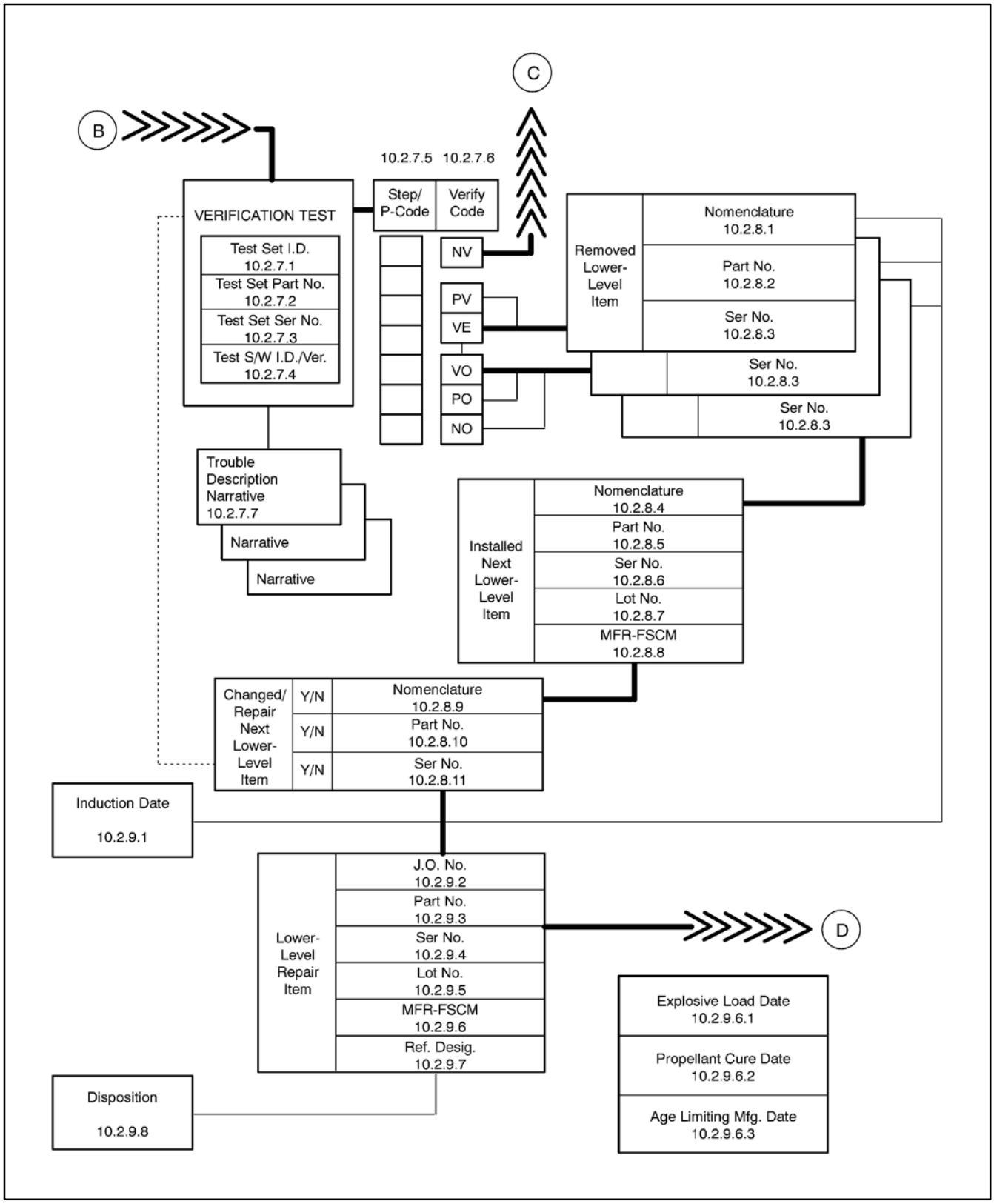

Figure A-1. Depot Maintenance Data Collection - contd.

10.2.1	Enter data to identify the source of material returned for Depot rework and reference information pertinent to ownership responsibility and authority for maintenance.	
10.2.1.1	WEAPON SYSTEM	The common name and designation of the top-level system of which the returned material is a component or part (e.g. HARPOON, AGM-84D).
10.2.1.2	MAINTENANCE ITEM NOMENCLATURE	The common nomenclature used to describe the material (item) returned for rework (e.g. guidance section).
10.2.1.3	OWNING SERVICE	Army (A), Marine Corps (MC), Navy (N), Air Force (AF), or Foreign Military Sales (FMS).
10.2.1.4	DMISA FILE NO.	Depot maintenance inter-service support agreement containing information for rework or other support that is accomplished in a service from the owning service.
10.2.1.5	MIPR NO.	Military interdepartmental procurement request that contains information for rework funded under this document for maintenance costs reimbursable to the performing service Depot.
10.2.1.6	FMS CASE NO.	Foreign military sales information (including country code) that identifies ownership, authorization, and appropriation data for material released under the security assistance plan.
10.2.1.7	ISSUING ACT LOC-UIC	Name of the activity with custody of the material being LOC-UIC returned for depot maintenance, and the unit identification code of that activity. In the usual case this will be a coastal Naval Weapons Station, NMC Detachment or Naval Air Station returning intermediate BCM material for Depot rework.
10.2.1.8	ISSUE DATE	Date the material is released by the issuing activity for shipment to a Depot.
10.2.1.9	PURPOSE	Repair, refurbish, modify, etc. The reason for the return of material should be identified in documentation that accompanies the returned item; field failures should be noted, and engineering changes or TDs that require Depot modifications should be identified by numbered bulletin, change notice, etc.
10.2.2	Enter data that identifies the receipt of material for Depot maintenance and the contractual documents that contain authorization and appropriation data and terms and conditions of repair, rework, or modification.	

Figure A-2. Excerpt from Data Item Description

10.2.2.1	MAINTENANCE LOC-UIC	Name of the activity that receives the material for Depot maintenance and the unit identification code of the activity (e.g. Anniston Army Ammunition Depot-66163).
10.2.2.2	RECEIVED DATE	Date the material was received at the maintenance location.
10.2.2.3	CONTRACT NO.	Identifies the contract that contains terms and conditions under which maintenance will be accomplished.
10.2.2.4	BOA/CLIN	Identifies the basic ordering agreement under which the contracting officer can authorize maintenance and repair. Further identifies the individual contract line item (number) for the specific repair.
10.2.2.5	W.R./J.O. NO.	Identifies the work request document that contains authorization and appropriation data for maintenance in Organic Depots, and locally assigned job order number.
10.2.2.6	NOT WARRANTY ITEM WARRANTY EXCLUSION CATEGORY	A statement of conditions or circumstances (category) believed to apply to the material returned for repair that would render the maintenance excludable from the terms of the contract warranty clause.
10.2.3	Enter data that identifies the configuration of the material returned for maintenance, and the next higher assembly identification, if known. Record the date of induction and elapsed operating time monitored in the item, if applicable.	
10.2.3.1	INDUCT INTO MAINTENANCE DATE	Date the returned material is inducted for Depot maintenance. This should correspond to the date in OIS files that material condition code is changed from D, E, or F to condition code M as reported via the ammunition transaction report.
10.2.3.2	INCOMING ETI METER	Cumulative operating time recorded from the elapsed time indicator at the time the returned item is inducted for maintenance.
10.2.3.3	RETURNED ITEM PART NO.	The part number as it appears on the item returned for maintenance.

NOTE

Here and in subsequent sections that require identification of a configuration item by part number, serial number, lot number, drawing number, etc, include all prefixes, lead zeros, dashes, slant lines, alpha-characters, and suffixes.

Figure A-2. Excerpt from Data Item Description - contd.

10.2.3.4	RETURNED ITEM SER. NO.	The serial number that appears on the item returned for maintenance.
10.2.3.5	RETURNED ITEM FSCM/CAGE	The Federal Supply Code for Manufacturers (FSCM) or the Commercial and Government Entity (CAGE); a code that identifies the manufacturer or supplier of the item returned for maintenance.
10.2.3.6	NHA PART NO.	The part number for the next higher assembly of which the item returned for maintenance comprised a section, subassembly, etc.
10.2.3.7	NHA SER NO.	The serial number of the next higher assembly from which the item returned for maintenance was removed, if known.
10.2.4	Enter data that documents the results of incoming test of the material returned for maintenance and verification of previously reported failure conditions.	
10.2.4.1	TEST SET I.D.	The common name and type designation of test equipment used for incoming test and verification of the item returned for depot maintenance. (e.g. HARPOON MSTS, AN/DSM-127).
10.2.4.2	TEST SET PART NO.	The part number of the test set used for incoming test of the returned item.
10.2.4.3	TEST SET SER. NO.	The serial number of the test set used for incoming test of the returned item.
10.2.4.4	TEST S/W I.D./VER	The common name or mnemonic that identifies the test software and revision used for incoming test of the returned item.
10.2.4.5	STEP/P-CODE	Test parameter codes (test step numbers, P-codes) that identify parameter(s) out of specification.
10.2.4.6	VERIFY CODE	Codes that establish correlation with reported field failures; not verified (NV), verified exactly (VE), or partially verified (PV); also verified with other failures noted (VO), partially verified with other failures noted (PO), and not verified, but other failures noted (NO).
10.2.4.7	TROUBLE DESCRIPTION NARRATIVE	A narrative discussion of failure or problem symptoms noted during test. Include, as appropriate, measured parameter values, specification or other “should be” values, environmental conditions and pertinent observations.

Figure A-2. Excerpt from Data Item Description - contd.

10.2.5	Enter data that specifically identifies the lower level item(s) that are replaced or repaired in the material returned for maintenance to restore the original item to serviceable condition and RFI status.	
10.2.5.1	REMOVED LOWER LEVEL ITEM NOMENCLATURE	The common name or plain English description of the lower level item removed from the returned item in the course of normal maintenance.
10.2.5.2	REMOVED LOWER LEVEL ITEM PART NO.	Part number of the item identified in paragraph 10.2.8.1.
10.2.5.3	REMOVED LOWER LEVEL ITEM SER. NO.	Serial number of the item identified in paragraph 10.2.8.1.
10.2.5.4	INSTALLED LOWER LEVEL ITEM NOMENCLATURE	Common name of the item installed to replace the item removed for maintenance, or installed without removal.
10.2.5.5	INSTALLED LOWER LEVEL ITEM PART NO.	Part number of the item identified in paragraph 10.2.8.4.
10.2.5.6	INSTALLED LOWER LEVEL ITEM SER. NO.	Serial number of the item identified in paragraph 10.2.8.4 (for serialized parts).
10.2.5.7	INSTALLED LOWER LEVEL ITEM LOT NO.	Lot number of the item identified in paragraph 10.2.8.4 (for non-serialized parts).
10.2.5.8	INSTALLED LOWER LEVEL ITEM MFR FSCM	Name of the manufacturer or supplier of the item identified in paragraph 10.2.8.4. Also the FSCM or CAGE number for the FSCM named manufacturer or supplier.
10.2.5.9	RESTORED/CHG LOWER LEVEL ITEM Y/N NOMENCLATURE	The common name of the item identified in paragraph 10.2.8.1 after maintenance. Indicate whether the nomenclature for the Y/N restored item is different (Y/N) from the removed item.
10.2.5.10	RESTORED/CHG LOWER LEVEL ITEM Y/N PART NO.	Part number of the item identified in paragraph 10.2.8.9. Indicate whether this part number is different (Y/N) from Y/N PART NO. paragraph 10.2.8.2.
10.2.5.11	RESTORED/CHG LOWER LEVEL ITEM Y/N SER. NO.	Serial number of the item identified in paragraph 10.2.8.9. Indicate whether this serial number is different (Y/N) from Y/N SER. NO. paragraph 10.2.8.3.
10.2.6	Enter data that identifies the maintenance and repair of a removed item at the next lower level of indenture.	
10.2.6.1	LOWER LEVEL REPAIR ITEM INDUCTION DATE	Date that repair begins on a lower level item that exhibits a verified failure or problem in incoming tests.

Figure A-2. Excerpt from Data Item Description - contd.

10.2.6.2	LOWER LEVEL REPAIR ITEM J.O. NO.	The locally assigned job order number used to account for costs associated with repair of the item.
10.2.6.3	LOWER LEVEL REPAIR ITEM PART NO.	Part number of the lower level item inducted for maintenance. This should be the same as paragraph 10.2.8.2 or 10.2.8.10.
10.2.6.4	LOWER LEVEL REPAIR SER NO.	Serial number of the lower level item inducted for maintenance. This should be the same as paragraph 10.2.8.3 or 10.2.8.11.
10.2.6.5	LOWER LEVEL REPAIR ITEM LOT NO.	Lot number of the lower level item inducted for maintenance, if applicable.
10.2.6.6	LOWER LEVEL REPAIR ITEM MFR-FSCM	Name of the manufacturer or supplier of the lower level item inducted for maintenance. Also the FSCM or CAGE number for the named manufacturer or supplier.
10.2.6.6.1	EXPLOSIVE LOAD DATE	The beginning date for determining age related time limits for items that contain explosive material (DD 1650 BLOCK 12).
10.2.6.6.2	PROPELLANT CURE DATE	The beginning date for determining age related time limits for items that contain deflagrating material, e.g., propellant grain (DD 1650 BLOCK 12).
10.2.6.6.3	AGE LIMITING MFG DATE	Manufacturing date for determining age related serviceable in-service time limits for items that do not contain volatile material.
10.2.6.7	REF DESIG	A unique drawing reference designator or circuit symbol that identifies the item inducted for maintenance, and relates the specific item to a next-higher assembly indenture level (e.g. A1CR101).
10.2.6.8	DISPOSITION	The nonspecific destination of the lower level repair item beyond this level of maintenance (e.g. calibration, return to OEM, etc.).
10.2.7	Enter data that applies to tests that are performed to verify failures or problems requiring maintenance at the next lower level of indenture.	
10.2.7.1	TEST SET I.D.	The common name and type designation of test equipment used to identify and isolate failures or problems associated with the lower level indenture of the item in paragraph 10.2.6.
10.2.7.2	TEST SET PART NO.	The part number of the test equipment identified in paragraph 10.2.7.1.

Figure A-2. Excerpt from Data Item Description - contd.

10.2.7.3	TEST SET SER. NO.	The serial number of the test equipment identified in paragraph 10.2.7.1.
10.2.7.4	TEST S/W I.D./VER	The common name or mnemonic that identifies the test software and revision used during verification tests.
10.2.7.5	STEP/P-CODE	Test parameter codes (test step numbers, P-codes) that are relatable to specific test stimulus and response measurements, or parameters that are out of specification.
10.2.7.6	VERIFY CODE	Codes that establish correlation with previously indicated failures: not verified (NV), verified exactly (VE), or partially verified (PV); also verified with other failures noted (VO), partially verified with other failures noted (PO), and not verified, but other failures noted (NO).
10.2.7.7	TROUBLE DESCRIPTION NARRATIVE	A narrative discussion of failure or problem symptoms noted during test. Include, as appropriate, measured parameter values, specification or other “should be” values, environmental conditions, and pertinent observations.
10.2.8	Enter data to account for replacement or substitution during maintenance of the next lower level item, and note any changes as a result of maintenance performed at this level that affects configuration identification.	
10.2.8.1	REMOVED NEXT LOWER LEVEL ITEM NOMENCLATURE	The common name or plain English description of the next lower level item nomenclature removed during maintenance from the item in paragraph 10.2.6.
10.2.8.2	REMOVED NEXT LOWER LEVEL ITEM PART NO.	Part number of the item identified in paragraph 10.2.8.1.
10.2.8.3	REMOVED NEXT LOWER LEVEL ITEM SER NO.	Serial number of the item identified in paragraph 10.2.8.1.
10.2.8.4	INSTALLED NEXT LOWER LEVEL ITEM NOMENCLATURE	Common name of the item used to replace the item identified in paragraph 10.2.8.1 that was removed for maintenance or the common name of the item installed without removal.
10.2.8.5	INSTALLED NEXT LOWER LEVEL ITEM PART NO.	Part number of the item identified in paragraph 10.2.8.4.
10.2.8.6	INSTALLED NEXT LOWER LEVEL ITEM SER. NO.	Serial number of the item identified in paragraph 10.2.8.4 (for serialized parts).

Figure A-2. Excerpt from Data Item Description - contd.

10.2.8.7	INSTALLED NEXT LOWER LEVEL ITEM LOT NO.	Lot number of the item identified in paragraph 10.2.8.4 (for non-serialized parts).
10.2.8.8	INSTALLED NEXT LOWER LEVEL ITEM MFR-FSCM	Name of the manufacturer or supplier of the item identified in paragraph 10.2.8.4. Also the FSCM or CAGE number for the named manufacturer or supplier.
10.2.8.9	CHG/REPAIRED NEXT LOWER LEVEL ITEM Y/N NOMENCLATURE	The common name of the item identified in paragraph 10.2.8.1 after maintenance. Indicate whether the nomenclature for the repaired item is different (Y/N) from the removed item.
10.2.8.10	CHG/REPAIRED NEXT LOWER LEVEL ITEM Y/N PART NO	Part number of the item identified in paragraph 10.2.8.9. Indicate whether this part number is different (Y/N) from paragraph 10.2.8.2.
10.2.8.11	CHG/REPAIRED NEXT LOWER LEVEL ITEM Y/N SERIAL NO.	Serial number of the item identified in paragraph 10.2.8.9. Indicate whether this serial number is different (Y/N) from paragraph 10.2.8.3.
10.2.9	Enter data that describes the configuration of lower level items down to the lowest indenture level.	
10.2.9.1	LOWEST LEVEL REPAIR ITEM INDUCTION DATE	Date that repair begins on the lowest level item exhibiting verified failure or problem that requires component level repair.
10.2.9.2	LOWEST LEVEL REPAIR ITEM J.O. NO.	The locally assigned job order number used to account for costs associated with repair of the item.
10.2.9.3	LOWEST LEVEL REPAIR ITEM PART NO.	Part number of the lowest level item inducted for maintenance. This should be the same as paragraph 10.2.8.2 or 10.2.8.10.
10.2.9.4	LOWEST LEVEL REPAIR ITEM SER. NO.	Serial number of the lowest level item inducted for maintenance. This should be the same as paragraph 10.2.8.3 or 10.2.8.11.
10.2.9.5	LOWEST LEVEL REPAIR ITEM LOT NO.	Lot number of the lowest level item inducted for maintenance, if applicable.
10.2.9.6	LOWEST LEVEL REPAIR ITEM MFR-FSCM	Name of the manufacturer or supplier of the lower level item inducted for maintenance. Also the FSCM or CAGE number for the named manufacturer or supplier.
10.2.9.6.1	EXPLOSIVE LOAD DATE	The beginning date for determining age related time limits for items that contain explosive material (DD 1650 BLOCK 12).

Figure A-2. Excerpt from Data Item Description - contd.

10.2.9.6.2	PROPELLANT CURE DATE	The beginning date for determining age related time limits for items that contain deflagrating material, e.g. propellant grain (DD 1650 BLOCK 12).
10.2.9.6.3	AGE LIMITING MFG DATE	Manufacturing date for determining age related serviceable in-service time limits for items that do not contain volatile material.
10.2.9.7	REF DESIG	A unique drawing reference designator or circuit symbol that identifies the item inducted for maintenance and relates the specific item to a next higher assembly indenture level.
10.2.9.8	DISPOSITION	The specific and final destination of the lowest level item: repaired and returned; dispositioned for special tests; scrapped; etc.
10.2.10	FAILURE ANALYSIS/ CORRECTIVE ACTION RECOMMENDED	Specific recommendations for additional investigation of the exhibited, or suspected failure modes and effects. Refer to related examples of special tests or depot failure reports, if known.
10.2.11	Enter data that documents the return of serviceable material to government custody, and the release of the repaired item to the customer's use.	
10.2.11.1	OUTGOING ETI METER	Cumulative operating time recorded from the elapsed time indicator at the time the restored item is accepted by the government.
10.2.11.2	WARRANTY ITEM/ WARRANTY PERIOD ADJUSTMENT	Modification of the term warranty period that accounts for accumulated service time, assembly of mixed warranty items at the next higher level, unserviceable time in Depot maintenance, and other factors that may pertain.
10.2.11.3	GOVERNMENT ACCEPTANCE DATE	The date custody of the repaired item is accepted for the government by appropriate government authority.
10.2.11.4	SHIPPING DESTINATION LOC-UIC	Name of the activity intended as the final destination of the LOC-UIC repaired item, and the unit identification code of that activity. This will usually be a coastal Weapons Station, NMC Detachment or Air Station, not a transshipment point.
10.2.11.5	TCN/GBL NO.	The transportation control number or the government bill of lading number that appears on the shipping documents.
10.2.11.6	SHIPPING DATE	The actual date the material is shipped from the Depot.

Figure A-2. Excerpt from Data Item Description - contd.

will provide an engineering database to support corrective action decisions and to correlate with production data in support of quality assurance efforts. Data will be provided in the contractor's format. Specific test parameters will be determined by the contractors and coordinated with the central data collection agency to be consistent with baseline production test variables data and with database file structures to facilitate the retrieval and analysis of engineering data.

A3 As-Built Configuration List.

NOTE

Acquisition Reform allows commercial contractors to retain the as-built configuration list at the manufacture. This information does not have to be deliverable but has to be available to government agencies.

a. Information that describes the current configuration of air launched missiles, air launched missile components (including spares, support equipment, and containers) and rework material is maintained in a common database integrated with maintenance data. Beginning with the original configuration of material provided by the contractor, supplied by a vendor, or government furnished, the configuration status is continuously updated during subsequent maintenance and modification, or in the case of drawings and software, during subsequent revisions. The original configuration data is supplied as a required contract deliverable in accordance with Data Item Description (DID) DD 1664, DI-ILSS-YYYYY (to be developed) As-Built Configuration List (ABCL) data. The ABCL is the baseline for configuration accounting of all air launched missile configuration items in the life cycle of the weapon. Therefore, although the ABCL is a production data requirement, it is necessary that the data collection be consistent with maintenance and configuration data collection procedures for in-service material. The contractor's existing procedures shall be used to provide ABCL data that represents the delivered configuration of air launched missile material.

b. The ABCL shall consist of part numbers, serial numbers, nomenclature, level of indenture with next higher assembly (hardware only), date of manufacture (YYMMDD), lot numbers (when applicable), approved changes (Class I and Class II), deviations and waivers to the technical data baseline, grain or batch numbers (when applicable), subcontract numbers or vendor contract numbers (when applicable), and a certified statement that the above information describes the serialized or lot-identified item delivered for all contractor, contractor-required vendor, and government-furnished material serialized or lot-identified items. The government-furnished material serialization may be limited to the "as received" assembly condition.

c. The data will be recorded in a magnetic tape medium and a complete file description and a partial listing of the data contained on the tape must be provided. Coordination with the central data collection agency is a prerequisite to ensure compatibility for data transfer. Any subsequent changes in file structure or recording characteristics require prior concurrence of the central data collection agency.

d. The ABCL data is to be submitted in accordance with guidance provided in contract documents and coordinated with the agent for maintenance data collection as provided in this manual.

APPENDIX B

Conventional Ordnance Publications Listing

APPENDIX B

Conventional Ordnance Publications Listing

PUBLICATION NUMBER	TITLE
0320-LP-083-0003	Elevator Cargo Technical Manual
0916-LP-007-1010	Conveyor Pallet, Vertical, 3000 lb. Capacity
0920-LP-107-5010	Hoisting System, EUCUS and Hangar (LHA)
0983-LP-000-1000	16000 lb. Weapons and Cargo Elevator
8020.1	Ships Instructions
Coast Guard, Code of Federal Regulations 46 CFR, Part 147	Transportation or Storage of Military Explosives
CINCLANTFLTINST 8027.3C	Explosive Ordnance Disposal
CINCPACFLTINST 8010.12	ALM Requisitioning Procedures
CINCPACFLTINST 8027.1M	Explosive Ordnance Disposal
COMMARFORLANT Order 4000.10F	Ammunition Allowance and Requisitioning
COMNAVAIRPACINST 8020.3G	Conventional Weapons Safety Assistance Teams
COMNAVSURFLANTINST C9010.1E	Fleet Underway Replenishment Guide
COMNAVSURFOR Note 8023	Personnel Explosive Certification
COMNAVSURFORINST 8023.1K	Aviation Ordnance Safety Surveys
CVN Notice 8023.1 NAVSO P-1000-25	Upload/Backload Plan Navy Comptroller Manual Vol. 2
DOD Directive 4140.1	Material Management Policy
DOD Directive 4151.18	Maintenance of Military Material
DOD Directive 5000.1	The Defense Acquisition System
DOD Directive 5134.01	Under Secretary of Defense for Acquisition, Technology and Logistics (USD(AT&L))
DOD Directive 5160.65	Single Manager For Conventional Ammunition (SMCA)
DOD 5200.1-R	Information Security Program

PUBLICATION NUMBER	TITLE
DOD Directive 6055.9	DOD Explosive Safety Board (DDESB) and DOD Component Explosives Safety Responsibilities
DOD Instruction 4100.33	Commercial Activities Program Procedures
DOD Instruction 5000.02	Operation of the Defense Acquisition System
DOD Instruction 6055.16	Explosive Safety Management Program
DOD Instruction 7045.7	Implementation of the Planning, Programming, and Budgeting System (PPBS)
DOD Manual 4160.21-M	Defense Material Disposition Manual
DOD Manual 4160.21-M-1	Defense Demilitarization Manual
DOD Manual 5160.65-M	Single Manager for Conventional Ammunition (Implementing Joint Conventional Ammunition Policies and Procedures)
DOT-SP 868	Off Station Shipments
DSA-700-75-C-8282	Truck Forklift, Electric 4000 lb. Capacity
Marine Corps Order 8023.3A	Non-Nuclear Aviation Ordnance Explosive Handling Certification and Qualification Program (Recommended)
MIL-HDBK-236	Index to Standards for Palletizing, Truck Loading, Rail Car Loading, and Container Loading of Hazardous Material
MIL-HDBK-274 (1)	Electrical Grounding for Aircraft Safety
MIL-HDBK-274 (AS)	Electrical Grounding for Aircraft Safety
MIL-HDBK-2155 (AS)	Maintenance Data Reports at Depots and Commercial Contractors Maintenance Reporting
MIL-M-38784	Manuals, Technical; General Style and Format Requirements
MIL-STD-196C	Support Equipment Maintenance Data
MIL-STD-1168	Ammunition Lot Numbering and Ammunition Data Card
MIL-STD-1323-1A	Unit Loads of Ammunition and Explosives for Underway Replenishment
MIL-STD-63012	Depot Maintenance Work Requirements for Maintenance/ Demilitarization of Conventional and Chemical Ammunition Disposal Policy
MIL-STD-WR50 Series	Classified AA&E Shipments
MIL-W-6858	Welding
NAMSO 4790.A7210-01	Aviation Type Equipment Code List CAT I TPDR Message Response, Minimize Considered

PUBLICATION NUMBER	TITLE
NAVAIR 00-25-300	Management Procedures for NAVAIR Directive System
NAVAIR 00-80R-14	NATOPS U.S. Navy Aircraft Fire Fighting and Rescue Manual
NAVAIR 00-80T-103	NATOPS Conventional Weapons Handling Procedures Manual (Ashore)
NAVAIR 00-80T-106	LHA/LHD NATOPS Manual
NAVAIR 00-80T-109	Aircraft Refueling NATOPS Manual
NAVAIR 00-80T-115	Marine Corps Expeditionary Airfields/Air Stations NATOPS Manual
NAVAIR 01-1A-75	Air Launched Missile Consumable Material Application for Cleaning and Corrosion Control
NAVAIR 01-1A-509	Aircraft Weapon Systems Cleaning and Corrosion Control Organizational, Intermediate, and Depot Level Maintenance
NAVAIR 01-AGM65E/F-1	AGM-65 IR and AGM-65 Laser Maverick Missile Descriptions and Employment Guidelines
NAVAIR 01-AIM9-0	Guided Missile AIM-9M and Training Missiles
NAVAIR 01-AIM9M-2.1	AIM-9M Sidewinder Intermediate Maintenance w/IPB
NAVAIR 01-15MGD-1	Laser Guided Bomb, MK-82/83 and 84 with guidance units
NAVAIR 01-90TBA-1	AQM-37C Target
NAVAIR 01-265GMAD-9-4	MIM AIM-7 Series SPARROW
NAVAIR 01-700	Airborne Weapons/Stores Manuals/Checklist Publication Index
NAVAIR 11-1-116B	Navy Ammunition Logistics Codes (also issued as TW010-AA-ORD-030)
NAVAIR 11-1-119	Ammunition for Navy 20mm/25mm Aircraft Guns
NAVAIR 11-1F-2	Description and Characteristics Airborne Bomb and Rocket Fuze Manual
NAVAIR 11-5A-17	Aircraft Bombs, Fire Bombs, Practice Bomb Fuzes and Associated Components
NAVAIR 11-5A-32	Intermediate Maintenance Weapons Station (WPNSTA) W/IPB, Aircraft General Purpose Bombs, Fire Bombs, Practice Bombs and Components

PUBLICATION NUMBER	TITLE
NAVAIR 11-5A-34	Intermediate Maintenance Weapons Station (WPNSTA) W/IPB, Dispenser and Mine Aircraft Weapon CBU-78 Series (GATOR)
NAVAIR 11-5A-35	Intermediate Maintenance Weapons Station (WPNSTA) W/IPB, Cluster Bomb Units MK20 MODs 3, 6, 7, 8, 9, 10, 11, 12 CBU-99 Series and CBU-100 Inert and Explosive Loads
NAVAIR 11-5A-38	JDAM/Laser JDAM
NAVAIR 11-15-7	Pyrotechnics Screening and Marking Devices
NAVAIR 11-70DA-1	UH1N Defensive Armament Subsystem A/A49E-11, Organizational and Intermediate Maintenance Instructions
NAVAIR 11-75-63	Launchers, Single Bay LMU-23/E and Four Bay LMU-24/E (for Smokey Sam)
NAVAIR 11-75A-54	Guided Missile Launcher, LAU-7A
NAVAIR 11-75A-59	Missile Launcher Adapter ADU-299 Intermediate Maintenance Instruction
NAVAIR 11-75A-73	Aircraft Bomb Rack, BRU-20, BRU-22, BRU-23 Organizational and Intermediate Maintenance Instructions
NAVAIR 11-75A-90	TOW Missile Launcher Organizational and Intermediate Maintenance Instructions
NAVAIR 11-75A-92	Airborne Rocket Systems 2.75” and 5.0” Rocket Launcher (LAU-10/61/68 and 69 Series)
NAVAIR 11-75AA-44	Dispenser, Parachute Flare, Various SUU-44/A
NAVAIR 11-75AA-48	Dispenser SUU-25F/A
NAVAIR 11-75BGM-71-1	Intermediate Inspection Maintenance and Packaging Procedures for TOW
NAVAIR 11-85M-2	Rocket Motors (JATO) Description, Safety, Service, and Handling Instructions
NAVAIR 11-95-13	Aircraft Machine Gun, .50 Caliber, XM-218 Organization and Intermediate Maintenance Manual W/IPB
NAVAIR 11-95DAFD-1	Maintenance with IPB for the DAFD2001
NAVAIR 11-95GAU-17-1	GAU-17/A Machine Gun Organization Maintenance Instructions
NAVAIR 11-95MAU-1	MAU-201 Feeder DeLinker Organizational Maintenance Instructions

PUBLICATION NUMBER	TITLE
NAVAIR 11-95M61A1-1	M61A1 20mm Automatic Gun Maintenance Instructions
NAVAIR 11-95M240D1-1	Organizational Maintenance Manual w/IPB Aircraft Machine Gun
NAVAIR 11-95M60-1	Gun 7.62mm Aircraft Machine Gun, M60 Mods C/D, Organizational and Intermediate Maintenance w/IPB
NAVAIR 11-95M89-1	M89 Declutching Feeder Maintenance Instructions
NAVAIR 11-95M197-1	M197 20mm Automatic Gun Maintenance Instructions
NAVAIR 11-100-1	Cartridges and Cartridge Actuated Devices
NAVAIR 11-100-1.1.1CD	Cartridge and Cartridge Actuated Devices (CADs) for Aircraft and Associated Equipment General Use
NAVAIR 11-100-1.2	Cartridge and Cartridge Actuated Devices (CADs) for Unique Systems
NAVAIR 11-100-1.3	Cartridge and Cartridge Actuated Devices (CADs) for Bomb Racks/Launchers, Bomb Dummy Units, and Airborne Missile Systems
NAVAIR 11-120A-1.1 (Volume 1)	Weapons Packaging, Handling, Stowage Shipboard
NAVAIR 11-120A-1.2 (Volume 2)	Airborne Weapons Packaging and Handling
NAVAIR 11-120-7	Ship Weapon Installation Manual, Bomb Cluster Anti-Tank Mk 20 Mods 2, 3, 4 and 7 Rockeye II
NAVAIR 11-120-8	Ship Weapon Installation Manual, Bomb Assembly Platform Stand
NAVAIR 11-120-15	Ship Weapon Installation Manual, Rocket, 5.0 inch Forward Fired Rocket, ZUNI
NAVAIR 11-120-20	Ship Weapon Installation Manual Airborne Pyrotechnics and Expendable Countermeasures
NAVAIR 11-120-23	Ship Weapon Installation Manual, Guided Missile SIDEWINDER AIM-9 Series
NAVAIR 11-120-25	Ship Weapon Installation Manual, Bombs, Low Drag Mk 82
NAVAIR 11-120-30	20MM Ammunition, M50 Configuration and MK 100 Series, Ship Weapons Installation Manual
NAVAIR 11-120-35	Ship Weapon Installation Manual, Gun System M61A1 20mm

PUBLICATION NUMBER	TITLE
NAVAIR 11-120-48	20MM Aircraft Gun Pod GPU-2/A, Ship Weapon Installation Manual
NAVAIR 11-120-55	Ship Weapon Installation Manual, Bomb Unit Cluster CBU-78/B GATOR
NAVAIR 11-120-58	Ship Weapon Installation Manual, Laser Guided Missile AGM-65E and Infrared Guided Missile AGM-65F
NAVAIR 11-120-59	Ship Weapon Installation Manual, Aircraft Parachute Flare LUU-2B/B and Flare Dispenser SUU-25F/A
NAVAIR 11-120-60	Ship Weapon Installation Manual, 2.75 inch Folding Fin Aircraft Rocket
NAVAIR 11-120-62	AGM-114 Laser Guided Missile (Hellfire), Ship Weapon Installation Manual
NAVAIR 11-120-66	Ship Weapon Installation Manual, 25mm Gun System (A/A49E-10)
NAVAIR 11-120-79	JSOW (AGM-154), Ship Weapon Installation Manual
NAVAIR 11-140-1	Rapid Rearm Manual
NAVAIR 11-140-5	Airborne Weapons Assembly Manual, Bombs
NAVAIR 11-140-5-1	Airborne Weapons Assembly Checklist/Bombs, Bomb Fins, Fuzes and Practice Bombs
NAVAIR 11-140-6.1	Airborne Weapons Assembly Manual Air Launched Guided Missiles and Selected Vehicles-Volume I Air-Intercept Missiles (Tactical) Organizational and Intermediate Maintenance Activities
NAVAIR 11-140-6.2	Airborne Weapons Assembly Manual Air Launched Guided Missiles and Selected Vehicles-Volume II Air-Ground Missiles (Tactical) Organizational and Intermediate Maintenance Activities
NAVAIR 11-140-6.2-3	TOW
NAVAIR 11-140-6.2-7	HELLFIRE Surface Attack Guided Missile (AGM-114B)
NAVAIR 11-140-6.2-14	Airborne Weapons Assembly Checklist, AGM-154 (JSOW)
NAVAIR 11-140-6.3	Airborne Weapons Assembly Manual Air Launch Guided Missiles and Selected Vehicles-Volume III Training Missiles/ Vehicles Organizational and Intermediate Maintenance Activities
NAVAIR 11-140-9	Airborne Weapons Assembly Manual, Cluster Bombs

PUBLICATION NUMBER	TITLE
NAVAIR 11-140-10	Airborne Weapons Assembly Manual, LGBs/GBUs for Fleet Maintenance Activities
NAVAIR 11-140-25	Armament Weapons Support Equipment (AWSE) Configuration Manual
NAVAIR 17-1-108	Torque Tools, Use, Care and Testing Instructions
NAVAIR 17-1-125	Ground Support Equipment (GSE) Corrosion Control Maintenance Instruction, Organizational, and Intermediate Support Equipment Cleaning and Corrosion Control Manual
NAVAIR 17-1-127	Weapon Support Equipment, Periodic Proof Testing of, Intermediate Maintenance w/IPB
NAVAIR 19-15-27	Platform Stand, Small Bomb Assembly Operational and Intermediate Instructions W/IPB
NAVAIR 19-15BC-12	Bomb Skid Assembly, AERO 12C, Organizational and Intermediate Maintenance Instructions w/IPB
NAVAIR 19-15BC-13	AERO-21A Weapon Skid
NAVAIR 19-15BD-6	Single Hoist Ordnance Loading System (SHOLS) AERO-91A, Adapter Assembly Operational and Intermediate Instructions W/IPB
NAVAIR 19-25D-20	Air Nitrogen Purifier, Mk 1 Mod 0 and Mk 2 Mod 0, Operational, Service, and Overhaul Instructions w/IPB
NAVAIR 19-25E-43	A/M32K-4 Rough Terrain Trailer
NAVAIR 19-25E-63	MHU-151/M Munitions Trailer
NAVAIR 19-25E-66	Munitions Transported MHU-191 Operational and Intermediate Instructions
NAVAIR 19-100-1.1	Approved Ordnance Handling Equipment
NAVAIR 19-100-2	Airborne Weapons Handling Equipment (Shipboard)
NAVAIR 19-100-3	Weapons Support Equipment General Adapters, Operation and Intermediate Maintenance Instructions w/IPB
NAVAIR 19-600-25E-509	Pre-op MHU-171/E Trailer
NAVAIR 19-600-63-6-1/-4	PMS/Pre-op Aero 51 Bomb Trailer
NAVAIR 19-600-96-6-1	Pre-op Checklist Bomb Skid AERO-12 B/C
NAVAIR 19-600-96-6-2	Calendar Maintenance Requirements Cards Bomb Skid, AERO-12B/C

PUBLICATION NUMBER	TITLE
NAVAIR 19-600-101-6-1/-4	PMS/Pre-op Mk 7 Mods 3 & 4 Bomb Trailer
NAVAIR 19-600-145-6-1/-2	PMS/Pre-op Munitions Set A/M32K-5
NAVAIR 19-600-148-6-1/-2	PMS/Pre-op Linkless Ammunition Loading System
NAVAIR 19-600-162-6-1/-2	PMS/Pre-op MHU-126/M Small Munitions Trailer
NAVAIR 19-600-169-6-1/-2	PMS/Pre-op AERO-61 Sting
NAVAIR 19-600-185-6-1/-2	PMS/Pre-op MHU-151/M Munitions Trailer
NAVAIR 19-600-226-6-1	PMS/Pre-op Checklist Munitions Trailer MHU-191
NAVAIR 19-600-226-6-2	PMS Munitions Trailer MHU-191
NAVAIR 19-600-284-6-1	Pre-op A/S32A-30 Tow Tractor
NAVAIR AW-394YB-MIB-000	Aircraft Guided Missile Launcher M272, Organizational and Intermediate Maintenance
NAVAIR AW-820YB-MIB-100	Hellfire Surface Attack AGM-114B/K
NAVAIRINST 4120.1A	Specification and Standard Preparation and Implementation of the Defense Standardization and Specification Program
NAVAIRINST 4350.2C	Procurement and Utilization of Engineering and Technical Services
NAVAIRINST 4460.1D	Policy and Procedures for Air Launched Missile Repairable Material Movement
NAVAIRINST 5400.14C	The Cognizant Field Activity Program
NAVAIRINST 5451.87F	Technical Support Assignments to Naval Air Systems Command
NAVAIRINST 13070.7	Policy Guidance for Warranty Application on Naval Air Systems Command Weapon System Procurements Assigns Responsibilities for the Application of Warranties
NAVAIRINST 13640.1B	Naval Aviation Metrology and Calibration (METCAL) Program
NAVAIRINST 13650.1C	Naval Air Systems Command Aircraft Maintenance Material Readiness List (AMMRL) Program
NAVAIRINST 13680.1	Depot Level Rework Program for Support Equipment End Item
NAVCOMPINST 7040.37B	Guidance for Administration of Appropriations After the Period of Availability Weapons Procurement, Navy (WPN)
NAVORD OP 1014	Ordnance Safety Precautions, Their Origin and Necessity

PUBLICATION NUMBER	TITLE
NAVSEAINST 5400.57B	Engineering Agent Selection Assignment Responsibility Tasking and Appraisal
NAVSEAINST 8010.2	Ammunition Lot Numbers and Data Cards
NAVSEAINST 8020.8B	Department of Defense Ammunition and Explosives Hazard Classification Procedures
NAVSEAINST 8020.5C	Qualification and Final Qualification Procedures for Navy Explosives
NAVSEAINST 8020.6D	Navy Weapon System Safety Program Safety Approval (WSESRB)
NAVSEAINST 8027.02A	Demilitarization/Disposal Requirements Relating to the Design of the New or Modification of Ammunition Items
NAVSEA OP 4	Ammunition and Explosive Safety Afloat
NAVSEA OP 5	Ammunition and Explosives Safety Ashore Regulations for Handling, Storing, Production, Renovation, and Shipping (Volume I)
NAVSEA OP 2173	Approved Handling Equipment for Weapons and Explosives; Adapters through Jigs (Volume I), Latches through Trucks (Volume II)
NAVSEA OP 2217	Miscellaneous Chemical Munitions
NAVSEA OP 2793	Toxic Hazards of Pyrotechnics
NAVSEA OP 3192	Missile Transfer Dolly Mk 6 Mods 1-4
NAVSEA OP 3206	Handling and Stowage of Naval Ordnance Aboard Ammunition Ships Material Handling Equipment (Volumes I, II, and III)
NAVSEA OP 3317	Fire Fighting Equipment
NAVSEA OP 3565/ NAVAIR 16-1-529	Electromagnetic Radiation Hazards (Hazards to Personnel, Fuel, and Other Flammable Material (Volume I), (Hazards to Ordnance) (Volume II) HERO Manual
NAVSEA OP 4016	Truck, Handlift, MK45 MOD 0/1: D.O.M. W/IPB
NAVSEA OP 4098	Ammunition Handling, Explosives, and Hazardous Material with Industrial Materials Handling Equipment (MHE)
NAVSEA OP 4154	Close In Weapons System, MK-15 MOD 1 through 4 and 6 (PHALANX, Introduction to CIWS)

PUBLICATION NUMBER	TITLE
NAVSEA OP 4550	Handling and Storage of Amphibious Assault Ammunition Aboard Amphibious Ships
NAVSEA OP 4461	On-Station Movement Ammunition and Explosives by Truck and Railcar
NAVSEA S0005-AA-PRO-010	Technical Manual Management Program, Operations and Procedures Manual
NAVSEA S9086-XG-STM-000/ CH-700R2	Weapons Handling Equipment Inspection and Test
NAVSEA S9570-AA-MMA-010	Underway Replenishment Ordnance Handling Equipment and Transfer Units Handling and Transfer Procedures
NAVSEA S9570-AD-CAT-101	UNREP Hardware and Equipment Manual
NAVSEA S9571-AA-MMA-010	Underway Weapon Replenishment Ordnance Handling Equipment and Transfer Units Vol. II L-Class Ships (Underway)
NAVSEA SG420-AP-MMA-010	Periodic Testing Arrangements for Ordnance Handling Equipment
NAVSEA SG420-B5-WHS-010	Technical Manual for Handling and Stowage of Air Launched Weapons Aboard Amphibious Ships
NAVSEA SG420-B5-WHS-101	Weapons Handling Procedures Afloat
NAVSEA SW010-AF-ORD-010	Identification of Ammunition
NAVSEA SW020-AC-SAF-010	Transportation and Storage Data for Ammunition, Explosives and Related Hazardous Material (Volume I & II)
NAVSEA SW020-AF-ABK-010	Motor Vehicle and Railcar Shipping, Inspection Manual for Ammunition, Explosives, and Other Hazardous Materials
NAVSEA SW010-AD-GTP-010	Small Arms and Special Warfare Ammunition, Description and Maintenance
NAVSEA SW010-AF-ORD-010	Identification of Ammunition
NAVSEA SW020-AF-HBK-010	Drivers and Inspectors Manual
NAVSEA SW020-AG-SAF-010	Transportation and Storage Data for Ammunition, Explosives and Related Hazardous Materials
NAVSEA SW023-AA-ORD-030	Shipboard Ammunition and Weapons Data
NAVSEA SW023-AG-WHM-010	On-Station Transportation of Ammunition

PUBLICATION NUMBER	TITLE
NAVSEA SW023-AH-WHM-010	Handling Ammunition, Explosives and Hazardous Material with Industrial Material Handling Equipment (MHE) (formerly OP-4098)
NAVSEA SW023-AJ-WHS-010	Handling and Stowage of Amphibious Assault Ammunition Aboard Amphibious Assault Ships (formerly OP-4550)
NAVSEA SW030-AA-MMO-010	Navy Gun Ammunition
NAVSEA SW050-AB-MMA-010	Pyrotechnic, Screening, Marking, and Countermeasure Devices
NAVSEA SW050-AB-MMA-020	Pyrotechnic Screening and Marking Devices (Volume 2)
NAVSEA SW050-AC-ORD-010	Toxic Hazards Associated with Pyrotechnic Items
NAVSEA SW060-AA-MMA-010	Demolition Material (Volume 1)
NAVSEA SW060-AA-MMA-020	Demolition Material (Volume 2)
NAVSEA SW073-AC-MMA-010	Miscellaneous Chemical Munitions, Depot and Organization Level
NAVSEA SW0231-AG-WHM-010	On-Station Movement of Ammunition and Explosives by Track and Railcar Vol. III
NAVSEA SW0231-AH-WHM-010	Handling Ammunition, Explosives and Hazardous Materials with Industrial Materials Handling Equipment (MHE)
NAVSEA SW0300-BC-SAF-010	Safety Manual for Clearing Live Ammunition from Guns
NAVSEA TO-300-AM-ORD-010	Weapons and Combat Systems Quality Assurance Requirements for Shore Stations and Engineering Agents (Volume III)
NAVSUP P-409	MILSTRIP/MILSTRAP Desk Guide
NAVSUP P-484	Supply Afloat Fleet and Field Packaging Procedures
NAVSUP P-485	Naval Supply Procedures Vol. 1 Parts 1 and 2 Afloat Supply
NAVSUP P-505	Preparation of Hazardous Material for Military Air Shipment Packaging and Handling of Dangerous Materials for Transportation by Military Aircraft
NAVSUP P-723	Navy Inventory Integrity Procedures
NAVSUP P-724	Conventional Ordnance Management Policies and Procedures
NAVSUP P-801	Notice of Ammunition Reclassification (NAR) (formerly NAVAIR TW024-AA-ORD-010)
NAVSUP P-802	Navy Ammunition Logistic Code
NAVSUP P-803	Stocklist of Navy Conventional Ammunition

PUBLICATION NUMBER	TITLE
NAVSUP P-804	Stocklist of Navy Conventional Ammunition Data Supplement Cataloging Responsibilities
NAVSUP P-805	Inspection Requirements for Receipt, Segregation, Storage and Issue of Navy and Marine Corps Conventional Ammunition; Receipt, Storage and Issue Cataloging Responsibilities
NAVSUP P-806	Inspection Requirements for Receipt, Segregation, Storage and Issue of Navy and Marine Corps Conventional Ammunition; Segregation Sentencing
NAVSUP P-807	Naval Ordnance Quality Assurance (QA) Program
NAVSUP 2002	Navy Stock List of Publication, Forms, and Directives
NAVSUP 4000	Introduction to Federal Supply Catalog and Related Publications
NAVSUP 4105	List of Items Requiring Special Handling
NAVSUP 4107	Master Repairable Item List (MRIL)
NAVSUPINST 4421.20	Advanced Traceability and Control (ATAC) Retrograde Depot Level Repairables (DLR) Program Turn-In Procedures
NAVSUPINST 4423.14B	Naval Material Command (NMC) Uniform Source, Maintenance, and Recoverability (SM&R) Codes
NAVSUPINST 4440.115F	Physical Inventory Program
NAVSUPINST 4440.132A	Inventory Accuracy Office Program
NAVSUPINST 4440.160A	Policy for Management of Authorized Stock Levels (Fixed Allowances) for Navy Depot Level and Field Level Repairables
NAVSUPINST 4440.179A	Report of Discrepancy (ROD) Manual, The Navy's Governing Instruction for RODs
NAVWEPS 19-35-22	Parts Lists for Air-Cooled High Pressure Air Compressors
NAVWEPS 19-35-23	Operating Instruction For Model 4R15 High Pressure Compressor
NSTM S9086-XG-STM-010/ CH 700	Shipboard Ammunition Handling and Stowage
NSTM S9086-ZN-STM-000/ CH 772	Instruction Book for Cargo and Weapons Elevators
NSTM S9522-AA-HBK-010	Instruction Book for Magazine Sprinkler Systems
NWP 4-01.4	Underway Replenishment
NWP-14	Replenishment at Sea

PUBLICATION NUMBER	TITLE
NWP-14-1	Weapons Replenishment
NWP 3-04.1M (formerly NWP-42)	Shipboard Helicopter Operating Procedures
NWP 42G	Safety and Protection of Ship, Material, and Personnel
OPNAVINST 1540.2E	Naval Aviation Maintenance Training (NAMTRA) Program
OPNAVINST 3100.6J	Special Incident Reporting (OPREP-3, Navy Blue and Unit SITREP) Procedures
OPNAVINST 3120.32C	Standard Organization and Regulations of the U.S. Navy
OPNAVINST 4000.79B	Policy for U.S. Navy Support of the U.S. Coast Guard
OPNAVINST 4441.12C	Retail Supply Support of Naval Activities and Operating Forces Fixed Allowances for Depot and Field Level Repairables
OPNAVINST 4614.1G	Uniform Material Movement and Issue Priority System (UMMIPS)
OPNAVINST 4790.2H (COMNAVAIRFORINST 4790.2 series)	The Naval Aviation Maintenance Program
OPNAVINST 5090.1C	Environmental and Natural Resources Program Manual
OPNAVINST 5100.23G	Navy Occupational Safety and Health (NAVOSH) Program Manual for Forces Afloat
OPNAVINST 5102.1D Ch 1/ MCO P5102.1B Ch 1	Navy and Marine Corps Mishap and Safety Investigation Reporting and Record Keeping Manual Mishap
OPNAVINST 5442.2G	Aircraft Inventory Reporting System (AIRS)
OPNAVINST 5513.1F	Department of the Navy Security Classification Guides
OPNAVINST 5530.13C	Department of the Navy Physical Security Instruction for Conventional Arms, Ammunition, and Explosives (AA&E)
OPNAVINST 5530.14E w/Ch 1	Navy Physical Security and Law Enforcement Program
OPNAVINST 8011.9A	Non-Nuclear Ordnance Requirements (NNOR) Process
OPNAVINST 8020.14/ MCO P8020.11	Department of the Navy Explosives Safety Policy Manual w/Interm Change dtd 14 June 2005
OPNAVINST 8023.24B	Navy Personnel Ammunition and Explosives Handling Qualification and Certification (QUAL/CERT) Program
OPNAVINST 8027.6E	Naval Responsibilities for Explosive Ordnance Disposal (EOD)

PUBLICATION NUMBER	TITLE
SECNAVINST 3960.6	Metrology Automated System for Uniform Recall and Reporting (MEASURE) Users Manual
SECNAVINST 4855.3B	Product Data Reporting and Evaluation Program (PDREP) Acquisition Engineering Agent/Report of Discrepancy
SECNAVINST 4855.5B	Product Quality Deficiency Report Program
SECNAVINST 5000.2D	Implementation and Operation of the Defense Acquisition Programs and the Joint Capability Integration and Development System
SECNAVINST 5210.8E	DON Records Management Program
SECNAVINST 5450.4E	Assignment and Distribution of Authority and Responsibilities for the Administration of Shore Activities of the DON, and Coordination of Naval Personnel Located Ashore
SECNAVINST 5500.29C	Use of Deadly Force and the Carrying of Firearms by Personnel of the Department of the Navy in Conjunction with Law Enforcement, Security Duties and Personal Protection
SECNAVINST 5510.30M	DON Personnel Security Program
SW012-AA-MMA-010-020	Ordnance Information System (OIS), Complete Round Dictionary
SW020-AD-SAF-010	Transportation and Storage Data for Ammunition, Explosives and Related Hazardous Material
SW023-AA-ORD-030	Shipboard Ammunition and Weapons Data
Title 10, U.S. Code, Section 161	Presidential Authorization for Establishment of Specified Combatant Commands to Perform Military Missions
Title 10, U.S. Code, Section 5033	Assigns Responsibility to CNO, Personnel, and Material Requirements
Title 10, U.S. Code, Section 2303	Warranties
U.S. ARM FM 3-22.68	Crew-Served Machine Gun, 5.56mm and 7.62mm
U.S. ARM FM 23-65	Browning Machine Gun, .50 Caliber HB, M-2 Operation and Maintenance

APPENDIX C

Management Information Coding Lists

APPENDIX C

Management Information Coding Lists

Table of Contents

Figure	Title	Page
C-1	Julian Date Calendar	C-1
C-2	JCN Serial ID Code and Lead Component	C-3
C-3	Missile Support Equipment Designation and Nomenclature	C-4
C-4	Missile Operation Codes	C-5
C-5	Missile Support Equipment Operational Codes	C-6
C-6	Source Codes	C-7
C-7	Test/Inspection Result Codes	C-9
C-8	Disposition Codes	C-11
C-9	Failure Category Codes	C-13
C-10	Status Codes (Test Equipment)	C-19
C-11	Country/Ownership Codes	C-20

Perpetual

DAY	JAN	FEB	MAR	APR	MAY	JUN	JUL	AUG	SEP	OCT	NOV	DEC	DAY
1	001	032	060	091	121	152	182	213	244	274	305	335	1
2	002	033	061	092	122	153	183	214	245	275	306	336	2
3	003	034	062	093	123	154	184	215	246	276	307	337	3
4	004	035	063	094	124	155	185	216	247	277	308	338	4
5	005	036	064	095	125	156	186	217	248	278	309	339	5
6	006	037	065	096	126	157	187	218	249	279	310	340	6
7	007	038	066	097	127	158	188	219	250	280	311	341	7
8	008	039	067	098	128	159	189	220	251	281	312	342	8
9	009	040	068	099	129	160	190	221	252	282	313	343	9
10	010	041	069	100	130	161	191	222	253	283	314	344	10
11	011	042	070	101	131	162	192	223	254	284	315	345	11
12	012	043	071	102	132	163	193	224	255	285	316	346	12
13	013	044	072	103	133	164	194	225	256	286	317	347	13
14	014	045	073	104	134	165	195	226	257	287	318	348	14
15	015	046	074	105	135	166	196	227	258	288	319	349	15
16	016	047	075	106	136	167	197	228	259	289	320	350	16
17	017	048	076	107	137	168	198	229	260	290	321	351	17
18	018	049	077	108	138	169	199	230	261	291	322	352	18
19	019	050	078	109	139	170	200	231	262	292	323	353	19
20	020	051	079	110	140	171	201	232	263	293	324	354	20
21	021	052	080	111	141	172	202	233	264	294	325	355	21
22	022	053	081	112	142	173	203	234	265	295	326	356	22
23	023	054	082	113	143	174	204	235	266	296	327	357	23
24	024	055	083	114	144	175	205	236	267	297	328	358	24
25	025	056	084	115	145	176	206	237	268	298	329	359	25
26	026	057	085	116	146	177	207	238	269	299	330	360	26
27	027	058	086	117	147	178	208	239	270	300	331	361	27
28	028	059	087	118	148	179	209	240	271	301	332	362	28
29	029		088	119	149	180	210	241	272	302	333	363	29
30	030		089	120	150	181	211	242	273	303	334	364	30
31	031		090		151		212	243		304		365	31

Figure C-1. Julian Date Calendar

Leap Year Only

DAY	JAN	FEB	MAR	APR	MAY	JUN	JUL	AUG	SEP	OCT	NOV	DEC	DAY
1	001	032	061	092	122	153	183	214	245	275	306	336	1
2	002	033	062	093	123	154	184	215	246	276	307	337	2
3	003	034	063	094	124	155	185	216	247	277	308	338	3
4	004	035	064	095	125	156	186	217	248	278	309	339	4
5	005	036	065	096	126	157	187	218	249	279	310	340	5
6	006	037	066	097	127	158	188	219	250	280	311	341	6
7	007	038	067	098	128	159	189	220	251	281	312	342	7
8	008	039	068	099	129	160	190	221	252	282	313	343	8
9	009	040	069	100	130	161	191	222	253	283	314	344	9
10	010	041	070	101	131	162	192	223	254	284	315	345	10
11	011	042	071	102	132	163	193	224	255	285	316	346	11
12	012	043	072	103	133	164	194	225	256	286	317	347	12
13	013	044	073	104	134	165	195	226	257	287	318	348	13
14	014	045	074	105	135	166	196	227	258	288	319	349	14
15	015	046	075	106	136	167	197	228	259	289	320	350	15
16	016	047	076	107	137	168	198	229	260	290	321	351	16
17	017	048	077	108	138	169	199	230	261	291	322	352	17
18	018	049	078	109	139	170	200	231	262	292	323	353	18
19	019	050	079	110	140	171	201	232	263	293	324	354	19
20	020	051	080	111	141	172	202	233	264	294	325	355	20
21	021	052	081	112	142	173	203	234	265	295	326	356	21
22	022	053	082	113	143	174	204	235	266	296	327	357	22
23	023	054	083	114	144	175	205	236	267	297	328	358	23
24	024	055	084	115	145	176	206	237	268	298	329	359	24
25	025	056	085	116	146	177	207	238	269	299	330	360	25
26	026	057	086	117	147	178	208	239	270	300	331	361	26
27	027	058	087	118	148	179	209	240	271	301	332	362	27
28	028	059	088	119	149	180	210	241	272	302	333	363	28
29	029	060	089	120	150	181	211	242	273	303	334	364	29
30	030		090	121	151	182	212	243	274	304	335	365	30
31	031		091		152		213	244		305		366	31

Figure C-1. Julian Date Calendar - contd.

JCN SER ID (Block 1.C)	Weapon (AUR) Support Equipment Type	Lead Component (Note 1)
1.	TEST EQUIPMENT	-----
2a.	SIDEWINDER, AIM-9M	Guidance and Control Section
2b.	SIDEWINDER, AIM-9X	AUR (Note 2)
3.	SPARROW	Guidance Section
4.	LGB/GBU	Computer Control Group
5.	HARPOON/SLAM-ER	Warhead/Exercise Section
6.	HARM	Warhead Section
7.	AARGM	Guidance Section
8.	(Reserved-Containers)	-----
9.	MAVERICK	Guidance and Control Section
10.	HELLFIRE	(Note 3)
11.	MK 80 SERIES, L.D.G.P Bombs and Components	-----
12.	AMRAAM	(Note 3)
13.	TOW	
14.	TOMAHAWK	

Notes:

1. The AUR serial number is the same as the lead component serial number. The JCN serial number is associated with the weapon type shown. JCN SER ID number 02 and greater correspond to individual volumes of the Industrial Processing Guide, including those that are tentative and unknown.
2. AIM-9X, No lead component, a unique serial number is assigned to each AUR.
3. AMRAAM/HELLFIRE: No lead component, an AUR unique serial number is assigned to each AUR and is located on the propulsion section nomenclature plate.

Figure C-2. JCN Serial ID Code and Lead Component

DESIGNATION	NOMENCLATURE
SPARROW TEST EQUIPMENT	
AN/DSM-156D	MISSILE TEST SET
HARM TEST EQUIPMENT	
AN/DSM-160	MISSILE TEST SET
AN/GSM-396A	GUIDED MISSILE-LAUNCHER TEST SET
AARGM TEST EQUIPMENT	
AN/GYQ-79 (CMBRE+)	MISSILE TEST SET
MX12307/GYQ-79A	I-LEVEL BIT CONFIGURATION
MX12348/USM	D-LEVEL AUR TEST
SIDEWINDER AIM-9M TEST EQUIPMENT	
SMART	RATE TABLE (OR SED SMART)
AN/DSM-98(V)	FIRING CIRCUIT CONTINUITY TESTER
TA-3037	UMBILICAL CABLE TESTER
AN/DSM-152	GUIDANCE CONTROL SYSTEM TEST SET
NOS 24064	NOZZLE PRESSURE TESTER
NPP 6925	PRESSURE INTEGRITY TESTER
17-15AN/USM-703-1	AIM-9M/CATM-9M GCS TEST SET
EOP-JXQTL-PTS-15	PORTABLE TEST SET DSU-15 SERIES
SIDEWINDER AIM-9X TEST EQUIPMENT	
AN/GYQ-79/ AN/GYQ-79A	DIGITAL COMPUTER SET (DCS)
TTU-574/E24A/ADU-891 (V) 1/E	AIM-9X TEST PROGRAM SET (TPS)
HARPOON TEST EQUIPMENT	
AN/DSM-127	MISSILE SUBSYSTEM TEST SET
C/CTS	CAPSULE/CANISTER TEST
BMCTS	BOOSTER MOTOR CIRCUITRY TEST SET
PICTS	PYRO INTERFACE CIRCUITRY TEST SET
SLAM-ER TEST EQUIPMENT	
AN/DSM-127C	MISSILE SUBSYSTEM TEST SET
PICTS	PYRO INTERFACE CIRCUITRY TEST SET
MAVERICK TEST EQUIPMENT	
TTU-519/E	AUR MISSILE TEST SET
SMU-127/E	LASER TARGET TEST SET
SM-787/DSM	INFRARED SIMULATOR
AMRAAM TEST EQUIPMENT	
AN/GYQ-79A	MISSILE TEST SET
ADU-891(V)1/E	SWITCH BOX FOR AMRAAM

Figure C-3. Missile Support Equipment Designation and Nomenclature

MISSILE OPERATION CODES

Visual Tests

Incoming Visual Inspection Missile/Section/Component/Container	IV
Other Visual Inspection (e.g., AWB or NAR)	OV
Missile Sentencing Inspection/RSS&I	MS

Functional Tests

Continuity Test (Squib Check)	CT
Null Voltage Test	NV
Incoming Test of Missile/Section New production/fleet return/DOP return	IT
Leak Test	LT
Pressure Test	PT
Ultra Sonic Test	UT
X-Ray Test	XR
Retest (Explain in Narrative)	RT
Other Test (Explain in Narrative)	OT
Verification Test (QEA)	VT

Maintenance and Repair

Remove (Section or Component)	RM
Install (Section or Component)	IN
Disassemble (AUR)	DS
Assemble (AUR)	AS
TD Installed	TD
Repair Component (Explain in Narrative)	RP
Other Maintenance (Explain in Narrative)	OM

Other Reportable Operations

Condition Code Change	CC
Calibration (Test Equipment)	CA
Troubleshooting (Test Equipment)	TS
Adjustment	AD

Figure C-4. Missile Operation Codes

MISSILE SUPPORT EQUIPMENT OPERATIONAL CODES

Operation	Code
Adjustment Made to Correct Test Equipment	AE
Air System Check	AC
Awaiting Other (Specify In Narrative)	AO
Awaiting Part	AP
Awaiting Service Representing	AS
Calibration or Alignment of Test Equipment at Calibration Laboratory	CL
Calibration or Alignment of Test Equipment in Place	CP
Cannibalization of a Unit by Removal of Parts	CN
Coolant Oil Sample	OS
Filtering	FL
Installation After Calibration	CI
Modification of Test Equipment in Accordance with a Requirement	ME
Periodic Test or Inspection in Accordance with a Requirement	PM
Removal and Installation of Drawer / Subassembly / Card / Component	RI
Removal of Drawer / Subassembly / Card / Component	RM
Removal for Calibration	CR
Repair of a Component in Place	RP
Repair and Accomplishment of Corrective Action	RC
Reseat / Remate of Connector / Card / Component	RS
Retest after a Test Failure	RF
Self Test	ST
Test of Inspection of an Item Following Repair	TR
Troubleshooting Test Equipment for Problems	TS

Figure C-5. Missile Support Equipment Operational Codes

Source Codes

Fleet Returned Units

Code	Definition
FF	Captive Flown Missile, Damaged. A missile/section which was captive flown during its deployment. Fleet inspection or test identified some defect which requires corrective maintenance.
FC	Captive Flown Missile, Undamaged. A missile/section which was captive flown during its deployment. Fleet inspection or testing identified no defect which would make the missile unsuitable for operational use. The Maintenance Due Date (MDD) may or may not be expired.
FX	Deep Stowed Missile, Damaged. A missile/section which was deep stowed during its deployment and is suspected to be damaged or contaminated.
FN	Deep Stowed Missile, Undamaged (Long Term MDD). A missile/section which was deep stowed during its deployment and has an unexpired MDD. Fleet records do not indicate missile was subject to damage or contamination.
FE	Deep Stowed Missile, Undamaged (Short Term MDD). A missile/section which was deep stowed during its deployment and is being returned because its MDD has (or soon will be) expired. Fleet records do not indicate physical damage or contamination.
FD	Ready Service Missile, Damaged. A missile/section which was placed in a ready service magazine but was not captive flown during its deployment. Fleet inspection or testing identified some defect which requires corrective action.
FS	Ready Service Missile, Undamaged. A missile/section which was placed in a ready service magazine but was not captive flown during its deployment. Fleet inspection or testing identified no defects which make the missile unsuitable for operational use. The MDD may or may not be expired.
FU	Deployment History Unknown. A missile/section whose deployment history is unknown.

Figure C-6. Source Codes

SOURCE CODES

Non-Fleet Returned Units

Code	Definition
NP	New Production Unit. Used only on initial inspection, test, or retest of unit upon receipt from the manufacturer.
SP	New Supply Unit (Spare). Used when a unit is installed as a replacement in a missile/section whose source is other than new production.
ST	Unit Removed From Ready-for-issue Storage. Used for units that have been tested and placed in ready-for-issue storage and removed for use or test.
RP	Repaired Unit From Designated Overhaul Point. Used for all units returned from a designated overhaul point. Repaired units that are placed in storage upon receipt without test should show a repair point source code.
NW	Repaired Unit From New Production (Warranty). Used for manufacturer-repaired new units under a warranty program.
NR	Repaired Unit From New Production (Non-warranty). Used for manufacturer-repaired new units not under a warranty program.
RW	Repaired Unit From On Station Repair. Used to report units repaired locally.
MD	Unit Returned From Local Modification. Used only for initial inspection, test, or retest of a unit which was modified locally as a part of an established modification program.
TP	Unit Returned From Special Test Program. Used for inspection, test, or retest of a unit returned from a special test program.
QE	Unit Returned From An Ordnance Assessment Activity. Used for a unit inspected or tested upon return from an ordnance assessment activity, prior to shipment to a designated overhaul point or placement in storage.
WS	Unit Received From Another Weapons Station. Used only for a unit received from another Weapons Station in ready-for-issue condition.
IP	In Place Repaired Units. Used for all units repaired in place at test station (as a result of on-site failure).

Figure C-6. Source Codes - contd.

Test/Inspection Result Codes

Construct a 3-character code to represent the result of any test or inspection as follows:

In the first position list the simple test/inspection result; in the second position identify specific problem area as listed; in the third position record conditions if any. Describe exceptions in narrative.

First Character: (Note 1)

P - Pass
F - Fail (Hard Fail Only - Asset Is Physically Failed)
N - Not A Complete Test

Second Character: (Where Is The Problem) (Note 2)

N - No Problem Noted (Most Passes)
U - Unit Under Test Or Inspection Problem
T - Test Equipment Problem
P - Personnel/Procedural Problem
D - Documentation Problem
C - Calibration/Certification Problem

Third Character: (Status Of Asset) (Note 3)

U - Unconditional (Most Cases - Including MDD Expired Or Short)
W - Waiver/Deviation
T - Td Conditional

The first character of this three character results code indicates the actual result of the test or inspection performed. The ultimate question is whether the material is: (good Code P), (bad Code F) or (unknown Code N).

Notes:

1. The first character of Code F indicates that the material requires repair or further isolation. The Code F is not applicable if the item requires periodic recertification (i.e. MDD), modification, or other scheduled maintenance actions. The Code P represents a successful result for that operation without regard to whatever subsequent actions will occur.
2. The second character of this code indicates the specific problem encountered. The problem is most likely to be found in the item under test or inspection (Code U) or no problem at all (Code N). On occasion there will be a problem with the test or inspection equipment (Code T) personnel or procedural problems (Code P), or a documentation problem (Code D).

   Example: A missile requiring maintenance, due to expiration of the MDD, or the incorporation of a technical directive is generally not to be classified as a problem. For this case the (Code N) is used to indicate (no problem noted) with the incoming visual or test operation. Don't consider the expired MDD or technical directive incorporation needed as a problem since the asset is not physically inoperable due to them. There are exceptions where a critical technical directive may be needed for a missile or component. In these cases, the asset should be considered (physically failed). A possible result code for this situation could be (Code FUT). For non-critical technical directive incorporations, the result code generally is (Code PNT). For MDD, The general result code is (Code PNU).
3. The third character of this code identifies any conditions that are present which in some manner qualify the problem being addressed. Examples of this would be if an item passes only because of a waiver or deviation. Also if a particular technical directive, deficiency report, or Notice of Ammunition Reclassification (NAR) mandates that the item be treated as a failure or a problem.

Figure C-7. Test/Inspection Result Codes

Test/Inspection Codes For Missile Support Equipment

Test Results	Code
Accepted Without Test-(Explain In Narrative)	0
Go Test	1
No Go Test-(Item)-test Failure Due To Malfunction Of Equipment Under Test	2
No Go Test-(Personnel)-test Failure Due To Faulty Set Up, Procedure Error Or Misinterpretation By Operating Personnel	3
No Go Test-(Test Set)-test Failure Due Malfunction Of Test Set	4
Adjustment For Retest	5
Special Handling-(Explain In Narrative)	6
No Go Test-(Other)-source Of Failure Other Than As Listed (Explain In Narrative)	7
Go Test-(Other)-equipment Passed Test Because Of Waiver Or Deviation (Explain In Narrative)	8
Result Unknown-test Terminated	9
Inspection Codes Accepted Unconditionally	A
Accepted In A Waiver (Explain In Narrative)	B
Accepted On A Deviation (Explain In Narrative)	C
Accepted In A Waiver / Deviation (Explain In Narrative)	D
Accepted For Restricted Use (Explain In Narrative)	E
Rejected For Defect	F
Rejected For Incorrect Configuration	G
Rejected For Technical Instruction (Explain In Narrative)	H
Rejected-other (Explain In Narrative)	J
Rejected-not Certified	K
Rejected-out Of Calibration / Alignment	L
Rejected-Calibration Required	M

Figure C-7. Test/Inspection Result Codes - contd.

Missile Disposition Codes

Action	Code
Held Awaiting Next Action (Includes NON-RFI Storage)	HNA
Returned To Station Inventory (Ordnance Assessment Activity Only)	RST
Sent to Designated Overhaul Point	DOP
Sent to Calibration (Test Equipment)	CAL
Sent to Ordnance Assessment Activity	QEL
Sent to Long-Term Storage Depot	LTS
Sent to Storage (Condition Code Dictates RFI or NON-RFI)	STO
Sent to Naval Weapons Station, NMC Detachment or Other Shore Activity	NWS
Sent to Stock Issue Point	STS
Transferred for Special Use	TEX

Figure C-8. Disposition Codes

Missile Support Equipment Disposition Codes

Action	Code
Accepted For Use	AAC
Sent to Calibration Laboratory	CAL
Sent to DOP (Designated Overhaul Point)	DOP
Held Awaiting Disposition Instructions	HAD
Held Awaiting Shipment	HAS
Held Awaiting Waiver to Make Item RFI	HAW
Held Awaiting Service Representative	HAR
Held for On-Base Repair	HBR
Held for Buildup	HED
Held for Explosive Ordnance Disposal	HFR
Held for Retest	HFT
Held for Modification	HMO
Sent to Long Term Storage Depot	LTS
Sent to Naval Weapons Station, NMC Detachment or Other Shore Activity	NWS
Sent to WQEC	SED
Returned to Station Inventory (WQEC Use Only)	RST
Sent to RFI Storage	STO
Surveyed to SA	STS
Surveyed and Withdrawn from Stock	SVY
Transfer of Item for Special Use (Implies Removal from Stock)	TEX

Figure C-8. Disposition Codes - contd

Missile Failure Category Codes

First Character (Method of detection) (Note 1)

V - Visual Inspection Performed
T - Test Performed

Second Character (Component/Section affected) (Note 2)

A - All-Up-Round
G - Guidance Section or Guidance Control Section (GCS)
P - Propulsion Section or Rocket Motor or Booster Rocket Motor
W - Warhead Section or Armament Section
T - Target Detecting Device
F - Airframe (including wings, fins, cables, canards, etc.)
X - Exercise Section or Telemetry Section
C - Control Section or Flight Control Group
S - Sustainer Section
K - Container
Y - Canister
Z - Capsule
I - Igniter or Safe & Arm Device (When separated from warhead)
O - Other (Pyrotechnics, etc.)

Third Character (Type of failure/problem) (Note 3)

C - Excessive Corrosion
E - Electrical
H - Hydraulic/Mechanical
D - Documentation (including logs, labels, tags)
K - Cosmetic or Minor Damage
P - Physical Damage (Major)
M - Maintenance Due Date
R - Alterations/Modifications Required (e.g., AWB, AWC, or other)

Describe exception problems in Narrative.

For Example: V.W. P.*

	Comments:
Visual Inspection	(revealed that)
Ordnance Section	(has following problem:)
Physical Damage	

Narrative: Warhead was dropped (which is exception from routine maintenance)

*This was formerly identified as WDR - Warhead (W) was dropped.

Figure C-9. Failure Category Codes

Missile Failure Category Codes

This Failure Category Code (FCC) is used to indicate possible problems with the item. Failure category codes may be used on any data record. The result code need not be a failure. There is no requirement to report an FCC for a particular item more than once.

Notes:

1. The first character of this three character failure category code indicates the method in which the discrepancy was found. The ultimate question is whether the problem was discovered through a visual observation of the material (Code V) or an electrical of mechanical test performed against the material (Code T).

   The code of "T" indicates that some test was performed which identified the problem. If the problem was discovered before the test and subsequently confirmed by the test, two separate failure category codes should be used.

2. The second character of this code indicates where the specific problem is located. The letter corresponding to the item that has the failures is identified by the second character. If the problem occurs at a level (such as an igniter or battery) use the code letter corresponding to the next higher assembly for that item.

3. The third character of this code identifies the nature of the problem found. Electrical problems (Code E) are most often identified after an electrical test utilizing specific test equipment. Cosmetic problems (Code K) include any problems that are external to the missile or section which generally can be repaired on site. Physical damage (Code P) are major external missile or section problems which generally must be repaired on site.

Figure C-9. Failure Category Codes - contd.

Missile Support Equipment Failure Symptom codes

Code	Description
AFR	Abnormal Function of Computer Tape Reader
ADT	Abnormal Function of Data Terminal
ADC	Abnormal Function of Disc Unit/Power Supply
AKT	Abnormal Function of Keyboard Display Terminal
ALP	Abnormal Function of Line Printer
AMT	Abnormal Function of Magnetic Tape Equipment
ALP	Abnormal Function of Tape Punch
AFT	Abnormal Function of Transport+
AFC	Abnormal Function Test System Computer
AOA	Accidental or Inadvertent Operation Release or Activation
AAI	Adjustment or Alignment Improper
AIS	Air in System
AAZ	Arcing, Arced
AVF	Audio and Video Faulty
AAT	Automatic Align Time Excessive
BBC	Bent, Buckled, Collapsed, Dated, Distorted or Twisted
BSJ	Binding, Stuck, or Jammed
BPD	B Plus Damage
BPN	B Plus Missing
BRO	Broken
BFM	Broken, Faulty, or Faulty/Missing Wire
BFB	Broken or Frayed Bonding/Ground Wire
BFW	Brush Failure/Worn Excessively
BOB	Burned Out or Defective Light Bulb or Led
BOO	Burned or Overheated
BOR	Burst or Ruptured
CRC	Cannot Resonate Input Cavity
COV	Change of Value
CTG	Chattering
CPD	Chipped
COI	Conductance Incorrect
CCD	Contracts/Connection Defective
CMN	Contamination
CLK	Coolant
CLL	Coolant Level
CLF	Coolant Flow
CRR	Corroded
CRD	Cracked
CTS	Cracked Vacuum Tube Socket
CCC	Cracked Card Connector
CIS	Current Incorrect
CUT	Cut

Figure C-9. Failure Category Codes - contd.

Missile Support Equipment Failure Symptom codes

Code	Description
DIP	Damaged Input Probe
DLH	Data Line High Error Rate
DMP	Defective Motor or Pump
DRG	Defective Regulator
DVE	Defective Valve
DAC	Defective or Malfunctioning Anechoic Chamber
DMS	Defective or Malfunctioning Missile Support Stand
DLD	Delaminated
DTD	Deteriorated
DIR	Dirty
DAF	Dirty Air Filter
DOF	Dirty Oil Filter
DRK	Dirty Relay Contacts
DEC	Does not Engage, Lock, or Unlock Correctly
DNT	Does not Simulate Tracking Correctly
EHO	Excessive Hum
EPS	External Primary Power Source not Correct
EFS	External 400hz Power Source not Correct
FDI	Failed, Damaged or Replaced Due to Malfunction of Associated Equipment or Item
FOU	Failed to Operate Function - Specific Reason Unknown
FDT	Failed Diagnostic, Automatic Test
PFU	Failure of Air Source
FOS	Failure of Oil Source
FCC	Faulty Circuit Card
FCR	Faulty Commercial Counter
FCD	Faulty Commercial Digital Voltmeter
FCG	Faulty Commercial Equipment
FPM	Faulty Commercial Power Supply
FCP	Faulty Component
FTC	Faulty Tape
FUE	Fluctuates, Unstable or Erratic
FOD	Foreign Object Damage
FEI	Frequency Erratic or Incorrect
FIS	Frequency Instability
FBP	Fuze Blown or Defective Circuit Protector
HYE	High
HVS	High Voltage Standing Wave Ratio
IIR	Impedance Incorrect
IOA	Impending or Incipient Failure Indicate by Oil Analysis
IFM	Improper or Faulty Maintenance
IPS	Improperly Positioned or Selected
ING	Incorrect Gain

Figure C-9. Failure Category Codes - contd.

Missile Support Equipment Failure Symptom codes

Code	Description
INM	Incorrect Modulation
INV	Incorrect Voltage
IPD	Input Pulse Distortion
ISB	Insulation Breakdown
ITT	Intermittent
IFT	Internal Failure
LIL	Lack of Proper lubrication
LEK	Leak
LOE	Loose
LOO	Loose or Damaged Bolts, Nuts, Rivets, Fasteners, Clamps, or Other Common Hardware
LOW	Low
MSY	Malfunctioning Servo Assembly
MTY	Malfunctioning Transducer Assembly
MBN	Missing Bolts, Rivets, Fasteners, Clamps, or Other Common Hardware
MPA	Missing Parts
NIC	Nicked
NOD	No Defect
NDC	No Defect - Component Removed and/or Reinstalled to Facilitate other Maintenance
NDI	No Defect - Component Removed for Calibration Interval
NDM	No Defect - Removed for Scheduled Maintenance
NDS	No Defect - Removed as Part of Matched System
NRC	No Defect - Removed for Time Change
NRM	No Defect - Removed for modification
NWA	No Defect - Within Limits
NWC	No Defect - Within Calibration/Alignment
NDY	No Display
NFF	No Fuze Fire
NGU	No-Go Indication - Specific Reason Unknown
NOI	Noisy
NOP	No Output
OPN	Open
OSC	Oscillating
OTB	Out of Balance
OXF	Out of Band Frequency
OPD	Output Pulse Distortion
PIT	Pitted
POP	Poor or Incorrect Focus
POS	Poor Spectrum
PSI	Pressure Incorrect
RIC	Resistance Incorrect
SPF	Scope Presentation Incorrect or Faulty
SOS	Scored or Scratched

Figure C-9. Failure Category Codes - contd.

Missile Support Equipment Failure Symptom codes

Code	Description
SHT	Shorted
SRF	Slip Ring or Commutator Failure
STD	Stripped
SMA	Sweep Malfunction
SAB	Sync Absent or Incorrect
TEM	Temperature Incorrect
TEN	Tension Incorrect
TOR	Torn
TOI	Torque Incorrect
TRD	Transportation Damage
TEI	Travel or Extension Incorrect
UAL	Unable to Adjust to Limits
WCF	Worn, Chaffed or Frayed
WFH	Worn or Faulty Harness
WLC	Wrong Logic Program

Figure C-9. Failure Category Codes - contd.

Status Codes (Test Equipment)

Status	Code
OPERATIONAL	OPR
REDUCED CAPABILITY REQUIRES CALIBRATION	CAL
REDUCED CAPABILITY REQUIRES CERTIFICATION	CRT
REDUCED CAPABILITY REQUIRES CALIBRATION OF A COMPONENT	COC
REDUCED CAPABILITY REQUIRES MAINTENANCE	MNT
INOPERATIVE	DWN

NOTE

For Source and Ammunition Condition Codes refer to NAVSUP P-805

Figure C-10. Status Codes (Test Equipment)

NAME	CODE
Afghanistan	AF
Algeria	AG
Andorra	AN
Antigua and Barbuda	AC
Argentina	AR
Australia	AT
Austria	AU
Bahamas	BF
Bahrain	BA
Bangladesh	BG
Barbados	BB
Belgium	BE
Belize	BH
Benin (formerly Dahomey)	DA
Bhutan	BT
Bolivia	BL
Botswana	BC
Brazil	BR
Brunei	BX
Burkina Faso (formerly Upper Volta)	UV
Burma	BM
Burundi	BY
Cambodia	CB
Cameroon	CM
Canada	CN
Central African Republic	CT
Chad	CD
Chile	CI
China (People's Republic of)	CH
Columbia	CO
Congo (Brazzaville)	CF
Costa Rica	CS
Cuba	CU
Cyprus	CY
Czechoslovakia	CZ
Dahomey (see Benin) Guinea	
Denmark	DE
Djibuti	DJ
Dominica	DO
Dominican Republic	DR
Bolivia (International Narcotics Control)	D1
Peru (International Narcotics Control)	D3
MAP ICP-USALDJ	D4
Columbia (International Narcotics Control)	D5

NAME	CODE
Ecuador	EC
Egypt	EG
Ireland	EI
Equatorial Guinea	EK
Estonian	EN
El Salvador	ES
Ethiopia	ET
Falkland Islands	FA
Fiji	FJ
Finland	FI
France	FR
Gambia	GA
Gabon	GB
Ghana	GH
Grenada	GJ
Germany	GM
Greece	GR
Guatemala	GT
Guyana	GU
Guinea	GV
Guinea-Bissau	PU
Germany (Bonn)	GY
Haiti	HA
Honduras	HO
Hungary	HU
Indo-China	IC
Indonesia	ID
Iceland	IL
India	IN
Iraq	IQ
Iran	IR
Israel	IS
Italy	IT
Ivory Coast	IV
Japan	JA
Jamaican	JM
Jordan	JO
Kenya	KE

Figure C-11. Country/Ownership Codes

NAME	CODE
Ecuador (FMS cases financed w/FY 90 credit)	D6
Latin American Anti-Narcotics Assistance	D9
NATO-WPP	K1
NAMSA-F104	K2
NATO MRCA	K3
NICSMA	K4
SACLANT	K5
NAMSA-NNTC	K6
NATO AEW&C (O&S)	K7
Laos	LA
Lebanon	LE
Latvia	LG
Lithuania	LH
Liberia	LI
Liechtenstein	LS
Lesotho	LT
Luxembourg	LX
Libya	LY
Madagascar (formerly Malagasy Republic)	MA
Malagasy Republic (see Madagascar)	
Malaysia	MF
Malawia	MI
Monaco	MN
Morocco	MO
Mauritius	MP
Mauritania	MR
Malta	MT
Oman	MU
Maidive Island	MV
Mexico	MX
Mozambique	MZ
Myanmar (formerly Burma)	BM
MAPSAD	M2
MAPON	M3
NAMSA Weapons	M5
NPLO	M6
NATO (Southern Region Signal/ Communications NAMSA-COMMO)	M7
Mali	RM
Netherlands	NE
Nigeria	NI
Niger	NK
Norway	NO
Nepal	NP

NAME	CODE
Korea (Seoul)	KS
Kuwait	KU
NATO	N2
NATO SEASPARROW	N3
NAMSA-General	N4
NATO Infrastructure	N5
NATO Headquarters	N6
NAMSA	N7
NATO MWDP	N8
NAMFI	N9
Paraguay	PA
Peru	PE
Philippines	PI
Pakistan	PK
Poland	PL
Panama	PN
Papua-New Guinea	PP
Portugal	PT
Qatar	QA
Russia	RS
Rwanda	RW
Europe Region	R2
NESA	R3
EAP	R4
American Republic Region	R5
African Region	R6
Saint Christopher Nevis	SC
Seychelles	SE
Saudi Arabian National Guard	SI
Senegal	SK
Sierra Leone	SL
San Marino	SM
Singapore	SN
Somalia	SO
Spain	SP
Saudi Arabia	SR
Saint Lucia	ST
Sudan	SU
Sweden	SW
Syria	SY
Switzerland	SZ

Figure C-11. Country/Ownership Codes - contd.

NAME	CODE
Sunname	NS
Nicaragua	NU
New Zealand	NZ
NAPMO	N1
Tonga	TN
Togo	TO
Sao Tome and Principe	TP
Tunisia	TU
Tanzania	TZ
CENTO HQ	T3
SEATO HQ	T4
ICAO HQ	T7
United Nations	T9
South Africa	UA
Uganda	UG
United Kingdom	UK
Ukraine	UP
Uraguay	UY
United States Army	01
United States Navy	05

NAME	CODE
United Arab Emirates	TC
Trinidad-Tobago	TD
Thailand	TH
Turkey	TK
Saint Vincent and Grenadines	VC
Venezuela	VE
Western Samoa	WS
Swaizland	WZ
Yemen (Sanaa)	YE
Yemen	YM
Yemen (Aden)	TS
Yugoslavia	YU
Zambia	ZA
DOD GC-MAP	00
Expanded IMET	66
United States Marine Corps	04
United States Air Force	06

Figure C-11. Country/Ownership Codes - contd.

APPENDIX D

Serviceable In-Service Time/Service Life Designations for Weapons

APPENDIX D

Serviceable In-Service Time/Service Life Designations for Weapons

Table of Contents

Paragraph	Subject	Page
D1	Introduction	D-1
D2	Definitions	D-1
D3	JDAM Life - Life Expectancy Out-of-Container	D-2
D4	AIM-9X SIDEWINDER Service Life-Life Expectancy Out-of-Container	D-2
D5	ALM Cat/Traps Flight Limitations	D-2
D6	JSOW Shelf Life and Service Life	D-3
D7	Procedures for Implementing SIST or Service Life Changes	D-3
D8	Procedure for Requesting MDD Extensions	D-3
D9	MDD Extensions for Air Launch Missiles (ALMs) on Maritime Prepositioning Ships (MPS)	D-4
D10	Service Life Designations	D-4
D11	Service Life Validation	D-4

List of Illustrations

Figure	Title	Page
All-Up-Rounds		D-5
SPARROW AIM/RIM-7		D-12
SIDEWINDER AIM-9		D-13
AMRAAM AIM-120		D-14
HARPOON A/R/UGM-84		D-15

List of Illustrations - contd.

Figure	Title	Page
	SLAM-ER AGM-84H-1 / ATM-84H-1 / CATM-84H-1A	D-18
	HARM AGM-88B/C	D-19
	AARGM AGM-88E	D-20
	MAVERICK AGM-65	D-21
	2.75 Inch WAFAR	D-21
	5 Inch ZUNI WAFAR	D-22
	JATO/RATO	D-23
	APKWS II	D-24
	Pyrotechnics	D-24
	Airborne Countermeasures Pyrotechnics	D-25
	Underwater Sound Signals	D-26
	Gun Ammunition	D-27
	Smokey Sam	D-28
	Bombs and Components	D-29
	Cluster Bomb Units (Rockeye) Configuration	D-32
	CBU-78 Gator Configurations	D-33

APPENDIX D

Serviceable In-Service Time/Service Life Designations for Weapons

D1 Introduction.

a. This appendix tabulates the current Serviceable In-Service Time (SIST) and service life of airborne weapons. Since the reliability of components is continually being monitored through ordnance assessment testing programs, component service lives and SISTs designated herein may change periodically. Official change pages to this appendix will be distributed as changes occur.

D2 Definitions.

a. Installed Life. The period of time an item is allowed to be used after its hermetically sealed container is opened, however, the installed life expiration date shall never exceed the shelf life expiration date. The installed life expiration date is computed from the date the hermetically sealed container is opened, and is always computed to the day of the month involved.

b. Service Life. The period of time during which an item can be used with an ensured high degree of reliability. Performance of the item is influenced by the environment to which it is exposed. These time limits are defined as shelf life and installed life. Shelf life and installed life are not combined.

c. Shelf Life. The period of time beginning from the date of manufacture that an item can remain in its hermetically sealed container and still be serviceable. The shelf life expiration date shall always be computed from the date of manufacture available from the lot number for the assembled item.

d. Serviceable In-Service Time. SIST is defined as the period of time an air launched missile may remain in operational use or storage before its internal electronic or mechanical components require a test or maintenance action at a Naval Weapons Support Facility, Navy Munitions Command (NMC) Detachment or Naval Airborne Weapons Maintenance Unit to validate suitability for operational use. The SIST clock starts with the latest date the missile was tested by a Naval Weapons Support Facility, NMC Detachment, Depot Repair Facility or Naval Airborne Weapons Maintenance Unit.

e. Reliability Centered Maintenance (RCM). RCM is a disciplined methodology to collect empirical data through stratified sampling of total inventory to predict maximum maintenance periodicity to optimize the inherent reliability of weapons energetics and electronics. All-Up-Rounds (AUR) and subcomponents without a specified SIST shall be considered RCM pending determination of recertification through Ordnance Assessment Program (OAP) surveillance.

f. Maintenance Due Date (MDD). MDD is defined as the date an air launched missile or component must be returned to a Naval Weapons Support Facility, NMC Detachment or Naval Airborne Weapons Maintenance Unit for testing. The MDD is established by adding SIST to the latest test date, but may not exceed the date that an internal component's service life will expire.

NOTE

Most reporting systems allow for only a month/year field for the MDD. The MDD will expire on the last day of the month, after the Date of Last Test (DOLT) plus SIST is calculated.

g. All maintenance activities involved in the repair or maintenance of age-sensitive U.S. Navy air launched missiles or missile component sections, shall, upon restoration of such assets to serviceable condition code A, ascertain the next inspection due or over age dates as specified herein, and complete the appropriate block of the DD 1574 Serviceability Tags accordingly.

h. Upon receipt of new production assets for which maintenance due dates cannot be determined from serviceability tag information, Naval Weapons Support Facility, NMC Detachments and Naval Airborne Weapons Maintenance Units are authorized to calculate these dates by adding the applicable SISTs, as designated herein, to the date of acceptance of the assets by authorized government agents as indicated in block 21A of the material inspection and receiving report (DD 250) which accompanies all such assets.

D3 JDAM Life - Life Expectancy Out-of-Container. JDAM and Laser JDAM Warranty Life information is located on page D-30. The JDAM Guidance Set and Laser JDAM Sensor has a Warranty Life expectancy in the Container of 20 years from Date of Manufacture (DOM); a Warranty Life expectancy Out-Of Container of 5 years. JDAM/Laser JDAM Shelf/Service life is indefinite.

D4 AIM-9X SIDEWINDER Service Life-Life Expectancy Out-of-Container. The AIM-9X missile has a 10 year shelf life in the container. Tactical missile should be managed by rotating assets between in-service, ready storage, and deep storage so the provisions of the warranty can be maximized. CATM-9X SIDEWINDER Service Life-Life Expectancy Out-of-Container. The CATM-9X missile has a 10 (ten) year shelf life in the container. CATM-9X missile should be managed by rotating assets between in-service, ready storage, and deep storage so the provisions of the warranty can be maximized. CATM-9X shall be returned to Depot at 5000 hour intervals for inspection and replacement of critical hardware components for all A/C platform utilization. For F/A-18 series aircraft; Tactical missile reaching 2600 hour intervals will be returned to Depot for inspection and replacement of warhead. AIM-9X will also be required to be returned to Depot at 5000 hour intervals for inspection and replacement of critical hardware components for all A/C platform utilization.

D5 ALM Cats/Traps Flight Limitations.

a. JSOW has a Cats/Traps Limitation as listed:

(1) AGM-154A all Navy Ammunition Logistics Code (NALCs) 50 Cats/Traps.

(2) AGM-154C all NALCs 50 Cats/Traps.

(3) AGM-154C-1 all NALCs 50 Cats/Traps.

All JSOW Weapons will be placed in Condition Code “C” when 40 Cats/Traps have been logged. At 50 Cats/Traps place weapon in Condition Code “F”.

b. JSOW Flight Hour Limitations as listed:

(1) AGM-154A all NALCs 300 Hours.

(2) AGM-154C all NALCs 300 Hours.

(3) AGM-154C-1 all NALCs 300 Hours.

At 300 hours place weapon in Condition Code "F".

D6 JSOW Shelf Life and Service Life. JSOW SIST information is located on page D-11. The AGM-154A, AGM-154C, and AGM-154C-1 have a Shelf/Service Life of 20 years from Date of Manufacture (DOM).

D7 Procedures for Implementing SIST or Service Life Changes.

NOTE

The holding activity shall be solely responsible for accomplishing the SIST extension and reporting back to the Naval Supply Systems Command Global Logistics Support (NAVSUP GLS AMMO). Naval Air Warfare Center Weapons Division (NAVAIRWARCENWPNDIV) detachments shall be responsible for monitoring compliance of activities under their purview.

a. Upon receipt of a change to the published SIST or service life, a new MDD must be implemented for each serial numbered AUR. To accomplish this in the most efficient and expeditious manner for all concerned, the method described below will be followed.

b. All-Up-Round missiles that have already been downgraded to an unserviceable status for an expired MDD typically are not upgraded to a serviceable status even if the SIST change would have generated a MDD enabling the missile to be serviceable. In many instances, serviceable missiles will not have their existing MDDs extended. To preclude these events from occurring, the NAVAIRWARCENWPNDIV detachments will continually monitor missile assets at the Weapons Stations, NMC Detachments or activities under their purview. The detachment personnel will ensure that those missiles requiring a change to their MDD, have all necessary steps taken to tags, bar codes, documentation, stenciling, and reporting of status change to reflect the new MDD.

c. Weapons Stations, NMC Detachments or Naval Airborne Weapons Maintenance Units shall compute MDDs based on the new SIST or service life for all missiles tested and certified after receipt of an official change to this appendix.

D8 Procedure for Requesting MDD Extensions.

a. Fleet missile users have occasion to request an MDD extension when operational considerations will not allow return of missiles to a Naval Weapons Support facility, NMC Detachments or Naval Airborne Weapons Maintenance Unit for maintenance. Although Operational Commanders, Type Commanders, or a Fleet Commanders may elect to retain missiles onloaded beyond the MDD to meet operational requirements, the Commander does this with a risk of operating missiles with reduced reliability.

b. The following guidelines for MDD extensions for 8E cognizance air launched missiles (including RIM-7 SEASPARROW, RGM-84 surface, and UGM-84 submarine launched HARPOON) must be used to preclude misrouting.

c. When operational situations dictate, Fleet users must request an MDD extension from the appropriate Operational Commander or Type Commander with information copies of the request sent to Commander, Naval Air Systems Command (COMNAVAIRSYSCOM), NAVAIRWARCENWPNDIV. The request must include the following information:

(1) The custodian or accountable activity of missiles for which the extension is requested.

(2) Missile information:

Type Model Series	Number	Current MDD (Month/Year)	Requested MDD (Month/Year)
XXX XX XX	XXXX	XXXX	XXXX

(3) Reason for requested extension. For example:

(a) To be fired during exercise scheduled for (date).

(b) Required for completion of deployment to be completed (date).

d. The appropriate Operational Commander will review the request and is authorized to grant an extension for up to 90 days from the original MDD. To minimize safety and reliability risks, extensions will not exceed 90 days. For extensions required to go beyond 90 days, the operational or Type Commander must forward the request directly to COMNAVAIRSYSCOM. COMNAVAIRSYSCOM will respond to the requesting activity and will either approve or disapprove the MDD extension. The responding message will identify each serial number in the original request and include the approval date the missile is extended to or appropriate rationale for disapproval of the MDD extension request. The same message addressee on the original MDD request will be included as an information addressee on all responses regarding MDD extension approvals, disapprovals, or other information required to resolve the MDD extension request.

D9 MDD Extensions for Air Launch Missiles (ALMs) on Maritime Prepositioning Ships (MPS).

a. Considering the SIST intervals for those ALMs and the benign storage environment aboard MPS ships, no appreciable degradation of missile performance is anticipated if established MDDs are extended to the length of the current MPS cycle. Personnel involved in loading ALMs aboard MPS ships may extend MDDs to the end of the next planned MPS maintenance cycle, provided that the present remaining SIST prior to expiration of the MDD is not less than 50 percent of the present MPS cycle. For example, if a MPS maintenance cycle is 30 months, 50 percent of 30 months is 15 months. Therefore, if an ALM has 15 months or more remaining of its SIST, it is eligible to be a MPS candidate.

b. Ensure that an appropriate Ammunition Transaction Report (ATR) is submitted to reflect the new MDD in the OIS database, after MDD have been extended. Liaison must be established with the inventory manager and the issuing activity to ensure that weapons earmarked for MPS will meet 80% criteria.

D10 Service Life Designations.

a. Service life designations for cartridge actuated devices may be found in NAVAIR 11-100-1.1 CD.

b. Service life designations for propulsion actuated devices may be found in NAVAIR 11-100-1.1 CD. Service life data by propulsion actuated devices lot number may be obtained by contacting Naval Surface Warfare Center Division, Indian Head.

D11 Service Life Validation. Program managers shall review respective Department of Defense Identification Code (DODIC)/NALC service life limitations listed in this Appendix annually.

ALL-UP-ROUNDS

TYPE/MODEL/ SERIES	NOMENCLATURE	DODIC/NALC or PART NO.	SIST
	SPARROW		
AIM-7M (F1)	GM	PB66, WF63	60 mos
AIM-7M (H)	GM	PV70, WF60	60 mos
ATM-7M (F1)	GM Trng	PD07, WF67	60 mos
ATM-7M (H)	GM Trng	PV13, WF59	60 mos
RIM-7M (F1)	GM	PB67	42 mos
RIM-7M (H)	GM	PV72	42 mos
RIM-7M	GM (VL)	PV71	42 mos
RTM-7M (F1)	GM Trng	PD15	42 mos
RTM-7M (H)	GM Trng	PV14	42 mos
AIM-7P	GM (Blk I)	PV21, WF61	60 mos
AIM-7P	GM (Blk II)	PV22, WF64	60 mos
AIM-7P	GM Trng (Blk I)	PU57, WF65	60 mos
AIM-7P	GM Trng (Blk II)	PU59, WF66	60 mos
AIM-7P	GM (Blk II-FFT)	WF50, WF62	60 mos
RIM-7P	GM (Blk I)	PE42	42 mos
RIM-7P	GM (Blk II)	PE43, WF69, WH07	42 mos
RIM-7P	GM (Blk II-VL)	PU04, WF71, WH09	42 mos
RIM-7P	GM (Blk II-FFT)	WF70, PU96, WH08	42 mos
RIM-7P	GM (Blk II-VL-FFT)	PU95, WF72, WH10	42 mos
RTM-7P	GM Trng (Blk I)	PU58	42 mos
RTM-7P	GM Trng (Blk II)	PU60, WF73, WH11	42 mos
RTM-7P	GM Trng (Blk II-FFT)	PU78, WF75, WH27	42 mos
RTM-7P	GM Trng (Blk II-VL)	PU61, WF74, WH19	42 mos
RTM-7P	GM Trng (Blk II-VL-FFT)	PU79, WF76, WH35	42 mos
RTM-7M (H)	GM Trng (VL)	PU62, PU63	42 mos
CRTM-7F	GM Simulator	5W31	NONE
CATM-7F-3	GM Simulator	7W68, CWMC	NONE

ALL-UP-ROUNDS - contd.

TYPE/MODEL/ SERIES	NOMENCLATURE	DODIC/NALC or PART NO.	SIST
		SIDEWINDER, AIM-9M only	
AIM-9M-1	GM	PB55, PV66	62 mos
AIM-9M-4	GM	PV74	62 mos
AIM-9M-6	GM	PV76	62 mos
AIM-9M-8	GM	PU75, PV89	62 mos
AIM-9M-10	GM	WF57	62 mos
NATM-9M-1	GM Trng	PC64, PV42	62 mos
NATM-9M-14	GM Trng	WF54	62 mos
NATM-9M-15	GM Trng	WF56	62 mos
CATM-9M-2/4/6/8/12/14	GM Trng	PC61, PV44, BWBT, BWBS, PU70, PU71	NONE
CATM-9M-16/17/18/19/20	GM Trng	PFE6, PFF0, PFE9, PFE8, BWFX	NONE
CATM-9M-21/22/23/24/25	GM Trng	BWFY, BWFZ, PFE7, BWGA, BWGB	NONE
CATM-9M-26/27	GM Trng	BWGC, WF55	NONE
CATM-32/33/34	GM Trng	BWLH, BWLJ, BWLK	NONE
		SIDEWINDER, AIM-9X only	
AIM-9X	GM	WF77	2600/5000 Hr Intervals
NATM-9X	GM Trng	WF78, WF79	2600/5000 Hr Intervals
CATM-9X	GM Trng	CWMB	5000 Hr Intervals
CATM-9X-2	GM Trng	QL32	5000 Hr Intervals
DATM-9X	GM Dummy	CWKM	NONE

NOTE: AIM-9X/NATM-9X/CATM-9X Lots 1 - 7 have a 120 month or a 2000 captive carriage hour warranty; missile is still good after the warranty has expired. AIM-9X will have warheads replaced at 2600 hour intervals and will be returned to Depot for maintenance at 5000 hour increments. CATM-9X will be returned to Depot for maintenance at 5000 hour intervals.

ALL-UP-ROUNDS - contd.

TYPE/MODEL/ SERIES	NOMENCLATURE	DODIC/NALC or PART NO.	SIST
	HARPOON		
AGM-84D-1	GM Tact	PD84, PE02, PE39	RCM
ATM-84D-1	GM Exer Air	PE41, PE62, PD50, PFCO, PFC1	RCM
CATM-84D-1	CATM	BWCF	NONE
CATM-84D-2 (Enhanced)	CATM	BWEW	NONE
RGM-84D-2	GM Tartar	PE13, PE14, PE15	RCM
RGM-84D-4	GM Can SH RES	PE24, PE25, PE26	RCM
RGM-84D-5	GM Can TH Wall	PE29, PE30, PE31	RCM
RTM-84D-2	GM Exer Tartar	PE72, PE73, PE74, PFC2, PFC3	NONE
RTM-84A-2B	GM Trng Tartar (CTV)	JW94	NONE
RTM-84A-2C	GM Trng Tartar (BTV)	JW98	NONE
RTM-84D-4	GM Exer Can SH RES	PE79, PE85, PE86, PFD1, PFD2	NONE
RTM-84A-4B	GM Trng Can SH RES (CTV)	UW99	NONE
RTM-84A-4C	GM Trng Can SH RES (BTV)	JW90	NONE
RTM-84D-5	GM Exer Can TH Wall	PE88, PE89, PE90, PFD3, PFD4	NONE
RTM-84A-5B	GM Trng Can Th Wall (CTV)	BWBR	NONE
UGM-84D-1	GM Encap	PE33, PE34, PE35	60 mos
UTM-84D-1	GM Exer Encap	PE92, PE93, PE94, PFC6, PFC7	60 mos
UTM-84A-1D	EHCTV	72A356525-1011	RCM
BGM-84D-1	GM Tact Cap/Can	4W56, 4W57, 4W58	RCM
BTM-84D-1	GM Exer Cap/Can	4W52, 4W53, 4W54, BWFJ, BWFK	RCM
BTM-84A-1B	CTV	79-5043-2109	RCM
GM-84D-1	HMB Tact	3W99, 4W13, BWDY	RCM
GM-84D-1A	HMB Tact	3W99, 4W13, BWDY	RCM
TM-84D-1	HMB Exer	3W98, 4W16, BWDZ	NONE
TM-84D-1B	HMB Exer	3W98, 4W16, BWFN, BWFO, BWDZ	NONE

NOTE: UGM-84D-1 and UTM-84D-1 missiles shall require full recertification prior to Fleet issue when removed from deep stowage.

ALL-UP-ROUNDS - contd.

TYPE/MODEL/ SERIES	NOMENCLATURE	DODIC/NALC or PART NO.	SIST
	STANDOFF LAND ATTACK MISSILE EXPANDED RESPONSE (SLAM-ER)		
AGM-84H-1	GM Tact	WF30	84 mos
AGM-84K-1	GM Tact	WF44	84 mos
AGM-84H-1	GM Tact (Defueled)	WH75	84 mos
AGM-84K-1	GM Tact (Defueled)	WH76	84 mos
AGM-84K-1	GM Exer (Defueled)	WH77	84 mos
ATM-84K-1	GM Exer	WF46	84 mos
CATM-84K-1A	CATM	WF45	NONE
	HARM		
AGM-88B	Tact (Blk IIIA)	WF20, WF21	36 mos
AGM-88C	Tact (Blk V)	WF22, WH55	72 mos
ATM-88B	Training (Blk IIIA)	WF19	36 mos
CATM-88B	Training (Blk IIIA)	WF23, WF24	NONE
CATM-88C	Training (Blk V)	WF18	NONE
DATM-88A	Dummy	LW07	NONE
	AARGM		
AGM-88E	Tact	TBD	60 mos
CATM-88	Training	TBD	NONE
DATM-88E	Dummy	TBD	NONE

ALL-UP-ROUNDS - contd.

TYPE/MODEL/ SERIES	NOMENCLATURE	DODIC/NALC or PART NO.	SIST
	MAVERICK		
AGM-65E	Guided Missile Surface Attack Laser	PB69	RCM
AGM-65F	Guided Missile Surface Attack Imaging Infrared	PD63	RCM
LDT	Load Drill Training Missile	2W90	NONE
TGM-65E	Training Guided Missile Laser	3W70	NONE
CATM-65F	Captive Air Training Missile IR	PY15	NONE
LTGM-65E	Light Weight Training Missile Laser	CWLJ	NONE
LCATM-65F	Light Weight Captive Air Training Missile IR	CWLI	NONE
	HELLFIRE		
AGM-114B	Guided Missile Surface Attack	PC91	RCM
ATM-114B	Guided Missile Surface Attack (Inert Warhead)	WF90	RCM
M34	Dummy Guided Missile	2W59	NONE
M36E1	Training Guided Missile	5W98	NONE
AGM-114K	Guided Missile Surface Attack (Duel Warhead)	PV30	RCM
AGM-114K-2	Guided Missile Surface Attack (IM Warhead)	PU72	RCM
AGM-114M	Guided Missile Surface Attack (Blast Fragmentation Warhead)	WF15	RCM
AGM-114N	Guided Missile Surface Attack (MAC Warhead)	WF96	RCM
M36E3	Training Guided Missile	CWKK	NONE
	TOW BGM-71		
BTM-71C	GM Dummy	JW74	NONE
BGM-71E-5B	GM Tact	PU16	RCM

ALL-UP-ROUNDS - contd.

TYPE/MODEL/ SERIES	NOMENCLATURE	DODIC/NALC or PART NO.	SIST
	AMRAAM		
AIM-120A	GM Tact	PU46	RCM
AIM-120B	GM Tact	PU50	RCM
AIM-120C	GM Tact	PU69	RCM
AIM-120C-4	GM Tact	PFD7	RCM
AIM-120C-5	GM Tact	WF41	RCM
AIM-120C-6	GM Tact	WF51	RCM
AIM-120C-7	GM Tact	WF89	RCM
CATM-120A	GM Training	PY78	NONE
CATM-120B	GM Training	PY97	NONE
CATM-120C	GM Training	PY69	NONE
CATM-120C	GM Training	XY44	NONE
JAIM-120A	GM Instumented	PV85	RCM
JAIM-120B	GM Instumented	PU74	RCM
JAIM-120C-4	GM Instumented	PU73	RCM
JAIM-120C-5	GM Instumented	WF48	RCM
JAIM-120C-6	GM Instumented	WF52	RCM
JAIM-120C-7	GM Instumented	WF92	RCM

ALL-UP-ROUNDS - contd.

TYPE/MODEL/ SERIES	NOMENCLATURE	DODIC/NALC or PART NO.	SIST
	JOINT STAND-OFF WEAPON (JSOW) AGM-154		
AGM-154A	GM Tact	3181AS11000-1/PFB7	20 Yrs
AGM-154A	GM Tact	4211053-1/PFB8	20 Yrs
AGM-154A	GM Tact	4211053-2/PFB8	20 Yrs
AGM-154A	GM Tact	4211053-3/PFB8	20 Yrs
AGM-154A	GM Tact	4211009-3/PFB8	20 Yrs
AGM-154A	GM Tact	4211027-1/WF26	20 Yrs
AGM-154A	GM Tact	4211027-2/WF26	20 Yrs
AGM-154A	GM Tact	4211077-1/WF87	20 Yrs
AGM-154A	GM Tact	4211077-2/WF87	20 Yrs
AGM-154A	GM Trainer	3181AS11000-6/PFB9	NONE
AGM-154A	DATM	3181AS71006/BWGD	NONE
AGM-154A	CATM	8001000/CWME	NONE
AGM-154A	CATM	8001050/CWME	NONE
AGM-154A	CATM	4211109-1/BWKN	NONE
AGM-154C	CATM	4211131-1/TBD	NONE
AGM-154C	GM Tact	4211830-1/WG09	20 Yrs
AGM-154C	GM Tact	4211087-01-207/WH61	20 Yrs
AGM-154C-1	GM Tact	4211115-1-207/WJ03	20 Yrs

SPARROW AIM/RIM-7

TYPE or MK/MOD	NOMENCLATURE	DODIC/NALC or PART NO.	SERVICE/ SHELF LIFE	USED ON
MK 102 MOD 2	Rkt Mtr Trng Inert	IW36	Not Applicable	RIM-7M
WGU-5A/B, B/B, C/B, D/B, E/B, F/B	G&C Sect	PL26	Not Applicable	AIM-7M
WGU-5A/B, B/B, C/B, D/B, E/B, F/B	G&C Sect	PL27	Not Applicable	AIM/RIM-7M
WCU-5A/B, B, B/B, C/B, D/B, E/B, F/B, G/B, H/B	Contl Sect	PH61	Not Applicable	AIM/RIM-7M/PI
MK 58 MOD 3	Rkt Mtr	V378	RCM	AIM/AIM-7M/P
MK 58 MOD 4	Rkt Mtr	V523	RCM	RIM-7M/VL/P
MK 58 MOD 5	Rkt Mtr	V378	RCM	AIM/ATM-7M/P
Ignition Assy	----------	1131AS202	RCM	MK 58 MOD 5
MK 58 MOD 6	Rkt Mtr	VG23	RCM	AIM/ATM-7M/P
MK 58 MOD 7	Rkt Mtr	VG26	RCM	RIM/RTM-7M/VL/P
Igntr	Igntr	2824888	RCM	MK 58 MODs
Igntr	Igntr	4904228	RCM	MK 58 MODs
Igntr	Igntr	1131AS114	RCM	MK 58 MODs
WAU-10A/B	Whd Sect	V498	Not Applicable	AIM-7M/P
WAU-10/B	Whd Sect	V404	Not Applicable	AIM-7M/P
MK 71 MOD 0	Whd	----------	RCM	WAU-10/B, WAU-10A/B
WAU-17/B	Whd Sect	V548	Not Applicable	AIM/RIM-7M/P
WAU-17A/B	Whd Sect	V548	Not Applicable	AIM/RIM-7M/P
WAU-17(D-4)/B	Dummy Whd Sect	1W74	Not Applicable	Inert Operational Missile
MK 38 MOD 2	Fz Bstr	V621	RCM	WAU-17A/B, WAU-10A/B
WDU-27B	Whd	1375AS110	RCM	WAU-17/B, WAU-17A/B
MK 33 MOD 0	S&A Dev	HW52	RCM	WAU-10A/B,WAU-10/B, WAU-17/B, WAU-17A/B
WCU-15A/B	Contl Sect	PT52	Not Applicable	AIM/VL/RIM-7M/PII
WGU-6B/B	Guid Sect	XW29	Not Applicable	AIM/RIM-7M
WGU-6B/B	Guid Sect	PT65	Not Applicable	AIM/RIM-7M
WGU-6C/B	Guid Sect	PT87	Not Applicable	AIM/RIM-7M
WGU-6D/B	Guid Sect	PG51	Not Applicable	AIM/RIM-7PI
WGU-23A/B	Guid Sect	PT90	Not Applicable	AIM/VL/RIM-7M
WGU-23D/B	Guid Sect	PT54	Not Applicable	AIM/VL/RIM-7PII
WGU-23E/B	Guid Sect	PG68	Not Applicable	AIM/VL/RIM-7PII FFT

SIDEWINDER AIM-9

TYPE or MK/MOD	NOMENCLATURE	DODIC/NALC or PART NO.	SERVICE/ SHELF LIFE	USED ON
WGU-4A/B	G&C Sect	PM55	N/A	AIM/CATM/NATM-9M
WGU-4C/B	G&C Sect	PM66	N/A	AIM/CATM/NATM-9M
WGU-4D/B	G&C Sect	PM67	N/A	AIM/CATM/NATM-9M
WGU-4E/B	G&C Sect	PV69	N/A	AIM/CATM/NATM-9M
MK 6 MODs 1,2	Gas Gen (Bermite)	1517482	RCM	WGU-4A/B, WGU-4C/B, WGU-4D/B, WGU-4E/B
Therm Battery	Battery	2602147	RCM	WGU-4A/B, WGU-4C/B, WGU-4D/B, WGU-4E/B
WGU-4A(T-2)/B	G&C Sect	1W11	N/A	CATM-9M
MK-36 MOD 11	Rkt Mtr	V888	35 Yrs	AIM, NATM-9M
MK 36 MOD 13	Rkt Mtr	VG19	35 Yrs	AIM, NATM-9M
MK 57 MOD 3	Rkt Mtr Inert	V468	N/A	CATM-9M
MK 57 MOD 4	Rkt Mtr Inert	VN12	N/A	CATM-9M
MDU-27A/A	Missile Dummy Unit	BWFW	N/A	CATM-9M
MDU-27B/A	Missile Dummy Unit	P578	N/A	CATM-9M
MK 297 MOD 1	Igntr	639AS4612	RCM	MK 36 MODs 11,13
MK 70 MOD 1	Whd Dummy	V036	N/A	CATM-9M
WDU-17/B	Whd	V535	RCM	AIM-9M
WDU-9A/B	Whd Exer	YW58	RCM	NATM-9M
MK 13 MOD 2	S&A Device	V259	RCM	AIM,NATM-9M
DSU-15/B	Tgt Det Dev	HW53	RCM	AIM,NATM-9M
DSU-15A/B	Tgt Det Dev	YW20	RCM	AIM,NATM-9M
DSU-15B/B	Tgt Det Dev	V569	RCM	AIM,NATM-9M
Therm Battery	Battery	639AS895	RCM	DSU-15/B, DSU-15B/B, DSU-15A/B
DSU-15(T-1)/B	Tgt Det Dev Trng	HW99	N/A	CATM-9M
DSU-15(T-1)A/B	Tgt Det Dev Trng	2W41	N/A	CATM-9M
BSU-32/B	Fin (1 Each)	YW90	N/A	AIM/CATM/NATM-9M
BSU-32/B	Fin (Set of 4)	GW86	N/A	AIM/CATM/NATM-9M
MK 1 MOD 2	Wing (1 Each)	MW95	N/A	AIM/CATM/NATM-9M
MK 1 MOD 2	Wing (Set of 4)	YW26	N/A	AIM/CATM/NATM-9M
MK 1 MOD 5	Wing (1 Each)	P526	N/A	AIM/CATM/NATM-9M
MK 1 MOD 5	Wing (Set of 4)	P567	N/A	AIM/CATM/NATM-9M
MK 1 MOD 6	Wing (1 Each)	CWPR	N/A	CATM-9M

AMRAAM AIM-120

TYPE or MK/MOD	NOMENCLATURE	DODIC/NALC or PART NO.	SERVICE/ SHELF LIFE	USED ON
None Assigned	Wing Assy	PG64	Not Applicable	AIM-120A,B; CATM-120A,B; JAIM-120A,B
None Assigned	Wing Assy	PT44	Not Applicable	AIM-120C, CATM-120C, JAIM-120C
None Assigned	Fin Assy	PG61	Not Applicable	AIM-120A,B; JAIM-120A,B
None Assigned	Fin Assy	PT45	Not Applicable	AIM-120C, JAIM-120C
None Assigned	Fin Assy	BWDC	Not Applicable	CATM-120A,B
None Assigned	Fin Assy	BWFC	Not Applicable	CATM-120C
None Assigned	Wing and Fin Set (4 ea)	BWBK	Not Applicable	AIM-120A,B
None Assigned	Wing and Fin Set (4 ea)	BWEP	Not Applicable	AIM-120C
None Assigned	Buffer Connector	BWFB	RCM	AIM-120A,B,C; CATM-120A,B,C; JAIM-120A,B,C

HARPOON A/R/UGM-84

TYPE or MK/MOD	NOMENCLATURE	DODIC/NALC or PART NO.	SERVICE/ SHELF LIFE	USED ON
AN/DSQ-28D	Guid Sect	PT95	Not Applicable	A/R/UGM-84A Series
AN/DSQ-44D	Guid Sect	1657AS0505-5	Not Applicable	A/R/UTM-84A Series
AN/DSQ-44F	Guid Sect	1657AS0505-7	Not Applicable	A/R/UTM-84A Series
WAU-3B(V)/B	Whd Sect	1657AS0517-1	Not Applicable	A/R/UTM-84A Series
WAU-3C(V)/B	Whd Sect	VA32	Not Applicable	A/R/UTM-84A Series
WAU-3F(V)/B	Whd Sect	VA31	Not Applicable	A/R/UTM-84A Series
WAU-3G(V)/B	Whd Sect	VA32	Not Applicable	A/R/UTM-84A Series
WAU-3(D-1)/B	Whd Sect Inert	1657AS0524-1	Not Applicable	CATM-84D-1
WDU-18/B	Whd	V540	Not Applicable	WAU-3 Series except for WAU-3(D-1)/B
WDU-18(D-1)/B	Whd Inert	V039	Not Applicable	WAU-3(D-1)/B
FMU-141/B	S-A/CF	3W10	RCM	WAU-3 Series
MK 44 MOD 1	Fuze Booster	V606	RCM	WAU-3 Series except for WAU-3(D-1)/B
FZU-47/B	Press Probe	3W13	RCM	WAU-3 Series except for WAU-3(D-1)/B
FZU-45A/B	Crush Sensor (RH)	1657AS0537-1,-2	RCM	WAU-3 Series except for WAU-3(D-1)/B
FZU-46A/B	Crush Sensor (LH)	1657AS0536-1,-2	RCM	WAU-3 Series except for WAU-3(D-1)/B
AN/DKT-65(V)1	Exer Sect	5W53	Not Applicable	A/R/UTM-84 Series
AN/DKT-65(V)2	Exer Sect	5W54	Not Applicable	A/R/UTM-84 Series
AN/DKT-65(V)3	Exer Sect	5W55	Not Applicable	A/R/UTM-84 Series
AN/DKT-65B(V)1	Exer Sect	5W53	Not Applicable	A/R/UTM-84 Series
AN/DKT-65B(V)2	Exer Sect	5W54	Not Applicable	A/R/UTM-84 Series
AN/DKT-65B(V)3	Exer Sect	5W55	Not Applicable	A/R/UTM-84 Series
AN/DKT-70(V)2	Exer Sect	BWDP	Not Applicable	A/R/UTM-84 Series
AN/DKT-70(V)3	Exer Sect	BWDQ	Not Applicable	A/R/UTM-84 Series
AN/DKT-70(V)4	Exer Sect	BWDR	Not Applicable	A/R/UTM-84 Series
AN/DKT-83(V)1	Exer Sect	BWFF	Not Applicable	A/R/UTM-84 Series
AN/DKT-83(V)2	Exer Sect	BWFG	Not Applicable	A/R/UTM-84 Series
AN/DKT-83(V)3	Exer Sect	BWFH	Not Applicable	A/R/UTM-84 Series
AN/DKT-83(V)4	Exer Sect	BWFI	Not Applicable	A/R/UTM-84 Series

HARPOON A/R/UGM-84 - contd.

TYPE or MK/MOD	NOMENCLATURE	DODIC/NALC or PART NO.	SERVICE/ SHELF LIFE	USED ON
AN/DKQ-2	FT Tray/	1W09, 1W10,	Not Applicable	AN/DKT-65/70/83 Series
	RFTS	9W74, 9W75	Not Applicable	AN/DKT-65/70/83 Series
None	Telemetry Assy	642AS0450-1,-2,-3	Not Applicable	AN/DKT-65/70/83 Series
		1765AS8400-1,-2,-3	Not Applicable	AN/DKT-65/70/83 Series
		642AS8200-1 (PCM)	Not Applicable	AN/DKT-65/70/83 Series
FMU-141/B	S-A/CF	3W10	RCM	AN/DKT-65/70/83 Series
MK 71 MOD 0	Fuze Booster (Inert)	704AS2350	RCM	AN/DKT-65/70/83 Series
FZU-47/B	Press Probe	3W13	RCM	AN/DKT-65/70/83 Series
FZU-45A/B	Crush Sensor (RH)	1657AS0537-1, -2	RCM	AN/DKT-65/70/83 Series
FZU-46A/B	Crush Sensor (LH)	1657AS0536-1, -2	RCM	AN/DKT-65/70/83 Series
A/B44G-1E	Sust Sect	BWEA	Not Applicable	A/R/UGM-84D Series and A/R/UTM-84D Series
A/B44G-1F	Sust Sect	BWEB	Not Applicable	A/R/UGM-84D Series and A/R/UTM-84D Series
A/B44G-1G	Sust Sect	BWEC	Not Applicable	A/R/UGM-84D Series and A/R/UTM-84D Series
A/B44G-1H	Sust Sect	BWEC	Not Applicable	A/R/UGM-84D Series and A/R/UTM-84D Series
A/B44G-1J	Sust Sect	BWEE	Not Applicable	A/R/UGM-84D Series and A/R/UTM-84D Series
BA-596/D	Battery, Wet, Primary	3W15	RCM	A/B44G-1 Series
J402-CA-400	Eng	JW89	RCM	A/B44G-1 Series
WCU-1/B	Cntl Sect	PT99	Not Applicable	A/R/UGM-84D Series and A/R/UTM-84D Series
MK 67 MOD 1	Bstr Sect CAP/CAN	JW96	RCM	RGM/RTM-84D-4/5 and UGM/UTM-84D-1
MK 68 MOD 0	Bstr Sect TARTAR	JW77	RCM	RGM-84D-2 and RTM-84D-2
MK 96 MOD 0/1	Rkt Mtr	3W11	RCM	MK 67 MOD 1 and MK 68 MOD 0
MK 289 MOD 0/1	Igntr/Arming Firing Device	3W18	RCM	MK 67 MOD 1 and MK 68 MOD 0
MK 7 MOD 1	Canister, SH RES	5W60	RCM	RGM-84D-4 and RTM-84D-4
None	Kit, Firing Can SH RES	BWEN	Not Applicable	MK 7 MOD 0 Can SH RES

HARPOON A/R/UGM-84 - contd.

TYPE or MK/MOD	NOMENCLATURE	DODIC/NALC or PART NO.	SERVICE/ SHELF LIFE	USED ON
MK 12 MOD 1	Canister, TH Wall	BWEL	RCM	RGM-84D-5 and RTM-84D-5
None	Kit, Firing Can TH Wall	BWEM	Not Applicable	MK 12 MOD 1 TWC
A/W-99-1A	Capsule	JW81, 3W05	RCM	UGM-84D-1 and UTM-84D-1
A/W-99-1B	Capsule	BWCD	RCM	UGM-84D-1 and UTM-84D-1
None	Kit, Air Launch	3W97	Not Applicable	AGM-84D-1 and ATM-84D-1
None	Kit, TARTAR Launch	BWEK	Not Applicable	RGM-84D-2 and RTM-84D-2
None	Kit, CAP/CAN	BWEI	Not Applicable	BGM-84D-1 and BTM-84D-1

SLAM-ER AGM-84H-1 / ATM-84H-1 / CATM-84H-1A

TYPE or MK/MOD	NOMENCLATURE	DODIC/NALC or PART NO.	SERVICE/ SHELF LIFE	USED ON
AN/DSQ-61	Guide Sect	1943AS1102-5	Not Applicable	AGM-84H-1, ATM-84H-1, CATM-84H-1
AN/DSQ-61A	Guide Sect (Flex Cable)	1943AS1102-6	Not Applicable	AGM-84H-1, ATM-84H-1, CATM-84H-1A
TBD	Guide Sect (Round Cable)	1943AS1102-7	Not Applicable	AGM-84H-1, ATM-84H-1, CATM-84H-1A
WAU-30/B	Whd Sect (Round Cable)	1943AS5025-1	Not Applicable	AGM-84H-1
TBD	Whd Sect (Flex Cable)	1943AS5025-2	Not Applicable	AGM-84H-1
WAU-30(T-1)/B	Whd Sect Trng (Rd Cable)	1943AS5026-1	Not Applicable	CATM-84H-1A
TBD	Whd Sect Trng (Flex Cable)	1943AS5026-2	Not Applicable	CATM-84H-1A
FZU-56/B	Pressure Probe, Live	1943AS5030-1	RCM	WAU-30/B
FZU-56(D-1)/B	Pressure Probe, Inert	1943AS0531-1	RCM	WAU-30(T-1)/B
WDU-40/B	Whd	1765AS5100-1	Not Applicable	WAU-30/B
WDU-40(D-1)/B	Whd Inert	1765AS5140-1	Not Applicable	WAU-30(T-1)/B
FMU-155/B	S-A/CF	1765AS5150-1	RCM	WAU-30/B
FMU-155(D-1)/B	S-A/CF Inert	1765AS5142-1	RCM	WAU-30(T-1)/B
BBU-60/B	Fz Booster	1765AS5180-1	RCM	WAU-30/B
MK 71 MOD 0	Fz Booster, Inert	704AS2350	RCM	WAU-30(T-1)/B
AN/DKT-81	Exer Sect	1943AS8025-1	Not Applicable	ATM-84H-1
A/B44G-5	Sust Sect	1943AS6025-1	Not Applicable	AGM-84H-1, ATM-84H-1
A/B44G-5(D-1)	Sust Sect, Inert	1943AS6051-1	Not Applicable	CATM-84H-1A
J402-CA-400	Engine	719401-2	RCM	A/B44G-5, A/B44G-5(D-1)
BA-596/B	Battery, Wet	642AS0755-1	RCM	A/B44G-5
TBD	Battery, Inert	1765AS6005-1	RCM	A/B44G-5(D-1)
WCU-24/B	Control Sect	1943AS1800-1	Not Applicable	AGM-84H-1, ATM-84H-1, CATM-84H-1A
AN/DKT-79	PCM Telemetry Tray	642AS8200	Not Applicable	AN/DKT-81
Not Assigned	RFTS Tray Assy	642AS2131-2,-4,-5	Not Applicable	AN/DKT-81

HARM AGM-88B/C

TYPE or MK/MOD	NOMENCLATURE	DODIC/NALC or PART NO.	SERVICE/ SHELF LIFE	USED ON
WGU-2C/B	Guid Sect	PG74/P511	Not Applicable	AGM-88C, CATM-88C
WGU-2B/B	Guid Sect	PT39	Not Applicable	AGM-88B, ATM-88B, CATM-88B
WGU-2(D-2)/A	Guid Sect Dummy	HW06	Not Applicable	DATM-88A
WCU-2/B	Cntl Sect	PH64	Not Applicable	AGM-88B, CATM-88B
DSU-19/B	Detector, Target	P540	Not Applicable	WCU-2/B
Battery P-465	Battery Primary Type	FW03	30/35 Yrs*	WCU-2/B
WCU-2/B	Cntl Sect	PT50	Not Applicable	AGM-88B/C, CATM-88B/C, ATM-88B
DSU-19A/B	Detector, Target	P541	RCM	WCU-2/B
Battery Primary Type	Battery Primary Type	FW03	RCM	WCU-2/B
WCU-2(D)-2/A	Cntl Sect Dummy	HW17	Not Applicable	DATM-88A
WAU-7/B	Whd	V557	RCM	AGM-88B
WAU-7(T-1)/B or CF/WAU-11/B	Whd, Practice Inert	9W67	Not Applicable	CATM-88B/C, ATM-88B
WAU-11/B or WAU-7(T-1)/B	Whd, Dummy	9W91	Not Applicable	DATM-88A
WAU-27/B	Whd, Tact	V998	RCM	AGM-88C
FMU-111 (XCL-1)/B	Fuze	V110	RCM	WAU-7/B
FMU-129/B	Fuze, Inert Trng	704AS2360	Not Applicable	WAU-11/B
MK 44 MOD 1	Booster, Fuze	V606	RCM	FMU-111/B
MK 71 MOD 0	Booster, Fuze Inert	------	Not Applicable	FMU-129/B
YSR-113-TC-1	Rkt, Mtr	V496	RCM	AGM-88B, ATM-88B
TSR-113-TC-1	Rkt, Mtr, Inert	HW18, 3W08	Not Applicable	CATM-88B, DATM-88B
TSR-113-TC-2	Rkt, Mtr, Inert	------	Not Applicable	CATM-88B, DATM-88B
------	Ign/Safe and Arm Assembly	FW04	RCM	YSR-113-TC-1
------	Ign/Assembly, Trng	704AS4284	Not Applicable	TSR-113-TC-1 TSR-113-TC-2

*** Service Life for AGM-88B Load is 30 Yrs/Service Life for AGM-88C Load is 35 yrs.**

AARGM AGM-88E

TYPE or MK/MOD	NOMENCLATURE	DODIC/NALC or PART NO.	SERVICE/ SHELF LIFE	USED ON
WGU-48/B	Guid Sect	TBD	Not Applicable	AGM-88E, CATM-88E
WGU-48(T-1)/B	Guid Sect Dummy	704AS12260	Not Applicable	DATM-88E
WCU-30/B	Cntl Sect	TBD	Not Applicable	AGM-88E, CATM-88E
DSU-19/B	Detector, Target	P541	RCM	WCU-30/B
Battery P-465	Battery Type	7135020	RCM	WCU-30/B
WCU-30/B	Cntl Sect Dummy	704AS3703-2	Not Applicable	DATM-88E
WAU-7/B	Whd	V557	RCM	AGM-88E
WAU-7(T-1)/B or CF/WAU-11/B	Whd, Practice Inert	9W67	Not Applicable	CATM-88E
WAU-11/B or WAU-7(T-1)/B	Whd, Dummy	9W91	Not Applicable	DATM-88E
FMU-111 (XCL-1)/B	Fuze	V110	RCM	WAU-7/B
FMU-129/B	Fuze, Inert Trng	704AS2360	Not Applicable	WAU-11/B
MK 44 MOD 1	Booster, Fuze	V606	RCM	FMU-111/B
MK 71 MOD 0	Booster, Fuze Inert	------	Not Applicable	FMU-129/B
YSR-113-TC-1	Rkt, Mtr	V496	RCM	AGM-88E, ATM-88E
TSR-113-TC-1	Rkt, Mtr, Inert	HW18, 3W08	Not Applicable	CATM-88E, DATM-88E
------	Ign/Assembly	FW04	RCM	YSR-113-TC-1
------	Ign/Assembly, Trng	704AS4284	Not Applicable	TSR-113-TC-1

MAVERICK AGM-65

TYPE or MK/MOD	NOMENCLATURE	DODIC/NALC or PART NO.	SERVICE/ SHELF LIFE	USED ON
WGU-9/B	G&C Section	2W49	Not Applicable	AGM-65E
WGU-13/B	G&C Section	PY40	Not Applicable	CATM-65F
WBU-2/B	Center-Aft-Section	2W92	RCM	AGM-65E/F
WPU-8(T-2)/B	Center-Aft-Section (Training)	2W91	Not Applicable	TGM-65/E
--------	Hydraulic Actuation System	V034	Not Applicable	WBU-2/B

2.75 INCH WAFAR

TYPE or MK/MOD	NOMENCLATURE	DODIC/NALC or PART NO.	SERVICE/ SHELF LIFE	USED ON
MK 66 MOD 2	Rkt Mtr	HA03	RCM	NAVAIR 11-75A-92
MK 66 MOD 4	Rkt Mtr	HA07	RCM	NAVAIR 11-75A-92
MK 67 MOD 1	Whd	H892, H893	RCM	NAVAIR 11-75A-92
M151	Whd	H842, H843	RCM	NAVAIR 11-75A-92
M156	Whd	H855	RCM	NAVAIR 11-75A-92
WDU-4A/A	Whd	HY71	RCM	NAVAIR 11-75A-92
MK 149	Whd	HA50	RCM	NAVAIR 11-75A-92
MK 352 MOD 2	Whd Fz	J344	RCM	NAVAIR 11-75A-92
FMU-90/B	Whd Fz	J289	RCM	NAVAIR 11-75A-92
M423	Whd Fz	J349	RCM	NAVAIR 11-75A-92
M427	Whd Fz	J346	RCM	NAVAIR 11-75A-92
M429	Whd Fz	--------	RCM	NAVAIR 11-75A-92
M257	Whd	H812, H813	RCM	NAVAIR 11-75A-92
M278	Whd	HA06	RCM	NAVAIR 11-75A-92
WTU-1/B	Whd	H663, HA23	RCM	NAVAIR 11-75A-92
WTU-14/B	Whd	H664	RCM	NAVAIR 11-75A-92
MK 146	Whd	HA32, HA33	RCM	NAVAIR 11-75A-92

5-INCH ZUNI WAFAR

TYPE or MK/MOD	NOMENCLATURE	DODIC/NALC or PART NO.	SERVICE/ SHELF LIFE	USED ON
MK 71 MOD 1	Rkt Mtr	J271	RCM	NAVAIR 11-75A-92
MK 71 MOD 2	Rkt Mtr	HA44	RCM	NAVAIR 11-75A-92
MK 34 MOD 0, 2	Whd	H929, H943	RCM	NAVAIR 11-75A-92
MK 24 MOD 0	Whd	H930	RCM	NAVAIR 11-75A-92
MK 24 MOD 1	Whd	H939	RCM	NAVAIR 11-75A-92
MK 32 MOD 0	Whd	H931	RCM	NAVAIR 11-75A-92
MK 33 MOD 1	Whd	HW40	RCM	NAVAIR 11-75A-92
MK 63 MOD 0	Whd	H933	RCM	NAVAIR 11-75A-92
MK 188 MOD 0	Whd Fz	J345	RCM	NAVAIR 11-75A-92
MK 93/M414A1	Whd Fz	J329	RCM	NAVAIR 11-75A-92
MK 352 MOD 2	Whd Fz	J344	RCM	NAVAIR 11-75A-92
FMU-90/B	Whd Fz	J289	RCM	NAVAIR 11-75A-92
MK 6 MODs	Whd	H945	RCM	NAVAIR 11-75A-92
MK 32 MOD 1	Whd	H886	RCM	NAVAIR 11-75A-92
WTU-11/B	Whd	H946, HA49	RCM	NAVAIR 11-75A-92
RR-182A/L	Whd	HW96	RCM	NAVAIR 11-75A-92
BBU-15/B	Adapt Boost	HW42	RCM	NAVAIR 11-75A-92

JATO/RATO

TYPE or MK/MOD	NOMENCLATURE	DODIC/NALC or PART NO.	SERVICE/ SHELF LIFE	USED ON
MK 6 MODs 1, 2	RM 15KS-1000 (Aerojet) (produced before 1956)	H340	22 Yrs (Note 1)	C-130, KC-130, LC-130
MK 6 MODs 1, 2	RM 15KS-1000 (Aerojet) (1956 and subsequent production years)	H340	(Note 2)	C-130, KC-130, LC-130
MK 6 MODs 1, 2	RM 15KS-1000 (Bermite)	H340	(Note 2)	C-130, KC-130, LC-130
MK 6 MODs 1, 2	RM 15KS-1000 (Canadian Bristol)	H340	(Note 2)	C-130, KC-130, LC-130
MK 6 MODs 1, 2	RM 15KS-1000 (Indian Head)	H340	(Note 2)	C-130, KC-130, LC-130
MK 165 MOD 0	Igntr	H403	RCM	MK 6 MODs 1, 2

Note: 1. These units are all overage and should no longer be in Fleet use. These units can be inspected in accordance with AWB-292 and then used by the Blue Angels for demonstration purposes.

2. All MK 6 MODs 1, 2 JATOs which have been inspected and certified in accordance with AWB-292 are in Condition Code A per NAR 0133-95. Motors must be certified in accordance with AWB-292 prior to use. Certified motors are indicated on the motor exterior along with the certification date. All motors which have not been inspected and certified in accordance with AWB-292 are in Condition Code P per NAR 0134-95.

MK 165 MOD 0	Igntr	H403	RCM	MK 6 MODs 1, 2
MK 165 MOD 1	Igntr	H403	RCM	MK 6 MODs 1, 2
MK 23 MOD 1	RM 2.2 KS-11,000	H350	RCM	BQM-34 Target
MK 296 MOD 0	Igntr	H422	RCM	MK 23 MODs 2, 3
MK 117 MOD 0	RM 1.0 ES-2400	H341	RCM	BQM-74 Target
MK 125 MOD 1	RATO Rocket Motor	H311	RCM	Pioneer/UAV
MK 125 MOD 2	RATO Rocket Motor	HA19	RCM	Pioneer/UAV
MK 128 MOD 0, 1	JATO Rocket Motor	H313, H314	RCM	C-130, KC-130, LC-130
MK 309 MOD 0	Igntr	H388	RCM	MK 128 MODs 0, 1

APKWS II

TYPE or MK/MOD	NOMENCLATURE	DODIC/NALC or PART NO.	SERVICE/ SHELF LIFE	USED ON
WGU-59/B	RKT, HE, 2.75” Guidance Section	HA79	Not Applicable	NAVAIR 11-75A-92

PYROTECHNICS

TYPE or MK/MOD	NOMENCLATURE	DODIC/NALC or PART NO.	SERVICE/ SHELF LIFE	USED ON
M112A1	Photoflash	L135, L136	RCM	NAVAIR 11-15-7
M123A1	Photoflash	L139, L140	RCM	NAVAIR 11-15-7
MK 28 MODs	Tgt Flare	LW39	RCM	NAVAIR 11-15-7
MK 58 MODs	Marine Marker	L580, L585	RCM	NAVAIR 11-15-7
MK 25 MODs	Marine Marker	L554	RCM	NAVAIR 11-15-7
MK 24 MODs	Parachute Flare	L407	RCM	NAVAIR 11-15-7
MK 24/45	Flare	L416, L420	RCM	NAVAIR 11-15-7
LUU 2B/B/MK 45	Flare	L423, L424, L426, L427, L441, L442, L473, L411	RCM	NAVAIR 11-15-7
MK 89 MOD 0	Smoke Signal	L169	RCM	NAVAIR 11-15-7
AN-M37	Signal	L225	RCM	NAVAIR 11-15-7
AN-M38	Signal	L226	RCM	NAVAIR 11-15-7
AN-M39	Signal	L227	RCM	NAVAIR 11-15-7
MK 6 MODs	Signal	L525	RCM	NAVAIR 11-15-7

AIRBORNE COUNTERMEASURES PYROTECHNICS

TYPE or MK/MOD	NOMENCLATURE	DODIC/NALC or PART NO.	SERVICE/ SHELF LIFE	USED ON
ALE-50	Towed Decoy	DWCL	RCM	NAVAIR 11-140-7
ALE-55	Towed Decoy FOTD	DWDQ	RCM	NAVAIR 11-140-7
GENX	RT-1489/ALE	CWCG	RCM	NAVAIR 11-140-7
M206	Decoy Flare 1X1X8	L410	2 Yrs/10 Yrs	NAVAIR 11-140-7
MJU-27A/B	Decoy Device	EWAA	RCM	NAVAIR 11-140-7
MJU-32/B	Decoy Flare	LA01	RCM	NAVAIR 11-140-7
MJU-32A/B	Decoy Flare	LA49	RCM	NAVAIR 11-140-7
MJU-38/B	Decoy Flare	LA02	RCM	NAVAIR 11-140-7
MJU-38A/B	Decoy Flare	LA50	RCM	NAVAIR 11-140-7
MJU-49/B	Decoy Device	DWCI	RCM	NAVAIR 11-140-7
MJU-50/B	Decoy Flare 1X1X8	LA19	1 Yr/9 Yrs	NAVAIR 11-140-7
MJU-52/B	BOL IR	DWCO	RCM	NAVAIR 11-140-7
MJU-55/B	Decoy Flare	LA35	RCM	NAVAIR 11-140-7
MJU-55A/B	Decoy Flare Device	TBD	RCM	NAVAIR 11-140-7
MJU-57/B	Decoy Device	LA38	RCM	NAVAIR 11-140-7
MJU-57A/B	Decoy Device	LA55	RCM	NAVAIR 11-140-7
MJU-61A/B	Decoy Device 1X1X8	LA66	RCM	NAVAIR 11-140-7
MJU-61/B	Decoy Flare 1X1X8	LA42	RCM	NAVAIR 11-140-7
MJU-64/B	Decoy Device 1X1X8	LA43	RCM	NAVAIR 11-140-7
MJU-66/B	Decoy Device 1X1X8	LA61	RCM	NAVAIR 11-140-7
RR-179/AL	CHAFF Device	MW93	1 Yr/RCM	NAVAIR 11-140-7
SM-875A/ALE	SIM Flare	LA10	RCM	NAVAIR 11-140-7
SM-875B/ALE	SIM Flare	LA40	RCM	NAVAIR 11-140-7

UNDERWATER SOUND SIGNALS

TYPE or MK/MOD	NOMENCLATURE	DODIC/NALC or PART NO.	SERVICE/ SHELF LIFE	USED ON
MK 57 MOD 0	SUS	SW07	RCM	NAVAIR 11-1-107
MK 59 MOD 1A	SUS	SW05	RCM	NAVAIR 11-1-107
MK 59 MOD 5	SUS	SW19, SW22	RCM	NAVAIR 11-1-107
MK 61 MOD 0	SUS	SW08	RCM	NAVAIR 11-1-107
MK 64 MOD 0	SUS	SW09	RCM	NAVAIR 11-1-107
MK 82 MOD 0	SUS	SW30	RCM	NAVAIR 11-1-107
MK 82 MOD 1	SUS	SW37	RCM	NAVAIR 11-1-107
MK 83 MOD 0	SUS	SW33	RCM	NAVAIR 11-1-107
MK 84 MOD 0	SUS	SW06	10 Yrs	NAVAIR 11-1-107
MK 84 MOD 1	SUS	SW39	10 Yrs	NAVAIR 11-1-107
MK 94 MOD 0	SUS	SW44	RCM	NAVAIR 11-1-107
MK 128 MOD 0	SUS	SW38	RCM	NAVAIR 11-1-107
MK 4 MOD 0	Exp Section	S547	RCM	NAVAIR 11-1-107
MK 4 MOD 2	Exp Section	S549	RCM	NAVAIR 11-1-107
MK 8 MOD 0	Exp Section	S537	RCM	NAVAIR 11-1-107

GUN AMMUNITION

TYPE or MK/MOD	NOMENCLATURE	DODIC/NALC or PART NO.	SERVICE/ SHELF LIFE	USED ON
MK 103 MODs	20 mm Dummy	A807	RCM	MK 11, MK 12
MK 105 MOD 0	20 mm TP	A811	RCM	MK 11, MK 12
MK 105 MOD 1	20 mm TP	A874	RCM	MK 11, MK 12
MK 105	20 mm TP	A876	RCM	MK 12
MK 109	20 mm Firing Circuit Tester	A899	RCM	MK 11, MK 12
M51A3	20 mm Dummy	A924	RCM	M61, M197
M55 SERIES	20 mm Linked TP	A926	RCM	M61, M197
M55A2	20 mm TP	A891	RCM	M61
M55A2 + N220	20 mm TP/TP-T	A896	RCM	M61, M197
M56	20 mm HEI	A890	RCM	M61, M197
M56	20 mm Linked HEI	A919	RCM	M61, M197
M56A2 + M242	20 mm Linked HEI/HEI-T	A658	RCM	M61, M197
M56A3 + M242	20 mm Linked HEI/HEI-T	A665	RCM	M61, M197
M220	20 mm TP-T	A651	RCM	M61
M242	20 mm Linked HEI-T	A659	RCM	M61, M197
PGU-27A/B	20 mm TP	AA24	RCM	M61, M197
PGU-27A/B	20 mm Linked TP	AA25	RCM	M61, M197
PGU-27A/B + PGU-30A/B	20 mm Linked TP/TP-T	AA27	RCM	M61, M197
PGU-27/B	20 mm TP	A678	RCM	M61
PGU-27/B	20 mm Linked TP	A772	RCM	M197
PGU-27/B + PGU-30/B	20 mm Linked TP/TP-T	A450	RCM	M61, M197
PGU-28/B	20 mm SAPHEI	A677	RCM	M61
PGU-28/B	20 mm Linked SAPHEI	A764	RCM	M197
PGU-28A/B	20 mm SAPHEI	AA22	RCM	M61, M197
PGU-28A/B	20 mm Linked SAPHEI	AA23	RCM	M61, M197
PGU-28/B + PGU-30/B	20 mm Linked SAPHEI/TP-T	A761	RCM	M197
PGU-28/B + PGU-30/B	20 mm Linked SAPHEI/TP-T	A762	RCM	M197
PGU-28/B + PGU-30/B	20 mm Linked SAPHEI/TP-T	AA26	RCM	M61, M197
PGU-30/B	20 mm TP-T	A679	RCM	M61
PGU-30A/B	20 mm TP-T	AA28	RCM	M61, M197

GUN AMMUNITION - contd.

TYPE or MK/MOD	NOMENCLATURE	DODIC/NALC or PART NO.	SERVICE/ SHELF LIFE	USED ON
PGU-20/U	25 mm API	A979	RCM	GAU-12
PGU-22/U	25 mm HEI	A980	RCM	GAU-12
PGU-23/U	25 mm TP	A978	RCM	GAU-12
PGU-24/U	25 mm Dummy	A968	RCM	GAU-12
PGU-25/U	25 mm HEI	A982	RCM	GAU-12
PGU-32/U	25 mm SAPHEI-T	A990	RCM	GAU-12
PGU-33/U	25 mm TPF-T	AA10	RCM	GAU-12

SMOKEY SAM

TYPE or MK/MOD	NOMENCLATURE	DODIC/NALC or PART NO.	SERVICE/ SHELF LIFE	USED ON
GTR-18A	Rocket Motor	YW33	(Note 1)	
PVU-3A/E	Igniter	H427	(Note 1)	GTR-18A

Note: 1. (A) RCM service life for those rocket motors and igniters manufactured 1988 or later (LOT #IH88A001-35 and subsequent).

(B) Six year service life for those rocket motors and igniters manufactured before 1988.

BOMBS and COMPONENTS

TYPE or MK/MOD	NOMENCLATURE	DODIC/NALC or PART NO.	SERVICE/ SHELF LIFE	USED ON
BLU-109A/B	HTP Bomb	F142	RCM	NAVAIR 11-5A-17
BLU-116A/B	AUP Bomb	EB48	RCM	NAVAIR 11-5A-17
BLU-110A/B	GP Bomb	F288	RCM	NAVAIR 11-5A-17
BLU-110/B	GP Bomb	EB28	RCM	NAVAIR 11-5A-17
BLU-111A/B	GP Bomb	F289	RCM	NAVAIR 11-5A-17
BLU-111/B	GP Bomb	EC80	RCM	NAVAIR 11-5A-17
BLU-117A/B	GP Bomb	EB04	RCM	NAVAIR 11-5A-17
BLU-126/B	GP Bomb	ED01	RCM	NAVAIR 11-5A-17
BLU-129/B	GP Bomb	ED78	RCM	NAVAIR 11-5A-17
MK 82 MODs	GP Bomb	E480, E481, E482, E483, E487, E488, E485, E470, E489	RCM	NAVAIR 11-5A-17
MK 83 MODs	GP Bomb	E507, E508, E509, E510, E513	RCM	NAVAIR 11-5A-17
MK 84 MODs	GP Bomb	F127, F128, F272, F282, F274, F278	RCM	NAVAIR 11-5A-17
MK 77 MODs	Firebomb	E167, EC63	RCM	NAVAIR 11-5A-17
LGTR BDU-59/B Paveway II	Guid Bomb Unit Trng Rd	BWGH	42 mos	NAVAIR 11-140-10
LGTR BDU-59A/B Paveway II	Guid Bomb Unit Trng Rd	EB33	42 mos	NAVAIR 11-140-10
LGTR BDU-59B/B Paveway II	Guid Bomb Unit Trng Rd	BWJG	42 mos	NAVAIR 11-140-10
LGTR BDU-60/B Paveway II	Guid Bomb Unit Trng Rd	BWGI	42 mos	NAVAIR 11-140-10
LGTR BDU-60A/B Paveway II	Guid Bomb Unit Trng Rd	EB34	42 mos	NAVAIR 11-140-10
WCU-10/B	Guid Bomb Unit BMB (GS)	EA15	RCM	NAVAIR 11-140-10
WCU-10A/B	Guid Bomb Unit BMB (GS)	EA16	RCM	NAVAIR 11-140-10
MAU-169E/B	Guid Bomb Unit (CCG)	G495	RCM	NAVAIR 11-140-10
MAU-169F/B	Guid Bomb Unit (CCG)	G496	RCM	NAVAIR 11-140-10
WGU-39/B	Guid Bomb Unit (GCU)	EY71, EA37	RCM	NAVAIR 11-140-10
WGU-39A/B	Guid Bomb Unit (GCU)	EA81	RCM	NAVAIR 11-140-10
WGU-53/B	Guid Bomb Unit (CCG)	EC-86	RCM	NAVAIR 11-140-10

BOMBS and COMPONENTS - contd.

TYPE or MK/MOD	NOMENCLATURE	DODIC/NALC or PART NO.	SERVICE/ SHELF LIFE	USED ON
MAU-169A/B	Guid Bomb Unit (CCG)	FW92, E067	RCM	NAVAIR 11-140-10
MAU-169D/B	Guid Bomb Unit (CCG)	E069	RCM	NAVAIR 11-140-10
MAU-169H/B	Guid Bomb Unit (CCG)	EA65	RCM	NAVAIR 11-140-10
MAU-169L/B	Guid Bomb Unit (CCG)	EC42	RCM	NAVAIR 11-140-10
MAU-209/B	Guid Bomb Unit (CCG)	EB66	RCM	NAVAIR 11-140-10
MAU-209C/B	Guid Bomb Unit (CCG)	ED58	RCM	NAVAIR 11-140-10
KMU-556/B	Guid Set	EA69	Indefinite	NAVAIR 11-140-10
KMU-556A/B	Guid Set	EB35	Indefinite	NAVAIR 11-140-10
KMU-556B/B	Guid Set	EC43	Indefinite	NAVAIR 11-140-10
KMU-556C/B	Guid Set	EC44	Indefinite	NAVAIR 11-140-10
KMU-558/B	Guid Set	EA76	Indefinite	NAVAIR 11-140-10
KMU-558A/B	Guid Set	EB37	Indefinite	NAVAIR 11-140-10
KMU-558B/B	Guid Set	EC47	Indefinite	NAVAIR 11-140-10
KMU-558C/B	Guid Set	EC48	Indefinite	NAVAIR 11-140-10
KMU-559A/B	Guid Set	EB38	Indefinite	NAVAIR 11-140-10
KMU-559B/B	Guid Set	EC49	Indefinite	NAVAIR 11-140-10
KMU-559C/B	Guid Set	EC50	Indefinite	NAVAIR 11-140-10
KMU-572A/B	Guid Set	EB52	Indefinite	NAVAIR 11-140-10
KMU-572B/B	Guid Set	EC51	Indefinite	NAVAIR 11-140-10
KMU-572C/B	Guid Set	EC52	Indefinite	NAVAIR 11-140-10
DSU-38/B	Detector, Laser Illum	ED13	Indefinite	NAVAIR 11-140-10
M904E4	Fz	F739	180 Days/37 Yrs	NAVAIR 11-1F-2
MK 339 MOD 0	Fz	F732	RCM	NAVAIR 11-1F-2
MK 339 MOD 1	Fz	F740	RCM	NAVAIR 11-1F-2
MK 13 MOD 0	Initiator	GW04	180 Days/RCM	NAVAIR 11-1F-2
M9	Fz Delay	G212, G213, G214, G215, G216, G217	RCM	NAVAIR 11-1F-2
M148/T45	Nose Adapter, Bstr	F392, F380, F372	RCM	NAVAIR 11-5A-17
CXU-3A/B	CTG, Signal Prac	F470	RCM	NAVAIR 11-5A-17
CXU-4A/B	CTG, Signal Prac	F534	RCM	NAVAIR 11-5A-17

Note: See service life definition in paragraph D3.

BOMBS and COMPONENTS - contd.

TYPE or MK/MOD	NOMENCLATURE	DODIC/NALC or PART NO.	SERVICE/ SHELF LIFE	USED ON
MK 4 MOD 3	CTG, Signal Prac	F562	RCM	NAVAIR 11-5A-17
DSU-33B/B	Proximity Sensor	BWGF, BY30	5 Yrs/10 Yrs	NAVAIR 11-1F-2
DSU-33C/B	Proximity Sensor	GY33	5 Yrs/10 Yrs	NAVAIR 11-1F-2
FMU-140A/B	Proximity Fuze	EA39	20 Yrs/20 Yrs	NAVAIR 11-5A-17
FMU-139B/B	Fuzing System	EB05, EB40	1 Yr/13 Yrs	NAVAIR 11-5A-17
FMU-139C/B	Fuzing System	EC36, EC67	1 Yr/10 Yrs	NAVAIR 11-5A-17
Fuze Kit	For FMU-139 (contains)	BWHC	RCM	NAVAIR 11-5A-17
	(a) 1 FZU-61/B lanyard			NAVAIR 11-5A-17
	(b) 1 Power cable			NAVAIR 11-5A-17
	(c) 1 FZU-48/B Initiator			NAVAIR 11-5A-17
FZU-48/B	Initiator FMU-139/DSU-33	HY81	RCM	NAVAIR 11-5A-17
FMU-143E/B	Fuzing System	F849		NAVAIR 11-5A-17
	(a) Fuze		2 Yrs/21 Yrs	NAVAIR 11-5A-17
	(b) Initiator (FZU-32B/B)		10 Yrs	NAVAIR 11-5A-17
FMU-143K/B	Fuze	EC19	2 Yrs/10 Yrs	NAVAIR 11-5A-17
FMU-143L/B	Fuze	EC20	2 Yrs/10 Yrs	NAVAIR 11-5A-17
FMU-143M/B	Fuze	EC21	2 Yrs/10 Yrs	NAVAIR 11-5A-17
BSU-85/B	Bomb Fin	1W73	20 Yrs/20 Yrs	NAVAIR 11-140-5

CLUSTER BOMB UNITS (ROCKEYE) CONFIGURATION

TYPE or MK/MOD	NOMENCLATURE	DODIC/NALC or PART NO.	SERVICE/ SHELF LIFE	USED ON
CBU-99B/B	ROCKEYE	EA56	15 Yrs*	NAVAIR 11-140-9
CBU-99(T-1)/A/B	ROCKEYE	E913	13 Yrs*	NAVAIR 11-140-9
CBU-99(T-1)/B	ROCKEYE	E912	RCM	NAVAIR 11-140-9
CBU-99(T-1)/B/B	ROCKEYE	EA57	10 Yrs*	NAVAIR 11-140-9
CBU-100(T-1)A/B	ROCKEYE	E915	13 Yrs*	NAVAIR 11-140-9
CBU-100(T-1)/B	ROCKEYE	E914	RCM	NAVAIR 11-140-9
CBU-100(T-1)B/B	ROCKEYE	EA59	10 Yrs*	NAVAIR 11-140-9
PDU-5/B	Leaflets Filled Dispenser	EB64, EB65	RCM	NAVAIR 11-140-9
SUU-76C/B	Empty Dispenser	EB59, EB60	RCM	NAVAIR 11-140-9

Note: * Service life of weapon is based on the service life of the FMU-140 Fuze.

CBU-78 GATOR CONFIGURATIONS

TYPE or MK/MOD	NOMENCLATURE	DODIC/NALC or PART NO.	SERVICE/ SHELF LIFE	USED ON
CBU-78C/B	Gator	J004	15 Yrs	NAVAIR 11-5A-34/ NAVAIR 11-140-9

Note: *** Service life of weapon is based on the service life of the FMU-140 Fuze.**

APPENDIX E

Naval Conventional Ordnance Operational Logistics Policy

APPENDIX E

Naval Conventional Ordnance Operational Logistics Policy

Table of Contents

Paragraph	Subject	Page
E1	Purpose	E-1
E2	Scope	E-1
E3	Objectives	E-1
E4	Non-Nuclear Ordnance Requirements (NNOR) Process Overview	E-2
E5	Ordnance Positioning, Assessment and Allocation	E-2
E6	Crisis Response	E-3
E7	Summary of Actions and Responsibilities	E-6
E8	Reports	E-8

List of Illustrations

Figure	Title	Page
E-1	Sample Draft Message Template for Standup of Crisis Response Cell	E-4

APPENDIX E

Naval Conventional Ordnance Operational Logistics Policy

E1 Purpose. This appendix defines Naval Conventional Ordnance Operational Logistics Policy in support of Operational Plans (OPLANS), Operational Plans in Concept (CONPLANS), Small Scale Contingencies (SSC) and other operational requirements. This appendix has been reviewed and concurred with by the Naval Ordnance Domain (NOD). It has been completely revised and should be reviewed in its entirety.

E2 Scope. This appendix pertains to all categories of Naval Conventional Ordnance, including sonobuoys and Marine Corps Class V (A) aviation ordnance. However, for Class V (W) ground ammunition managed by Marine Corps Systems Command (MARCORSYSCOM) for inventories owned by Commander, Naval Special Warfare Command (COMNAVSPECWARCOM) and the U.S. Coast Guard, it applies only to storage requirements. This appendix pertains to ordnance positioning and availability assessment during peacetime and repositioning, risk assessment and allocation during times of conflict. Within the context of this appendix, the subsequent terms have the following applicability:

a. Naval Ordnance means all Navy ammunition and Marine Corps aviation ammunition.

b. Navy Fleet Commanders (COMs) include the Commander, U.S. Fleet Forces Command (COMUSFLTFORCOM), Commander, Pacific Fleet (COMPACFLT), Commander U.S. Naval Forces Central Command (COMUSNAVCENT) and Commander, U.S. Naval Forces Europe (COMUSNAVEUR).

c. Marine Forces (MARFORs) include Commander, U.S. Marine Corps Forces Command (COMMARFORCOM) and Commander, U.S. Marine Corps Forces Pacific (COMMARFORPAC).

d. Service components are those Navy and Marine Corps forces designated to conduct or support operations during a Major Combat Operation (MCO), SSC or Military Operation Other Than War (MOOTW).

e. The NOD is a group of Naval ordnance stakeholders chartered by the Chief of Naval Operations (CNO) and Commandant of the Marine Corps (CMC) to improve Naval ordnance readiness and sustainability.

E3 Objectives.

a. Provide an overview of the Non-Nuclear Ordnance Requirements (NNOR) process.

b. Provide operational ordnance positioning policy.

c. Provide policy for the assessment of naval ordnance availability in the event of naval ordnance requirement shortfalls.

d. Establish policy for a Crisis Response Cell (CRC) to enable timely sourcing, distribution and accurate Ammunition Transaction Reporting (ATR) or Transaction Item Reporting (TIR) of naval ordnance during a MCO, SSC or MOOTW as may be required.

e. Assign responsibilities and actions.

E4 Non-Nuclear Ordnance Requirements (NNOR) Process Overview. The Munitions Requirement Process (MRP) directed by Department of Defense's (DOD) Instruction 3000.4 requires each service to develop their portion of DOD total munitions requirements during formulation of the Program Objective Memorandum (POM). The Naval component of the MRP is the NNOR modeling process described in OPNAVINST 8011.9A. The NNOR identifies ordnance ship fill, combat expenditures, maintenance pipeline and Training Testing Requirements (TTR) required to accomplish the Navy and Marine Corps' forward presence mission, and to execute the dual MCO scenario outlined in the Defense Planning Guidance (DPG). The output of the NNOR model provides the Department of the Navy's baseline input into the DOD Planning, Programming, Budgeting, and Execution System (PPBES).

E5 Ordnance Positioning, Assessment and Allocation.

a. Naval ordnance positioning, planning and execution embody a global perspective evolving in concert with development of a joint Navy/Marine Corps positioning process. The integration of a Global Naval Ordnance Positioning Plan (GNOPP) and Requirements Based Load Plan (RBLP) provides for the distribution of ordnance to advance bases located outside the Continental United States (OCONUS) or within the continental United States (CONUS) as predicated by the DPG and assessments of the most likely MCO/SSC scenarios. The GNOPP/RBLP considers storage capacities, most efficient re-supply of supported war fighters, and minimization of strategic lift requirements.

b. RBLP is the authorized process for positioning naval ordnance requirements. The GNOPP will be a primary input to RBLP, providing a comprehensive priority list for filling ALL positioning requirements. GNOPP is governed by business rules/planning factors (ship-fill, training, shore-based units, re-supply) that prioritize and allocate available ordnance by mission and purpose. The NOD is responsible for the GNOPP/RBLP methodology and consolidation of warfighter inputs (i.e. service components). The GNOPP/RBLP model is managed by the Naval Supply Systems Command Global Logistics Support (NAVSUP GLS AMMO). The NAVSUP GLS AMMO will manage the review and update process. The GNOPP/RBLP will be updated annually. The GNOPP business rules can be modified to allow changes to global distribution as required by OPLAN/CONPLAN revisions.

c. Load plans shall be developed for all naval ammunition storage activities. RBLPs will be the aggregate of all customers assigned to, and serviced by a storage activity (i.e., Security Force, Explosive Ordnance Disposal (EOD) units or detachments, Naval Special Warfare (SPECWAR) units, U.S. Coast Guard, etc.). RBLPs will also consider the afloat inventories that are linked to the supporting shore activity.

d. System interface between the GNOPP/RBLP, Logistics Readiness Analysis Module (LRAM) and the Ordnance Information System (OIS) shall be structured to provide identification of positioned ordnance by specific mission and priority. These interfaces shall further provide the capability to modify the priority on a real-time basis and conduct multiple interactions of logistic scenarios, while adjusting visibility and observing the results over multiple simulations. This will facilitate sourcing of ordnance and assessment of inventory compliance with GNOPP/RBLP under alternate operational scenarios. Metrics and indicators shall be developed to measure inventory distribution compliance with GNOPP/RBLP. These assessments compare Class V requirements against inventories and serve as the basis for sourcing ammunition, and Time Phased Force Deployment Data (TPFDD) planning and execution.

NOTE

Currently, the above listed interfaces are not operationally ready to provide the required level of detail to support identification of positioned ordnance by specific mission and priority. The interim solution will be set forth as follows: The Fleet COMs in conjunction with MARFORs will develop/provide to the NAVSUP GLS AMMO CRC a sourcing plan identifying ordnance requirements and priorities of support in relation to the GNOPP rules. Updates to the sourcing plan must be provided as requirements and priorities change.

e. During deliberate planning, each service's calculation of OPLAN munitions requirements are sourced and entered into the Joint Operational Planning and Execution System (JOPES) by the respective service component under the Unified COM for each MCO. To ensure GNOPP/RBLP business rules/planning factors reflect current operational strategies, inventory distribution assessments are required. The Navy COMs, as logistics agents for naval forces, should conduct, in coordination with the MARFORs, periodic assessments of Unified COM requirements in support of MCO, SSC and MOOTW.

E6 Crisis Response.

a. In the event of a crisis involving the unplanned deployment of Naval forces or unexpected expenditure rate of Naval ammunition (e.g., MCO or SSC), CNO (N4) and CMC (ASL) will determine the need to stand up a naval ammunition CRC at NAVSUP GLS AMMO. CNO (N4) will notify Commander, Naval Supply Systems Command (94) of the need for a NAVSUP GLS AMMO CRC in support of conventional ordnance logistics operations. Figure E-1 is a draft message template/letter of instruction (LOI). It will be issued (with necessary changes) by CNO (N4) to establish the NAVSUP GLS AMMO CRC. This message will include required direction and sourcing policy from CNO (N3/N5) and CMC (PP&O) applicable to the crisis. While activated, the NAVSUP GLS AMMO CRC will be under the operational control of CNO (N411).

b. If a requisition cannot be filled, NAVSUP GLS AMMO CRC will identify shortfalls and detail alternatives by fastest possible means via secure communications (i.e., telephone, facsimile, email or naval message) to both CNO (N411) and CMC (ASL). CNO (N411) and CMC (ASL) (where applicable) will elevate shortfall issues to the appropriate headquarters staff to assess and resolve the issue. CNO (N411), after consulting with CMC (ASL), will notify all concerned of the resolution decision via naval message.

c. At the end of hostilities, the CRC shall stand down at the direction of CNO (N411) via naval message. CNO (N411) will provide advance notification of stand down. Prior to stand down, the CRC will ensure a reconciliation of ATRs based on Ordnance Information System Wholesale (OIS-W) data. NAVSUP GLS AMMO shall provide to CNO (N411)/CMC (ASL) the recommended reset plan for reallocation of any excess weapons in the theater of operations and payback of ordnance to other services (if required). This plan should include a proposal to replenish war reserve stocks of ashore and afloat units involved in the conflict and take into account requirements for Atlantic and Pacific-based ship deployment schedules in accordance with GNOPP rules. Once approved by CNO (N411) and CMC (ASL), the reset plan will be presented to CNO (N3/N5) and CMC (PP&O) for approval. Following approval, NAVSUP GLS AMMO CRC will ensure expeditious redistribution of available assets to meet global requirements.

```
R 123456Z MONTH 00
FM CNO WASHINGTON DC//N411//
TO COMLANTFLT NORFOLK VA//N411/N411A//
COMPACFLT PEARL HARBOR HI//N42/N421//
COMUSNAVEUR LONDON UK//N411//
COMMARCORSYSCOM QUANTICO VA//AM//
COMMARFORLANT//ALD//
COMMARFORPAC//ALD//
CTF SEVEN THREE
CTF FIVE THREE
CTF SIX THREE
COMLOGWESTPAC
COMSERVFORSIXTHFLT//AMMOEUR//
COMLOGFORNAVCENT
CDRIOC ROCK ISLAND IL//AMSIO-SMA/NVLNO//
NAVAMMOLOGCEN MECHANICSBURG PA//00/09/01/30/50/60//
NAVAMMOLOGCEN INDIAN HEAD MD/09A//
NAVAMMOLOGCEN AMMOPAC SAN DIEGO CA//003//
NAVAMMOLOGCEN AMMOLANT NORFOLK VA//003//
INFO CMC WASHINGTON DC//ASL-30//
COMUSNAVCENT BAHRAIN //N411//
COMSECONDFLT
COMTHIRDFLT
COMFIFTHFLT
COMSIXTHFLT
COMSEVENTHFLT
COMNAVSUPSYSCOM MECHANICSBURG PA//00//
NAVORDSAFSECACT INDIAN HEAD MD
MILSEALIFTCOM//PM1//
USTRANSCOM
SPECWARCOM
COMDT COGARD WASHINTON DC//G-OCU/G//
CLASSIFICATION//N03060//
MSGID/GENADMIN/OPNAV N411/MONTH/SER//
SUBJ/STANDUP OF CRISIS RESPONSE CENTER (CRC) AND AMPLIFYING GUIDANCE FOR CLASS V
AMMUNITION MANAGEMENT AND ACCOUNTING//
REF/A/RMG/CJCS/(DTG)/S//
REF/B/DOC/NAVAMMOLOGCEN/NAVSUP-P-724/DATE//
REF/C/DOC/CNO/OPNAV M-8000.16  NOMP//
REF/D/DOC/NAVSEA/OP5 7TH REV/DATE//
REF/E/DOC/NAVSEA/NAVSUP P-805/DATE//
REF/F/DOC/NAVSEA/NAVSUP P-807/DATE//
(OTHER REFERENCES AS MAY BE APPLICABLE.)
NARR/REF A PROVIDES OPERATIONAL GUIDANCE WRT SUPPORTED COM AND SUPPORTING COMS. REF B
PROVIDES PROCEDURES FOR REPORTING CLASS V (A) AMMUNITION TRANSACTIONS. REF C PROVIDES
POLICY AND GUIDANCE FOR BOTH SUPPORTED AND SUPPORTING NAVAL COMMANDS ACTIVITIES. REF D
PROVIDES GUIDANCE FOR TRANSPORTATION AND STORAGE OF AMMUNITION ASHORE. REF E IDENTIFIES
PROCEDURES FOR RECEIPT, SEGREGATION, STORAGE AND ISSUE OF AMMUNITION AT SHORE FACILITIES.
REF F PROVIDES PROCEDURES FOR RECEIPT, SEGREGATION, STORAGE AND ISSUE FOR AFLOAT AND
SECONDARY UNITS.//
```

Figure E-1. Sample Draft Message Template for Standup of Crisis Response Cell

RMKS/1. (CLASSIFICATION) PURPOSE: THIS MESSAGE DIRECTS STANDUP OF A CRISIS RESPONSE CENTER(CRC) AT THE NAVAL OPERATIONAL LOGISTICS SUPPORT CENTER AMMUNITION MECHANICSBURG, PA, TO SUPPORT THE NAVY COMPONENT COMMAND (NCC), AND SUPPORTED MARINE FORCES COMPONENT COMMAND (MFCC) IN PROVIDING ORDNANCE TO CONDUCT OPERATION XXXXXX.
THE CRC WILL OPERATE UNDER THE DIRECT OPERATIONAL CONTROL OF OPNAV N411 AND WILL PROVIDE REPORTS AS NECESSARY VIA NAVAL MESSAGE/SECURE EMAIL REGARDING THE STATUS OF URGENTLY REQUIRED MATERIAL. THIS HAS BEEN COORDINATED WITH HQMC (ASL-30), CUSFFC (N41), COMPACFLT (N42), COMUSNAVEUR (N41), COMMARFORCOM (ALD), AND COMMARFORPAC (ALD).
2. (U/C/S) SUMMARY: AS DIRECTED BY REF A, THE SUPPORTED COM IS (AS ASSIGNED) WITH COMMANDER, JOINT FORCES COMMAND, COMMANDER, PACOM AND COMMANDER, USTRANSCOM AS SUPPORTING COMS. ADDITIONALLY, MILITARY SERVICES AND OTHER DOD AGENCIES WILL RENDER ASSISTANCE AS MAY BE REQUIRED. REF A ALSO PROVIDES THE FOLLOWING INFORMATION RELATIVE TO LOGISTICS:
A. PROJECT CODE/ (AS ASSIGNED)
B. FUNDING RESPONSIBILITY/ (AS ASSIGNED)
C. THE FOLLOWING APPLIES:
(1) SUPPORTED NCC/
(2) SUPPORTED MFCC/
(3) SUPPORTED LOGISTICS AGENT/
(4) ALL OTHERS NOT MENTIONED ABOVE ARE CONSIDERED TO HAVE SUPPORTING ROLES AND RESPONSIBILITIES TO ENSURE REQUIREMENTS ARE FILLED IN AN EFFICIENT AND COST EFFECTIVE MANNER.
3. (U/C/S) SITUATION. US NAVAL FORCES ARE TO PARTICIPATE IN OPERATION _____ IN CONCERT WITH (OBTAIN DETAILED LANGUAGE FROM EITHER CJCS OR SUPPORTED COM MESSAGE PERTAINING TO THE OPERATION/EXERCISE.)
4. (U/C/S) MISSION. WHEN DIRECTED, NAVAL FORCES WILL CONDUCT MILITARY OPERATIONS AIMED AT FACILITATING THE ACHIEVEMENT OF THE DESIRED POLITICAL/MILITARY (MIL/POL) END STATE (OBTAIN FROM EITHER CJCS OR SUPPORTED COM MESSAGE REGARDING THE OPERATION/EXERCISE).
5. (U/C/S) EXECUTION. UPON NOTIFICATION, NAVAL FORCES WILL LAUNCH STRIKE OPERATIONS ISO (OPERATION/EXERCISE). IDENTIFICATION OF ORDNANCE REQUIREMENTS FOR PROSECUTING INITIAL STRIKE PACKAGES AND FOLLOW ON FORCE SUSTAINMENT ARE THE RESPONSIBILITY OF THE SUPPORTED COM VIA THE ASSIGNED NCC AND MFCC.
6. (U/C/S) ORDNANCE SOURCING POLICY: SUPPORTING COMS ARE REQUIRED TO IREDREQUIRED TO MAINTAIN STOCKS FOR OTHER CURRENT AND FUTURE OPERATIONS. UNTIL OTHERWISE DIRECTED, SOURCING POLICY AND GUIDANCE IS DEFINED AS FOLLOWS: (DETAILED SOURCING POLICY AND GUIDANCE WILL BE DEVELOPED BY CNO/CMC BASED ON PREVAILING POLITICAL/THREAT CONDITIONS EXISTING WHEN THE CRISIS OCCURS AND SPECIFIED IN THIS PARAGRAPH IN A FORMAT SIMILAR TO THIS SAMPLE)
(1) COMUSFLTFORCOM: 2 CVBG SHIPFILLS PLUS 2 ARG SHIPFILLS NOT INCLUDING UNITS CURRENTLY DEPLOYED (LIST)
(2) COMPACFLT: XXXXXXXXXXXXXX
(3) COMCUSNAVEUR: XXXXXXXXXXXXX
(4) COMARFORCOM: XXXXXXXXXXXX
(5) COMARFORPAC: XXXXXXXXXXXXX
(6) MPF SHIPS:
(7) TREATY STOCKS IN PLACE IN NORWAY, KOREA, ETC.
7. (U/C/S) ADMINISTRATION. THE CRC WILL NOTIFY ALCON WHEN FULLY OPERATIONAL BY NAVAL MESSAGE AND PROVIDE AMPLIFYING INFORMATION TO DELINEATE ROLES AND RESPONSIBILITIES FOR RESPONSIVE PROCESSING AND INTENSIVE MANAGEMENT OF ORDNANCE REQUISITIONS, MATERIAL SOURCING AND DELIVERY STATUS.//

Figure E-1. Sample Draft Message Template for Standup of Crisis Response Cell - contd.

E7 Summary of Actions and Responsibilities.

a. CNO and CMC Headquarters Staffs.

(1) Provide ordnance logistics guidance and policy to Navy Fleet COMS and MARFORs in support of the respective Unified COMS during the deliberate planning process. (N4) (DC, AVN).

(2) Coordinate with Navy Fleet COMS, MARFORs and other major claimants to obtain accurate input to the NNOR and ensure TTRs are submitted. (N81) (ASL, APW).

(3) Pass TTR inputs to NAVSUP GLS AMMO and resource sponsors for development of the CNO and CMC-approved Non-Combat Expenditure Allocation (NCEA). (N81) (ASL) (Resource Sponsors).

(4) Annually approve and promulgate NCEA to the Fleet COMS, including MARFORs and other major claimants for further distribution to the Naval forces. (N411) (ASL, APW).

(5) Resolve Class V material shortfalls identified during the deliberate planning process. (N411) (ASL).

(6) In the event of crisis, standup the CRC and publish the LOI. (N411).

b. Fleet COMS and MARFORs (Commander, United States Naval Forces Central Command, where applicable).

(1) Participate in annual GNOPP/RBLP update conferences to:

(a) Coordinate within the GNOPP/RBLP charter and with NAVSUP GLS AMMO to develop positioning actions to meet OPLAN requirements, minimize risks associated with ordnance shortfalls and facilitate TPFDD execution.

(b) Develop or revise as necessary, business rules for the GNOPP/RBLP based on precise planning factors including: shipfill/beddown; OPLAN and training requirements; storage activities and capacity; and re-supply lead-times.

(c) Resolve deliberate planning, crisis action planning, positioning plan development, load planning and ordnance positioning strategy issues. If unable to do so, address problem areas to CNO/CMC for resolution.

(2) Obtain validated OPLAN ordnance requirements from the respective service components. Coordinate with service components and NAVSUP GLS AMMO regarding naval ammunition sourcing, identification of shortfalls and completion of the TPFDD during the deliberate planning process.

(3) Conduct periodic assessments of Combatant Command's (COCOM) requirements in support of MCO, SSC and MOOTW.

(4) Coordinate with NAVSUP GLS AMMO when attempting to satisfy Class V naval ammunition shortfalls that can not be filled from assets held at primary or secondary naval stock points within the Area Of Responsibility (AOR).

(5) Submit to the Director, NAVSUP GLS AMMO:

(a) Proposed changes to 30,000 series allowance lists for shipfill, mission loads and cargo loads based on CNO/CMC approved combat requirements via Commander, Naval Surface Forces (COMNAVSURFOR), COMUSFLTFORCOM and COMUSPACFLT with a copy to CNO (N815) and CMC (ASL).

(b) Inputs (revisions to business rules/planning factors) for the GNOPP/RBLP via COMUSFLTFORCOM in support of COCOM OPLANs/CONPLANs and other contingency requirements. Submit copies to NAVSUP GLS AMMO via CNO (N411) and CMC (ASL).

(6) Develop tailored allowance lists from which afloat activities will submit requisitions to meet COCOMs requirements.

(7) Submit training requirement component of the TTR to CNO (N81) by 1 June (FY+1) each year for development of the NCEA.

(8) Manage load plans for all storage activities in respective AOR and coordinate replenishment/redistribution required to correct load plan deficiencies (shortages/excess) with NAVSUP GLS AMMO.

(9) Optimize employment of Opportune Lift (OPLIFT) as necessary to effect positioning/load plan compliance and to support Class V material rollback.

c. NAVSUP GLS AMMO.

(1) Develop, update and manage the GNOPP/RBLP model utilizing inputs from Fleet COMS, MARFORS and the Commander, Marine Corps Systems Command (COMMARCORSYSCOM) (PMM204) for U.S. Marine Corps (USMC) ground ammunition. The plan shall be updated annually when changes are identified via positioning conferences and the GNOPP/RBLP Memorandum of Agreement (MOA).

(2) Compute and publish load plans for all naval ammunition storage activities.

(3) Schedule and coordinate annual GNOPP/RBLP Update Conferences.

(4) Publish and issue shipfill, mission and cargo load allowance lists.

(5) Coordinate and assist Fleet COMS and MARFORs in developing 30,000 series allowance lists.

(6) Coordinate development of ordnance distribution plans based on GNOPP/RBLP positioning with Fleet COMS and MARFORs. Identify ordnance positioned in support of GNOPP/RBLP by specific mission and priority.

(7) Develop metrics to measure ordnance distribution compliance relative to the GNOPP/RBLP allocation and magazine utilization. Incorporate metrics into the NAVSUP GLS AMMO Ordnance Assessment Portfolio (OAP).

(8) Incorporate ordnance inventory readiness metrics into the NAVSUP GLS AMMO OAP based on standardized readiness definitions and assumptions provided by the Fleet COMS and MARFORs and coordinated/reviewed by the NOD.

(9) Assist Fleet COMS and MARFORs in the management of load plans by coordinating the ordnance replenishment and redistribution.

(10) Act as Department of the Navy single point of contact for coordination with the Joint Munitions Transportation Coordinating Agency (JMTCA) for the Single Manager for Conventional Ammunition (SMCA) and non-SMCA common-user ammunition movement requirements other than Class V (W) ground ammunition. Provide data required to complete deliberate planning, crisis action planning used to facilitate United States Transportation Command (USTRANSCOM) feasibility analysis.

(11) Coordinate sourcing for SMCA-held assets.

(12) Advise CNO (N411) and MARCORSYSCOM (PMM204) of changes or impending changes in ashore ordnance storage capacities.

(13) Provide new production and rework schedules and allocation summaries to Fleet COMS and MARFORs. Provide a copy to CNO (N411) and CMC (ASL).

(14) Ensure ordnance automated management systems are kept current with industry technology standards and are able to accommodate changes in a timely manner.

(15) When directed, stand up a CRC to enable timely sourcing, distribution and accurate expenditure reporting of naval ordnance.

d. Program Manager/Acquisition Agents.

(1) Provide testing requirement (e.g., flight clearance, quality assurance, quality surveillance) component of the TTR to CNO (N81) and CMC (ASL) by 1 June (FY+1).

(2) Provide new production and rework delivery schedules to NAVSUP GLS AMMO with timely updates to reflect changes.

e. COMMARCORSYSCOM (PMM204), COMNAVSPECWARCOM and Commandant of the U.S. Coast Guard establish and provide ammunition storage requirements to the respective Navy Munitions Command and NAVSUP GLS AMMO for inclusion in GNOPP/RBLP designated activity load plans.

E8 Reports.

a. NAVSUP GLS AMMO Joint Munitions Laydown Report (JMLR) for combat useable assets to CNO (N411) monthly.

b. NAVSUP GLS AMMO Global Munitions Report (MUREP) to CNO (N411) weekly.

c. The reporting requirements contained in this appendix are exempt from reports control per SECNAVINST M5214.1.

APPENDIX F

Conventional Ordnance Inventory Accountability

APPENDIX F

Conventional Ordnance Inventory Accountability

Table of Contents

Paragraph	Subject	Page
F1	Purpose	F-1
F2	Scope and Applicability	F-1
F3	Background	F-1
F4	Objectives	F-1
F5	Policy	F-2
F6	Physical Inventory/Sampling Requirements	F-5
F7	Inventory Accuracy Standards	F-7
F8	Actions and Responsibilities	F-7

List of Illustrations

Figure	Title	Page
F-1	Record-to-Record Relationship Between OIS-W and OIS-R/ROLMS and the OIS-R/ROLMS Record-to-Magazine	F-3
F-2	Inventory Accuracy Standards	F-8

APPENDIX F

Conventional Ordnance Inventory Accountability

F1 Purpose. This appendix provides policy for the accountability and inventory accuracy of conventional ordnance to include the following:

a. To issue policy regarding the accountability for conventional ordnance inventory.

b. To assign responsibilities for achieving and sustaining ordnance inventory accuracy.

c. To establish ordnance Inventory Accuracy (IA) and Inventory Effectiveness (IE) performance objectives.

d. To implement the provisions in Department of Defense (DOD) 4000.25-2-M and the requirements of references OPNAVINST 5530.13C, OPNAVINST 8020.14/MCO 8020.11, DOD Regulation 4140.1-R, Naval Ordnance Safety and Security Activity Instruction (NAVORDSAF-SECACTINST) 8020.14, and NAVSUP P-724.

F2 Scope and Applicability.

a. Material Inclusions. This appendix applies to material in any condition held in naval inventory records or in contracted custody, and classified as explosive ordnance, inert ordnance and ordnance containers/packaging items designated as reusable. This appendix does not apply to nuclear weapons, ballistic missiles, or biological and chemical weapons.

b. Command and Activities. This appendix applies to all naval activities that store conventional ordnance, including sonobuoys and Marine Corps Class V aviation ordnance. All government and contractor personnel involved in naval ordnance production, life cycle and operational logistics support, and information systems management are included in this manual. This appendix is applicable to all activities reporting naval ammunition into the Ordnance Information System (OIS). All Claimants/Commands, Type Commander, and Regional Commanders with subordinate commands and activities that handle or store Naval ordnance are also included within the scope of this appendix for purposes of inventory accuracy oversight, corrective action and training. Shore activities with large customer bases, high volume and/or large amounts of stock under management are designated as primary stock points with special inventory requirements as stated within this appendix.

F3 Background. The integrity of the Navy stockpile and the accuracy of the inventory records are the basis for ordnance positioning, Fleet support, readiness assessment, requirements determination and ordnance acquisition programs. Effective ordnance inventory management is critical to mission success and personnel safety.

F4 Objectives.

a. Strengthen ordnance accountability by improving IA, IE, asset visibility and the supporting inventory management processes.

b. Define IA, IE and inventory management standards.

c. Focus command attention on ordnance inventory management and stewardship as a primary element of successful mission accomplishment.

d. Describe the Navy's inventory management strategy which calls for a number of inventory taking approaches to be used in combination at each activity. Certain inventory taking approaches will be mandatory for all activities while others will be prescribed based on the types of ordnance material stored at an activity, the size and transaction volume at an activity or the activity's inventory management performance. NAVSUP P-724 provides details for implementing and executing the Navy's ordnance inventory management strategy.

F5 Policy.

a. Ordnance inventory accuracy and effectiveness is a Chief of Naval Operations (CNO) special interest item. An Ordnance Inventory Accountability Program based on the guidance in DOD 4000.25-2-M, OPNAVINST 5530.13C and described in detail in NAVSUP P-724 and this appendix shall be established and monitored by each command/claimant whose subordinate activities hold ordnance. Activity or unit performance measured against ordnance IA or IE standards set forth in paragraph F8, will be specifically and separately identified in the formal results of command audits, Explosives Safety Inspections (ESIs) and external inventory accountability reviews.

b. Ordnance Information System - Wholesale (OIS-W) is the total item property record within the Navy. OIS-W provides the complete range of data supporting requirements determination, ordnance acquisition logistics and operational logistics. This record is accessible and shared by all users of ordnance logistics data. Inventory management policy described herein is intended to ensure the real time accuracy of OIS-W. All Naval activities are required to use either the Ordnance Information System - Retail (OIS-R) or the Retail Ordnance Logistics Management System (OIS-R/ROLMS) to report to OIS-W.

c. Security is the first line of defense for physical inventory control and accountability. All activities and units included in the scope of this appendix will comply with the physical security standards as set forth in OPNAVINST 5530.13C.

d. The Commanding Officer (CO)/Officer-in-Charge (OIC) is responsible for and shall ensure that ordnance inventory recordkeeping, accountability control, reconciliation and reports that update OIS-W are promptly and accurately recorded. These functions are critical for successful mission planning and accomplishment. OIS-R/ROLMS is the official stock record and will reflect activity/unit level accountability. Figure F-1 depicts the record-to-record relationship between OIS-W and OIS-R/ROLMS and the OIS-R/ROLMS record-to-magazine relationship at the unit level.

e. Inventory accountability is the fundamental responsibility of a command. Accordingly, staffing and funding for Inventory Accountability Program functions shall be the responsibility of individual commands/claimants. Commanders of individual activities shall remain cognizant of their inventory status by requiring periodic reports and personal inspection as appropriate. NAVSUP P-724 provides inventory sample monthly report which can be used for the purpose or modified to suit individual circumstances. Any report, however, should be written, retained for three years, and contain the below listed minimal information.

(1) Whether any inventories were required and their results.

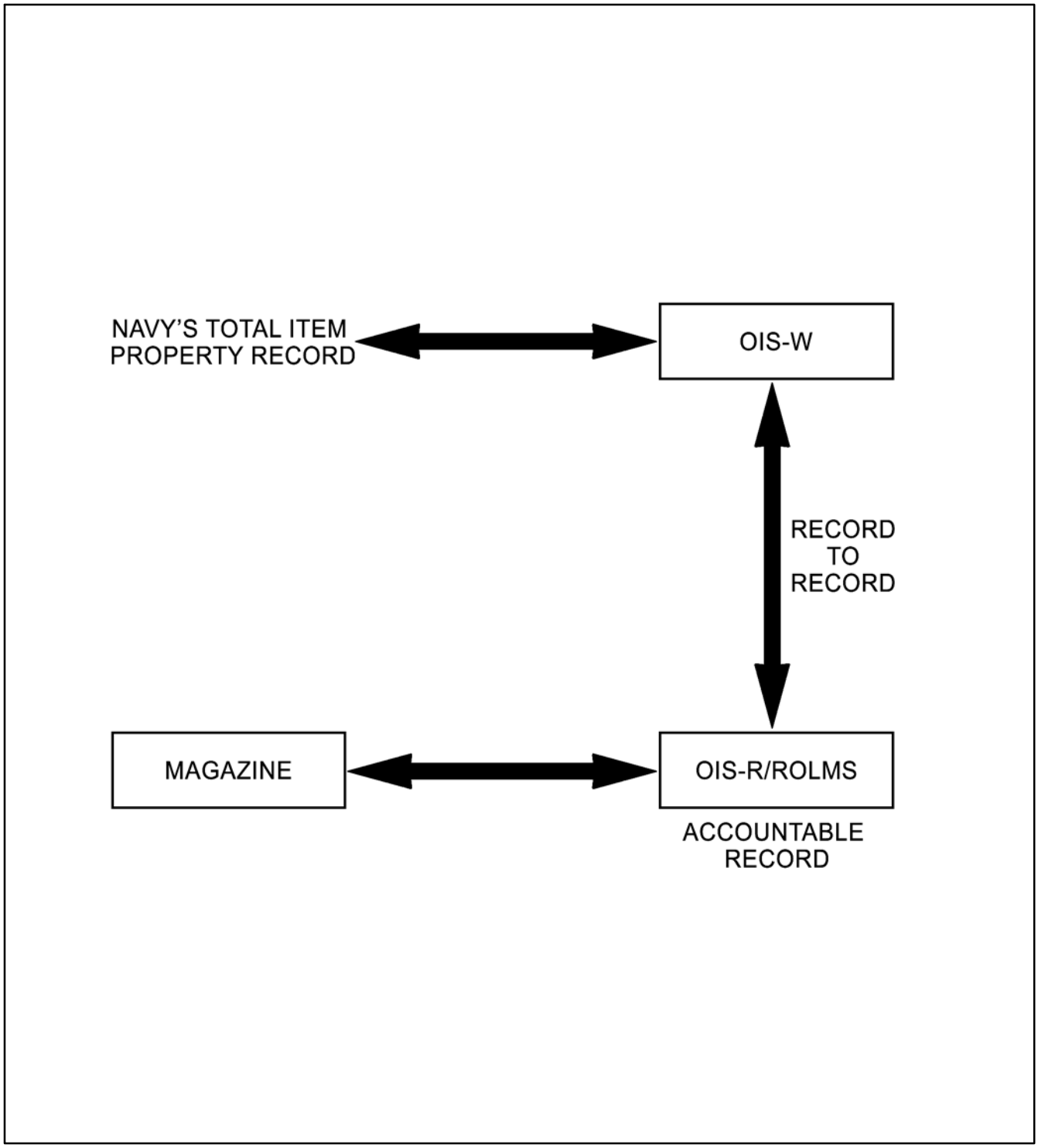

Figure F-1. Record-to-Record Relationship Between OIS-W and OIS-R/ROLMS and the OIS-R/ROLMS Record-to-Magazine

(2) Gains and losses by inventory.

(3) Items undergoing reconciliation and causative research and the status of the investigations.

(4) In-transits-material shipped but no activity on file.

(5) Out-of-Balance Records - Quantity mismatches of local records with OIS-W database.

(6) Periodic Lot Report submission status (ROLMS users).

(7) Status of missing/suspended Ammunition Transaction Reports (ATRs) (ROLMS users).

(8) Notices of Ammunition Reclassification (NARs) received, their applicability, and whether recorded condition codes have been updated.

(9) Last connectivity to OIS-W database (OIS-R users).

f. One of the primary factors negatively impacting ordnance inventory accountability/accuracy is tracking ordnance while in transit. Ordnance that has been shipped is reported in an "in transit" status until the receiving activity submits a receipt ATR or Transaction Item Report (TIR). This is true whether the shipment is an inland depot or the ammunition ship alongside during underway replenishment. The true status and location of the in-transit ordnance is not readily accessible. "In-transits", as they are called, affect a significant percentage of our most critical ordnance during Strike group uploads and downloads and can disable efforts to respond to a contingency deployment. Accordingly, special management attention and discipline is required to ensure that in-transit ordnance is closely monitored and controlled. The following custody and responsibility policies are invoked for in-transit ordnance and apply to all naval activities receiving/storing and/or shipping ammunition:

(1) Ordnance in-transit is accountable to shipping activity/unit until confirmation of receipt by consignee (receiving activity).

(2) Unmatched issue or disputed receipt transactions will be reconciled from in-transit status within:

(a) For in-transits between two Continental United States (CONUS) activities: 10-days.

(b) For in-transit between CONUS and an Outside the Continental United States (OCONUS) or between two OCONUS activities: 90 days.

(3) Receipts, issues, and status changes mandate document posting and processing into OIS-R/ROLMS. OIS-R/ROLMS will update the OIS-W database through a TIR (OIS-R/ROLMS full-level users only) or ATR. TIRs/ATRs are required to be submitted within the following time frames:

(a) All transactions involving High Risk Categories I and II (CAT I and CAT II): 24 hours/1 working day.

(b) Major ammunition load/offloads or at sea evolutions by ammunition ships, large deck amphibious ships (i.e., AE, TAE, AOE, LHA and LHD) and aircraft carriers shall be reported within 72 hours of the respective evolution.

(c) All other transactions: 48 hours/2 working days.

g. ESIs required by NAVORDSAFSECACTINST 8020.14 will include an Inventory Management Critical Program identified as a pillar. An IA and IE Assessment will be a critical element of the pillar at primary stock points.

h. IA and IE deficiencies identified via a monthly checklist, an ESI finding, station sampling or inventory results, shall require Claimant/CO to determine if an Ammunition Management and Accountability Review (AMAR) or other remedial action requiring off-station assistance is required.

i. The Navy Inspector General and Director, Naval Audit Service may include ordnance inventory accountability reviews in their scheduled command inspections and/or audits.

j. All subordinate directives concerned with ordnance inventory accountability procedures must comply with this appendix.

F6 Physical Inventory/Sampling Requirements.

a. Scheduled Inventories. All OIS-W reporters shall prepare and maintain a local record of all physical inventories scheduled at the beginning of each fiscal year. Additionally, all activities shall conduct scheduled physical inventories on all items for which they are accountable as specified below. U.S. Coast Guard (USCG) units will follow inventory requirements in accordance with paragraph F1d. For automated users, these inventories shall be entered into OIS-R/ROLMS to update the Date of Last Inventory (DOLI) within the database and to facilitate resolution of pre-adjustment and causative research issues. All inventory management and sampling program details are described in NAVSUP P-724.

(1) Semi-Annual Inventories. All activities storing Category I ordnance (Controlled Inventory Item Codes (CIICs) 1, 5 and 61) will conduct a 100 percent physical inventory of those items semi-annually.

(2) Annual Inventories.

(a) All activities storing Category II ordnance (CIICs 2, 8, and S) will conduct a 100 percent physical inventory of those items annually.

(b) All activities storing Depleted Uranium (DU) rounds will conduct a 100 percent physical inventory of those items annually.

(c) All activities storing any other ordnance material (moderate/low-risk) will conduct either an Annual Random Sample or a 100 percent physical inventory annually. Use of the Annual Random Sample is encouraged when done in accordance with reference NAVSUP P-724. The results are statistically valid and can be obtained with less effort.

b. Unscheduled Inventories. Unscheduled inventories are required by all activities when any of the following occur:

(1) Warehouse Denial (Refusal). When material is on record but is not found in the indicated location during material movements (i.e., issuing material), a complete inventory for that specific material will be conducted at all locations where records indicate the material is stored.

(2) Bounce Back. When a stock point rejects a requisition referred by Naval Supply Systems Command Global Logistics Support (NAVSUP GLS AMMO) and transaction history analysis does not resolve the discrepancy, a complete inventory for that specific material will be conducted at all locations where records indicate the material is stored.

(3) Compromised Magazine. Anytime a location or magazine is compromised, a 100 percent physical inventory for the compromised location will be completed within 24 hours. A location/magazine is considered compromised anytime there is evidence of, or substantial opportunity for, an unauthorized entry (e.g., magazine left unlocked and unattended).

(4) Change in Accountable Officer or Change of Command. In the event of a change in accountable officer or change in command, all activities will conduct a physical inventory as described in paragraphs F6a(1) and F6a(2)(a), above, regardless of the length of time since the most recent inventory(s).

(5) Special Inventories. Whenever an activity detects adverse IA/IE conditions (i.e., not meeting the minimum performance standards described in paragraph F8, below), targeted inventories may be required. These investigative inventories seek to fully understand the scope and cause of any process failures and to ensure accountable records are corrected for ordnance items that were negatively impacted. The activity Inventory Accuracy Officer (IAO) should coordinate inventory monitoring and subsequent investigation and use of special inventories. The NAVSUP GLS AMMO IAO can also be consulted to assist in developing an investigative approach that uses Special Inventories.

c. Statistical Process Control (SPC) Monthly Sampling. The NAVSUP GLS AMMO IAO will specifically designate SPC Monthly Sampling activities each year. Only those activities specifically designated are required to perform SPC Monthly Sampling and these activities will receive special training on the implementation of SPC Monthly Sampling and reporting. Non-designated activities that believe they may benefit by using SPC Monthly Sampling to monitor and improve their processes should contact the NAVSUP GLS AMMO IAO to receive the necessary training to use SPC Monthly Sampling effectively. SPC Monthly Sampling activities will still perform all of the required inventories specified in paragraphs F6a(1) and F6a(2), above, except that the requirement to perform an Annual Random Sample may be waived depending on IA/IE performance history. The SPC Monthly Sampling program details are described in NAVSUP P-724.

d. Location Survey. A location survey must be conducted once per fiscal year by all Naval activities storing ordnance and can be conducted concurrently with other physical inventories or processes that require entry into magazines or storage locations to the maximum extent practicable. Details for conducting a Location Survey program are described in NAVSUP P-724.

e. Location Reconciliation. This is an annual reconciliation performed by all OIS-R/ROLMS activities and is required to ensure that the local OIS-R/ROLMS record matches the master OIS-W database. Details for conducting Location Reconciliations are described in NAVSUP P-724. Location Reconciliations will be conducted by all activities under the following conditions:

(1) Annually. Designated SPC Monthly Sampling activities will perform their annual Location Reconciliation according to a schedule provided by the NAVSUP GLS AMMO IAO. All other activities will submit their Location Reconciliation annually.

(2) All activities will perform an asset/NIIN specific Location Reconciliation upon notification by NAVSUP GLS AMMO of an Out-Of-Balance (OOB) transaction.

(3) All activities will perform a complete Location Reconciliation whenever OOB records exceed the established standard of <0.5% as a percentage of total records (number of OOB records divided by the total activity records (obtained from OIS-W)).

f. OPNAVINST 3100.6J and DOD 4000.25-2-M provide guidance for reporting Navy-owned ordnance that cannot be accounted for. Prior to reporting missing, lost, stolen, or recovered ordnance, the activity shall make every effort to verify inventory stock records to ensure asset counts are both accurate and complete.

F7 Inventory Accuracy Standards.

a. Standards. The minimum standards shown in Figure F-2 are established based on security risk.

b. Standards Flexibility. Currently inventory management standards are assigned based on security risk group assigned to each ordnance item. The minimum standards for Moderate Risk and Low Risk are identical but are displayed separately because OIS-R/ROLMS is currently programmed to only be able to establish inventory samples by security risk group. In the future, the flexibility to assess ordnance inventory management by other risk factors such as operational risk, financial risk and transaction volume/frequency of handling risk will be incorporated as the Navy's inventory management and supporting Automated identification Technology (AIT) strategy evolves.

F8 Actions and Responsibilities.

a. CNO (N41) will:

(1) Establish ordnance accountability policy, objectives, and standards, including periodic updating of this manual.

(2) Serve as resource and functional sponsor for ordnance accountability functions and activities.

(3) Review Navy-wide ordnance inventory accountability performance trends.

b. Commander, Naval Supply Systems Command (COMNAVSUPSYSCOM). COMNAVSUPSYSCOM shall assist CNO (N41) in monitoring and reporting Inventory Accuracy and Inventory Effectiveness statistics and trends.

(1) Develop and issue ordnance accountability procedures for naval cognizance material as prescribed in DOD 4000.25-2-M.

(2) Include Accountability Program resource requirements in headquarters/field organization annual Program Objective Memorandum (POM) budget submissions.

(3) Define requirements and coordinate development of Automated Information Systems (AIS) and AIT hardware, database, and applications to support ordnance inventory accountability. Develop and coordinate maintenance support for all ordnance inventory management related AIS, AIT, and software packages.

(4) Conduct periodic Inventory Management Forums to discuss ordnance accountability related matters for major claimants/commands and interested activities.

Risk Group		IA	IE	Custodial	Location Survey	Location Reconciliation
I	HIGH RISK CIICs: 1, 2, 5, 6, 8, S	100%	85%	100%	98%	99.5%
II	MODERATE RISK CIICs: 3, 4, 9, A, B, C, D, P, 7, U ~ all explosives not in High Risk group	95%	85%	95%	98%	99.5%
III	LOW RISK CIICs: J, 7, U, Blank ~ all inert other than C or S	95%	85%	95%	98%	99.5%

Figure F-2. Inventory Accuracy Standards

(5) Coordinate with Commander, Naval Education and Training Command (NETC) to develop and implement formal Ordnance Accountability and Inventory Management Training for proficiency certification of officer, enlisted, and civilian personnel within the naval ordnance community.

(6) Monitor ordnance-related course materials/curricula for currency and adequacy of subject matter taught and course materials provided to ensure continued applicability and accuracy.

(7) Coordinate with Chief of Naval Personnel (CNP) and the respective claimants to define training requirements for ordnance inventory accountability billets.

(8) Coordinate with the Single Manager for Conventional Ammunition (SMCA) and other service stock points where Navy-owned ordnance is positioned to ensure naval ordnance in SMCA/other service custody meets inventory accuracy requirements delineated in this manual.

(9) Conduct Ordnance Inventory Accountability Assessment in support of ESIs.

(10) Monitor and continually provide IA and IE statistics via the Ordnance Assessment Profile (OAP) for individual units/stations/claimants to include:

(a) Monitor compliance with physical inventory, random sampling, location audit, and location reconciliation scheduling and performance requirements.

(b) In-transits and reconciliation of aged unmatched issue and disputed receipt transactions.

(11) Develop, compile, and maintain a corporate information system to include naval ordnance accountability performance statistics for trend and comparative analysis of the primary and secondary stock points.

(12) Provide OIS-R/ROLMS and AIT training and support directly to Fleet units as coordinated with Fleet Commands and Marine Forces (MARFOR's).

(13) Schedule and conduct AMARs requested by Major Claimants, Type Commanders, Regional Commanders and Commanding Officers.

(14) Establish a list of primary ordnance stock points designated to perform SPC Monthly Sampling. Update the list annually.

(a) Command, Naval Sea Systems Command (COMNAVSEASYSCOM):

1. Incorporate random statistically valid IA and IE samplings as a component of the ESI Program.

2. Establish inventory management as a pillar of the ESI program.

3. With NAVSUP GLS AMMO input, schedule activities for random statistical IA/IE samplings to be conducted during their ESI.

(b) Commander Naval Education and Training Command (NETC):

1. In conjunction with COMNAVSUPSYSCOM, develop and provide training courses, curricula and training materials in support of ordnance inventory accountability related training requirements.

2. Include resource requirements to support Ordnance Inventory Accountability Training in CNET POM budget submissions.

3. Include Ordnance Inventory Accountability training in "A" and "C" schools for ordnance ratings.

4. Include ordnance Inventory Accountability subjects in advancement examinations for ordnance related ratings.

5. Include Ordnance Inventory Accountability Training in Prospective Commanding Officer/Prospective Executive Officer shore and sea pipeline training.

6. Include Ordnance Inventory Accountability Training in ordnance Officers Career Progression Courses.

c. CNP. Ensure ordnance inventory accountability training identified by COMNAVSUPSYSCOM is provided in inventory accountability billet pipelines and that training requirements and skills for these billets are identified to allow assignment of properly trained and experienced personnel.

d. Major Claimants/Commands:

(1) Establish and monitor inventory accountability programs within subordinate commands and issue implementing guidance to ensure compliance with key inventory accountability events and performance standards. Include at a minimum:

(a) Compliance with physical inventory, location audit, location reconciliation scheduling, and performance requirements.

(b) Reconciliation of aged unmatched issue and disputed receipt transactions.

(c) Timely and accurate transaction reporting, OIS-R/ROLMS and OIS-W OOB reconciliation, receipt and issue processing times, Periodic Lot Report (PLR), suspended ATRs and situation reports as may be required for missing munitions.

(2) Include ordnance inventory accuracy and accountability assessments as part of command inspection and internal review checklists.

(3) Include sufficient funding in POM budget submissions to support ordnance accountability objectives as an inherent part of the command's military mission.

(4) Ensure ordnance accountability and ordnance inventory accuracy performance indicators are identified as appropriate in officer fitness reports for subordinate COs/OIC of activities primarily involved in ordnance inventory management functions. (U.S. Navy only).

(5) Monitor station compliance with IAO assignments and responsibilities.

(6) Monitor OAP status and ensure remedial action is taken to ensure positive performance trends are maintained.

(7) Request AMARs, as required, to provide assessment, corrective action and remedial training to activities with substandard inventory accuracy performance.

e. COs and OICs.

(1) Shall establish and conduct an Internal Command Inventory Accuracy and Accountability Performance Monitoring Program. In doing so, they shall:

(a) Require and review reports per paragraph F5e.

(b) Monitor ordnance-related Navy training course participation.

(c) Monitor on-the-job training in basic skills and local procedures.

(2) Shall assign well-qualified and trained officers or equivalent grade level civilians to the IAO billet at primary stock points.

(3) Shall conduct local training programs and utilize formal training courses to ensure that local magazine custodians, recordkeepers, and managers have the proper skills and knowledge for maintaining local inventory accuracy and accountability of ordnance assets.

f. Acquisition/In-Service Managers:

(1) Include contractual provisions for 2D barcoding and vendor submissions of ATRs in all contracts for new production and/or repair of ordnance material.

(2) Ensure administrative contracting officers monitor the execution of vendor ATR submission requirements included in contracts.

(3) Provide listings of all current contracts involving ordnance production and repair, identifying those with contract provisions requiring vendor ATR submissions to NAVSUP GLS AMMO.

APPENDIX G

Conventional Ordnance Assessment And Maintenance Requirements Policy

APPENDIX G

Conventional Ordnance Assessment And Maintenance Requirements Policy

Table of Contents

Paragraph	Subject	Page
G1	Purpose	G-1
G2	Objectives	G-1
G3	Background	G-1
G4	Purpose	G-1
G5	Policy	G-1
G6	Responsibilities	G-3
G7	Ordnance Assessment Process	G-5
G8	Objective	G-5
G9	Scope	G-6
G10	Purpose	G-6
G11	Condition Based Maintenance (CBM)	G-6
G12	Ordnance Assessment (OA) Program	G-6
G13	Responsibilities	G-11
G14	Predictive and Analysis Models	G-15
G15	Documents	G-15
G16	Supporting Data Systems	G-32
G17	Reviews	G-37

List of Illustrations

Figure	Title	Page
G-1	Ordnance Assessment Program Structure	G-7
G-2	Ordnance Assessment Data Sources	G-8
G-3	Ordnance Assessment Cycle	G-11
G-4	Ordnance Assessment Analysis Process	G-12
G-5	Ordnance Assessment Program Plan (OAPP) Format	G-17
G-6	Ordnance Assessment Item Test Plan (OAITP) Format	G-21
G-7	Ordnance Assessment Item Test Report (OAITR) Format	G-26
G-8	Ordnance Assessment Annual Report (OAAR) Format	G-33

APPENDIX G

Conventional Ordnance Assessment And Maintenance Requirements Policy

G1 Purpose. Establish ordnance assessment and maintenance policy.

G2 Scope. This appendix pertains to all categories of Navy conventional ordnance inventory, including sonobuoys and Marine Corps Class V (A) aviation ordnance. This appendix applies to commands responsible for preparing Program Objective Memorandums (POM), Program Reviews (PR), and budget submissions for ordnance assessment, weapon systems support, and maintenance. Requirements of this appendix apply to programs with inservice operations assigned to government entities or to contractors.

G3 Objectives.

a. Provide policy for Ordnance Assessment (OA) and Maintenance programs.

b. Provide policy for conventional ordnance readiness programming, budgeting and execution.

c. Assign responsibilities.

G4 Background.

a. Quality Evaluation (QE) practices within the weapons Program Executive Officers/Program Managers (PEO/PM) and Systems Commands (SYSCOMS) are divergent and some QE practices are limited in scope to energetic components.

b. References SECNAVINST 5000.2C and the SECNAVINST 5400.15C assign PMs responsibility for total life-cycle management of conventional ordnance under their cognizance. In support of references SECNAVINST 5000.2C and SECNAVINST 5400.15C, life-cycle management, the surface warfare and underwater warfare weapons QE Operations & Maintenance, Navy (O&M,N) budget was realigned from a single QE line to each applicable PM's O&M,N Integrated Logistics Support (ILS) account during POM-08.

c. To facilitate standardization and uniformity of practice, the QE program was disestablished and replaced with the OA program. OA incorporates all aspects of existing Navy ordnance QE programs and applies to all-up-rounds and individual components and/or spares. Existing and draft documentation and plans with QE in their title need not be altered to reflect this change, but new and revised documentation should be appropriately titled "Ordnance Assessment (OA)."

G5 Policy.

a. Ordnance Assessment (OA)

(1) Each ordnance program shall implement and maintain a OA Program according to this instruction for the test, surveillance, and prediction of the effects of aging and environmental exposure on in-service conventional ordnance. This OA program shall use validated assessment and statistical principles to evaluate the safety, reliability and performance characteristics of all in-service conventional ordnance. This OA program shall be developed during the Research,

Development, Test and Evaluation (RDT&E) acquisition phase, used as an input to procurement documentation, and become a primary factor in determining in-service ILS (maintenance, Weapons Systems Support (WSS) , and OA) requirements. Managing, assessing, and scoring OA data and metrics shall be maintained under the Government's cognizance within government-owned and accessible databases, such as All Weapons Information System (AWlS) and other Government Functional Area Manager (FAM) approved systems.

(2) All-up-round or component safety, reliability, performance, and deployment criteria will be primary factors in determining program requirements. OA predictive and analytical models will be developed using the primary factors and the models will employ data obtained from OA test and evaluation activities. The model results will drive ILS requirements and engineering changes.

b. **Maintenance.**

(1) PMs preparing POM and budget submissions shall program to maintain serviceability levels not to exceed the most current constrained Non-Nuclear Ordnance Requirement (NNOR) output or projected inventory level, whichever is less. Items not normally included in the NNOR, such as some gun ammunition, shall develop their POM and budget submissions based on a documented baseline (e.g., ship-fill, combat consumption, training pipeline or component attrition/failure, Weapons System Planning Documents (WSPDs) or other related documents). Unserviceable weapons reported in the Ordnance Information System (OIS) or successor system(s) will be used as the beginning point of the programming baseline. During the execution year, any emergent unprogrammed maintenance actions in excess of the constrained NNOR levels or documented baseline will require a Director, Supply, Ordnance and Logistics Operations (OPNAV N41) approved exception.

(2) Programmed maintenance quantity requirements shall be consistent with OA modeled maintenance interval expirations plus fleet needs, deployment plans, and aviation ordnance captive carry policy.

(3) When ordnance items are removed from the NNOR and replaced with improved or advanced variants that cannot immediately meet requirements due to production lead times, then maintenance of legacy ordnance items shall be funded to meet constrained NNOR requirements.

c. Disposal decisions shall be justified on baseline quantity and condition criteria.

d. Failure data from fleet, maintenance, and OA testing, shall be entered into AWIS. A Failure Reporting and Corrective Action System (FRACAS) shall be utilized to capture, investigate and document failures and resultant corrective actions.

e. The primary implementing document for OA and Maintenance processes is the OPNAVINST 8000.16D Naval Ordnance Management Policy (NOMP). The primary data management system or systems shall be determined during the FAM deliberations; and, the primary budgeting system shall be the Optimized Performance Model (OPOM). Integration of all processes and databases will be a priority for PMs. Duplication of data systems will be eliminated. Alternate data management systems may be designated by the FAM.

G6 Responsibilities.

a. OPNAV N41 will:

(1) Assess the PEO/PM/SYSCOM OA, Maintenance, and WSS POM submission to ensure optimization of resources and compliance with this instruction.

(2) Attend and assess programs at semi-annual Weapons Readiness Reviews (WRR) with PEOs/PMs/SYSCOMs.

(3) Optimize OA, Maintenance, WSS, and the Quality Evaluation Technologies and Equipment (QETE) Program resources.

(4) Sponsor an R&D program as necessary to advance emergent OA processes with applicable and available technology with the goal of reducing the ordnance life-cycle costs.

b. PEOs/PMs and SYSCOMs as OA, Maintenance, and WSS managers will:

(1) Implement and maintain a formal OA program, and ensure use of best practices and optimized use of resources through collegial efforts with other PMs.

(2) Employ OPOM to determine optimal maintenance, WSS, and OA requirements.

(3) Coordinate and promulgate instructions, policies, procedures, and plans to implement this policy.

(4) Conduct and develop information to support semi-annual WRRs. At a minimum, the WRR information will include:

(a) Weapons Ready-For-Issue (RFI) compared to serviceable requirements,

(b) Outstanding safety issues,

(c) Assessment of the reliability and performance of weapons compared to Operational Availability (AO) criteria.

(d) Corrective maintenance actions, service life restrictions, and/or design changes that may increase reliability and/or performance to meet requirements,

(e) Profile of time since last all-up-round level test for the population and sub-populations, fleet fired items, and ground test items,

(f) Service life/Service In-Service Time (SIST),

(g) OA tests schedule,

(h) OA predicted shelf life,

(i) OA funding profile & requested profile.

(5) Provide OA ordnance/material requirements and maintenance rework and delivery schedules to Naval Supply Systems Command Global Logistics Support (NAVSUP GLS AMMO) to support maintenance requirements and optimal positioning actions.

(6) Provide Intermediate (I) and Depot (D) maintenance assignments to NAVSUP GLS AMMO for each repairable ordnance item as necessary.

(7) During the appropriate acquisition phases, the PM shall perform the following activities:

(a) Prior to Milestone B decision (or earliest program phase practicable):

1. Develop a Failure Modes and Effects Criticality Analysis (FMECA) for use as the primary tool for determining which components are Ordnance Assessment Items of Interest (OAII) and susceptible to aging.

2. Develop the Ordnance Assessment Program Plan (OAPP).

3. Develop the conceptual Item Test Plan (ITP) for each all-up-round and component subject to potential aging degradation.

4. Provide products of 7a(7) (b)l. through l., above, to the Weapon System Explosives Safety Review Board (WSESRB) process, reference OPNAVINST 8020.14/MCO P8020.11, in support of WSESRB deliberations.

(b) During Production: Capture and maintain access to all production data relevant to properties of the components and materials identified in the OAPP as OAII.

(c) During In-Service:

1. Perform engineering assessments of safety, reliability and performance characteristics of: the in-service inventory using analyses of firings, maintenance data, and inventory sample tests. Other test data and analysis may be included as necessary to provide the best assessment.

2. Identify trends in safety, reliability, and performance characteristics and predict the future condition of the stockpile, including expected service life and/or maintenance interval as appropriate to the system's maintenance strategy.

3. Use data from the OA program with a FRACAS to identify additional causative factors that affect the health of the stockpile or items in the stockpile-to-target sequence, including those originating from design, assembly, maintenance, handling, storage, deployment and interfaces with weapons and combat systems.

4. Use a formalized FRACAS to provide lessons learned feedback to production and weapons designers to preclude recurrence of problems.

5. Use technically valid, statistics based evaluations to report stockpile condition, affect stockpile management decisions, and justify resource requirements to OPNAV.

c. Naval Ordnance Safety and Security Activity's (NOSSA) Navy Ordnance Assessment Office (NOAO), as the Department of the Navy (DON)'s Technical Authority for OA, shall perform or direct the following functions:

(1) Provide assistance to PMs for OA activities, and aid in selection and implementation of scientifically based assessment techniques.

(2) In concert with PMs, develop OAPP's and documentation templates, assessment tools, processes and procedures.

(3) Promulgate best practices across programs, disseminate information on OA related issues, and provide coordination in all aspects of Navy OA across all Navy and Marine Corps Air weapons programs.

(4) Assist with OA aspects of the WRR and organize OA conferences and meetings as necessary to help integrate OA across all Navy and Marine Corps ordnance programs.

(5) Manage and execute life-cycle responsibilities, including all budgeting and execution functions, for the Navy and Marine Corps QETE to support all Navy and Marine Corps conventional ordnance OA efforts.

(6) Ensure OA technologies, equipment, and processes are fully compatible and integrated with the WSESRB and Navy and Marine Corps programs.

d. Naval Supply Systems Command, via the NAVSUP GLS AMMO will:

(1) Provide inventory management support and move unserviceable ordnance consistent with maintenance schedules.

(2) Publish a Master Repairables Item List (MRIL) to facilitate optimum Fleet turn-in/retrograde of unserviceable ordnance.

(3) Incorporate ordnance maintenance/production delivery projections into positioning plans and readiness metrics.

G7 Ordnance Assessment Process.

G7.1 Background. Ordnance degrades in safety, reliability, and performance characteristics over time due to changes in chemical and physical properties brought on by the stress of environmental factors and logistic actions during storage, transportation, and deployment. Although everything tends to experience degradation over time, ordnance poses special challenges due to its nature:

a. Many components contain complex chemical materials with extremely high amounts of stored chemical energy. These energetic materials may degrade into a hazardous condition and cause an unacceptably high safety risk.

b. Ordnance often contains complex electronics and mechanical components which are stored for years and transported in a wide range of environments until they are required to work with a high reliability rate.

c. Ordnance is almost always destroyed or unrecoverable in use, providing virtually no evidence of causes of failure. For many long-range systems, there may not even be any real-time indication to the system operator that they have failed.

d. The degradation of ordnance is not precisely understood and determining their status after they are placed in service may be difficult. They often cannot be effectively evaluated without disassembly and test at unique facilities using special processes.

e. An Ordnance Assessment (OA) program addresses these challenges by combining tests of ordnance in the stockpile with maintenance and operational data to evaluate critical characteristics to measure and predict the rate of degradation.

G8 Objective. Department of Defense (DOD) INST 5000.2 assigns Program Managers (PMs) responsibility for total lifecycle management of conventional ordnance under their cognizance. This appendix provides policy to Navy PMs for performing OA and maintenance programs, directing that all ordnance programs implement and maintain an OA Program for the test, surveillance, and prediction of the effects of aging and environmental exposure on in-service conventional ordnance. The OA program is required to perform a continuous, unbiased assessment of the Navy's in-service ordnance stockpile to measure and predict degradation of critical characteristics. This policy acts in concert with, and enables the use of, Reliability Centered Maintenance (RCM) and Condition-Based Maintenance (CBM) processes, as outlined in DOD Guide for Achieving Reliability, Availability, and Maintainability (RAM) and DODINST 4151.22. The OA program serves as the primary basis for PM actions to ensure ordnance safety is maintained and user requirements are met, providing confidence that these ordnance items are maintained in a state of readiness required by the user.

G9 Scope. This chapter applies to all items covered by the Naval Ordnance Management Policy (NOMP), including items not traditionally considered "Ordnance".

G10 Purpose. The purpose of this appendix is to provide guidance to ordnance programs for implementation of Navy policy derived from DODINST 5000.2, DOD Guide for Achieving RAM, and DODINST 4151.22 tailored for the special needs of ordnance systems. This guidance will aid in development and execution of a program which uses technically sound, data-driven, and statistically based evaluations and processes to make stockpile management decisions, determine subsequent resource requirements, and provide cost effective readiness.

G10.1 Reliability Centered Maintenance (RCM). RCM is a logical, structured process used to determine the optimal failure management strategies for any system based on system reliability characteristics and the intended operating context. RCM defines what must be done to a system to achieve the desired levels of safety, reliability, environmental soundness, and operational readiness, at best cost. RCM is to be applied continuously throughout the life cycle of any system.

G11 Condition Based Maintenance (CBM). OA is an enabling function for RCM and CBM, which is the preferred DOD methodology for determining maintenance requirements of systems. CBM is a maintenance strategy based on equipment operational experience derived from analysis. CBM includes maintenance processes and capabilities derived from real-time or approximate real-time assessments obtained from embedded sensors and/or external tests and measurements using either test equipment or actual inspection. This status provides the basis for maintenance and inventory management decisions based on the actual and derived future condition of those items. DODINST 4151.22 establishes the objective to develop a CBM Plus (CBM+) program by taking CBM practices and incorporating environmental or condition sensors and monitoring of degradation and degradation causative/contributory factors.

G12 Ordnance Assessment (OA) Program. OA is comprised of all activities that are necessary to assess and monitor the safety, reliability and performance of ordnance and weapon components, and statistically project the future characteristics. It monitors the status of the

weapon stockpiles to assure that ordnance, spare components, and associated support items are maintained in the state of readiness specified. An OA program should monitor all Key Performance Parameters (KPPs) and key system characteristics of the system as defined in DODINST 5000.2, with reliability a required metric.

Reliability is defined as the probability that a system or component will perform its required functions as designed under stated conditions for a specified period of time. In terms of ordnance, the specified period of time typically extends from the command to launch/fire to the desired time of impact/detonation/termination. Failure to perform in conditions outside the designed operating parameters of the weapon, such as the target being too fast, are counted as design limitations rather than reliability failures. Data for the program comes from several sources while in-service; operational and training use, maintenance operations, and deliberate surveillance testing of ordnance and components taken from the inventory. Additional data must also be available from the production phase, which is critical in establishing the baseline for parameters of interest. Figure G-1 illustrates the program structure for OA. Figure G-2 illustrates these primary data sources for OA,

The OA program is a combination of the program elements listed in paragraphs G12.1 through G12.2.3. The program shall use these elements to perform the following functions:

a. Planning and programming to prepare and execute the program.

b. Identify and evaluate factors (including interfaces with combat systems) affecting the current condition of the stockpile or the stockpile-to-target sequence, including factors originating from design, assembly, maintenance, handling, storage, and deployment.

c. Consider all of the environments, age distribution of subsystems and end items in the current inventory.

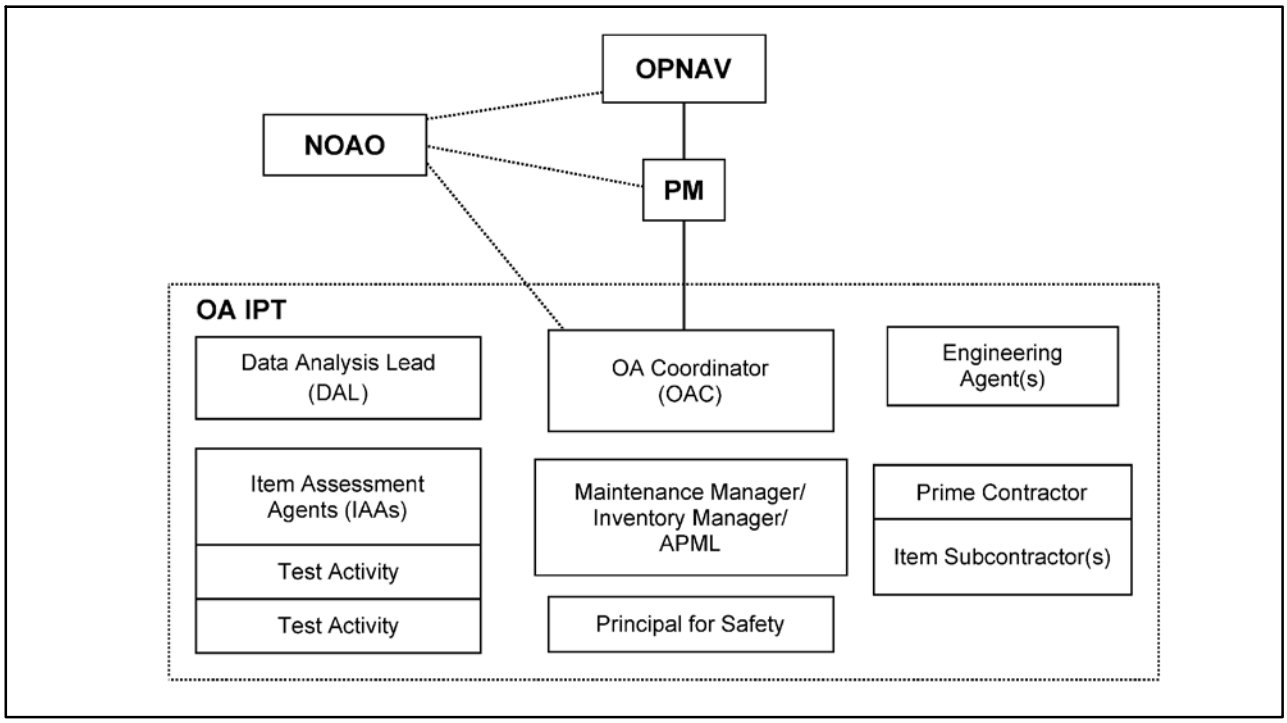

Figure G-1. Ordnance Assessment Program Structure

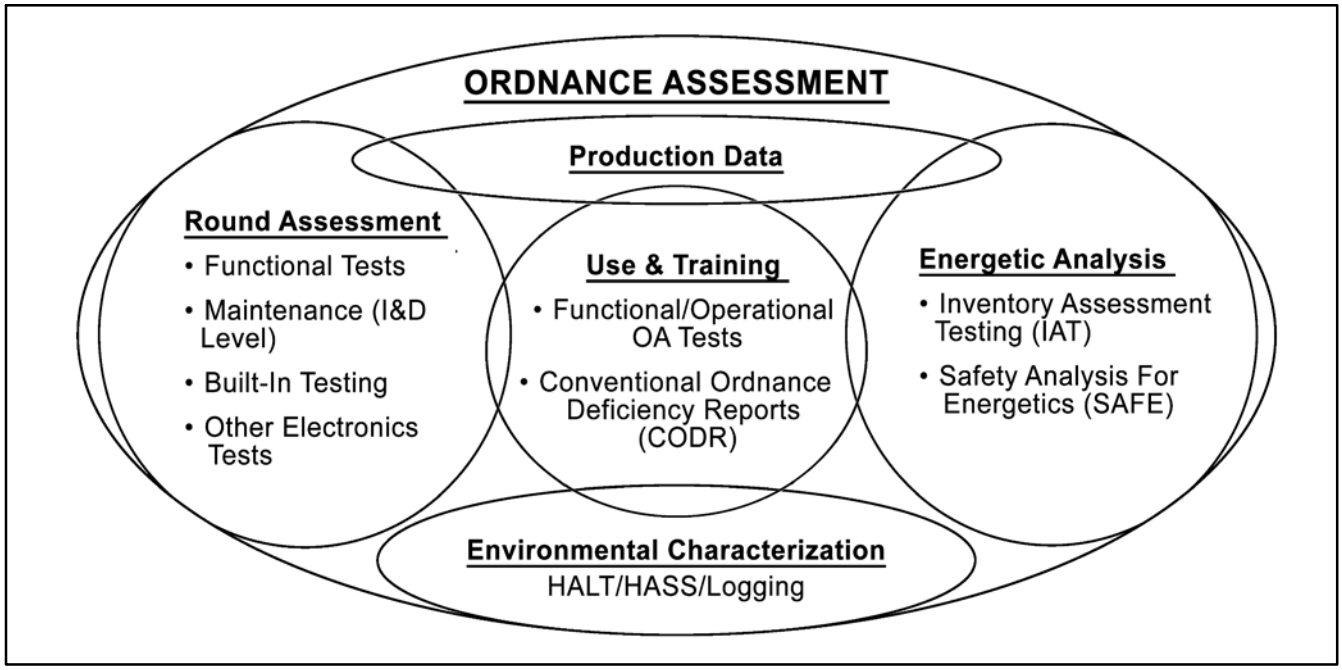

Figure G-2. Ordnance Assessment Data Sources

d. Determine current condition of the ordnance stockpile by assessing safety, quality, RAM and performance.

e. Thoroughly document and maximize use of standardized processes and analysis techniques.

f. Identify trends affecting the stockpile in order to predict the future condition of the ordnance stockpile and predict service/shelf life.

g. Provide timely, technically-sound and statistics-based recommendations for stockpile retention, restriction, improvement, disposal, or replacement actions to PMs responsible for developing, procuring, and maintaining ordnance so that they can use this information to drive decisions which ensure the product meets user requirements.

h. Monitor preventive or corrective actions and policies to determine the effect on safety, quality, RAM and performance.

G12.1 Round Analysis. Round analysis includes all areas that relate to the reliability and performance of the non-energetics portions of the weapon. This includes the guidance and control sections along with the fuzing and arming functions. Test results from maintenance test, sampling, Depot repair, and Built-In-Test (BIT) are analyzed to determine many reliability factors.

a. The most important element is an evaluation of the All-Up-Round (AUR) reliability. For ordnance systems using the periodic maintenance concept, each weapon is tested prior to original issue to the fleet. The time that the unit may remain in service prior to being returned for maintenance is known as the Serviceable-In-Service Time (SIST). Adding the SIST interval to the date of the test prior to issue to the fleet determines the Maintenance Due Date (MDD). MDD can be reduced if a subcomponent of the item has been determined to have a reduced service life. For new systems, there is a need to perform Round Analysis Program (RAP)

evaluations during the first SIST interval to validate the initial SIST and to assure that the in-service reliability is remaining above the system requirements. After retest and required maintenance, the MDD timeline is reset to the starting point. Next the reliability of the population shall be analyzed using data from the testing performed during periodic maintenance. This analysis will determine if reliability requirements are met. The maintenance interval may be adjusted depending on the results of the reliability analysis.

b. For ordnance without periodic maintenance, a Reliability Monitoring Program, based on sampling of fleet assets must be in place to determine the reliability of the stockpile. If the analysis determines that the reliability will fall below the requirement, maintenance or logistics actions will be taken to keep this ordnance system at the required reliability level.

c. The results of the AUR electronic reliability should be combined with the results of the analysis of the energetic components to develop a reliability estimate.

d. Depending upon the stockpile-to-target sequence of the ordnance, other reliability metrics may also be useful in assessing reliability. These metrics include: recording time exposure in high-stress environments, captive carry flight hour information, number of catapult launches and recoveries, test run time, AUR test equipment parameter data, component depot maintenance information, and Mean Time Between Failure (MTBF) for components which operate for extended periods pre-launch. Electronic analyses performed using BIT functions are also useful, but should not be used as the only analysis method, as BIT does not test all functions. Additional BIT results analyses should also include false accept/false reject analysis.

G12.2 Energetics Analysis. This is the testing of limited-life components and subsystems. It is performed to estimate the remaining service life of the inventory which generally will be based on three factors: sampling of ordnance items from the inventory, application of statistical inference, and modeling of physical processes. If the analysis indicates safety and reliability, performance characteristics are degraded; limitations on service life should be considered. These tests include non-destructive testing, destructive testing, and environmental monitoring. Two categories of evaluations are performed: Inventory Assessment (IA), i.e., testing of the status of the item, and Safety Assessment for Energetics (SAFE), which analyzes the properties and characteristics of the energetics themselves.

G12.2.1 Inventory Assessment Tests (IATs). IATs are performed by obtaining a representative sample from the stockpile of a component or end item, and testing the item to assess the safety, reliability, and performance characteristics. These may be non-destructive tests or inspections, or functional tests such as restrained firings. Preparation for the testing are often funded and performed in the Planning Year prior to the test execution year. Activities in the Planning Year include: Ordnance Assessment Item Test Plan (OAITP) development and approval; Standard Operating Procedure (SOP) development (or update); test equipment preparation, and sample acquisition. Because of the small sample size frequently used in a surveillance program, targeted sampling of production lots and strata of older components and/or components with suspected higher degradation rates should be considered. Additionally, items suspected or demonstrated to have the most severe degrading environmental exposure should also be targeted to build confidence that the samples are worst-case representatives of the in-service population. Programs may also gather inventory condition data from fly-away or inspection teams, such as the Mobile Ammunition Evaluation Reconditioning Unit (MAERU) to assess ordnance in storage at magazines or forward deployed.

G12.2.2 Safety Assessment for Energetics. SAFE tasks are performed to identify the degradation characteristics of a specific energetic material. The primary focus of a SAFE task is to ensure that items containing the energetic material remain safe for fleet storage, handling, transportation, and use; although the characteristics may also impact reliability and performance. SAFE tasks typically consist of various types of chemical analysis and safety tests such as sensitivity, card gap and cook-off tests in conjunction with mechanical properties tests and inspections. In some cases, a SAFE task may identify the safe service life of a specific ordnance item. But more often, SAFE tasks generate data that can be utilized during an IAT to provide a more complete picture of the safety, reliability, and performance of the stockpile.

G12.2.3 Accelerated Aging. Accelerated Aging tests are performed to identify the degradation characteristics of a specific material, component, or system in a high-stress environment, artificially degrading the item much faster than that level of degradation would occur in an operational or storage environment. Accelerated aging may be performed during program development, generally as part of the type qualification program for explosive components, or as a formal Highly Accelerated Life Testing (HALT) or a Highly Accelerated Stress Screening (HASS) program. These aging tests may aid significantly in determining the scope of the OA program and its ability to accurately predict degradation trends throughout the weapon's lifecycle.

G12.3 Functional/Operational OA Data. Functional or operational reliability and performance data may also come from opportunistic observation of planned fleet exercises, training evolutions using AUR or live inert-warhead training variants. Data for OA from these events is collected by telemetry, recovery, or scoring by trained observers who witness and record the function of the system. Examples of these programs include; Conventional Ordnance Performance Evaluation (COPE) and Warshot Reliability Action Panel (WRAP) tests. Ideally, the selection of items used in such events is coordinated by the OA program to maximize the value of the data collected to the OA program by targeting select populations of items or components. Preparation for the event, such as weapon buildup and loading, may also be observed to ensure that as much information as possible about the weapon and launch platform is collected before use. A special event report, Ordnance Assessment Item Test Report (OAITR) or the Ordnance Assessment Annual Report (OAAR), should provide performance results, analysis, and degradation trends.

G12.4 Sampling. For OA processes requiring sample selection and testing, the program follows the general phases outlined in Figure G-3. Normally, due to the periodic nature of such testing and the time required to properly perform these functions, this process is a two- to five-year operation. Input from other data sources, listed in Figure G-2, similar weapons programs, etc., should play a part in a well-coordinated program. The nominal process for performing an analysis and making corrections once a failure or change is detected is depicted in Figure G-4. Note that this is, fundamentally, a Failure Reporting and Corrective Action System (FRACAS).

G12.5 Deficiency Analysis (Fleet and Maintenance). Deficiency analysis consists of a rigorous review and assessment of all deficiency reports submitted by the Fleet or observed during maintenance activities. Problem categories are analyzed and failure trends are identified and tracked to assist the failure resolution process. Problem reports are tabulated to determine possible trends. Non-test problems such as handling and environmental damage are also reported and tracked for potential trend analysis and problem resolution.

G12.6 Warranty Analysis. To effectively implement weapon warranties, it is necessary to collect, manage, disseminate, and analyze warranty data in a timely manner. The OA process can fulfill this need, so warranty analysis functions and OA should be coordinated. The specific data types and data elements required to accomplish Warranty Analysis can be critical in determining if the weapon is meeting reliability, performance or other KPP requirements. The PM is responsible for warranty analysis and implementation. Warranty price and projected operational support costs should be the main drivers in deciding whether to purchase a warranty.

G13 Responsibilities. This appendix establishes organization-level responsibilities for OA. The following paragraphs provide further recommended functions and structures for these responsibilities.

G13.1 Navy Ordnance Assessment Office (NOAO). DODINST 5000.2 establishes Naval Ordnance Safety and Security Activity (NOSSA) as the NOAO, with the following duties:

a. Provide assistance to PMs for OA activities, and aid in selection and implementation of scientifically-based assessment techniques.

b. In concert with PMs, develop Ordnance Assessment Program Plans (OAPPs) and documentation template(s), assessment tools, processes, and procedures.

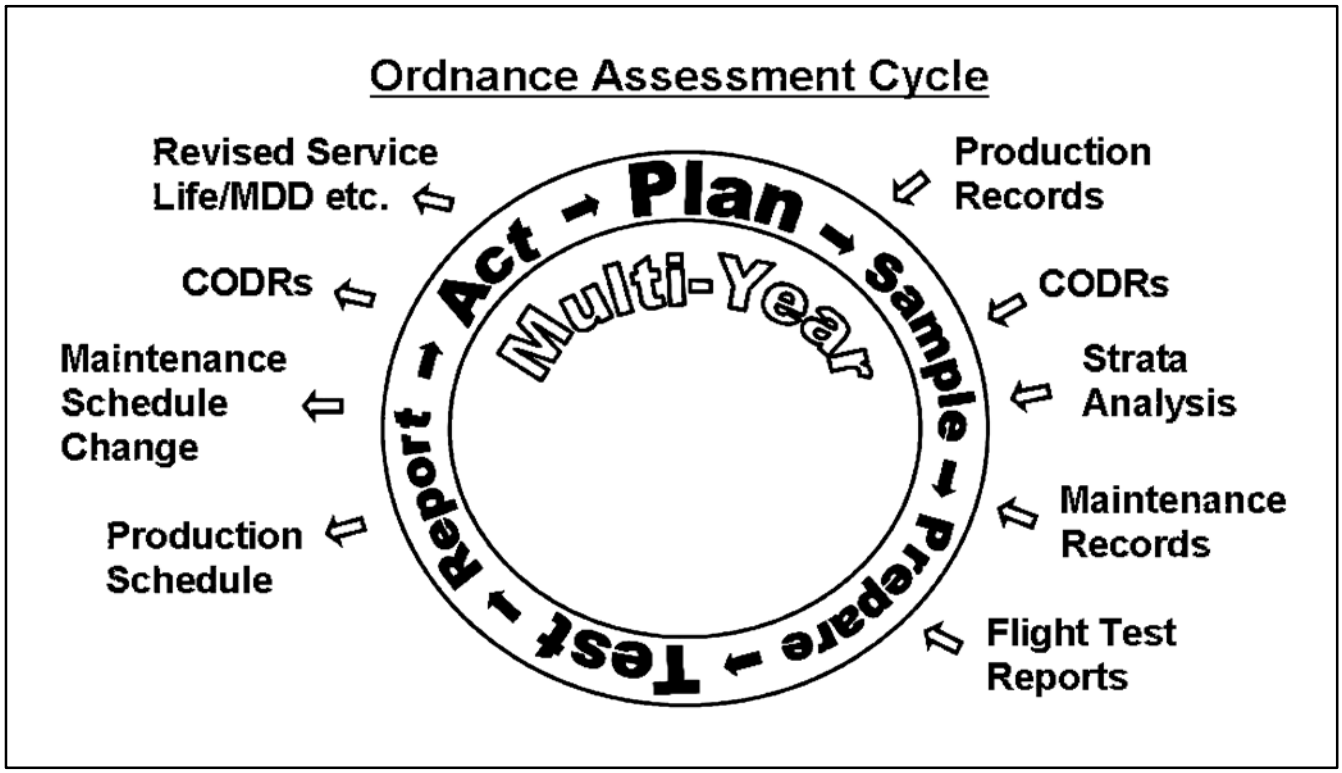

Figure G-3. Ordnance Assessment Cycle

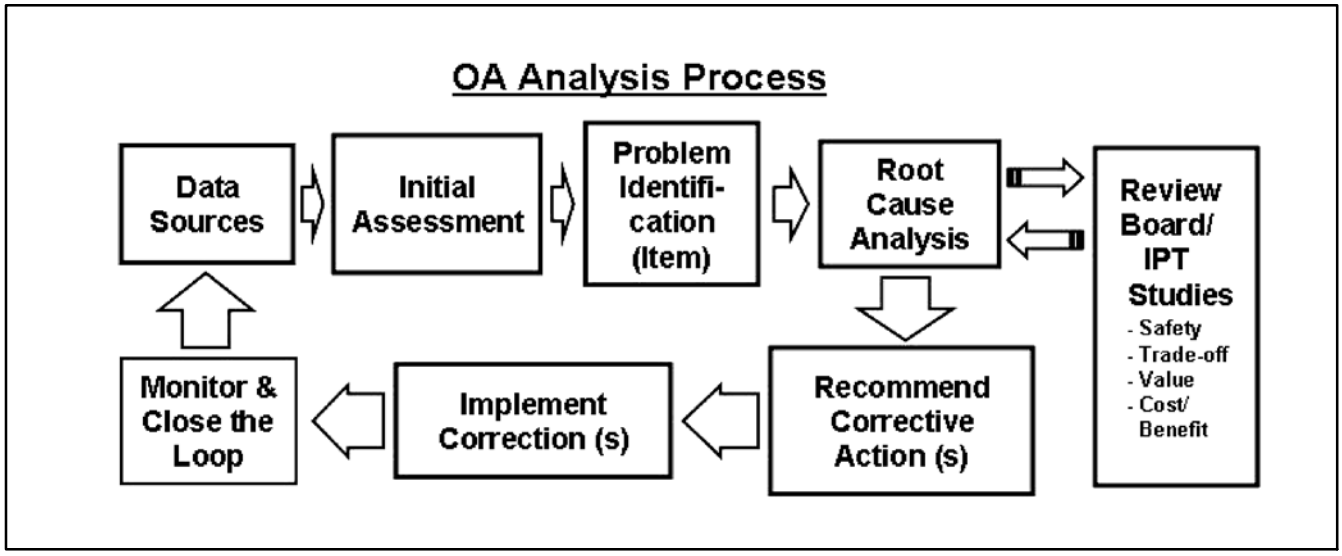

Figure G-4. Ordnance Assessment Analysis Process

c. Promulgate best practices across programs, disseminate information on OA related issues, and provide coordination in all aspects of Navy OA across all Navy and Marine Corps ordnance programs.

d. Assist with OA aspects of the Weapons Readiness Review (WRR) and organize OA conferences and meetings as necessary to help integrate OA across all Navy and Marine Corps ordnance programs.

e. Manage and execute life-cycle responsibilities, including all budgeting and execution functions, for the Navy and Marine Corps Ordnance Assessment Technologies and Equipment (OATE) program to support all Navy and Marine Corps conventional ordnance OA efforts.

f. Ensure OA technologies, equipment, and processes are fully compatible and integrated with the Weapon System Explosive Safety Review Board (WSESRB) and Navy and Marine Corps programs.

g. Implement use of standardized OA reporting formats and tools.

h. To assist in these functions, the NOAO will form adhoc teams consisting of OA technical specialists to develop policy, processes, formats, and guidance for Navy OA programs.

G13.2 Program Manager. In support of the OA program, the PM or his designated Assistant Program Manager for Logistics (APML), performs the following functions throughout the life-cycle via his designated lead for in-service OA and maintenance:

a. Funds OA program development during Research and Development (R&D) and procurement, planning and execution during the in-service phase.

b. Designates specific members of the OA Team.

c. Approves the overall scope of the OA program, the list of OA Items, OAPPs, OAITPs, OAITRs and OAARs.

d. Approves OA parameters, and the thresholds for these parameters, which drive maintenance actions or end of service life.

e. Manages test capabilities to ensure they support the maintenance process and OA data requirements to measure required parameters until system disposal.

f. Provides funding for acquisition of OA spares, contractual data elements to acquire data, extraction and shipping of samples to OA test activities in the planning year, and execution of the OA program in accordance with the OAPP.

g. Utilizes the Optimized Performance Model (OPOM) and Ordnance Assessment Planning Module (OAPM) to develop, track, and manage OA testing and support requirements in OPOM.

h. Acts upon results of the testing and recommendations of the Ordnance Assessment Coordinator (OAC) and appropriate leads. Provides closed-loop feedback concerning OA component test report recommendations to the OAC and Item Assessment Agent (IAA)/OA test activity within 30 days after the report is issued.

G13.3 Ordnance Assessment Team Roles. The following paragraphs provide recommended functions and structures for OA team members under the PM. These roles and responsibilities should be formally designated by the PM. For smaller programs, multiple responsibilities may reside in a single person; and for larger programs, the designee may represent a team performing the function.

G13.3.1 Ordnance Assessment Coordinator. An OAC leads the OA Integrated Product Team (IPT), coordinating the OA Team efforts for the PM. This person should be an experienced, recognized system-level subject matter expert in degradation of the weapon systems and items under his/her cognizance. In order to maximize technical coordination, increase efficiency and reduce costs across programs, the OAC selected should support multiple programs for a commodity type (i.e., missiles, torpedoes, rockets, ammunition, pyrotechnics, etc.), providing expertise across programs and systems commands, especially where two or more ordnance share common components. The OAC performs the following functions:

a. Assist in development and application of OA policy for cognizant systems, interfacing with the appropriate organizations.

b. Develop input to the OAPM for development of multi-year plans.

c. Recommends to the PM/APML appropriate test activities and interfaces with these activities to monitor performance of assigned workload on behalf of the PM.

d. Deals with technical issues that concern the appropriate commodities (i.e., test method and sample selection, technology support, interpretation of data).

e. Reviews test plans and reports and ensures conformance to policy.

f. Ensures use of standardized OA reporting formats and tools.

g. Utilizes the OA module and validates OA elements in OPOM.

h. Reviews OA reports and recommendations from the IAAs, provides recommendations to the PM via the process established by the PM in the OAPP and publishes reports to All Weapons Information System (AWIS).

G13.3.2 Data Analysis Lead (DAL). The DAL support the OA program by performing data analysis tasks for the weapon or component from various data sources. Tasks typically include determining statistical frequencies, analysis of production strata, development of statistical models, and developing data analysis processes and tools.

G13.3.3 Item Assessment Agent. The IAA performs testing and analysis work on systems and samples. The IAA integrates data from various data sources to perform a comprehensive assessment and has responsibility to:

a. Provide annual and out-year budgets and proposals to the OAC and prepare Statements of Work (SOWs) for the test activities.

b. Select tests, test activities, prepare and revise the OAITP.

c. Prepare or coordinate SOPs.

d. Develop, validate, maintain and follow OA inspection and test procedures, local SOPs, and test specifications.

e. Identify desired test samples per the OAITP.

f. Perform a review of test preparedness prior to OA testing. Scheduling of this review should be scheduled early enough so that all resulting action items can be closed prior to the scheduled test date.

g. Monitor tests to establish safety and reliability of operational or stored systems, components and spares.

h. Within 60 days of completion of testing, forward a quick-look report indicating test completion has occurred and general test results to the OAC.

i. Issue an OA quick emergency action report to the OAC and PM within 48 hours if the component has become unexpectedly unsafe or unreliable.

j. Forward a final report detailing all findings, conclusions, and recommendations with OAITP members review comments to the OAC for review, comment and endorsement.

k. Monitor failure reporting systems for failures or performance issues of the ordnance item under their cognizance and perform analyses to determine if there are potential safety, reliability, or performance issues. Participate as a member of the FRACAS team as required for failures relevant to their system.

l. Perform failure analyses as appropriate or submit a failure analysis proposal and budget to perform the investigation if current funding is inadequate.

m. Prepare Contract Data Requirements List (CDRL) for assigned OA Item and submit to the OAC for consolidation and forwarding to OAPM.

n. Prepare and maintain spare requirements list to support the destructive testing to avoid inventory impact.

o. Maintain technical proficiency on assigned OA item and cross train staff to assure continuity to OA program.

p. Identify the need for new test techniques and equipment, submitting proposals to the OAC for review and endorsement for OAPM or OA test equipment sponsor.

G13.3.4 Test Activity. Participating OA Activities shall perform OA testing and are responsible to:

a. Perform OA work and report status and progress.

b. Verify and maintain OA inspection and test procedures and test specification for each assigned system or ordnance component.

c. Perform and monitor tests to establish safety and reliability of operational or stored systems, components, and spares; and perform failure analyses as appropriate.

d. Within 30 days of completion of testing, forward test data and conclusions detailing all test results and anomalies to the IAA.

e. If testing indicates the component may have become unexpectedly unsafe or unreliable, immediately contact the IAA and provide details of the situation.

G13.3.5 Principal for Safety (PFS). The PFS participates in the OA IPT by:

a. Assisting in development of the OA concept and OAPP, quantifying risks in conjunction with various safety documents and functioning as the PMs interface with the WSESRB.

b. Participating in the in-service FRACAS; assessing and validating risks of failures and degradations, providing inputs to the various documents and reports, and advising the PM regarding safety risk.

G13.3.6 Engineering Agents, Prime Contractor, Item Subcontractors. Participate in the OA IPT by:

a. Functioning as technical experts for the team for issues/items under their cognizance as directed by the PM.

b. Leading/participating in engineering and technical analyses for items under their cognizance, as directed by the PM.

G13.3.7 Inventory Manager/Logistics Manager/APML. Participate in the OA IPT by:

a. Providing resources and test articles to the OA program.

b. Developing/reviewing/evaluating/reporting impact of possible inventory actions from OA findings on the stockpile.

G14 Predictive and Analysis Models. Predictive models are used to project safety and reliability trends for OA test items. Appropriate trend-plotting algorithms and confidence level determination methods should be used and documented in the OAPP at the system level, and in the OAITP for components. Analysis models and tools, such as Bayesian analysis, should be utilized to maximize the utility of available data and likewise documented.

G15 Documents. Below are the primary supporting documents for an OA program. System Commands (SYSCOMs) or programs may have additional document requirements. Other documents may be required by the Systems Command's Program Executive Officer (PEO), or PM.

G15.1 Ordnance Assessment Program Plan. An OAPP defines the responsibilities, requirements, and schedule associated with the evaluation of the readiness of a system. The plan will provide the strategy for assessment of the system and components, indicating data sources and how the data contributes to the assessment of the weapon and components. For IAT and SAFE tests, the plan will provide the structure and decision process to identify what items will be tested each year, how those items are selected and retrieved. The planning component of the OAPP will assign activities to perform those tests and evaluations. The plan is a living document developed at program inception and reviewed periodically as required to account for previous maintenance, repair, testing, and OA results and any changes in Fleet requirements. An OAPP template is provided as Figure G-5 located in the back of this appendix and should include:

a. Participant roles and responsibilities.

b. OA linkages to maintenance planning.

c. OA test planning.

d. Data collection processes.

Template for Development of
Ordnance Assessment Program Plan

1. Introduction.

1.1 Purpose of OAPP. The purpose of this OAPP is to describe the OA process for the in-service stockpile of Navy "designate weapon family". This document delineates responsibilities for determining and maintaining continuous ordnance assessment information for Navy "designate weapon family" in accordance with this manual. Appendix N of this manual provides a list of acronyms used in this document.

1.2 Reference Documents. Provide a list of all official instructions relevant to OA of the in-service stockpile of the system, including the following, at a minimum.

a. Requirements Documents: Operational Requirement Document (ORD), Mission Need Statements (MNS), Capability Development Document (CDD), etc.

b. OPNAVINST 8000.16D.

c. OPNAVINST 8020.14/MCO P8020.11

d. Department of the Navy Explosives Safety Policy.

e. Etc.

1.3 Scope. This OAPP applies to all active weapons and components managed by the "insert appropriate program". These items are identified as Ammunition Class Code "insert appropriate code(s)" in NAVSUP P-802, Navy Ammunition Logistic Code (NALC), and are described in "insert relevant technical manuals". Insert a list of the OA Items, PNs, NALCs.

OA Item Eligibility. The purpose of this section is to identify every OA item from this weapon family that the weapon PM has included in the OAP. Provide a list of factors that have been considered before making the decision to include or exclude system components in the OAP. Also identify how these factors influence the decision of whether testing should be limited to safety, reliability or performance characteristics. Provide a reference to the recommended OA approach to each item listed in Figure G-6.

1.4 Ordnance Assessment Program Objectives. Naval conventional ordnance as well as electronics degrades due to age and/or exposure to environmental stressors, manifesting in changes to safety, reliability and/or performance characteristics. These changes must be predicted, detected, identified and mitigated to prevent unacceptable risk involving safety and/or mission performance.

1.4.1 OA shall be used to evaluate the safety, reliability and performance characteristics of all in-service naval conventional ordnance, including AUR electronic systems. The OA effort will provide support to the PMs throughout conventional ordnance life cycle, or until the conventional ordnance is removed from service. Additionally, the OA program will:

a. Determine the current condition of the inventory through test, evaluation, or engineering assessment of the safety, reliability and performance characteristics.

b. Identify trends in those characteristics, predict the future condition of the stockpile, and predict expected service or useful life and/or maintenance interval in terms of safety, reliability, or performance.

c. Identify causative factors that affect the health of the stockpile or item in the stockpile-to-target sequence including those originating from design, assembly, maintenance, handling, storage, deployment and interfaces with weapons and combat systems.

d. Provide technically and statistically based evaluations for the PMs to effect stockpile management decisions.

Figure G-5. Ordnance Assessment Program Plan (OAPP) Format

e. Perform statistical analysis on test data associated with AUR electronics tested as part of a periodic maintenance or tested as part of a sampling program for RCM weapons. This data is also used to support other analysis as determined by the APML.

f. Analyze data gathered to determine the health of the weapons stockpile, to formulate data to satisfy the program readiness reporting requirements to appropriate organizations and report on the health of the program at the WRR.

2. Roles.

2.1 Provide a list of all positions that directly affect the planning and execution of the OA program for this weapons family. Include under each position a list of all actions required during the planning and execution phases of the OA cycle. The list of positions should include the following, at a minimum.

a. Program Manager or equivalent.

b. Assistant Program Manager or equivalent.

c. Ordnance Assessment Coordinator.

d. Item Assessment Agent.

e. Assistant Program Manager for Systems Engineering (APMSE) or Class Desk Engineer.

f. Other relevant designated OA positions. (Principal for Safety, Contractors, Maintenance Manager(s), etc.)

3. Ordnance Assessment process, locations and schedule. Provide a chronological list of all actions required from all positions along with required completion dates for the OA program to be planned and executed in a timely manner. Provide a reference to the plan of action and milestones to be conducted at each location. All required actions should be identified as occurring during the planning year or the test year.

3.1 Location. Identify each location involved in executing the OA program.

3.1.1 Tasks. Identify the tasks being conducted at each location.

3.1.1.1 Planning Year tasks. Provide an overview of tasks to be accomplished at each location in the planning year. Provide a plan of action and milestones for each location.

3.1.1.2 Test Year tasks. Provide an overview of tasks to be accomplished at each location in the test year. Provide a plan of action and milestones for each location.

4. Long-term planning.

4.1 Item Eligibility. The purpose of this section is to ensure that every item from this weapon family in the serviceable Navy stockpile has been identified and addressed by the OA program, regardless of whether or not the inventory of the item merits a test program. Provide a list of factors that have been considered before making the decision of whether to sample and test. Also identify how these factors influence the decision of whether testing should be limited to safety, reliability or performance characteristics. Provide a reference to the recommended OA approach to each item listed.

4.2 Interfaces with Other Services. Provide a description of how the Navy OA program will interface with the OA programs for other services to ensure that no duplicate testing will occur and that all available data will be utilized for maximum efficiency.

4.3 Multi-Year Plan. Provide a description of the multi-year plan for this weapon family and the information it contains. Include a description of how factors such as test results, funding constraints and ammunition management actions may result in changes to the plan.

Figure G-5. Ordnance Assessment Program Plan Format - Cont.

5. Item test planning.

5.1 Test Philosophy. Provide a general description of the decision-making process used to determine what are the critical parameters and tests and information necessary to evaluate these parameters. Include a list of all factors that should be considered when making these decisions. Provide a reference to the list of data sources for use by the IAA. It is not necessary to address specific items and the tests that will be performed in the OAPP. That is the purpose of the OAITP. However, it may be worthwhile to address in greater detail specific approaches that are common to numerous items in this weapon family.

5.2 Stratification and Sampling. Provide a general description of the decision-making process used to determine how the current active inventory of each item in this weapon family will be stratified and sampled. Explain the difference between stratifying into separate populations assumed to be non-homogeneous, and identifying potential sub-populations within a stratum. It may be useful to identify known historical degradation trends, based on previous test results, to justify these processes. Identify production data that will be considered as factors in identifying potential sub-populations. Identify significant subcomponents common to this weapon family on which stratification will be based. Discuss how sample sizes will be selected to achieve a minimum reliability requirement and to detect non- homogeneity between lots. Also, address criteria used to decide whether strata with small quantities are cost-effective-to-sample.

6. Lot selection and requisition process.

6.1 Provide a general description of the decision-making process used to select specific lots for requisition. Include all factors that must be considered in order to select lots that can reasonably be expected to arrive for testing. Also include a brief description of the requisition process from lot selection to sample delivery.

7. Data analysis and report.

7.1 Provide a general description of the thought process used to analyze the test data and develop conclusions and recommendations. Identify how the data will be analyzed to confirm or disprove the assumptions made during stratification. Identify how the data will be analyzed to determine failures, and whether procurement requirements or differing in-service requirements will be used. Identify how reliability will be defined, and how degradation trends will be analyzed.

8. Reporting Processes.

8.1 Provide a brief description of the test plan and report review routing, endorsement and acceptance process.

Figure G-5. Ordnance Assessment Program Plan (OAPP) Format - Cont.

e. Test locations and responsibilities.

f. Data analysis.

g. Report follow-up processes.

h. Electronic Analysis.

i. IATs.

j. SAFE activities.

k. Utilization of operational testing sources and programs such as the COPE, MAERU, and other program-specific resources.

l. Routing and approval for OA documents (test plans, test reports, etc.).

G15.2 Ordnance Assessment Item Test Plan. An OAITP is developed for each discrete item/subcomponent tested under the OAPP, documenting the activities that will be performed during the testing and assessment of a weapon system or family of systems. This document will address methods, specifications, previous test results and malfunction history, test processes, inventory profile, stratification, and sample selection. The OAITP will be revised by the IAA following each test series in coordination with the OAC in order to document test requirements for the following testing cycle before OA testing is scheduled. A template for an OAITP is provided as Figure G-6 located in the back of this appendix and should include:

a. Participant roles and responsibilities.

b. OA test planning.

c. Tests and data to be performed and collected.

d. Data analysis strategy and methods.

e. Reporting requirements.

f. Analysis approach.

g. Templates for test plans, data collection sheets, test reports, etc.

h. CDRLs.

i. Spares.

G15.3 Ordnance Assessment Item Test Report. The program office should monitor the status of execution of all testing. The OAITR documents the test results and will provide conclusions and recommendations for disposition of the population as well as recommendations for future OA testing and analysis. A template for an OAITR is provided as Figure G-7 located in the back of this appendix. If, during the course of a test, a condition is discovered which indicates that the component has become unexpectedly unsafe or unreliable, an Emergency-Action Report shall be submitted to the PM and the OAC as soon as possible - within 48 hours after discovery to provide details of the deficiency. Failures which occur in an unexpected manner, or with a higher than expected severity and a potential for occurrence in the inventory, during handling or in use should also be reported as explosive safety incidents, per OPNAVINST 8020.14/MCO 8020.11.

OAITP ID Number

Ordnance Assessment Item Test Plan
for
FY 20XX Inventory Assessment Test
of
Item Nomenclature
NALC, Navy Stocks

Cognizant Organizational Unit
Ordnance Assessment Activity
Location

Prepared by:

_____
Author

Reviewed by:

_____
First level review

Reviewed by:

_____
Second level review

Approved by:

_____
Approval authority

Distribution Statement: As required

Destruction Notice: As required

Figure G-6. Ordnance Assessment Item Test Plan (OAITP) Format

1. Introduction. The purpose of section 1 is to inform the reader why this document was generated and what will ultimately be achieved. In most cases, this can be largely accomplished by referencing other governing documents.

1.1 Scope. Provide a statement specifically defining why this OAITP has been developed and what document authorized it. Provide a reference to the work unit assignment. If no work unit assignment has been issued, provide a reference to the funding document. Provide a reference to the appropriate OA Program Plan if it exists. Clarify that the document authorizing development of this plan also authorized preparations for the IAT including sample acquisition, SOP development, and test equipment preparation.

1.2 Objectives. Provide a statement describing the specific objectives of the planned OA task. Generally, the objectives of IATs are to assess the current condition of the stockpile in terms of safety, reliability and performance, to identify and evaluate factors affecting the condition of the stockpile, and to identify trends in order to predict the future condition of the stockpile. Address any specific objectives of the planned task that are not covered by the previous statement.

Note

These objectives should have been described as part of the last OAITR.

2. Item description and requirements. The purpose of section 2 is to inform the reader about the test item that is being evaluated. How is the item identified by the Navy? What does it do and how does it work? How must it perform in order to be considered suitable for in-service use? Are these same requirements specified for acceptance? What characteristics of the item are considered to be vulnerable to degradation as the stockpile ages? In theory, the answer to each of these questions should be defined prior to actual production.

2.1 Item Description. Provide a brief description of the item, its operation, and its intended use. (Assume that the reader has some technical knowledge of the applicable weapon system or family.) An illustration of the item and related components is recommended. Mention other systems using this component (or very similar components). Describe the active inventory and the rationale for stratification of the inventory. Using information from the weapon PM, provide the latest estimated life of the system the item supports.

2.2 Provide a table identifying the test item by NALC, NSN and nomenclature. If more than one item is being evaluated, a brief description of the similarities and differences between the items may be appropriate at this point.

NALC/ DODIC	National Stock Number (NSN)	Nomenclature

Item Identification Table

2.3 Safety, Reliability and Performance Requirements. Provide a description of all attributes required for the item to be considered safe and reliable for in-service use. This will generally begin with a discussion of the specification requirements for acceptance. If so, provide a reference to the governing document.

a. Address any acceptance requirements that have been relaxed for in-service use at the direction of systems engineering. Address any parameters that are not considered during acceptance, but are utilized by the OA program to aid in assessing degradation.

b. Provide a discussion of the item characteristics that are vulnerable to degradation, based on historical trends of similar items and materials, and engineering judgment

Figure G-6. Ordnance Assessment Item Test Plan (OAITP) Format - contd.

2.4 Service Life Assignment. Identify the service life that has been assigned to the item and a visual chart of the current active inventory and the current service life impact on inventory going over age by FY. In most cases, the item is assigned a service life based on RCM.

3. Background. The purpose of section 3 is to inform the reader of known quality issues that have surfaced during the production and in-service phases of the life-cycle. Over the years, many units have likely been subjected to qualification, first article, lot acceptance, and OA testing, as well as fleet usage in training exercises and operations. What have we learned from reported failures that will impact the methods we use to sample, test, and analyze data?

3.1 Production History. Provide a description of the current stockpile in terms of all manufacturers, including a production date range for each manufacturer. Address whether there is evidence that non-homogeneous strata exist based strictly on production data. If production information for much of the stockpile is unknown due to missing ammunition data cards, it should be documented here. Discuss any restrictions that have been placed on usage of the current stockpile, or specific lots in the current stockpile, as a result of failures encountered during qualification, first article, or lot acceptance testing.

3.2 Fleet Malfunction History. Provide a summary of known malfunctions that have been reported by the fleet. It is not necessary to list every Conventional Ordnance Deficiency Report (CODR) that has been submitted for the item, but focus on problem areas that are known to exist. Discuss any restrictions that have been placed on usage of the current stockpile, or specific lots in the current stockpile, as a result of these problems. It may also be useful to discuss whether other lots have been taken out of service as a result of these problems.

3.3 Historical OA Test Results. Provide a summary of problems known to exist in the current stockpile as a result of all previous OA tests. Focus on areas of known failure and trends that are expected to lead to eventual failure. Discuss any restrictions that have been placed on usage of the current stockpile, or specific lots in the current stockpile, as a result of previous OA. It may also be useful to discuss whether other lots have been taken out of service as a result of previous OA.

NOTE

Provide a comprehensive summary of the most recent OA test including sampling and test processes, results, conclusions, recommendations, and ammunition management actions taken by the program office.

4. Technical analysis and approach. The purpose of section 4 is to describe to the reader how the information provided in the previous sections of this document has been used to decide on the test processes described in section 5 and the sampling processes described in section 6.

Section 2.2 included a discussion of the item characteristics that are considered vulnerable to degradation. Discuss, based on previous test results, which of these characteristics are the least likely and most likely to have degraded significantly since the most recent OA. Which parameters are the least and most expensive to measure? Identify the differences between the tests performed in the last OA and those determined to be necessary for the next planned OA, and the thought processes that led to these decisions.

This section may also merit some discussion of the stratification and sampling process, especially if a particular problem has been observed to exist only in a subpopulation of the stockpile.

5. Testing. The purpose of section 5 is to describe to the reader the specific test processes that will be performed on the samples. These test process will be determined by the selection of the specific test objectives of each OA cycle.

5.1 Provide a description of each test process (i.e., visual inspection, X-ray inspection, leak test, function test). Describe any special equipment or tools required to execute each test. Identify specific traits that will be observed during inspections, and any safety or performance requirements that have not already been identified in the plan.

Figure G-6. Ordnance Assessment Item Test Plan (OAITP) Format - contd.

6. Sampling. The purpose of section 6 is to describe to the reader what samples are required, and how those samples will be considered to represent the active stockpile.

a. Provide a discussion of all information regarding stratification that has been presented in the previous sections, and conclusions that have been reached for the best current approach. Describe how the test data will be analyzed to determine whether the current approach is valid.

b. Provide a table that presents a breakdown of the current serviceable stockpile. Use one of the following two options to present the inventory.

Option 1 - If there is a limited number of lots, present the inventory quantity and condition code for each lot. If non-homogeneous strata are considered to exist, or if the stockpile has been grouped into potential subpopulations for analysis, identify them for each lot. Identify whether each lot has been sampled in previous IATs, and the number of samples required for each lot along with a brief justification for those quantities.

Stratum or Group	Lot Number	Serv. Qty.	Cond. Code	Sample Qty. in 19XX IAT	Sample Qty. in 20XX IAT	Req'd. Sample Qty.
1						
2						
3						

Sample Plan Table (Option 1)

Option 2 - If too many lots are in the serviceable stockpile to make the above table practical, provide a table that defines how the stockpile has been stratified, or grouped into potential subpopulations for analysis. Present the inventory quantity and condition code for each stratum or group. Identify the number of samples required for each group along with a brief justification for those quantities.

Stratum or Group	Lot Span, Lot Interfix Number, Contract, Manufacturer / Year of Manufacture or other	Serv. Qty.	Cond. Code	Req'd. Sample Qty.
1				
2				
3				

Sample Plan Table (Option 2)

Figure G-6. Ordnance Assessment Item Test Plan (OAITP) Format - contd.

NOTE

Provide a general overview of how test lots will be selected from the inventory to meet the requirements listed above. Provide a list of all Non-Combat Expenditure Allocations (NCEA) that will be required to obtain the necessary materials and execute the planned tests.

7. Data analysis and report. The purpose of section 7 is to describe to the reader how the data obtained from the planned tests will be analyzed and reported.

7.1 Provide a discussion of how the resulting test data will be used to determine the presence of failures. Discuss how the data will be analyzed for homogeneity to test the assumptions made regarding stratification. Discuss how the data will be used to determine stockpile reliability. Discuss how the data from this and previous testing will be analyzed to identify degradation trends.

7.2 Provide a brief summary of what will be provided in the final report, in addition to these analyses. Also provide a statement identifying any data that will be entered into database systems after release of the report.

8. Resource Requirements. Provide a table with the current and out-year sample requirements and the funding requirements for this evaluation.

9. References.

Figure G-6. Ordnance Assessment Item Test Plan (OAITP) Format - contd.

OAITR ID Number

FY 20XX Inventory Assessment Test Report
of
Item Nomenclature
NALC, Navy Stocks

Cognizant Organizational Unit
Ordnance Assessment Activity
Location

Prepared by:

_____
Author

Reviewed by:

_____
First level review

Reviewed by:

_____
Second level review

Approved/Released for publication by:

_____
Approval/Release authority

Distribution Statement: As required

Destruction Notice: As required

Figure G-7. Ordnance Assessment Item Test Report (OAITR) Format

EXECUTIVE SUMMARY

Test Results and Analysis

Provide a brief summary of the test results presented in section 3 of the report body. Focus on the results that impact the serviceability of the active stockpile and indicate the percentage of the active inventory represented by items covered by this report. Present the results of data analysis in terms of stockpile homogeneity, safety, and reliability degradation trends.

Conclusions

Present a summary of the conclusions supported by the contents of the report body.

Recommendations

Present the same recommendation as those in section 5 of the report body.

Figure G-7. Ordnance Assessment Item Test Report (OAITR) Format - contd.

1. Introduction. The purpose of section 1 is to inform the reader why this evaluation was performed and what planning took place prior to its execution. In most cases, this can be largely accomplished by referencing other governing documents and the previous OA Item Report.

1.1 Scope. Provide a statement specifically defining why this evaluation was performed and what document authorized it. Provide a reference to the work unit assignment. If no work unit assignment has been issued, provide a reference to the funding document.

1.2 Objectives. List the specific objectives of this assessment. These objectives should have been identified in the previous OA Item Test Reports recommendations.

2. OAITP Implementation. The purpose of section 2 is to inform the reader how successfully sample requirements were fulfilled, of unexpected modifications to the test plan, and any other issues encountered during the planning phase of the evaluation.

2.1 Test Sample Description. Provide a table listing the lot number and condition code of all samples received for test. Group the samples according to the strata or potential subpopulations identified in the OAITP, if applicable. State whether the sampling goals in the OAITP were met. If the sampling goals were not met, state the reason why, such as insufficient NCEA provided to requisition assets, no assets available at Continental United States (CONUS) locations, requisition not filled, etc. Discuss any substitute samples that were obtained because the original sampling goals were not met

Stratum or Group	Lot Number	Condition Code	Quantity
1			
2			
3			

Test Samples Table

2.2 Operating Procedures and Test Processes. Provide a statement identifying where the tests were executed and any local standard operating procedures used to perform the tests. State whether these test processes were in accordance with the OAITP, and if not, why.

3. Test results and analyses. The purpose of section 3 is to inform the reader of specific test results, and how those results have been used to identify failures, analyze homogeneity, determine safety and reliability, and analyze trends. As part of this analysis, include information and data from all data sources available: Production data, prior testing, maintenance, operators, CODRs, COPE, etc. This should be an integrated analysis of all available information regarding this item. These analyses should be performed in accordance with section 3 of the OAITP.

3.1 Test Results. For inspection results, provide a narrative describing anomalous conditions for each test lot. If numerous conditions are observed, a table showing the number of anomalies for each lot is recommended. Describe the expected impact of each anomaly on the serviceability of the item.

NOTE

For performance test results, provide all the individual data points and a narrative identifying the number of failures for each lot. If the data can be presented in a small table (less than one page), it may be included in the report body. Otherwise, present it in an appendix and provide a summarized version in the body. Describe the expected impact of each failure on the serviceability of the item.

Figure G-7. Ordnance Assessment Item Test Report (OAITR) Format - contd.

3.2 Homogeneity Analysis. Explain the statistical analyses used to test the assumptions made regarding stratification in section 6 of the OAITP. Determine whether the approach is still considered valid or should be modified. Provide a conclusion regarding how the stockpile should be stratified for service life designation.

3.3 Safety. Based on the test results, discuss the safety of the stockpile, or various strata if applicable. This may include the proximity of test data to established safety-critical requirements, unexpected safety-critical failure modes not identified in the specification requirements, or both.

3.4 Performance. Provide a discussion of test results that are not meeting the specified requirements, but are not expected to impact the safety or reliability of the stockpile.

3.5 Reliability. Based on the test results, discuss the reliability of the stockpile, or various strata if applicable, to meet the established requirements. If practical, assign an overall reliability to the stockpile, or individual strata, based on these requirements.

3.6 Trend Analysis. Present an analysis of data from this and previous evaluations identifying degradation trends in order to predict the future condition of the stockpile. For each analysis, identify the length of time the stockpile, or individual strata, are expected to remain free of failures.

3.7 Minimum Predicted Service Life (MPSL). Following each evaluation, an MPSL should be established or updated for each item if there is no indication of an end of useful life. If the end of life is indicated, then a service life should be established for the item and plans for replacement or removal from service should be made.

a. The MPSL is a prediction, based on currently available data, of how long the item should be able to remain in service. The MPSL will frequently be extended during the following test cycle as more information becomes available. In order to establish the MPSL, the test activity should analyze the test results, concentrating on known or projected failure modes. Analysis of the trends for critical performance factors, with projections of the trend into the future, should be performed to determine when the test reading will be outside of the established limits. Knowledge of the behavior of the individual test element degradation is necessary to make a good projection. Test factors that are known to have a linear degradation allow a longer projection than factors that may have a sudden degradation.

b. The MPSL will be used in conjunction with the Date of Manufacturer (DOM) of the oldest items to establish the Earliest End of Life (EEOL). For example, if the earliest DOM is 1988 and the MPSL is 20 years, then the EEOL would be 2008. This means that the units should be acceptable until 2008. If the units are in use after 2008, an extra element of risk is introduced since the items are being used beyond their projected safe lifetime.

4. Conclusions. The purpose of section 4 is to present what the analyses have led the Agent to believe about the condition of the Inventory, based on the test results and analyses in section 3. These conclusions must be supported by the content of the report and should be backed by empirical evidence. Where it was necessary to make assumptions, fully document those assumptions as such, and provide the rationale supporting them.

a. Provide conclusions regarding the adequacy of the stockpile stratification in section 3.2.

b. Provide conclusions regarding the current safety, reliability and performance of the stockpile, or individual strata. If the safety or reliability is determined to be unsatisfactory, briefly summarize the test results that lead to this conclusion.

c. If trend analyses indicate that a specific end of life should be established, identify the parameter(s) whose trend leads to this conclusion. If trend analyses do not indicate that a specific end of life should be established, provide a MPSL for the stockpile, or individual strata.

d. Provide any other conclusions regarding design, storage, handling, transportation, loading, or deployment that might impact safety or reliability.

e. Provide conclusions regarding when the next IAT should occur to ensure that the stockpile is maintained in a safe and reliable condition.

Figure G-7. Ordnance Assessment Item Test Report (OAITR) Format - contd.

5. Recommendations. The purpose of section 5 is to recommend specific actions to the program office that will ensure the continued safety, reliability and performance of the system and reduce total ownership cost required to maintain the stockpile.

a. If trend analyses indicate that a specific end of life should be established, provide a recommendation to establish a service life in accordance with the predicted trend. If trend analyses do not indicate that a specific end of life should be established, provide a recommendation that a service life not be established (or remain based on RCM) at this time.

b. Provide recommendations regarding the reclassification of assets that have been determined as currently unsafe or unreliable, or are expected to degrade to an unsafe or unreliable condition in the near future.

c. Provide any other recommendations regarding design, storage, handling, transportation, loading, or deployment that might impact safety or reliability.

d. Provide recommendation regarding when the next IAT should occur to ensure that the stockpile is maintained in a safe and reliable condition.

6. Future actions. The purpose of section 6 is to inform the reader of actions that will be taken by the OA program regarding future evaluation of the test item, based on the results of this IAT.

a. Provide a summary of planned changes to test processes, stockpile stratification, or sampling process that will be instituted for future IATs, along with rationale for the changes.

7. EMS Data. The purpose of section 7 is to inform the reader of data that will be entered into the Engineering Management System (EMS) when the approved report is uploaded.

7.1 Technical Data.

7.1.1 Reliability type: Enter 1, 2 or 3.

1 - Test methods not conducive to assigning stockpile reliability.

2 - Observed reliability only: XX% - Insufficient sample size to assign confidence level.

3 - Observed reliability: XX%, Minimum reliability: XX%, Confidence level: XX%.

7.1.2 Technical status: Enter Good, Marginal or Problem.

Good - No specification failures.

Marginal - Specification failures with no impact on safety, performance or reliability or isolated failures that would cause performance degradation.

Problem - Significant specification failures with degradation of safety, performance or reliability.

Discrepancies: Required only for Marginal or Problem.

7.2 Schedule Data.

7.2.1 Year of next OA: 20XX.

7.2.2 Service life: Enter 1 or 2

1 - End-of-service life (years): XX.

2 - RCM - Minimum Predicted Service Life (MPSL - years): XX.

7.2.3 DOM (Production year of oldest units in serviceable inventory): XXXX.

7.2.4 EEOL = DOM + MPSL): 20XX.

8. References.

Figure G-7. Ordnance Assessment Item Test Report (OAITR) Format - contd.

Test Data Table					
Sample Lot Number	Test Parameter	Test Parameter	Test Parameter	Test Parameter	Test Parameter

G15.3.1 Performance or Subsequent Failure. If a condition is discovered that could lead to unsatisfactory performance or subsequent failure, the PM and OAC shall be notified in writing within 72 hours, a FRACAS report should be generated, and an Engineering Investigation (EI) should be executed to determine the source of the deficiency if required by the FRACAS process.

G15.4 Ordnance Assessment Annual Report. The OAAR is a formal document which provides a program's overall assessment. The report is reviewed by PMs to ensure OA compliance satisfies program readiness reporting requirements of the Naval Air (NAVAIR) Air Launched Weapons Team (ALWT) required for air launched weapons and serves as a review tool during the semi-annual WRR. An OAAR template is provided as Figure G-8 and located in the back of this appendix, and will include the following elements in accordance with "DOD Guide for Achieving RAM":

a. An assessment of the current condition of the inventory through test, evaluation, or engineering assessment of the safety, reliability, and performance characteristics.

b. Collection and collation of information from various data systems, such as Deficiency Reporting Website (DRWEB), Fleet Weapons Support Team (FWST) firing reports, repair data, EIs, and other operational sources regarding safety, reliability, and performance.

c. Analysis of test results and operational data to predict useful life and maintenance intervals to ensure safety, reliability, and performance.

d. Analysis of test results and operational data to identify causative factors that affect safety, reliability, and performance in the stockpile-to-target sequence. Such factors may include original design, material selection, assembly, maintenance actions, handling, storage conditions, captive-carry conditions, and interfaces with aircraft or other systems.

e. Evaluation of the effect on the weapon inventory and recommendations to the PM for actions to sustain the inventory. Evaluations will be related to specified requirements and metrics. For ordnance items in production, this may include recommendations for changes in production.

f. Prediction of the future condition of the stockpile over a period of at least three years in terms of safety, reliability, and performance.

g. Prediction of the expected service-life (end of life) in terms of safety, performance, and reliability, including the effects of aging and environmental exposure.

h. An empirical basis for planning of logistic support such as determining maintenance requirements, defining testing intervals, spares procurement, repair, and deployment limitations.

G16 Supporting Data Systems.

G16.1. Ordnance Assessment Planning Module. The OAPM is an AWIS hosted database used to generate data for OA and maintenance planning. The Module resides on both the SIPRNET and NIPRNET to provide standardized methodology for development of OA requirements and associated impacts on system readiness, maintenance cost, and inventory stockpiles. The application documents determine RCM, CBM, and AUR test quantities and projected failures, generates the program's 8-year OA/multi-year plan, provides OPOM with a program's OA drivers, and integrates with the Cognizant Maintenance Model. Unfunded requirements are carried forward and phased into out-year planning/budgeting.

OAAR ID Number

FY 20XX Annual Report
of
NAME Weapons System (or Family)

Originator of Report

Prepared by:

_____
Author

Reviewed by:

_____
First level review

Reviewed by:

_____
Second level review

Approved/Released for publication by:

_____
Approval/Release authority

Distribution Statement: As required

Destruction Notice: As required

Figure G-8. Ordnance Assessment Annual Report (OAAR) Format

EXECUTIVE SUMMARY

Test Results and Analysis

Provide a brief summary of the results presented in section 2 of the report body. Focus on the results that impact the serviceability of the stockpile. Present a summary of the analysis of overall health of the Weapons System or Family. Note any areas of concern.

Conclusions

Present the same conclusions as those in section 3 of the report body.

Recommendations

Present the same recommendation as those in section 4 of the report body.

Figure G-8. Ordnance Assessment Annual Report (OAAR) Format - contd.

1. Introduction. The purpose of section 1 is to have the reader understand the purpose of this report which is to summarize all other OA-related reports and analyses. In addition, to document any additional analyses that was made possible by bringing all of the information together.

1.1 Scope. Provide a statement specifically defining what period of information this report covers. Document the team that was responsible.

2. Test results and analyses. The purpose of section 2 is to inform the reader of specific test results and analysis of other information, such as Fleet data that were used to determine safety, reliability, and performance of the overall weapons system (or family). These analyses should be performed in accordance with section 7 of the OAITP.

2.1 OA Assessment.

2.1.1 Reliability. Summarize the results of the most recent system reliability analysis. Discuss any issues such as decreasing reliability trends and any maintenance or logistics actions needed to maintain acceptable reliability.

2.1.2 Energetic Component. Provide a short summary of recent testing of energetic items. Discuss any issues with schedule, samples or test results. Include maintenance or logistics actions that are required as a result of the OA testing.

2.1.3 Fleet information. Summarize any analysis of Fleet data including CODRs and Firing Reports. Discuss any other Fleet issues that have surfaced.

2.1.4 OA Discussion. Discuss any OA issues that are not included in the 3 areas above or any analysis that combines the 3 areas above.

2.2 Maintenance, Repair, Reporting, Data and other sources.

2.2.1 Warfighter Response Center (WRC) information. Summarize any analysis of data collected from the WRC.

2.2.2 Deficiency Reporting information. Summarize the analysis of data collected from DRWEB.

2.2.3 FWST information. Summarize the analysis of data collected from FWST or other similar functional group.

2.2.4 AUR Depot repair information. Summarize any analysis of data collected from AUR Depot repair facilities.

2.2.5 Depot Test and Repair. Summarize any analysis of data collected from Depot test and component repairs.

2.3 Data Analysis. Discuss and analyze all data from 2.1 and 2.2. Provide any action to be taken from the results of the data analyzed.

3. Conclusions. The purpose of section 3 is to summarize for the reader what has been learned or verified through the review and analysis of the efforts detailed in section 2.

a. Provide conclusions regarding the current safety, reliability and performance of the stockpile. If the safety or reliability is determined to be unsatisfactory, briefly summarize the information that lead to this conclusion.

b. Provide conclusions regarding any actions that need to be taken to monitor or rectify the problem.

4. Recommendations. The purpose of section 4 is to recommend specific actions necessary to maintain the stockpile in a safe and reliable condition and to keep the stockpile performing at the reliability needed to be effective as a Fleet asset.

Figure G-8. Ordnance Assessment Annual Report (OAAR) Format - contd.

a. Provide recommendations regarding the current safety, reliability and performance of the stockpile. If the safety or reliability is determined to be unsatisfactory, briefly summarize the information that lead to this conclusion.

b. Provide recommendations regarding any actions that need to be taken to monitor or rectify the problem.

5. References.

NOTE

The bulk of any test report should be written and coordinated through stakeholders BEFORE execution of the test program, preferably alongside the test plan, drawing heavily on previous testing and information available to the Agent. This process should significantly ease the report preparation and review process, allowing the test agent to concentrate on the data, conclusions and recommendations after the test.

Figure G-8. Ordnance Assessment Annual Report (OAAR) Format - contd.

G16.2. Engineering Management System (EMS). EMS, a module in AWIS, is a web based system used to manage and track engineering tests. OA plans, test reports, and annual report data should be entered into EMS. EMS provides the naval community with a method to manage and track surveillance test projects, baseline data input, EI tests, SIST, and AUR summary projects. The system allows users to access technical documents regarding past testing and results.

G16.3. Ordnance Inventory System (OIS). OIS is the Navy inventory system for all ordnance, providing data regarding current location and condition of ordnance items of interest.

G16.4. Other Data Systems and Models. There are several legacy program-specific data collection, modeling and analysis programs, not currently under AWIS (SLAMS, MDS, etc.) which provide data for OA programs such as: Performance data, KPPs, maintenance, configuration management, As-Built Configuration List (ABCL), Failure Mode Effects and Criticality Analysis (FMECA) databases, and other engineering data systems. The role of these data systems in the OA process should be documented in the OAPP. All such data management tools used in an OA program should be under government control. It is required within the Functional Area Manager (FAM) program that the number of data systems be reduced. An initiative is underway to consolidate ordnance program data systems. Therefore, no new software is to be developed unless it supports a wide number of systems - optimally all ordnance systems. The NOAO will work with the ordnance programs and the FAM towards the integration of data systems to meet these reduction goals while meeting the ordnance program requirements and improving the analysis capabilities for all systems at reduced costs.

G17 Reviews. Each weapon OA program shall be reviewed annually by the appropriate program office for competence and validity. The data compiled is utilized at the WRR - the semiannual forum to report the readiness of ordnance programs as well as problems encountered and to identify any additional program needs. Data is also provided to the NOMP committee per the direction of CNO (N411) and appropriate Fleet information group(s), such as the NAVAIR ALWT for presentation of air weapon systems inventory readiness, and/or other appropriate Fleet activities (SURFLANT/PAC, SUBLANT/PAC).

APPENDIX H

Explosives Safety Review, Oversight, and Verification of Response Actions Involving Military Munitions

APPENDIX H

Explosives Safety Review, Oversight, and Verification of Response Actions Involving Military Munitions

Table of Contents

Paragraph	Subject	Page
H1	Purpose	H-1
H2	Scope	H-1
H3	Background	H-1
H4	Policy	H-1
H5	Responsibility	H-2

APPENDIX H

Explosives Safety Review, Oversight, and Verification of Response Actions Involving Military Munitions

H1 Purpose. The purpose of this appendix is to provide policy, define authority and assign responsibilities for the explosive safety aspects of munitions responses.

H2 Scope. This policy applies to all Department of the Navy (DON) munitions responses that involve Munitions and Explosives of Concern (MEC) and occur at sites other than operational ranges. The exception would be a pre-existing burial site located on an operational range. The burial site would be subject to this policy while the overall operational range is not.

H3 Background. A munitions response is action taken to address explosives safety, human health or environmental risks presented by MEC which includes Unexploded Ordnance (UXO), Discarded Military Munitions (DMM) or Munitions Constituents (MC). The response may include investigation, removal and remedial action that can be as simple as implementing administrative or legal controls to preserve compatible land use (i.e., institutional controls) or as complicated as long-term response action involving sophisticated technology, specialized expertise and significant resources.

H4 Policy. Department of Defense Directive (DODD) 6055.9 and Department of Defense (DOD) 6055.9-STD requires the Navy and Marine Corps to address the explosive safety hazards associated with real property known or suspected to contain military munitions. Explosive safety hazards must be addressed prior to conducting a munitions response, changing land use to a use that is incompatible with the degree of MEC potentially present, transferring or leasing such property from DOD control. Explosives Safety Submissions (ESSs) and land disposal or transfer documentation must be submitted to the Department of Defense Explosives Safety Board (DDESB) for review and approval.

a. Chief of Naval Operations (CNO) and the Commandant of the Marine Corps (CMC) through their designated agents shall provide oversight for the implementation of munitions responses. Upon completion of these munitions responses, verify that the appropriate explosives safety actions were properly taken.

b. All munitions responses at real property known or suspected to contain MEC shall have approved plans and/or appropriate documentation in accordance with paragraph H5 and NAVSEA OP 5.

c. All explosives or munitions emergency responses (i.e., Level I and Level II as defined in CNO Ltr Ser N457F/452-98, dated July 27, 1998) involving military munitions at other than operational ranges shall be documented and forwarded to the Naval Ordnance Safety and Security Activity (NOSSA) or Marine Corps Systems Command (MARCORSYSCOM), as appropriate, to be maintained indefinitely in a explosives safety repository.

d. To the extent practical and in accordance with OPNAVINST 5090.1C and MCO P5090.2, other human health and environmental responses shall be integrated with those addressing explosives safety as required.

e. For explosive or munitions emergency responses, this policy requires that documentation of each response be provided to the appropriate Service Headquarters.

H5 Responsibility.

a. CNO.

(1) The Deputy Chief of Naval Operations (DCNO) for Fleet Readiness and Logistics (N4) shall provide overall direction and resources for DON explosive safety review, oversight and verification functions.

(2) The Supply, Ordnance and Logistics Operations Division (N41) shall administer the oversight and verification of the functions outlined in this appendix.

(3) N41 and Environmental Readiness (N46) shall program resources required for Navy activities to execute required munitions responses.

b. CMC.

(1) Deputy Commandant for Installations and Logistics (DC I&L) shall provide coordination of policy and guidance for Marine Corps munitions responses involving military munitions.

(2) Safety Division or delegated agent shall provide overall direction and resources for Marine Corps explosives safety review, oversight and verification functions.

c. MARCORSYSCOM for the Marine Corps shall:

(1) Coordinate all issues, plans and reports for munitions response with DC I&L prior to approving and forwarding to DDESB. Coordination will ensure that explosives safety, land use, remediation and other relevant issues are addressed.

(2) Develop and maintain a repository of Marine Corps explosive or munitions emergency response and munitions response notifications.

(3) Provide guidance for the preparation of ESSs for munitions responses.

(4) Provide guidance for addressing the explosives safety concerns in health and safety plan development, execution, personnel qualification and quality assessment.

(5) Review/approve ESSs and associated corrections and amendments to NOSSA for technical review and then forward to the DDESB or other entities, as appropriate.

(6) Develop an oversight and verification process addressing the implementation of explosives safety principles in munitions responses.

(7) Oversee explosive safety of ongoing munitions responses to include, at a minimum, ESS compliance, health and safety plan execution, personnel qualification and quality assessment.

(8) Review/approve ESS amendments and forward them to the NOSSA/DDESB or other entities, as appropriate.

(9) Review and approve site-specific After Action Reports (AARs), submitted by Naval Facilities Engineering Command (NAVFACENGCOM) or others, to verify that required explosives safety actions were completed in accordance with the selected response actions and associated ESSs including any ESS amendments and forward to DDESB.

(10) Respond to requests for formal verification that the final munitions action was completed in accordance with the approved explosives safety documentation.

d. Commander, Naval Sea Systems Command (COMNAVSEASYSCOM), through the NOSSA as delineated in NOSSAINST 8020.15B, shall:

(1) Develop and maintain a repository for Navy explosives or munitions emergency responses and munitions response notifications.

(2) Provide guidance for the preparation of ESSs for munitions responses.

(3) Provide guidance for addressing the explosives safety concerns in the health and safety plan development/execution, personnel qualification and quality assessment.

(4) Review/approve Navy and applicable Marine Corps submitted ESSs and forward them, when appropriate to the DDESB or other entities.

(5) Develop an oversight and verification process addressing the implementation of explosives safety principles in munitions responses.

(6) Provide explosives safety oversight of ongoing munitions responses to include, at a minimum, ESS compliance, health and safety plan execution, personnel qualification and quality assessment.

(7) Review/approve ESS amendments and forward them to the DDESB or other entities, as appropriate.

(8) Review and approve site-specific AARs submitted by NAVFACENGCOM or others to verify that required explosives safety actions were completed in accordance with the selected response actions and associated ESSs, including any ESS amendments and forward to the DDESB.

(9) Provide, as requested, formal verification that the final response action was completed in accordance with the approved explosives safety documentation.

e. NAVFACENGCOM shall, for all response actions involving military munitions for which they are responsible:

(1) Provide initial written notification of MEC discoveries to NOSSA and Commanding General (CG) MARCORSYSCOM, as appropriate.

(2) Develop ESSs for NOSSA and CGMARCORSYSCOM review and submission to the DDESB, as required.

(3) Develop safety and health plans, personnel qualification documentation and quality assessment/control procedures that address explosives safety.

(4) As appropriate, provide additional supporting information, such as legal documents, to NOSSA and CGMARCORSYSCOM.

(5) Coordinate munitions response with the appropriate Explosives Safety Officer (ESO) and when applicable, support Explosive Ordnance Disposal (EOD) personnel.

(6) Conduct munitions responses in accordance with the approved ESS.

(7) Amend, as appropriate, approved ESSs to reflect changes in the selected munitions response and submit the amendments via NOSSA and CGMARCORSYSCOM to the DDESB.

(8) Prepare AARs for the selected or amended munitions response action and provide to NOSSA and CGMARCORSYSCOM for review and submission to the DDESB or other entities, as appropriate.

(9) Prepare proposed language for deeds, activity master plans or other land use controls in collaboration with NOSSA and CGMARCORSYSCOM, as appropriate.

f. Major Commands/Claimants/Installations/Activities for all munitions responses under their cognizance shall follow the requirements of paragraph H4e.

g. Navy and Marine Corps EOD Mobile Units and Detachments shall:

(1) Submit copies of EOD incident reports for munitions or explosive emergency responses found either on or off their assigned military facility to NOSSA and MARCORSYSCOM on an annual basis by 31 March for the previous calendar year.

(2) Exclude any responses on operational ranges and all non-military munitions responses, such as those involving Improvised Explosive Devices (IEDs).

APPENDIX I

Navy Munitions Disposition Policy

APPENDIX I

Navy Munitions Disposition Policy

Table of Contents

Paragraph	Subject	Page
I1	Purpose	I-1
I2	Background	I-1
I3	Scope	I-1
I4	Definitions	I-1
I5	Assignment	I-2
I6	Policy	I-2
I7	Responsibilities	I-2

APPENDIX I

Navy Munitions Disposition Policy

I1 Purpose. This appendix defines policy, authority and responsibility for management of the Navy disposition process for excess, obsolete, unserviceable and military waste munitions generated or received at Navy activities. The disposition process includes Demilitarization (DEMIL), recycling, declassification and disposal.

I2 Background.

a. The Department of Defense (DOD) assigns the disposition of all excess materials to the Defense Logistics Agency (DLA) except for ships, military munitions and Material Potentially Presenting an Explosive Hazard (MPPEH), which has not been certified ”SAFE”. These materials are assigned to the Military Services.

b. Per DOD 5160.68, the Secretary of the Army is designated as the Single Manager for Conventional Ammunition (SMCA). SMCA is assigned responsibility for DEMIL, recycling, declassification and disposal of all munitions which include SMCA and non-SMCA items except large strategic missile rocket motors.

c. Director, Strategic Systems Programs (DIRSSPs) is responsible for Navy large strategic missile rocket motor DEMIL, reclamation, declassification and disposal. Close coordination between the Navy and SMCA is essential to assure optimal use of existing capabilities, eliminate unwarranted overlap or duplication and maintain maximum efficiency.

d. The EPA, in Subpart M of 40 CFR Part 266, specifies requirements for the management of military waste munitions. The Navy has delineated these requirements in CNO Memo SER N457F/452-98, Implementing the Environmental Protection Agency Military Munitions Rule.

I3 Scope. This appendix applies to all U.S. Navy (USN) and Marine Corps (USMC) activities that handle Navy munitions.

I4 Definitions.

a. Designated Disposition Authority (DDA): The only personnel in DOD authorized to declare unused military munitions waste except in case of an explosive or munitions emergency, abandoned munitions, or a declaration by the Authorized Military Official (AMO). Each Service has at least one DDA and may elect to have more (e.g., a DDA for a particular program or command). SMCA is the single DDA at the DOD level. DDAs are responsible for evaluating munitions that are excess to current requirements or otherwise no longer part of the active inventory for safety, other uses, resource recovery and recycle possibilities, and treatment.

b. Military munitions: All ammunition products and components produced or used by or for the U.S. DOD or the U.S. Armed Services for national defense and security, including military munitions under the control of the DOD, U.S. Coast Guard, U.S. Department of Energy (DOE), and National Guard personnel. The term military munitions includes: confined gaseous, liquid and solid propellants, explosive pyrotechnics, chemical and riot control agents, chemical muni-

tions, rockets, guided and ballistic missiles, bombs, warheads, mines, torpedoes, depth charges, cluster munitions and dispensers, demolition charges, devices and components thereof. Military munitions do not include wholly inert items, Improvised Explosive Devices (IEDs), and nuclear weapons, nuclear devices, and nuclear components thereof. However, the term does include non-nuclear components of nuclear devices, managed under DOEs nuclear weapons program, after all required sanitizing operations under the Atomic Energy Act of 1954, as amended, have been completed. See 40 CFR 260.10.

I5 Assignment. Commander, Naval Supply Systems Command (COMNAVSUPSYSCOM) is assigned authority for the worldwide management of DEMIL, recycling, declassification, disposal of excess, obsolete, unserviceable, military waste and foreign munitions generated at Navy activities with the exception of large strategic rocket motors. COMNAVSUPSYSCOM designated the Naval Supply Systems Command Global Logistics Support (NAVSUP GLS AMMO) to perform these functions as they apply to Naval conventional ordnance. DIRSSP is assigned authority for final disposition of all ordnance items under their cognizance including large strategic rocket motors.

I6 Policy. Management of excess, obsolete, unserviceable, and military waste munitions must ensure asset visibility and enhance Fleet readiness. Effective management performance includes timely identification, efficient and approved environmentally safe disposal and accurate accountability.

a. Munitions determined to be in excess, obsolete, unserviceable, and/or military waste munitions generated or received at Navy activities worldwide, shall be shipped to one of the SMCA authorized DEMIL sites as directed by the Navy DDA for conventional ordnance.

b. In accordance with OPNAVINST 5090.1C and NAVSEA OP 4, ocean dumping is prohibited and may only be authorized by the U.S. EPA and on a case-by-case basis by Chief of Naval Operations (CNO), Fleet Readiness (N43).

I7 Responsibilities.

a. Chief of Naval Operations.

(1) (CNO N41) Provide overall policy in accordance with OPNAVINST 4520.1A to COMNAVSUPSYSCOM for the Navy Munitions Demilitarization Program.

(2) (CNO N45) Ensure that all proposed changes to environmental, hazardous waste criteria, controls or processes, which could impact the Navy's Munitions Demilitarization Program are coordinated with the Navy DDAs.

b. COMNAVSUPSYSCOM responsibilities include:

(1) Developing, issuing, implementing policies and procedures for worldwide management and operations of the Navy munitions DEMIL, recycling, declassification and disposal program.

(2) Developing and submitting Navy worldwide DEMIL Program Objective Memorandum (POM). Managing budget by processing excess, obsolete, unserviceable and military waste munitions at Navy activities, with the exception of those programs associated with large strategic rocket motors. NAVSUP GLS AMMO shall manage program funds for field activities and technical organizations in support of program requirements through evaluating and minimizing program expenses.

(3) Reviewing DEMIL and disposal plans developed as part of the integrated logistics support plans for new, converted or modified Navy munitions. Development and approval of DEMIL plans will be accomplished prior to Operational Test and Evaluation (OT&E) of all new, converted or modified munitions items.

(4) Maintaining close liaison with SMCA regarding DEMIL and disposal issues.

(5) Maintaining a centralized inventory management system for Navy munitions DEMIL, recycling, declassification and disposal actions. The Naval Ordnance Information System Wholesale (OIS-W) shall provide complete asset visibility with a transaction audit trail to ensure proper accountability, management and control.

(6) Identification and confirmation of excess Navy ammunition items with program managers and their acquisition agents via the annual ordnance stratification.

(a) Support program managers/acquisition agents in the development of a 5-year forecast of ammunition DEMIL/disposal requirements based on anticipated obsolescence and projected delivery of replacement ordnance.

(b) It is an annual requirement to submit a "DEMIL 5 year forecast" to the SMCA and Joint Munitions Command (JMC) in accordance with CNO Memo Ser N457F/452-98, Implementing the EPA Military Munitions Rule.

(7) Screening items which the Navy no longer utilizes. Contact other services and Foreign Military Sales (FMS) program customers for potential use, recycling or reclamation, prior to requesting disposition from SMCA. Provide disposition instructions to munitions custodians.

(8) Assuring DEMIL, recycling, declassification, disposal of munitions and related hazardous wastes are accomplished in accordance with applicable Federal (to include host nation), State, DOD, Service explosives safety, environmental regulations, policies and directives. These processes will emphasize reduction of waste, recovery of usable parts, components and precious metals as well as maximum reuse and recycling where possible. Program operating procedures will provide specific guidance and instructions to effectively promote this policy.

(9) Develop training programs for Navy Munitions Demilitarization Program personnel.

(10) As the Navy coordinator for changes to DOD 4160.21-M-1 and DOD 4160.21-M MILSTRIP/MILSTRAP regulations, ensure that all proposed changes, which may affect excess munitions inventory management or processing are coordinated with the Navy Munitions Demilitarization Program Manager, the Navy Large Strategic Missile Rocket Motor Program Manager, and the Navy DDAs.

(11) As the lead Navy DDA, define procedures for all Navy DDAs to ensure consistency in management.

(12) Provide Transportation Account Codes (TAC) for the transportation of Navy and Marine Corps (MARCORPs) Class V(A) assets from MARCORPs activities to designated DEMIL sites in accordance with NAVSUP P-724.

c. Naval Ordnance Safety and Security Activity (NOSSA) shall develop and promulgate in accordance with NAVSEA OP 5 criteria for management and disposition of MPPEH to meet the requirements in DODI 4140.62.

d. Program Managers are responsible for development of all new, converted or modified munitions items containing energetic or other hazardous materials. They shall:

(1) Ensure that DEMIL; disposal considerations, waste characterization of residual components and design for recycling are incorporated as an integral part of the acquisition logistics planning, programming and budgetary decisionmaking processes for all new, and converted or modified munitions items in accordance with OPNAVINST 5090.1C and DODI 4140.62.

(2) Review all munitions items for which they have technical responsibility. Ensure that munitions items are properly cataloged for all DEMIL and declassification requirements. Ensure through NAVSUP GLS AMMO that Defense Logistics Services Center records are kept updated.

(3) Screen munitions items under their cognizance that are identified as potential excess munitions by the inventory managers. Intra-Navy screening of end items, subassemblies, parts and components will be accomplished prior to declaring items in excess of requirements. Program managers shall identify all requirements including recycling of parts and components to the inventory manager or provide written certification that no requirement exists.

(4) Annually provide a 5-year forecast of anticipated DEMIL requirements along with associated Service Wide Transportation (SWT) DEMIL tonnage projections to NAVSUP GLS AMMO.

e. DDAs are required by the Department of the Navy (DON) Policy to Implement the EPAs Military Munitions Rule of 1 Jul 98, CNO Memo Ser N457F/452-98 of 27 Jul 98. NAVSUP GLS AMMO is the DDA for Naval conventional ordnance assets. The NAVSUP GLS AMMO DDA is the approval authority for the DEMIL/disposal of Naval conventional owned assets. Exceptions would be specific ordnance commodities for which applicable DDAs are as follows:

(1) TOMAHAWK Missile System DDA is the Program Executive Officer (PEO) Cruise Missiles and Joint Unmanned Aerial Vehicles (CMPANDUAV).

(2) CAD/PAD DDA is the PEO Tactical Aircraft (TACAIR).

(3) Strategic Missiles DDA is Strategic Systems Program (SSP).

f. DDAs shall:

(1) Ensure adequate coordination, application and interpretation of defining criteria when munitions are classified as military waste munitions through the evaluation process contained in the DON Policy to Implement the EPAs Military Munitions Rule of 1 Jul 98, CNO Memo Ser N457F/452-98 of 27 Jul 98.

(2) Provide munitions disposition instructions for excess, obsolete, unserviceable, and military waste munitions. Munitions disposition instructions will be coordinated with appropriate entities based on the disposition involved (e.g., excess, obsolete, unserviceable or waste).

(3) Direct appropriate action (to include but not be limited to transportation, treatment, authorization to train, etc.) based on the type of instructions required.

g. Commander, Marine Corps Systems Command (COMMARCORSYSCOM) Program Manager for Ammunition (PM-AMMO) shall:

(1) Serve as the DDA for Marine Corps owned ground munitions. The Marine Corps DDA shall comply with additional guidance provided by the Marine Corps.

(2) Provide disposition instructions for assets located at Navy installations and shall provide transportation funding for those assets as required. This transfer must be consistent with procedures established by NAVSUP GLS AMMO. Navy unserviceable, obsolete, excess and waste munitions generated at Marine Corps activities must be referred to NAVSUP GLS AMMO for disposition instructions.

h. Fleet Commanders shall:

(1) Ensure that all units generating potentially excess, obsolete, unserviceable and military waste munitions obtain required coordinated disposition instructions from the appropriate DDA. Requests for disposition shall follow the process described in NAVSUP P-724.

(2) Ensure that all munitions stored at Navy activities are managed in accordance with the DON Policy to Implement the EPA's Military Munitions Rule of 1 Jul 98, CNO Memo Ser N457F/452-98 of 27 Jul 98 and NAVSUP P-801.

i. Director, SSP shall manage and administer the DEMIL, recycling, and final disposition of ordnance items under its cognizance in accordance with applicable safety, environmental and treaty requirements.

APPENDIX J

Funding Responsibility for Receipt, Segregation, Storage, and Issue (RSSI) at Navy Munitions Command (NMC) Activities

APPENDIX J

Funding Responsibility for Receipt, Segregation, Storage, and Issue (RSSI) at Navy Munitions Command (NMC) Activities

Table of Contents

Paragraph	Subject	Page
J1	Introduction	J-1
J2	Fleet Ordnance Support (FOS) Program Funded Operations	J-1
J3	Program Manager (PM) Funded Operations	J-1
J4	Cross-Service Funds	J-5
J5	Reimbursement	J-5
J6	Other Funded Operations	J-5

List of Illustrations

Figure	Title	Page
J-1	Ship Offload	J-2
J-2	Over the Road Receipt	J-3
J-3	Issue of DEMIL Material	J-4

APPENDIX J

Funding Responsibility for Receipt, Segregation, Storage and Issue (RSSI) at Navy Munitions Command (NMC) Activities

J1 Introduction. NMC is mission-funded to support Fleet tasking through Fleet Ordnance Support (FOS) program funds. This appendix establishes guidelines for the scope of ordnance operations at NMC activities that are supported by FOS program funding and identifies workload that must be funded on a reimbursable basis. These reimbursable relationships are depicted in Figures J-1 through J-3; performance of work is not authorized without a reimbursable agreement. Reductions to FOS funding controls will necessitate reduction in the scope of ordnance operations supported. All FOS funded operations are subject to reductions as directed by Fleet priorities.

J2 Fleet Ordnance Support (FOS) Program Funded Operations. FOS is mission-funded and therefore is subject to specific regulations contained within the Department of Defense (DOD) 7000.14-R, Financial Management Regulation. The FOS program funds:

a. All ordnance operations involving handling of ammunition, management of ordnance assets, logistics support, site management, administrative support, material and contract costs associated with U.S. Navy (USN), U.S. Marine Corps (USMC) and U.S. Coast Guard (USCG) conventional ammunition when the ammunition is ship fill, cargo, Opportune Lift (OPLIFT), mission, and/or training allowances not associated with on-site non-FOS funded maintenance facilities.

b. All ordnance operations required to maintain the stock point activity's stock levels of Ready for Issue (RFI) ammunition.

c. Handling of USMC (Class V (A, W)) ammunition in support of the USMC Maritime Prepositioning Forces (MPF) at NMC Continental United States (CONUS) East Division Detachment Charleston, South Carolina.

d. Segregation of Suspended - Condition Unknown (Condition Code K) 2E, 2T and 0T Cog ammunition to include correction of selected defects as specified in NAVSUP P-805 Chapter 7.

J3 Program Manager (PM) Funded Operations. Work and/or handling operations performed by NMC activities on ammunition and weapons in support of life cycle management of that asset is funded on a reimbursable basis through funds provided by cognizant ammunition program management offices. On-site, non-FOS funded maintenance facilities are activities co-located with an NMC activity, funded by program management offices that perform:

a. Manufacturing.

b. Demilitarization (DEMIL)/disposal.

c. Fabrication.

d. Assembly.

e. Maintenance including overhaul, repair, rework, renovation, modernization, and conversion.

f. Ordnance Assessment (OA).

g. Surveillance.

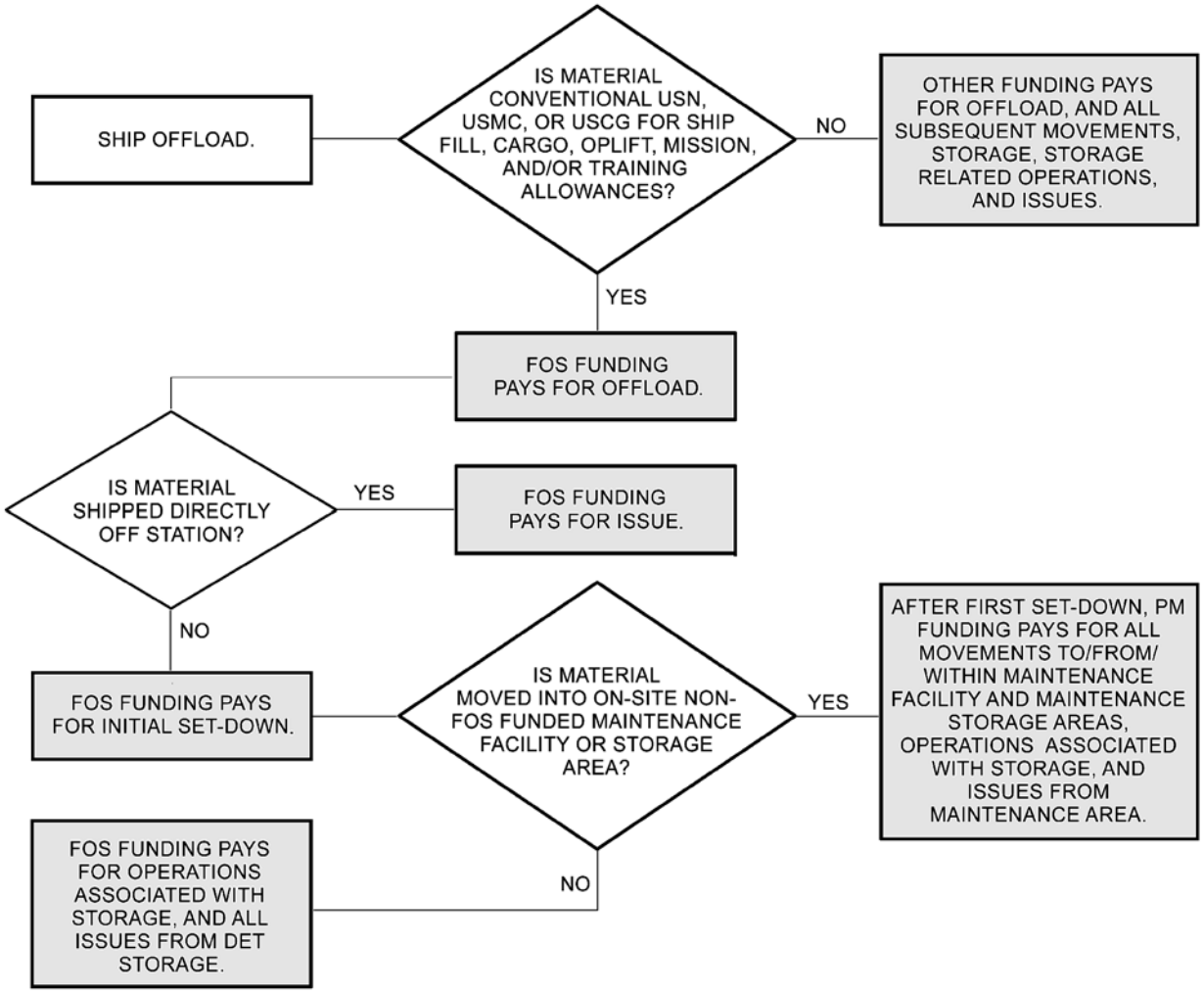

NOTES:

1. FOS funding. Operations and Maintenance, Navy (O&M,N) 1B2B funding provided to NMC activities by OPNAV N411 in support of assets owned by USN (ownership code 5), USMC (ownership code 4), and USCG (ownership code 7).
2. PM funding. Funding provided on a reimbursable basis by a program manager in support of life cycle management of an asset.
3. Other funding. Funding provided on a reimbursable basis in support of assets outside FOS or PM funding streams. Examples are RDT&E, FMS, Commercial, and others such as TURBOCADS.
4. On-site non-FOS funded maintenance facility. Includes manufacturing, DEMIL/disposal, fabrication, assembly, surveillance, OA, overhaul, repair, rework, renovation, modernization and conversion. Includes both permanent and temporary facilities on the installation. Includes operations not funded by FOS program funds, and performed by NMC or non-NMC personnel.

Figure J-1. Ship Offload

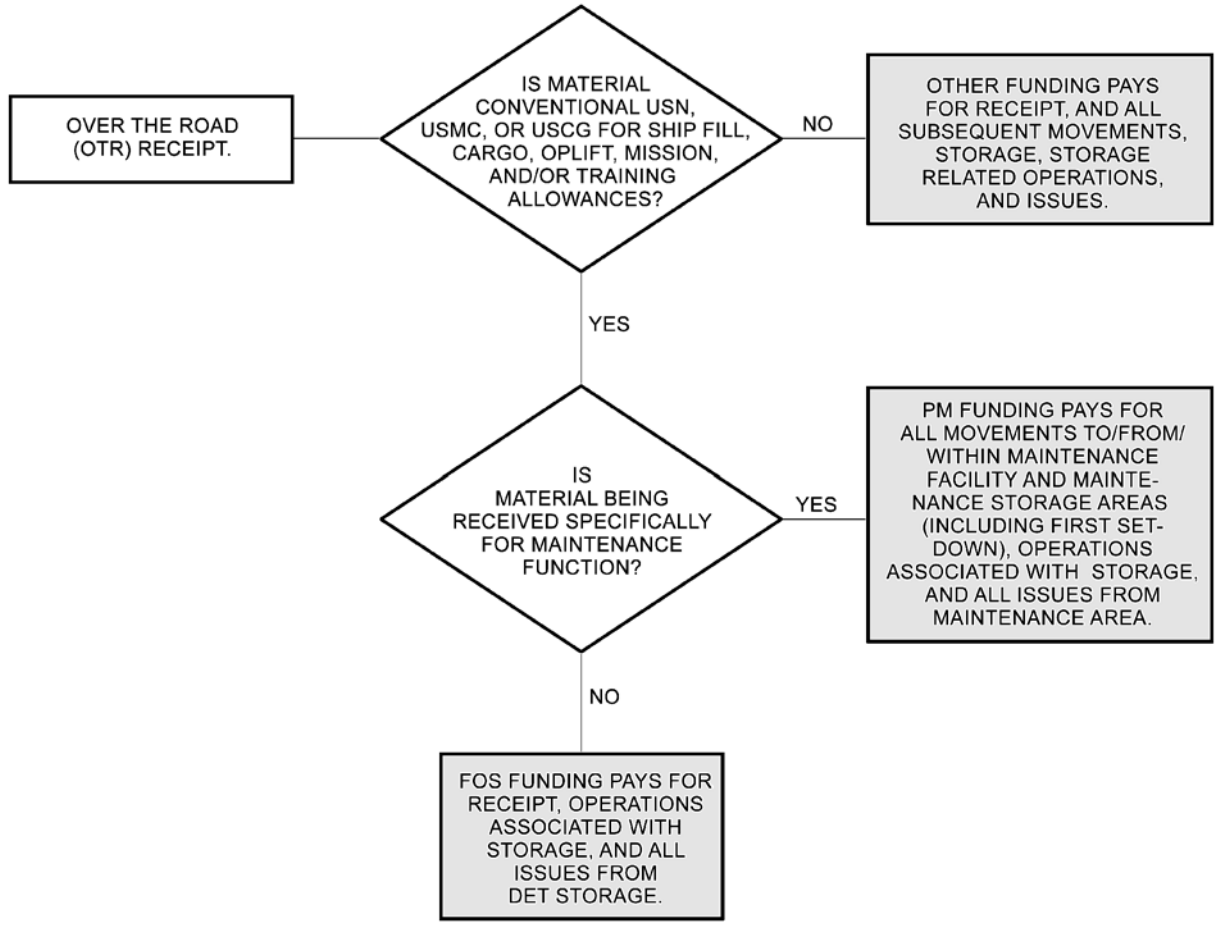

NOTES:

1. FOS funding. O&M,N 1B2B funding provided to NMC activities by OPNAV N411 in support of assets owned by USN (ownership code 5), USMC (ownership code 4), and USCG (ownership code 7).
2. PM funding. Funding provided on a reimbursable basis by a program manager in support of life cycle management of an asset.
3. Other funding. Funding provided on a reimbursable basis in support of assets outside FOS or PM funding streams. Examples are RDT&E, FMS, Commercial, and others such as TURBOCADS.
4. On-site non-FOS funded maintenance facility. Includes manufacturing, DEMIL/disposal fabrication, assembly, surveillance, OA, overhaul, repair, rework, renovation, modernization and conversion. Includes both permanent and temporary facilities on the installation. Includes operations not funded by FOS program funds, and performed by NMC or non-NMC personnel.

Figure J-2. Over the Road Receipt

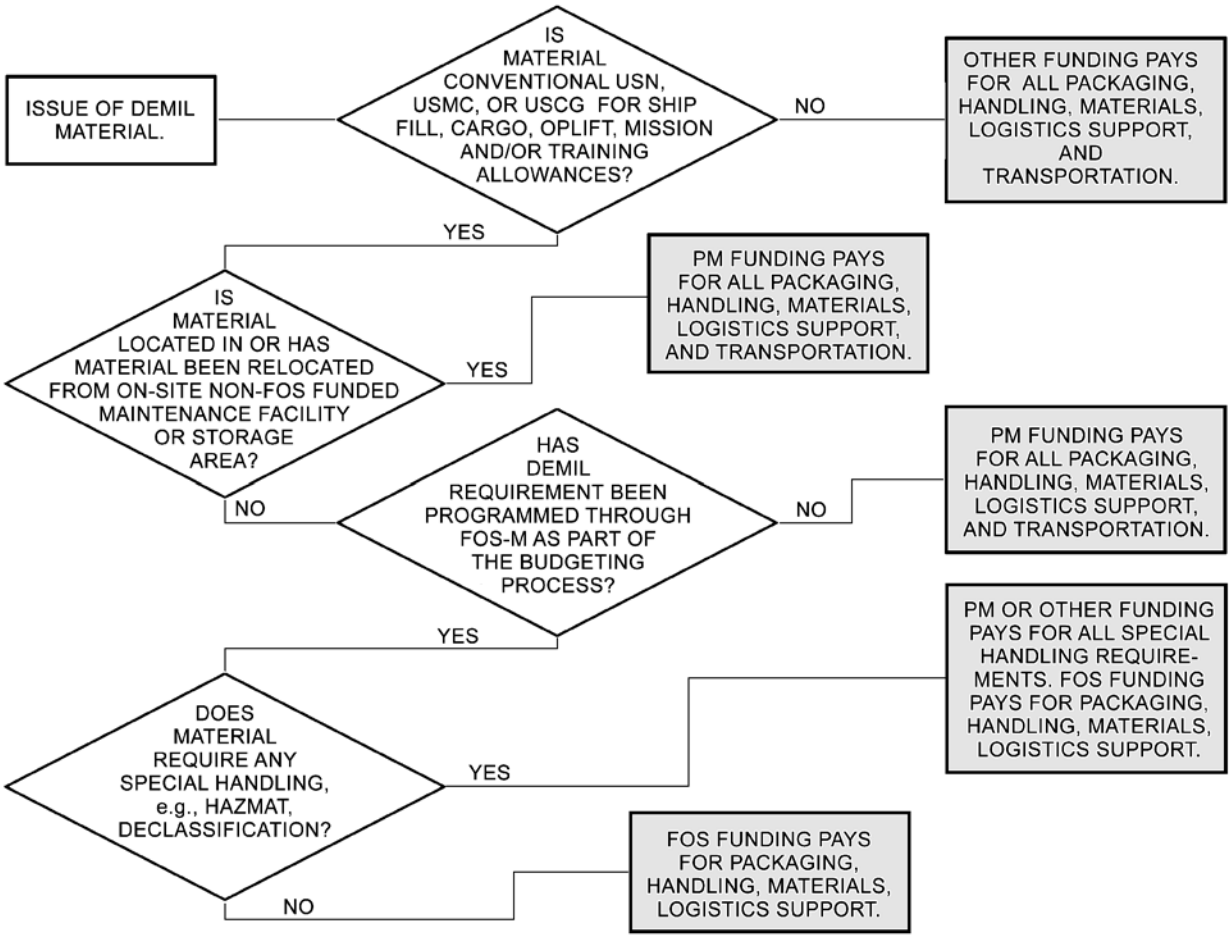

NOTES:

1. FOS funding. O&M,N 1B2B funding provided to NMC activities by OPNAV N411 in support of assets owned by USN (ownership code 5), USMC (ownership code 4), and USCG (ownership code 7).
2. PM funding. Funding provided on a reimbursable basis by a program manager in support of life cycle management of an asset.
3. Other funding. Funding provided on a reimbursable basis in support of assets outside FOS or PM funding streams. Examples are RDT&E, FMS, Commercial, and others such as TURBOCADS. Other funding for DEMIL also includes some costs for special handling, inspection and packaging paid by CNIC.
4. On-site non-FOS funded maintenance facility. Includes manufacturing, DEMIL/disposal fabrication, assembly, surveillance, OA, overhaul, repair, rework, renovation, modernization and conversion. Includes both permanent and temporary facilities on the installation. Includes operations not funded by FOS program funds, and performed by NMC or non-NMC personnel.
5. NMC East Asia Division (EAD) DET Sasebo DEMIL. Naval Supply Systems Command Global Logistics Support (NAVSUP GLS AMMO) DEMIL Program Manager pays for transportation, materials, labor, and travel requirements for NMC EAD DET Sasebo to coordinate and liaison with 83rd Ordnance Battalion, and perform DEMIL in the Pacific AOR.

Figure J-3. Issue of DEMIL Material

J4 Cross-Service Funds. Cross-service ordnance handling functions are those associated with ammunition owned by U.S. services other than USN (Ownership Code 5), USMC (Ownership Code 4), or USCG (Ownership Code 7).

a. In general, ordnance handling for other services is reimbursable workload for NMC activities. However, historically some NMC activities have performed *de minimus* cross-service workload without charge to the applicable service. In the future, NMC activities may continue to perform this minimal cross-service workload as an exception to the FOS definition in J2 above upon review and approval of the NMC Commander. To facilitate the decision-making process, Commanding Officers/Officers in Charge of the performing NMC activity should refer to J5 below and DODI 4000.19 for additional guidance. NMC must keep auditable records of such workload, and must show that the minimal workload will not interfere with accomplishment of budgeted FOS workload.

b. Pseudo FMS should be treated as the same as cross service work because the US Government retains title to the property (throughout the transportation process) and it is treated as DOD property until delivered to the consignee.

c. All other ordnance handling functions of cross-service material will be funded by cross-service funds. This includes DOD handling operations performed by NMC activities for which cross-service funds have traditionally been received and DOD handling operations not approved as *de minimus* by paragraph J4a.

J5 Reimbursement. Interservice and intragovernmental support is reimbursable to the extent that provision of the specified support for a receiver increases the support supplier's direct costs (i.e., incremental direct cost). Costs associated with common use infrastructure are non-reimbursable, except for support provided solely for the benefit of one or more tenants. Support costs that are charged to a support receiver (i.e., reimbursable cost) must be measurable and directly attributable to the receiver. Indirect costs will not be included in reimbursement charges, except those included in stabilized rates charged for Working Capital Funds (WCF) mission products and services. Suppliers of interservice and intragovernmental support are permitted to waive reimbursement from receivers who use or benefit from available support without appreciably increasing the supplier's costs (i.e., revenues would be less than the anticipated expense of billing and disbursing funds).

J6 Other Funded Operations. Ordnance operations not associated with FOS, PM, or cross-service funded operations are funded by other funding sources. Examples of this type of funding are:

a. Foreign Military Sales (FMS) Funds. Ordnance handling functions associated with ammunition purchased by foreign governments are funded by FMS funds.

b. Research, Development, Testing, and Evaluation (RDT&E) Funds. Ordnance handling functions in support of RDT&E are funded by RDT&E Funds.

c. Commercial Funds. Ordnance handling functions associated with non-U.S. Service ammunition or associated with pre-commissioned ships are funded by Commercial Funds.

d. Other Funds. Ordnance handling functions associated with other ammunition are funded by the activity requesting the service, owning the ammunition, or owning the function.

APPENDIX K

Instructions for Obtaining and Completing Forms and Records

APPENDIX K

Instructions for Obtaining and Completing Forms and Records

Table of Contents

Paragraph	Subject	Page
K1	Guidance for filling out OPNAV 8000/5, 6, 8, 9, 10, 12, 13, 14 for Air Launched Missiles	K-3
K2	Guidance for filling out OPNAV 8600/11A for Air Launched Missiles	K-6
K3	Guidance for filling out OPNAV 8600/11B for Air Launched Missiles	K-9
K4	Guidance for filling out OPNAV 8600/12 for Air Launched Missiles	K-10

List of Tables

Table	Title	Page
K-1	Forms	K-1

List of Illustrations

Figure	Title	Page
K-1	Sample WAT Message	K-13

APPENDIX K

Instructions for Obtaining and Completing Forms and Records

Table K-1. Forms

NOTE

The Navy Forms On-Line website (http://forms.daps.dla.mil) provides some forms in Portable Document Format (PDF).

FORM NO./REV. DATE	TITLE	STOCK NO.
DD 200 (1/99)	Financial Liability Investigation of Property Loss	0102-LF-011-9100
DD 250 (8/00)	Material Inspection and Receiving Report	0102-LF-986-4200
DD 626 (9/98)	Motor Vehicle Inspection	
DD 836C (7/96)	Special Instructions for Motor Vehicle Drivers	
DD 1149C (4/00)	Requisition and Invoice/Shipping Document	0102-LF-017-7900
DD 1155 (1/98)	Order for Supplies or Services Request	0102-LF-016-9900
DD 1371 (9/98)	Delivery at Stopoff Unloading Point, Consignee's Receipt for	0102-LF-013-5000
DD 1387 (7/99)	Military Shipping Label	0102-LF-004-4000
DD 1387-2 (6/86)	Special Handling Data/Certification	0102-LF-001-3877
DD 1574 (10/88)	Serviceable Tag-Material	0102-LF-014-5600
DD 1577-2 (10/66)	Unserviceable Repairable Tag-Material	0102-LF-016-0000
DD 1907 (9/99)	Signature and Tally Record	0102-LF-010-0400
DD 2332 (1/99)	Product Quality Deficiency Report Exhibit	0102-LF-007-6400
OPNAV 4790/5 (7/69)	Configuration Summary SPARROW	
OPNAV 4790/12 (8/90)	Quality Assurance Representative/Inspector Recommendation/Designation	0107-LF-010-5700
OPNAV 4790/22A (1/84)	Inspection Record	0107-LF-047-9110
OPNAV 4790/23A (1/84)	Repair/Rework Record	0107-LF-047-9118
OPNAV 4790/24A (1/84)	Technical Directives	0107-LF-047-9124
OPNAV 4790/25A (8/69)	Miscellaneous/History	0107-LF-770-3505
OPNAV 4790/27A (1/84)	Inventory Record	0107-LF-047-9137
OPNAV 4790/28A (2/01)	Scheduled Removal Component Card	0107-LF-983-5400
OPNAV 4790/29 (1/84)	Aeronautical Equipment Service Record	0107-LF-047-9145
OPNAV 4790/31A (1/84)	Equipment Operating Record	0107-LF-047-9157

Table K-1. Forms - contd.

FORM NO./REV. DATE	TITLE	STOCK NO.
OPNAV 4790/35 (8/81)	Maintenance Instruction	0107-LF-047-9177
OPNAV 4790/36A (2/01)	Work Request Customer Service	0107-LF-983-6600
OPNAV 4790/51 (8/88)	Support Equipment Custody and Maintenance History Card	0107-LF-003-3900
OPNAV 4790/52 (3/83)	Support Equipment Preoperational Record	0107-LF-770-5501
OPNAV 4790/60 (5/88)	Visual Information Display System/Maintenance Action Form	0107-LF-002-5900
OPNAV 4790/64 (5/88)	Support Equipment Transaction Report	0107-LF-001-6600
OPNAV 4790/66 (2/01)	Technical Publication Deficiency Report	0107-LF-983-7800
OPNAV 4790/80 (10/92)	SE Rework Schedule Request	0107-LF-014-9700
OPNAV 4790/102 (1/92)	USN Aviation Support Equipment Operator's License	0107-LF-012-9600
OPNAV 4790/108 (6/81)	Support Equipment Misuse/Abuse	0107-LF-047-9550
OPNAV 4790/113 (2/01)	Equipment History Record Card	0107-LF-983-1800
OPNAV 4790/136A (1/84)	Preservation/Depreservation Record	0107-LF-047-9682
OPNAV 4790/141 (12/89)	Aircraft Inspection and Acceptance Record	0107-LF-008-4600
OPNAV 8000/5 (9/09)	SPARROW Configuration Summary/Log Sheet	
OPNAV 8000/6 (9/09)	AMRAAM Configuration Summary/Log Sheet	
OPNAV 8000/8 (9/09)	HARPOON/SLAM-ER Configuration Summary/Log Sheet	
OPNAV 8000/9 (9/09)	JSOW Configuration Summary	
OPNAV 8000/10 (9/09)	HARM/AARGM Configuration Summary/Log Sheet	
OPNAV 8000/12 (9/09)	HARPOON Configuration Summary/Log Sheet	
OPNAV 8000/13 (9/09)	SIDEWINDER Configuration Summary/Log Sheet	
OPNAV 8000/14 (9/09)	SIDEWINDER 9X Configuration Summary/Log Sheet	
OPNAV 8600/11A	Maintenance Data System for Air Launched Missile Systems	
OPNAV 8600/11B	Maintenance Data System for Air Launched Missile Containers	
OPNAV 8600/12	Maintenance Data System Air Launched Missile Systems Test Equipment	
NAVAIR 4790/3 (10/90)	Maintenance Requirements Card	0102-LF-011-0400
NAVCOMPT 2275 (8/81)	Work and Services, Order for	0104-LF-702-2751
NAVSUP 1296 (8/87)	Ammunition Master Stock Record Card	0108-LF-501-2961
NAVSUP 1297 (8/87)	Ammunition Lot/Location Card	0108-LF-501-2971
NAVSUP 1356 (8/87)	Ammunition Serial/Location Card	0108-LF-501-3561
SF 368 (10/85)	Product Quality Deficiency Report (CAT II)	7540-00-133-5541
Request for FWST Technical Support/WAT Support Services		

K1 Guidance for filling out OPNAV 8000/5, 6, 8, 9, 10, 12, 13, 14 for Air Launched Missiles are as follows:

a. Complete Blocks 1 through 15 on the particular CSF that corresponds to the configuration item. Weapon types are identified by their common names in large bold letters in the upper right-hand corner of the forms. Header information in this section contains identification data and accounting information for the AUR configuration being reported.

Block/Data Element Instruction.

Block 1. Nomenclature. Enter the complete and specific designation of the AUR. For barcoded missiles this will be assigned automatically.

Block 2. Part No. Enter the part number of the AUR that is listed in Block 1.

Block 3. Serial No. Enter the serial number of the AUR just as it appears on the equipment.

NOTE

Include all prefixes, lead zeros, dashes, slant lines, alpha-characters, and suffixes. The all-up-round serial number will correspond to the serial number of the lead component. (See Volume III, Appendix C.)

Block 4. NALC. Enter the NALC for the assembled weapon. (See NAVSUP P-724). For barcoded missiles this is assigned automatically.

Block 5. UIC (Unit Identification Code). Enter the UIC of the reporting activity. See Appendix C or Assistant Secretary of the Navy (ASN) Financial Management and Comptroller (FM&C) Manual NAVSUP-1000-25 for maintenance activity UICs. For barcoded missiles this is assigned automatically.

Block 6. Job Order/Production Work Authorization. Cite the accounting job order number and production work authorization from local documentation.

Block 7. Country Code. Enter the two-character code that identifies the country of ownership or inter-service accountability for the weapon. For convenience the applicable codes are included in Volume III, Appendix C.

Block 8. Waivers. List all approved waivers by reference to request for deviation or request for waiver for the weapon.

Block 9. Configuration Date-Time. Enter the six-digit date (YYMMDD) and 24-hour time that the final configuration was completed.

Block 10. Maintenance Due Date (MDD). Enter the six-digit date (YYMMDD) that represents expiration of the routine maintenance cycle.

Block 11. Do-Not-Issue After Date. Enter the six-digit date (YYMMDD) after which there is insufficient service time remaining to justify issuing the weapon. Volume III, Appendix D provides Serviceable in-Service Time (SIST) limitations for each weapon.

Block 12. Last System Test Date. Enter the six-digit date (YYMMDD) of the last AUR test.

Block 13. Inspector Stamp. Mark this record with a quality assurance stamp after final inspections. The quality assurance inspection initials are optional.

Block 14. Telemetry (TLM) Code. For exercise or training rounds and tactical missiles with telemetry, enter the code letter if known; otherwise enter the operating frequency of the telemeter in megahertz (MHz), e.g., TLM Code ”A” or 2212.5 MHz.

Block 15. Condition Code. Enter the material condition code for the AUR in its final configuration.

NOTE

The authoritative source of material condition codes is NAVSUP P-724.

Block 16. Local Use. This space is provided for the discretionary use of the local activity.

b. Complete Blocks 17 through 23 to provide specific information on sections, major subassemblies, and components that comprise the final configuration of the AUR. For each missile type, the configuration items are listed on separate preprinted forms.

NOTE

Shaded areas of forms require no entries.

NOTE

Data for Blocks 17 through 23 are not required for AMRAAM. AMRAAM is supported as an AUR by the contractor and configurations data is maintained in the Reliability Asset Management System (RAMS). Sections and/or components are not replaceable in the Fleet and the contractor monitors all configuration items. The NAR process will be used as necessary for AURs which may have suspect section/components.

Block/Data Element Instruction.

Block 17. Nomenclature. The critical items are listed in this preprinted block by plain language name. Subassemblies are grouped under the next higher assemblies. Blank lines are provided for components not listed. For barcoded missiles this is assigned automatically.

Block 18. MK-MOD Designator. Enter the MK and MOD if applicable or other common designation for the corresponding items in Block 17. For barcoded missiles this is assigned automatically.

Block 19. Part No. Enter the part number as it appears on the equipment for the item in Block 17.

Block 20. Serial No. Enter the serial number of the item listed in Block 17 as it appears on the equipment.

NOTE

Include all prefixes, lead zeros, dashes, slant lines, alpha-characters, and suffixes. The AUR serial number will correspond to the serial number of the lead component. (See Volume III, Appendix C.)

Block 21. Lot Number. Enter the lot number associated with the explosives or propulsion components or sections as recorded on the hardware.

NOTE

When recording lot numbers, include all prefixes, lead zeros, dashes, slant lines, alpha-characters and suffixes. Where lot number data does not apply, the spaces have been filled with crosshatch.

Block 22. Load Cure/Mfg. Date. In the spaces provided, enter the date(s) as they appear on the items in Block 17: manufacturing date, or the load/cure date for explosive and propellant material.

Block 23. Warranty Expiration. Date. In the space provided, enter the expiration date (YYMMDD) of the warranty for the item listed in Block 17.

NOTE

Translate the dates for block 23 as they appear into the year-month-day format (i.e. 870803). Where month or day does not appear, enter zeros for the missing month/day (i.e. 870000 or 860200).

c. Additional data is required for the unique requirements for the HARM/AARGM missile and HARPOON missile body configurations only. The configuration summaries for these items require that data be entered as follows:

HARM/AARGM Missile ETI Reading.

Block 24. Guidance Section Meter. Information to be provided by the manufacturer only.

Block 25. Control Section Meter. Information to be provided by the manufacturer only (inside meter).

Block 26. Captive Flight Meter. Enter the time in hours that is indicated by the captive flight meter at the time of final configuration (outside meter only).

HARPOON Missile Body.

Block 24. Oil Level. Record the oil level (cc) at the turbojet engine bearing oil reservoir.

Block 25. Date of Check. Enter the date of the oil level check in (YYMMDD) format.

d. Each type of configuration summary provides data blocks for listing any alterations or TDs that affect the configuration history. Enter the following data for each change AWC and inspection AWB accomplished or verified:

Block 17. Nomenclature. Select the appropriate nomenclature. If the item does not appear in the preprinted list, use a common, plain language name.

Block 19. Part Number. Enter the part number that is associated with the item. Alteration/Technical Directive performed. Enter the numbers assigned by AWC or AWB for the items listed in this section.

NOTE

The combined short OPNAV 8000/8 HARPOON/SLAM-ER CSF was created to cut down on the size of the logbooks for the HARPOON and SLAM-ER missiles. This is the only missile configuration to be put in the HARPOON and SLAM-ER missile log books. The standard five-page OPNAV 8000/12 HARPOON CSF will still need to be filled out. Sub-launched HARPOON missiles may require the full five-page configuration form. The five-page configuration forms are for local use and must be sent to NAVAIRWARCENWPNDIV (Code 684200E) for inclusion into the AWARS database. As barcode data collection is instituted for HARPOON and SLAM-ER missiles at the shore maintenance activities, the new OPNAV 8000/8 HARPOON/SLAM-ER short form will be automatically generated and printed from the information collected on the five-page OPNAV 8000/12 HARPOON CSF. HARPOON Exercise missiles require the full 5-page CSF in the logbook.

K2 Guidance for filling out OPNAV 8600/11A for Air Launched Missiles are as follows:

a. Complete Blocks 1 through 10 to provide essential identification information, the associated Job Control Number (JCN), and labor distribution data according to the following specific instructions.

Block/Data Element Instruction.

Record Count. Leave this blank.

Block 1A. UIC (Unit Identification Code). Enter the UIC of reporting activity. See Navy Comptroller (NAVCOMPT) Manual NAVSO P-1000-25 for maintenance activity UICs.

Block 1B. Date. Enter the six-digit date (YYMMDD) when the job is assigned. For barcoded missiles this will be assigned automatically.

Block 1C. SER (Serial Number). Enter the locally assigned five-digit number for each separate job. The first two digits of the serial number identifies the missile type; e.g., 02 represents SIDEWINDER; Appendix C provides JCNs by serial number and lead component. For 01 through 09, enter the lead zero. For barcoded missiles this will be assigned automatically.

Block 1D. SUF (Suffix). Enter an alpha-character to identify sub-jobs under one JCN. If none, enter a dash (-). This field is left blank for barcoded missiles.

NOTE

In Block 1A, the UIC is used to identify maintenance activities or ordnance stock points instead of organization code as was formerly used.

Original Item Configuration.

Block 2. Nomenclature. Enter the common language name for the item in maintenance and the common or usual designation, such as MK and MOD or Joint Electronic Type Designation System (JETDS). (See MIL-STD-196E). For barcoded missiles this will be assigned automatically.

Block 3. Part No. Enter the part number of the item in maintenance as it appears on the equipment. For barcoded missiles this block is left blank.

Block 4. Serial No. Enter the serial number of the item in maintenance as it appears on the equipment. For barcoded missiles this is an assigned number for tracking in the database.

NOTE

Include all prefixes, lead zeros, dashes, slant lines, alpha-characters, and suffixes. If the item is an AUR, the serial number will correspond to the serial number of the lead component. (See Volume III, Appendix C.)

Block 5. Job Order No./Work Request No./Ownership. Data entry is used for accounting by job order or work request number and ownership. To record ownership, enter the name of the owning service as Navy, Air Force, Army, or Foreign Military Sales (FMS). In the case of FMS assets, record the country code listed in Volume III, Appendix C.

Block 6. Local Use. This space is provided for the discretionary use of the local activity.

Block 7. Units. Enter the number of units being reported.

Block 8. Man-hours. Enter the labor-hours required for the job in hours and tenths of hours.

Block 9. Test Equipment Designation. Enter the missile support equipment designation as it appears on the equipment in the first space in Block 9. If a non-test maintenance action is being reported, enter a dash (-).

Block 10. Test Equipment Serial Number. Enter the corresponding serial number in the first space in Block 10. If more than one test equipment is used, continue to record the corresponding designations and serial numbers in successive spaces. If a non-test maintenance action is being reported, enter a dash (-).

b. Complete Blocks 11 through 25 to provide specific information about the item in maintenance, and the action being reported.

Block/Data Element Instruction.

NOTE

The Navy Ammunition Logistics Code (NALC) column is not numbered and is provided as an informational block. Entering data in this column is optional.

Block 11. Date. Enter the six-digit date (YYMMDD) when a maintenance action is performed. For barcoded missiles this is assigned automatically.

Block 12. Time of Day. Enter local 24-hour time when a reported maintenance action is performed. For barcoded missiles this is assigned automatically. Care should be taken to scan maintenance actions when they are performed.

Block 13. OPRN (Operation). Enter the operation code that identifies the reported maintenance action. Appendix C provides operation codes for reportable maintenance actions.

Block 14. TE BLK LTR (Test Equipment Block Letter). Enter the letter from Block 9 that identifies the test equipment used in a test; no entry required for a non-test maintenance action.

Block 15. Nomenclature. Enter the common name or designation by MK and MOD or JETDS. For barcoded missiles this is assigned automatically.

Block 16. Part No. Enter the part number that identifies the missile, section, or component for which maintenance is reported. Also include spares and repair parts in this block in order to provide the capability to collect failure data for reprovisioning and budgeting.

Block 17. Serial No. Enter the serial number of the item in Block 16 for all tests and inspections and for all items removed or installed.

NOTE

When recording serial numbers, include all prefixes, lead zeros, dashes, slant lines, alpha-characters, and suffixes. For non-serialized units or unreadable serial numbers, enter a dash (-). For non-serial and non-lot number units reported by quantity, enter the number of units.

Block 18. SRCE Code (Source Code). Enter the code that identifies the specific origin of the unit under repair or test. Appendix C provides source codes which describe Fleet returned and non-Fleet returned assets. For Fleet returned assets this code will correspond to the missile sentencing inspection tag (if present).

Block 19. Lot No. Enter the lot number associated with the explosive or propulsion components or sections as recorded on the hardware.

NOTE

When recording lot numbers, include all prefixes, lead zeros, dashes, slant lines, alpha-characters, and suffixes.

Block 20. Test Times. For non-test operations, enter a dash (-) in Block A. For test operations, record the duration of time that external power is applied to the nearest minute in Block A (T1). If the weapon system has an Elapsed Time Indicator (ETI) in Block B (T2), enter the ETI reading at the beginning of the test (hours). In Block C (T3), enter the ETI reading at the completion of tests (hours). Leave Blocks B (T2) and C (T3) blank except as shown below:

HARM:

Block B (T2). Record data for every operation except Remove/Install of Guidance, Warhead or Rocket Motor Sections.

NOTE

Three-character result codes as contained in Volume III, Appendix C will replace the previously used alpha/numeric symbols.

Block 21. Result Code. Enter the test result code using the coding procedures defined in Volume III, Appendix C.

Block 22. Present COND Code (Condition Code). Enter the material condition code of the unit at the time a maintenance action is recorded.

NOTE

The authoritative source of material condition codes is NAVSUP P-724 with most recent changes.

Block 23. DISP (Disposition). Enter the reporting code that describes the process for disposition of the missile or section after maintenance. Appendix C provides accurate disposition codes.

Block 24. Technical Directives Applied. Enter the directed AWCs, AWBs, NARs or required inspections accomplished or verified during maintenance (i.e., AWB-301, AWC-264). Only one entry allowed per line.

Block 25. Failure Category Codes. Enter an abbreviated failure notation and explain failure symptoms in the narrative section. Appendix C assigns failure codes and provides additional instructions for completing this block.

NOTE

Failure category codes as contained in Appendix C will be used in place of the former failure symptom codes that are unique to each missile type.

c. Spaces provided at the bottom of the form are for supplementary narrative. To elaborate on the maintenance information contained in a single line entry in the body of the form, repeat the date and time entry for that line, then enter the narrative. This will frequently be required to provide sufficient information concerning failure category codes.

K3 Guidance for filling out OPNAV 8600/11B for Air Launched Missiles are as follows:

Block/Data Element Instruction.

Record Count. Leave this blank.

NOTE

Blocks 1A through 1D (Action activity JCN identification).

Block 1A. UIC (Unit Identification Code). Enter the UIC of reporting activity. See NAVCOMPT Manual NAVSO P-1000-25 for maintenance activity UICs.

Block 1B. Date. Enter the six digit date (YYMMDD) when the job is assigned.

Block 1C. SER (Serial Number). Enter the locally assigned five digit number for each separate job. The first two digits of the serial number identifies the missile type; e.g. 07 represents HARPOON; Appendix C provides JCNs by serial number. For 01 through 09, enter the lead zero.

Block 1D. SUF (Suffix). Enter an alpha character to identify sub-jobs under one JCN. If none, enter a dash (-).

Block 2. Nomenclature. Enter the common language name (i.e. Container) for the item in maintenance and the common or usual designation (e.g. MK and MOD or CNU).

Block 3. Part No. Enter the part number of the container in maintenance as it appears on the container.

Block 4. Serial No. Enter the serial number of the container in maintenance as it appears on the container or enter ”BATCH” when reporting multiple container serial numbers on any one form.

Block 5. Job Order No./Work Request No./Ownership. Data entry is used for accounting by job order or work request number and ownership. To record ownership, enter the name of the owning service as Navy, Air Force, or FMS. In the case of FMS assets, record the country code listed in Appendix C.

Block 6. NALC. Enter the NALC of the empty container(s) if known.

Block 7. Man-hours. Enter the labor hours required to perform the jobs described on the form in hours and tenths of hours.

Block 8. Condition Code. For each container reported on the form (maximum 3 containers serial numbers per form), enter the container serial number, the starting container condition code (i.e. prior to performance of maintenance actions), the ending container condition code (after all maintenance actions reported are complete) and the container disposition code.

Block 9. Date. Enter the six-digit (YYMMDD) when each maintenance action is performed on the container.

Block 10. Cntr. Enter the container (A, B, or C from Block 8) that each maintenance action is being performed on.

Block 11. Line Item. Enter a sequential line number for each maintenance action performed starting with 001 (e.g. 001, 002, 003...).

Block 12. Maintenance Action Performed. Enter an ”X” in the appropriate box for parts replacement, subassembly/component repair, or the number of a TD accomplished.

Block 13. Nomenclature. Enter the item name of the subassembly or component being replaced or repaired.

Block 14. Part Number. Enter the part number of the subassembly/component being replaced or repaired.

Block 15. Qty. Enter the quantity of the component/ subassembly being replaced or repaired.

Block 16. Repair. Enter an ”X” in the appropriate box for the type of repair performed (i.e. Weld, Patch, Paint, or Other). If ”Other”, expand upon the type of repair performed in the narrative block at the bottom of the form. Also, enter the area/zone of the subassembly/component undergoing repair (e.g. ”Fwd left corner”, ”Left Side”, ”Fwd Cross Member”, etc.). Again, utilize the narrative block at the bottom of the form to expand upon the area/zone of the repair.

Block 17. Test Results. Enter a ”P” for Pass or ”F” for fail for all applicable container tests.

Narrative. Spaces provided at the bottom of the form are for supplementary narrative. This space should be used to elaborate on container repairs that don’t fall under Weld, Patch or Paint; to elaborate on the area/zone of a specific subassembly/component requiring repair; or to expand upon failure symptoms noted during maintenance. Each narrative should be tied to a maintenance action entered on the form above via the Date and Line Item blocks.

K4 Guidance for filling out OPNAV 8600/12 for Air Launched Missiles are as follows:

a. Complete Blocks 1 through 6 to identify the specific test equipment being reported and to provide job accounting data.

Block/Data Element Instruction.

Record Count. Leave this blank.

Block 1. Action Activity JCN. Enter the 17-digit alpha/numeric identification as follows:

Block 1A. UIC (Unit Identification Code). Enter the five-digit UIC of the reporting activity. See Volume III, Appendix C or NAVCOMPT Manual NAVSOP-1000-25 for maintenance activity UICs.

Block 1B. Date. Enter the six-digit date (YYMMDD) when job is assigned.

Block 1C. SER (Serial Number). Enter the locally assigned five-digit number for each separate job. The first digit of the serial number will always be 01 to indicate a test equipment maintenance action.

Block 1D. SUF (Suffix). Enter an alpha-character to identify sub-jobs under one JCN. If none, enter a dash (-).

NOTE

In Block 1A the UIC is used to identify maintenance activities or ordnance stock points instead of organizational code as was formerly used.

Block 2. Nomenclature. Identify the test equipment as listed in the nomenclature table in Volume III, Appendix C.

Block 3. Part Number. Enter the part number of the test equipment as it appears on the identification decal or custody record.

Block 4. Serial No. Enter the test equipment as it appears in the equipment records.

NOTE

Includes all prefixes, lead zeros, dashes, slant lines, alpha-characters, and suffixes.

Block 5. Local Use. This space provided for the discretionary use of the local activity.

Block 6. Job Order No./Work Request No./Ownership. Enter the data for accounting by job order or work request number and ownership. To record ownership, enter the name of the owning service as Navy, Air Force, or Army, or identify ownership as FMS. In the case of FMS assets, do not record the FMS case number. See NAVSUP Publication 409, Inventory Segmentation.

b. Complete Blocks 7 through 19 to record information on each maintenance and calibration action performed on the item of test equipment identified in Block 2.

Block/Data Element Instruction.

Block 7. START Operation (OPRN). In Block 1A, enter the (YYMMDD). In Block 1B, enter the 24-hour time of day that maintenance began.

Block 8. OPRN. Enter the operation code that identifies the reported maintenance action. Appendix C provides operation codes for reportable maintenance actions.

Block 9. Nomenclature. Enter the common plain language name that identifies the assembly, subassembly, or component involved in the maintenance action.

Block 10. Part No. Enter the part number of the item identified in Block 9 as it appears on the equipment or as listed in the Illustrated Parts Breakdown.

Block 11. Serial No. Enter the serial number of the item in Block 9 for all tests, inspections, and for all items removed or installed. Use separate line entries to record removal and installation.

NOTE

When recording serial numbers, include all prefixes, lead zeros, dashes, slant lines, alpha-characters, and suffixes. For non-serialized units or unreadable serial numbers, enter a dash (-).

Block 12. SRCE Code (Source Code). Enter the code that identifies the specific origin of replacement parts used in maintenance. Volume III, Appendix C provides applicable source codes.

Block 13. FSCM/CAGE (Federal Supply Code for Manufacturers)/(Commercial and Government Entity). Enter the FSCM for the item identified in Block 9. (See DLA Cataloging Handbook H2, CAGE Sections A and B.)

Block 14. OPRN TIME/Man-hours. Enter the total time required in hours and tenths of hours to accomplish the operation identified in Block 8.

Block 15. Result. Enter the reporting code that corresponds to the result of inspection. Volume III, Appendix C provides test and inspection result codes.

Block 16. Status. Enter the reporting code that indicates the status of the test equipment at the completion of the operation reported in Block 8.

Block 17. Present Condition Code. Entry of data is not required.

Block 18. DISP (Disposition). Enter the reporting code that describes the process for disposition of items of support test equipment after maintenance. Volume III, Appendix C provides applicable disposition codes.

Block 19. Failure Category Codes/(Defect Codes). Enter an abbreviated failure notation and explain failure symptoms in the narrative section. (See Failure Category Codes Volume III, Appendix C).

c. Spaces provided at the bottom of the form are for supplementary narrative. To elaborate on the maintenance information contained in a single line entry in the body of the form, repeat the date and time entry for that line, then enter the narrative. Do not repeat the information that is provided in the data fields in the narrative block. This space provides up to 25 characters of information. For example, if the test equipment fails self test then annotate the program reference number (s) that fails. Do not record failed P-codes in this block.

```
ROUTINE

DATE/TIME GROUP (DTG)

FM AIRWING OR SQUADRON

TO  NAVAIRWARCENWPNDIV CHINA LAKE CA //674000D//670000D//

INFO COMNAVAIRFOR SAN DIEGO CA//N40A//
     LOCAL TYCOM //NXX//

CNO WASHINGTON DC //N411//

COMNAVAIRSYSCOM PATUXENT RIVER MD (UC)

PEOSTRKWPNSUAVN PATUXENT RIVER (UC)

COMNAVAIRSYSCOM PATUXENT RIVER MD //6630000//

YOUR AIR WING (IF FROM A SQUADRON)

YOUR MAG (IF FROM A SQUADRON)

YOUR SQUADRONS (IF FROM AIR WING)

COMSTRKFIGHTWING (LANT OR PAC) //ORD//

UNCLAS //N08011//

MSGID/GENADMIN/UNIT//

SUBJ/WEAPONS ASSIST TEAM (WAT) REQUEST

REF/A/OPNAVINST 8000.16D

ANPM/REF A PROVIDES INSTRUCTIONS FOR REQUESTING FWST
SUPPORT//POC/NAME/RANK/COMMAND/TEL#/COMM. & DSN

RMKS/1. IAW REF A, REQUEST FWST REPRESENTATIVE FOR (THE EVENT IE.
COMPTUEX, ONBOARD CVN MISSILE EXERCISE, DESERT TALON, ETC.)
            A. QUANTITY AND TYPE WEAPONS
            B. TYPE SERVICE REQUESTED (IE. F-18, H-60, AV8B, ETC.)
            C. DATES ASSISTANCE REQUIRED
            D. LOCATION OF REQUESTED ASSISTANCE
            E. (OPTIONAL) GOVAIR, NON-AVAIL/QTRS NOT OBTAINED FOR FWST
```

Figure K-1. Sample WAT Message

APPENDIX L

Record of Changes and Interim Changes

APPENDIX L

Record of Changes and Interim Changes

Receipt Control Number	Change Recommendations	Incorporated in OPNAV M-8000.16		
		I	II	III
RCN 07-003	Change of Reporting Times	X		
RCN 07-009	Amphibious Change		X	
RCN 08-002	FWST	X		
RCN 08-003	AARGM	X	X	X
RCN 09-005	RAM	X	X	X
RCN 09-006	HAZMAT	X	X	X
RCN 09-007	Bomb Fuzes		X	X
RCN 09-008	SWIT	X		
RCN 09-009	NMC	X	X	X
RCN 09-011	Targets		X	X
RCN 09-012	Gun Systems		X	
RCN 09-013	JSOW	X	X	X
RCN 09-014	AIM-9X	X	X	X
RCN 09-015	SLAM-ER	X	X	X
RCN 09-017	AMRAAM	X	X	X
RCN 09-018	Harpoon		X	X
RCN 09-020	Maverick	X		
RCN 09-021	Organizational Fleet Sentencing and Training		X	
RCN 09-022	Sparrow	X	X	X
RCN 09-023	AWIS	X		
RCN 09-030	CNATTU	X	X	X
RCN 10-001	Support Equipment Recommendation Data (SERD)		X	
RCN 10-004	JDAM/LJDAM/DMLGB Tail Kits	X	X	

Interim Change Number	Interm Change Recommendations	Incorporated in OPNAV M-8000.16		
		I	II	III
ICN 07-001	Bomb System			X
ICN 07-004	Sidewinder 9X	X	X	
ICN 07-005	JDAM Captive Carry Reporting	X		
ICN 07-006	Airborne Electronic Countermeasures		X	X
ICN 07-008	Bombs		X	X
ICN 08-004	LJDAM incorporation	X	X	X
ICN 08-006	HARM AGM-88BC			X
ICN 09-001	AWIS TD	X		
ICN 09-002	AECM		X	X
ICN 09-003	Firing Reporting System	X		X
ICN 09-024	Sidewinder			X
ICN 09-025	JDAM/LJDAM	X	X	
ICN 09-026	FWST	X		X
ICN 09-027	NMC			X
ICN 09-028	AAE	X	X	
ICN 10-002	FMU-139B/B Fuze Shelf Life			X
ICN 10-003	AIM-9X Captive Carry Reporting	X		
ICN 10-005	Ordnance Assessment Appendix G			X
ICN 11-001	Shelf Life Extension for FMU-140A/B			X
ICN 11-002	Shelf Life Extension for FMU-143E/B			X
ICN 11-003	Addition of BLU-129/B		X	X

APPENDIX M

Acronyms

APPENDIX M

Acronyms

A&E - Ammunition and Explosive

A/C - Aircraft

AA&E - Arms, Ammunition and Explosives

AAA - Army Ammunition Activity

AAB - Aviation Armament Bulletin

AAC - Aviation Armament Change

AAE - Aircraft Armament Equipment

AAF - Activity Address File

AAO - Approved Acquisition Objective

AAO - Authorized (or Approved) Acquisition Objective

AAP - Army Ammunition Plant

AAR - After Action Report

AARGM - Advanced Anti-Radiation Air-to-Ground Missile

AAW - Anti-War Warfare

ABCL - As-Built Configuration List

ABF - Annular Blast Fragmentation

ABFC - Advance Base Functional Component

ABIOL - Advanced Base Initial Outfitting List

ABMS - Ammunition Budget Management System

ABSLA - Approved Basic Stock Levels of Ammunition

ACAT - Acquisition Category

ACB - Amphibious Construction Battalion

ACC - Activity Classification Code

ACC - Air Combat Command

ACC - Aircraft Controlling Custodian

ACD - Allocated Configuration Documentation

ACE - Aviation Combat Element

ACES – Automated Captive Carry Entry System

ACF – Aerodynamic Control Fins

ACI – Allocated Configuration Identification

ACMDS – Automated Configuration Management Data System

ACO – Administrative Contracting Officer

ACPINS – Automated Computer Program Identification Number System

ACR – Ammunition Condition Report

ACSW – Airborne Crew Served Weapons

AD – Destroyer Tender

AD&C – Ammunition Distribution and Control

ADC – Ammunition Data Card

ADCAP – Advanced Capability

ADIMS – Ammunition Disposal Inventory Management System

ADL – Ammunition Data List

ADM – Acquisition Decision Memorandum

ADP – Automated Data Processing

ADRA – Ammunition Disposition Request and Authorization

AE – Ammunition Ship

AEA – Acquisition Engineering Agent

AECA – Arms Export Control Act

AEDA – Ammunition, Explosives and other Dangerous Articles

AEL – Allowance Equipage List

AEPS – Aircrew Escape Propulsion System

AESR – Aeronautical Equipment Service Record

AETC – Air Education and Training Command

AFAO – Approved Force Acquisition Objective

AFB – Air Force Base

AFFF – Aqueous Film Forming Foam

AFMC – Air Force Materiel Command

AFOTEC – Air Force Operational Test and Evaluation Center

AFP – Approved for Full Production

AFS - Combat Stores Ship

AGM - Air to Ground Missile

AGS - Aircraft Gun System

AHE - Armament Handling Equipment

AIE - Acceptance Inspection Equipment

AIG - Address Indicator Group

AIM - Air Intercept Missile

AIMD - Aircraft Intermediate Maintenance Department

AIN - Ammunition Information Notice

AIR KIT - Air Launch Kit

AIRS - Aircraft Inventory Reporting System

AIS - Automated Information System

AIT - Automated Identification Technology

AL - Acquisition Logistician

ALC - Air Logistics Center

ALE - Air Launched Expendable

ALM - Air Launch Missile

ALMDS - Airborne Laser Mine Detection System

ALMS - Air Launched Missile System

ALN - Ammunition Lot Number

ALP - Approved for Limited Production

ALSP - Acquisition Logistics Support Plan

ALSS - Aviation Life Support System

ALWT - Air Launched Weapons Team

AMAR - Ammunition Management and Accountability Review

AMAT - Ammunition Management and Accuracy Team

AMC - Air Mobility Command

AMC - Army Materiel Command

AMC - U.S. Army Material Command

AMCCOM - U.S. Army Munitions and Chemical Command

AMCM - Airborne Mine Countermeasure

AMHAZ – Ammunition and Hazardous Materials

AMMO – Ammunition Management Office

AMMRL – Aircraft Maintenance and Material Readiness List

AMNS – Airborne Mine Neutralization System

AMO – Authorized Military Official

AMPRS – Ammunition Maintenance Progress Reporting System

AMRAAM – Advanced Medium Range Air-To-Air Missile

AMRAD – Armament/Munitions Requirements and Development

AMTCS – Aviation Maintenance Training Continuum System

ANSI – American National Standards Institute

AO – Aviation Ordnanceman

AoA – Analysis of Alternatives

AOC – Army Operations Center/Aviation Ordnance Chief

AOCM – Master Chief Aviation Ordnancemen

AOCS – Senior Chief Aviation Ordnancemen

AOE – Fast Combat Support Ship

AOOCP – Aviation Ordnance Officer Career Progression

AOR – Area of Responsibility

AOR – Replenishment Oiler

AORR – Aviation Ordnance Readiness Review

AOSA – Aviation Ordnance Safety Assessment

AOTD – Active Optical Target Detector

AP – Acquisition Plan

AP/CAN – Capsule/Canister

APA – Appropriation Purchase Account

APAR – Active Phased Array Radar

APB – Acquisition Program Baseline

APB – Advanced Processing Build

APDF – Aircraft Program Data File

APE – Ammunition Peculiar Equipment

APFSDS-T – Armor Piercing Fin Stabilized Discarding Sabot Tracer

APKWS – Advanced Precision Kill Weapon System

APL – Allowance Parts List

APM – Acquisition Program Manager

APML – Assistant Program Manager for Logistics

APMS&E – Assistant Program Manager for Systems Engineering

APN – Aircraft Procurement, Navy

AQL – Acceptable Quality Level

AR – Asset Readiness

ARDEC – Army Research, Development and Engineering Command

ARM – Anti-Radiation Missile

ARO – Acquisition Review Office

ARO – Asset Readiness Objective

ARR – Allowance Requirements Register

AS – Assembly

AS – Submarine Tender

ASAALT – Assistant Secretary of the Army, Acquisition Logistics and Technology

ASAPP – Armament Systems Automated Production Plan

ASC – Airborne Software Change

ASCM – Anti-Ship Cruise Missile

ASD – Assistant Secretary of Defense

ASE – Armament Support Equipment

ASM – Anti-Ship Missile

ASN – Assistant Secretary of the Navy

ASN (FM&C) – Assistant Secretary of the Navy (Financial Management and Comptroller)

ASN/RDA – Assistant Secretary of the Navy for Research, Development, and Acquisition

ASR – Assembly Service Record

ASROC – Anti-Submarine Rocket

ASRP – Ammunition Stockpile Reporting Program

ASUW – Anti-Surface Unit Warfare

ASW – Anti-Submarine Warfare

AT – Avionics Technicians

AT&L – Acquisition Technology and Logistics

ATAC – Advanced Traceability and Control

ATE – Automatic Test Equipment

ATO – Aircraft Transfer Order

ATP – Allied Technical Publication

ATR – Ammunition Transaction Report

ATS – Acoustic Tracking System

ATS – Automated Test Sets

AUR – All-Up-Round

AUTODIN – Automatic Digital Network

AUTOSERD – Automated Support Equipment Recommendation Data

AV-3M – Naval Aviation Maintenance and Material Management

AVCAL – Aviation Consolidated Allowance List

AVDLR – Aviation Depot Level Repairables

AWARS – Airborne Weapon Analysis and Reporting System

AWB – Airborne Weapon Bulletin

AWC – Airborne Weapon Change

AWEPS – Assistant to the Weapons Officer

AWIS – All Weapons Information System

AWM – Awaiting Maintenance

AWMCS – Aviation Weapons Movement Control Station

AWP – Awaiting Parts

AWS – Aegis Weapon System

AWSE – Armament Weapons Support Equipment

AWSIM – Armament Weapon System Interchangeability Matrix

AWWS – Airborne Weapons Workload Schedule

BAI – Backup Aircraft Inventory

BAM – Baseline Assessment Memorandum

BAM-007 – Baseline Accounting Module

BCA – Business Case Analysis

BCM – Beyond Capable Maintenance

BCP – Budget Change Proposal

BDAR – Battle Damage Assessment Report

BDU – Bomb Dummy Unit

BES – Budget Estimate Submission

BFIMA – Battle Force Intermediate Maintenance Activity

BFM – Business Financial Management

BGM – Basic Ground Missile

BIT – Built-in-Test

BJM – Budget Justification Materials

BL – Bill of Lading

BMD – Ballistic Missile Defense

BMU – Beach Master Unit

BRM – Budget Renovation Model

BRU – Bomb Release Unit

BSTR – Booster Section

BUNO – Bureau Number

C&A – Certification and Accreditation

C,DOD – Comptroller, Department of Defense

C/C – Condition Code

CAA – Clean Air Act

CAA – Control Actuation Assembly

CAB – Centralized Accounting and Billing

CABS – Common As-Built System

CAC – Common Access Card

CAD – Cartridge Actuated Device

CAD – Computer Aided Design

CADMSS – Configuration and Data Management Support System

CAE – Computed Aided Engineering

CAG – Carrier Air Group

CAGE – Commercial and Government Entity

CAIM – Captive Air Intercept Missile

CALA – Combat Aircraft Loading Areas

CAIV – Cost as an Independent Variable

CAM – Computed Aided Manufacture

CAM-004 – Change Accounting Module

CANTRAC – Catalog of Navy Training Courses

CAO – Case Administering Office

CAO – Contract Administration Officer

CAP – Conventional Ammunition Plan

CAP/CAN – CAP/CAN Tactical Missile

CAP/CAN KIT – CAP/CAN Launch Kit

CARD – Cost Analysis Requirements Description

CAS – Center Aft Section

CAS – Combat Ammunition System

CAS – Control Actuation System

CAS – Corrective Action Subsystem

CASREP – Casualty Report

CAT – Category/Catalog

CATM – Captive Air Training Missile

CAWCF – Conventional Ammunition Working Capital Fund

CBASS – Common Broadband Advanced Sonar System

CBIT – Continuous BIT

CBM – Condition Based Maintenance

CBMR – Capabilities Based Munitions Requirements

CBT – Computer Based Training

CBU – Cluster Bomb Unit

CC – Classification of Characteristic

CCB – Change Control Board

CCB – Configuration Control Board

CCE – Component Cost Estimate

CCG – Computer Control Group

CCM – Counter-Countermeasure

CCSS – Commodity Command Standard System

CD – Command Destruct

CDA – Catalog Data Activity

CDCA – Central Data Collection Agency

CDD – Capabilities Development Document

CDI – Collateral Duty Inspector

CDMS – Core Data Management System

CDO – Command Duty Officer

CDQAR – Collateral Duty Quality Assurance Representative

CDR – Commander

CDR – Critical Design Review

CDRL – Contract Data Requirements List

CE – Combat Expenditure

CED – CONUS East Division

CES – Contractor Evaluation System

CEST – Classroom Explosive Ordnance Disposal System Trainer

CETARS – Corporate Enterprise and Training Activity Resource System

CETS – Contractor Engineering Technical Services

CFA – Cognizant Field Activity

CFFC – Commander, Fleet Forces Command

CFM – Contractor Furnished Material

CFO – Chief Financial Officer

CFR – Code Federal Regulations

CG – Commanding General

CG – Compatibility Group

CG – Control Group

CHB – Cargo Handling Battalion

CHIL – Consolidated Hazardous Item List

CI – Configuration Item

CID – Commercial Item Description

CIIC – Controlled Inventory Item Codes

CIL – Critical Items Watch List

CIN – Course Identification Number

CIO – Chief Information Officer

CIPPS – Configuration Identification Procurement Planning Sheets

CISR – Configuration Identification

CITIS – Contractor Integrated Technical Information Services

CIWS – Close-In Weapon System

CJCS – Chairman of the Joint Chief of Staff

CLF – Combat Logistic Force

CLIN – Contract Line Item Number

CLS – Capsule Launching System

CM – Case Manager

CM – Configuration Management

CMBRE – Common Munitions BIT/Reprogrammable Equipment

CMC – Commandant of the Marine Corps

CMEA – Cognizant Maintenance Engineering Activity

CMIS – Configuration Management Information System

CMM-002 – Contract Monitoring Module

CMP – Configuration Management Plan

CNAD – Conference of National Armaments Directors

CNATT – Center for Naval Aviation Technical Training

CNATTU – Center for Naval Aviation Technical Training Unit

CNC – Change Notice Card

CNET – Chief of Naval Education and Training

CNETC – Commander Naval Education and Training Command

CNO – Chief of Naval Operations

CNP – Chief of Naval Personnel

CNSF – Commander Naval Surface Forces

CO – Commanding Officer

COBAL – Common Oriented Business Language

COCOM – Combatant Commands

CODR – Conventional Ordnance Deficiency Report

COG – Cognizance

COI – Critical Operational Issue

COMMARFORCOM – Commander, U.S. Marine Corps Forces Command

COMMARFORPAC – Commander, U.S. Marine Corps Forces Pacific

COMFLTACT – Commander, Fleet Activity

COMINEWARCOM – Commander, Mine Warfare Command

COMLOGWESTPAC – Commander, Logistics Forces, Western Pacific

COMNAVAIRFOR – Commander, Naval Air Forces

COMNAVAIRESFOR – Commander, Naval Air Reserve Force

COMNAVAIRLANT – Commander, Naval Air Force, Atlantic

COMNAVAIRPAC – Commander, Naval Air Force, Pacific

COMNAVAIRSYSCOM – Commander, Naval Air Systems Command

COMNAVSPECWARCOM – Commander, Naval Special Warfare Command

COMNAVAIRWARCEN – Commander, Naval Air Warfare Center

COMNAVRESFOR – Commander, Naval Reserve Force

COMNAVSAFECEN – Commander, Naval Safety Center

COMNAVSEASYSCOM – Commander, Naval Sea Systems Command

COMNAVSUPSYSCOM – Commander Naval Supply Systems Command

COMNAVSURFLANT – Commander, Naval Surface Force, U.S. Atlantic Fleet

COMNAVSURFOR – Commander, Naval Surface Forces

COMNAVSURFPAC – Commander, Naval Surface Force, Pacific

COMNAVSURFRESFOR – Commander, Naval Surface Reserve Force

COMOPTEVFOR – Commander Operational Test and Evaluation Force

COMPACFLT – Commander, U. S. Pacific Fleet

COMPTUEX – Composite Training Unit Exercise

COMSC – Commander, Military Sealift Command

COMUSFLTFORCOM – Commander, U.S. Fleet Forces Command

COMUSLANTFLT – Commander, U.S. Atlantic Fleet

COMUSNAVEUR – Commander, U.S. Naval Forces Europe

COMUSNAVCENT – Commander, U.S. Naval Forces Central Command

COMUSPACFLT – Commander, U.S. Pacific Fleet

COND Code – Condition Code (CC)

CONPLAN – Contingency Plan

CONREP – Connected Replenishment

CONT – Control

CONUS – Continental United States

COPE – Conventional Ordnance Performance Evaluation

COR – Current Operational Requirements

CORP – Conventional Ordnance Resource Portal

COSAL – Coordinated-Shipboard Allowance List

COSBAL – Consolidated Shore Based Allowance List

COSR – Conventional Ordnance Safety Review

COT – Consolidated Operability Test

COTS – Commercial Off-The Shelf

CPA – Chairman of the Joint Chiefs of Staff Program Assessment

CPAM – CNO's Program Analysis Memorandum

CPAR – Contractor Performance Assessment Report

CPD – Capabilities Production Document

CPG – Contingency Planning Guidance

CPI – Critical Program Information

CPIN – Computer Program Identification Number

CPR – Chairman of Joint Chief's of Staff Program Recommendation

CPR – Contract Performance Report

CR – Combat Requirements

CRA – Continuing Resolution Authority

CRC – Crisis Response Cell

CRD – Complete Round Dictionary

CRIPL – Consolidated Remain-In-Place List

CRLCMP – Computer Resources Life Cycle Management Plan

CRMS – Contingency Retention Munitions Stock

CRS – Contingency Retention Stocks

CSA – Chief of Staff, Army

CSA – Configuration Status Accounting

CSC – Computer Software Component

CSCI – Computer Software Configuration Item

CSE – Common Support Equipment

CSEL – Combat System Equipment List

CSF – Configuration Summary Form

CSG – Carrier Strike Group

CSMP – Current Ship's Maintenance Project

CSRA – Combat Systems Readiness Assessment

CTM – Captive Test Missile

CTPL – Central Technical Publication Library

CUA – Combat Usable Assets

CURTS – Consolidated Unsatisfactory Report Tracking System

CVBG/ARG – Carrier Battle Group/Amphibious Ready Group

CVER – Canted Vertical Ejector Rack

CVN – Aircraft Carrier, Nuclear

CVT – Controlled Variable Time

CWA – Clean Water Act

CWI – Continuous Wave Illumination

CY – Calendar Year (January – December)

D/C – Defect Code

DA – Design Agent

DAAS – Defense Automatic Addressing System

DAB – Defense Acquisition Board

DAC – Defense Ammunition Center

DAL – Data Analysis Lead

DAP – Depot Acceptance Program

DAP – Digital Auto Pilot

DAPML – Deputy Assistant Program Manager for Logistics

DARCOM – U.S. Army Material Development and Readiness Command

DAS – Defensive Armament System

DASN/IP – Deputy Assistant Secretary of the Navy for International Programs

DATM – Dummy Air Training Missile

DAU – Defense Acquisition University

DAWIA – Defense Acquisition Workforce Improvement Act

DC – Damage Control

DCAA – Defense Contract Audit Agency

DCF – Document Control Form

DCMA – Defense Contract Management Agency

DCNO – Deputy Chief of Naval Operations

DCP – Decision Coordinating Paper

DCS – Deputy Chief of Staff

DCS – Digital Computer Set

DDA – Designated Disposal Authority

DDESB – Department of Defense Explosive Safety Board

DEERS – Defense Enrollment Eligibility Reporting System

DEMIL – Demilitarization

DEMVAL – Demonstration and Validation

DES – Data Entry System

DET – Detachment

DFARS – Defense Federal Acquisition Regulations Supplement

DFAS – Defense Finance and Accounting Service

DFD – Design for Demilitarization

DFRIF – Defense Freight Railway Interchange Fleet

DG – Defense Guidance

DIA – Defense Intelligence Agency

DIC – Document Identifier Code

DID – Data Item Description

DIDS – Defense Integrated Data System

DIRSSP – Director, Strategic Systems Program

DISP – Disposition

DITER - Digital Improved Triple Ejector Rack

DLA - Defense Logistics Agency

DLIS - Defense Logistics Information Service

DLM - Depot Level Maintenance

DLR - Depot Level Repairable

DLSC - Defense Logistics Support Center

DMI - Depot Maintenance Interservicing

DMISA - Depot Maintenance Interservice Support Agreement

DMLGB - Dual Mode Laser Guided Bomb

DMM - Discarded Military Munitions

DMS - Defense Messaging System

DMT - Distributed Mission Trainer

DMWR - Depot Maintenance Work Requirements

DNO - Did Not Occur

DOC - Data Operations Center

DOC - Days of Combat

DOD - Department of Defense

DODAAC - Department of Defense Activity Address Code

DODAC - Department of Defense Ammunition Code

DODCS - DOD Constant Surveillance Service

DODD - Department of Defense Directive

DODI - Department of Defense Instruction

DODIC - Department of Defense Identification Code

DOE - Department of Energy

DOLI - Date of Last Inventory

DOLT - Date of Last Test

DOM - Date of Manufacture

DON - Department of Navy

DONI - Department of Navy Issuances

DOP - Designated Overhaul Point

DOT - Department of Transportation

DPAS – Defense Priorities and Allocation System

DPG – Defense Planning Guidance

DPIA – Docking Planned Incremental Availability

DR – Deficiency Report

DRB – Defense Resources Board

DRB – Deficiency Review Board

DRIPR – Disposal, Redistribution, Issue, Procurement and Repair

DRLOG – Deficiency Reporting Log

DRMMR – Defense Reutilization and Marketing Precious Metal Recovery Office

DRMO – Defense Reutilization Marketing Office

DRMR – Defense Reutilization Marketing Region

DRMS – Defense Reutilization Marketing Service

DRO – Disposal Release Order

DRP – Designated Repair Point

DRPM – Direct Reporting Program Managers

DRWEB – Deficiency Reporting Web-Based

DS – Disposal Stock

DSA – Davit/Sheave Assembly

DSA – Defense Supply Agency

DSAA – Defense Security Assistance Agency

DSACS – Defense Standard Ammunition Computer System

DSAMS – Defense Security Assistance Management System

DSC – Deployment Support Command

DSCA – Defense Security Cooperation Agency

DSF – Data Services Facility

DSMAC – Digital Scene Matching Area Correlator

DSMC – Defense Systems Management College

DSN – Defense Switched Network

DSP – Designated Support Point

DSS – Distribution Standard System

DT&E – Developmental Test and Evaluation

DT/OT – Developmental Test/Operational Test

DTG – Date-Time-Group

DTID – Disposal Turn-In Document

DTPL – Dispersed Technical Publication Library

DTRM – Dual Thrust Rocket Motor

DTS – Defense Transportation System

DTTS – Defense Transportation Tracking System

DU – Depleted Uranium

DUP – Depot Utilization Plan

DVP – Design Verification Plan

DVR – Design Verification Report

DWCF – Defense Working Capital Fund

E&T – Exercise and Training

E/I – Engineering Investigation

EA – Engineering Agent

EAGLE – Enhanced Automated Graphical Logistics Environment

ECC – Error Classification Code

ECE – Environmental Compliance Evaluation

ECM – Electronic Countermeasures

ECMFR – Electronic Cruise Missile Field Report

ECP – Engineering Change Proposal

ECR – Electronic Combat and Reconnaissance

ECS – Environmental Control System

ECTS – Engineering Change Tracking System

EDCA – Executive Director for Conventional Ammunition

EDM – Engineering Development Model

EDMICS – Engineering Data Management Information and Control System

EED – Electro Explosive Device

EEOL – Earliest End of Life

EEPROM – Electronic Erasable Programmable Read Only Memory

EER – Explosive Event Report

EHR – Equipment History Record

EI – Engineering Investigation

EIA – Electronic Standards Alliance

EIC – Equipment Identification Code

EIDS – Extremely Insensitive Detonating Substances

EIM-006 – ECP Impact Module

EIR – Engineering Investigation Request

EMATT – Expendable Mobile ASW Training Target

EMCON – Emission Control

EMD – Engineering Manufacturing and Development

EMI – Electromagnetic Interference

EMP – Electromagnetic Pulse

EMR – Explosive Mishap Report

EMS – Engineering Management System

EMS – Electromagnetic Static

EMT – Elapsed Maintenance Time

EOA – Early Operational Assessment

EOC – End of Construction

EOC – Equipment Operational Capability

EOD – Explosive Ordnance Disposal

EODDET – Explosive Ordnance Disposal Detachment

EODGRU – Explosive Ordnance Disposal Group

EODMU – Explosive Ordnance Disposal Mobile Unit

EODTEU – EOD Training and Evaluation Unit

EOH – Emergency Ordnance Handling

EOQ – Economical Order Quantity

EOR – Equipment Operating Record

EPA – Environmental Protection Agency

EPDM – Ethylene Propylene Diene Monomer

ER – Extended Range

ERAM – Extended Range Active Missile

ERDL - Extended Range Data Link

ERF - Evolved Radio Frequency

ERMS - Economic Retention Munitions Stock

ERS - Economic Retention Stock

ESAD - Electronic Safe/Arm Device

ESD - Electrostatic Discharge

ESDS - Electronic Software Distribution System

ESED - Expeditionary System Evaluation Division

ESG - Expeditionary Strike Group

ESI - Explosive Safety Inspection

ESO - Explosive Safety Officer

ESOH - Environmental, Safety, and Occupational Health

ESQD - Explosive Safety Quantity Distance

ESS - Electronic Security Systems

ESS - Explosive Safety Submissions

ESSA - Explosives Safety Self Audit

ESSM - Evolved Sea Sparrow Missile

ESSO - Explosives Safety Support Office

ESTMS - Explosives Safety Technical Manual System

ESU - Elevator Support Unit

ETA - Estimated Time of Arrival

ETI - Elapsed Time Indicator

ETS - European Telecommunication Standards

EU - Electronic Unit

EVM - Earned Value Management

EX - Explosive Registry

F/AD - Force/Activity Designator

FAA - Foreign Assistance Act

FAAT - First Article Acceptance Testing

FACO - Final Assembly Checkout

FAD - Force Activity Designator

FAM – Functional Area Manager

FAR – Federal Acquisition Regulation

FASOTRAGRULANT/PAC – Fleet Aviation Specialized Operational Training Group Atlantic/Pacific

FAT – First Article Tests/Testing

FAU – Fin Actuator Unit

FBM – Fleet Ballistic Missile

FCA – Functional Configuration Audit

FCC – Fleet Combatant Commanders

FCD – Functional Configuration Documentation

FCG – Flight Control Group

FCI – Functional Configuration Identification

FCS – Federal Catalog System

FCS – Fire Control System

FCTCL – Fleet Combat Training Center Atlantic

FDDI – Fiber Distributed Data Interface

FDDR – Full Rate Deployment Decision Review

FEDLOG – Federal Logistics Catalog

FFAR – Folding Fin Aircraft Rocket

FFCA – Federal Facility Compliance Act

FFT – For Further Transfer

FIFO – First-In/First-Out

FILL – Fleet Issue Load List

FIR – Financial Inventory Reports

FIRL – Fleet Issue Requirements List

FIUL – Fleet Issue Unit Load

FLEACT – Fleet Activity

FLEMATSUPPO – Fleet Material Support Office

FLIR – Forward Looking Infrared

FLIS – Federal Logistics Information System

FLR – Field Level Repairable

FLT – Fleet

FLTCOM – Fleet Commander

FLTMPS – Fleet Training Management and Planning System

FMECA – Failure Mode Effects and Criticality Analysis

FMF – Fleet Marine Force

FMFIA – Federal Managers Financial Integrity Act

FMS – Foreign Military Sales

FMSO – Fleet Material Support Office

FMT – Full Mission Trainers

FOA – Field Operating Activity

FOC – Full Operational Capability

FOD – Foreign Object Damage

FOS – Fleet Ordnance Support

FOT&E – Follow-on Test and Evaluation

FP – Failed Parts

FPA – Focal Plane Array

FPM – Federal Personnel Manual

FPM – Fixed Price Matrix

FPRDR – Full Rate Production Decision Review

FR – Fleet Return

FRA – Funded Reimbursable Authority

FRACAS – Failure Reporting And Corrective Action System

FRC – Fleet Readiness Center

FRP – Full Rate Production

FRS – Firing Reporting System

FSC – Federal Supply Classification

FSCM – Federal Supply Code for Manufacturers

FSG – Federal Supply Group

FSP – Fixed Standard Prices

FST – Fleet Support Team

FTC – Fleet Training Center

FTCLANT – Fleet Training Center, Atlantic

FTCPAC – Fleet Training Center, Pacific

FTD – Field Training Detachments

FTD – Fuze Trigger Device

FTE – Full Time Equivalent

FWST – Fleet Weapons Support Team

FY – Fiscal Year (October – September)

FYDP – Future Years Defense Program

G&C – Guidance and Control

GAO – Government Accountability Office

GBL – Government Bill of Lading

GBU – Guided Bomb Unit

GCS – Guidance Control Section

GFE – Government-Furnished Equipment

GFI – Government-Furnished Information

GFM – Government-Furnished Material

GFP – Government-Furnished Property

GITR – Guns Inventory Tracking and Reporting

GM – Gunners' Mate

GMLS – Guided Missile Launching System

GM-LTS – Guided Missile-Launcher Test Set

GMRP – Guided Missile Round Pack

GMVLS – Guided Missile Vertical Launching System

GMWS – Guided Missile Weapon System

GNM – Global Naval Message

GNOPP – Global Naval Ordnance Positioning Plan

GP – General Purpose

GPRA – Government Performance and Results Act

GPS – Global Positioning System

GS – Guidance Section

GS – Gun Subsystem

GSA – General Services Administration

GTN – Global Transportation Network

GU – Guidance Unit

GUID – Guidance Section

GUTE – Guidance Unit Test Equipment

GWS – Gun Weapons Systems

HAC – House Appropriations Committee

HALT – Highly Accelerated Life Testing

HARDMAN – Hardware/Manpower

HARM – High Speed Anti-Radiation Missile

HAS – Hydraulic Actuation Section

HASC – House Armed Services Committee

HASS – Highly Accelerated Stress Screening

HAW – Home All the Way

HBU – Hold for Build-UP

HC/D – Hazard Class Division

HCSDS – Hazardous Component Safety Data Statement

HERO – Hazards of Electromagnetic Radiation to Ordnance

HIPPAG – High Pressure Pure Air Generator

HM – Hazardous Material

HMB – HARPOON Missile Body

HMCM – Hazardous Materials Control and Management

HMO – Hazardous Material, Other

HMR – Hazardous Material Report

HMX-1 – Marine Helicopter Squadron One

HOH – Homing on Helicopters

HOJ – Homing on Jamming

HP – Hewlett-Packard

HQ – Headquarters

HQDA – Head Quarters, Department of the Army

HSC – Hardware Systems Command

HSWA – Hazardous and Solid Waste Amendments

HTPE – Hydroxyl-Terminated Polyether

HW – Hazardous Waste

HWT – Heavyweight Torpedo

I&E – Installations and Environment

IA – Information Assurance

IA – Inventory Accuracy

IAA – Item Assessment Agent

IAF – Inventory Accuracy Forums

I-AMMOWG – Interservice Ammunition Working Group

IAO – Inventory Accuracy Officer

IAS – Immediate Access Storage

IAS – Industrial Analysis Support

IAT – Inventory Assessment Test

IAW – In Accordance With

IBM – International Business Machines

IBR – Integrated Baseline Review

IBS – Integrated Booking System

ICAMP – Integrated Conventional Ammunition Maintenance Plan

ICAPP – Integrated Conventional Ammunition Procurement Plan

ICD – Initial Capabilities Document

ICE – Independent Cost Estimate

ICE – Inventory Control Effectiveness

ICLAMP – Intensified Closed Loop Aeronautical Management Program

ICP – Inventory Control Point

ICRL – Individual Component Repair List

ICS – Interim Contractor Support

ICS – International Classification for Standards

ICSS – Interim Contractor Supply Support

ICW – Interactive Courseware

ICWI – Interrupted Continuous Wave Illumination

IDE – Independent Development Evaluation or Integrated Data Environment

IDE – Integrated Digital Environment

IDMS – Integrated Disposal Management System

IDRC – Inter-Deployment Readiness Cycle

IDS – Intrusion Detection System

IDTP – Improved Decoy Tester Programmer

IEC – International Electro-technical Commission

IED – Improvised Explosive Device

IETM – Interactive Electronic Technical Manual

IFI – Immediate Fleet Issue

IFOBRL – In-Flight Operable Bomb Rack Lock

ILM – Intermediate Level Maintenance

ILS – Integrated Logistics Support

ILSM – Integrated Logistics Support Manager

ILSMIS – Integrated Logistics Support Management Information System

ILSMT – Integrated Logistics Support Management Team

ILSP – Integrated Logistics Support Plan

ILSWG – Integrated Logistics Support Working Group

IM – Insensitive Munitions

IM – Inventory Manager

IMA – Intermediate Maintenance Activity

IMER – Improved Multiple Ejector Rack

IMP – Integrated Master Plan

IMRL – Individual Material Readiness List

IMS – Integrated Master Schedule

IMU – Inertial Measurement Unit

INFOCEN – Information Center

INS – Inertial Navigation System

INSURV – Inspection and Survey

IOC – Initial Operational Capability

IOT&E – Initial Operational Test and Evaluation

IP – Industrial Preparedness

IPAR – Interim Performance Assessment Report (of the Contractor)

IPB – Illustrated Parts Breakdown

IPD – Interrupted Pulse Doppler

IPD – Issue Priority Designator

IPG – Industrial Processing Guide

IPM – Inventory Projection Model

IPO – International Programs Office

IPOD – Interim Proof of Delivery

IPP – Industrial Preparedness Planning

IPS – Illustrative Planning Scenarios

IPS – Integrated Program Summary

IPT – Integrated Product Team

IR – Infrared

IRC – Issue Restriction Code

IRCCM – Infrared Counter-Countermeasures

IRCM – Infrared Countermeasures

IRRIS – Intelligent Road & Rail Information Server

IRRS – Improved Rearming Rate System

IRU – Inertial Referencing Unit

ISCP – Integrated Strategic Capability Plan

ISD – Ignition Safety Device

ISD – Instructional System Design

ISEA – In-Service Engineering Agent

ISIC – Immediate Superior in Command

ISMIS – Industrial Support Management Information System

ISO – International Organization for Standardization

ISP – Information Support Plan

ISPP – Integrated Sponsor Program Proposal

ISSP – Interim Supply Support Plan

IST – In-Service Training

IT – Information Technology

ITALD – Improved Tactical Air Launched Decoys

ITER – Improved Triple Ejector Rack

ITL – Intent to Launch

ITR – Initial Technical Review

ITS – Independent Timing System

ITV – In-Transit Visibility

IWA – In Water Assembly

IWAR – Integrated Warfare Architecture

IWS3C – Naval Gunnery Project Officer

IWT – Integrated Weapons Team

J&A – Justification and Approval

JAIM – Joint Air Intercept Missile

JASAP – Joint Aircrew Systems Advisory Panel

JATO – Jet Assisted Takeoff

JCALS – Joint Computer-Aided Acquisition and Logistic Support

JCAP – Joint Conventional Ammunition Program

JCAPP – Joint Conventional Ammunition Policies and Procedures

JCF – Justification Cost Form

JCIDS – Joint Capabilities Integration and Development System

JCN – Job Control Number

JCS – Joint Chiefs of Staff

JDA – Joint Deployment Activity

JDAM – Joint Direct Attack Munition

JEDMICS – Joint Engineering Data Management Information and Control System

JETDS – Joint Electronic Type Designation System

JHCS – Joint Hazard Classification System

JHMCS – Joint Helmet Mounted Cueing System

JICWG – Joint Interface Control Working Group

JITC – Joint Interoperability Test Command

JLC – Joint Logistics Commander

JLRSA – Joint Long Range Strategic Appraisal

JMC – Joint Munitions Command

JMSNS – Justification for Major Systems New Start

JMTCA – Joint Munitions Transportation Coordinating Agency

JOCG – Joint Ordnance Commanders Group

JOPES – Joint Operations Planning and Excution System

JOR – Joint Operational Requirements

JORD – Joint Operational Requirements Document

JPAM – Joint Program Assessment Memorandum

JPG – Joint Programming Guidance

JRB – Joint Reserve Base

JROC – Joint Requirements Oversight Council

JSF – Joint Strike Fighter

JSOW – Joint Stand Off Weapon

JSP – Joint Surveillance Plan

JSPD – Joint Strategic Planning Document

JST – Joint Surveillance Team

JVC – Jet Vane Control

JWCA – Joint Warfare Capability Assessment

KPP – Key Performance Parameters

KSA – Key System Attributes

KW – Kinetic Warhead

LAD – Laser Aiming Devices

LAFD – Laser Arm and Fire Device

LAG – Low Altitude Guidance

LALS – Linkless Ammunition Loading System

LAMPS – Light Airborne Multipurpose System

LAMS – Local Asset Management System

LAN – Local Area Network

LANTFLT – Atlantic Fleet

LAP – Load, Assemble, and Pack

LAR – Launch Acceptable Region

LAT – Lot Acceptance Test

LBA – Launch Box Assembly

LCC – Life Cycle Cost

LCD – Liquid Crystal Display

LCMP – Life Cycle Management Plan

LCPO – Leading Chief Petty Officer

LCR – Logistics Complete Round

LCS – Littoral Combat Ship

LDCR – Logistics Data Collection and Retrieval

LDGP – Low Drag General Purpose

LEC – Local Engineering Change

LEEFI – Low Energy Exploding Foil Initiator

LEM – Logistics Element Manager

LEMA – Linear Electro-Mechanical Actuator

LFORM – Landing Force Operational Reserve Material

LFT&E – Live Fire Test and Evaluation

LGB – Laser Guided Bomb

LGTR – Laser Guided Training Round

LHA – Amphibious Assault Ship

LHT – Lightweight Hybrid Torpedo

LIDAR – Light Detecting and Ranging

LIRSH – List of Items Requiring Special Handling

LJDAM – Laser Joint Direct Attack Munition

LM – Logistics Manager

LMP – Logistics Management Program

LMTC – Lead Maintenance Technology Center

LOA – Letter of Acceptance

LOA – Letter of Offer and Acceptance

LOE – Level-of-Effort

LOGEVAL – Logistics Evaluation

LOGMARS – Logistics Application of Automated Marking and Reading System

LOI – Letter of Instruction

LOR – Letter of Request

LORA – Level of Repair Analysis

LOS – Line of Sight

LPD – Amphibious Transport Dock

LPH – Amphibious Assault Ship (General Purpose)

LPI – Low Probability of Intercept

LRA – Last Rework Activity

LRAM – Logistics Readiness Analysis Module

LRFS – Logistics Requirements and Funding Summary

LRIP – Low Rate Initial Production

LSA – Logistics Support Analysis

LSAP – Logistics Support Analysis Plan

LSAR – Logistics Support Analysis Record

LSE – Logistics Support Equipment

LSMP – Logistics Support and Mobilization Plan

LSN – Local Stock Number

LWT – Lightweight Torpedo

M&S – Modeling and Simulation

MAARS II – Marine Corps Ammunition Accounting/ Reporting System

MAC – Military Airlift Command

MAC – Munitions Armament Command

MAD – Mine Allowance Data Base

MAERU – Mobile Ammunition Evaluation and Reconditioning Unit

MAF – Maintenance Action Form

MAF – Master Ammunition File

MAG – Marine Aircraft Group

MAGTF – Marine Air Ground Task Force

MAIS – Major Automated Information System

MAJCOM – Major Command

MALS – Marine Aviation Logistics Squadron

MAN – Manufacturer

MAP – Munitions Application Program

MARCORPS – Marine Corps

MARCORSYSCOM – Marine Corps Systems Command

MARFOR – Marine Force Commander

MARS – Management Action Reporting System

MARSO – Marine Corps Ammunition Requirements Support Orders

MAS – Management Action System

MAS – Military Agency for Standardization

MAT – Missile Assist Team

MAU – Marine Amphibious Unit

MAW – Marine Air Wing

MBC – Missile-Borne Computer

MBI – Major Budget Issue

MC – Military Committee

MC – Military Constituents

MCAS – Marine Corps Air Station

MCB – Mobile Construction Battalion

MCC – Material Condition Code

MCC – Material Control Code

MCG – Midcourse Guidance

MCM – Mine Countermeasure

MCO – Marine Corps Order

MCO – Major Combat Operation

MCP – Maintenance Certification Period

MCP – Mission Capability Package

MCRL – Master Cross Reference List

MCS – Missile Control System/Mine Countermeasures Ship

MDA – Milestone Decision Authority

MDC – Maintenance Data Collection

MDCS – Maintenance Data Collection System

MDD – Maintenance Due Date

MDD – Materiel Development Decision

MDL – MAGTF Data Library

MDL – (Marine) Data Library

MDR – Maintenance Data Report

MDS – Maintenance Data System

ME – Munition Element

MEASURE – Metrology Automated System for Uniform Recall and Reporting

MEC – Medical Examiner's Certificate

MEC – Munitions and Expolsives of Concern

MECFA – Maintenance Engineering Cognizant Field Activity

MEDF – Missile Event Data Files

MER – Manpower Estimate Report

MER – Multiple Ejection Rack

MESS – Maintenance Engineering Support System

METCAL – Metrology/Calibration

MEU – Marine Expeditionary Unit

MHE – Material Handling Equipment

MHz – Megahertz

MI – Maintenance Instruction

MIC – Master Index of Consumables

MID – Management Initiative Decision

MIF – Master Item File

MILCON – Military Construction

MILPERS – Military Personnel

MIL-PRF – Military Performance Specification

MILSTAMP – Military Standard Transportation and Movement Procedures

MILSTRAP – Military Standard Transaction Reporting and Accounting Procedure

MILSTRIP* – Military Standard Requisitioning and Issue Procedures

MIM – Maintenance Instruction Manual

MIM – Missile Inventory Management

MIP – Maintenance Index Page

MIP – Malfunction Investigation Plan

MIPR – Military Interdepartmental Purchase Request

MIR – Master Index of Repairables

MIR – Mission Interface Removable

MISIL – Management Information System for International Logistics

MISMO – Maintenance Interservice Support Management Office

MK – Mark

MLA – Missile Launcher Assembly

MLI – Munitions List Item

MLM – Marine Location Markers

MLRC – Munitions and Logistics Readiness Center

MLSF – Mobile Logistics Support Fleet

MLSR – Missing, Lost, Stolen, or Recovered

MMCO – Maintenance/Material Control Officer

MMP – Monthly Management Plan

MMR – Military Munitions Rule

MMS – Marine Mammal System

MNS – Mission Need Statement

MOA – Memorandum of Agreement

MOB – Main Operating Base

MOE – Management Organization Entity

MOE RULE – Management Organization Entity Rule

MOMAG – Mobile Mine Assembly Group

MOOTW – Military Operation Other Than War

MOS – Military Occupational Specialty

MOSA – Modular Open Systems Approach

MOSS – Mobile Submarine Simulator

MOU – Memorandum of Understanding

MOV – Material Obligation Validation

MP&IS – Munitions Procurements and Inventories Studies

MPASS – Maintenance Plan and Supply Support System

MPF – Maritime Prepositioned Force

MPI – Missile Presentencing Inspection

MPPEH – Military Potentially Presenting an Explosive Hazard

MPRSA – Marine Protection, Research, and Sanctuaries Act

MPS – Maintenance Planning System

MPSL – Minimus Predicted Service Life

MPT – Manpower, Personnel and Training

MR – Medium Range

MR – Mission Readiness/Munitions Rule

MRC – Maintenance Requirements Card

MRD – Material Release Denial

MRI – Missile Reissue Inspection

MRIL – Master Repairable Item List

MRIP – Munitions Rule Implementation Policy

MRO – Material Release Order

MRO – MILSTRIP Release Order/Mission Readiness Objective

MRP – Munitions Requirements Process

MRT – Mean Repair Time

MSC – Military Sealift Command

MSD – Material Safety Data

MSD – Material Support Date

MSG – Message

MSI – Missile Sentencing Inspection

MSR – Master Stock Record

MSR – Module Service Record

MSS – Management Support Subsystem, Motor Surveillance Service

MSSR – Magazine Sprinkler System Review

MSST – Multi-Stage Supersonic Target

MTBF – Mean Time Between Failure

MTC – Mission Training Center

MTF – Mechanical Time Fuze

MTMC – Military Traffic Management Command

MTR – Mandatory Turn-in Repairables

MTT – Mobile Training Team

MTTR – Mean Time to Repair

MTW – Major Theater War

MU – Maneuverability Upgrade

N/A – Not Applicable

NAF – Naval Air Facility

NAIAP – Non-nuclear Ammunition Inventory Accuracy Program

NAIWG – Naval Ammunition Interoperability Working Group

NALC – Naval Ammunition Logistics Code

NALCOMIS – Naval Aviation Logistics Command Management Information System

NALDA – Naval Aviation Logistics Data Analysis

NAMDRP – Naval Aviation Maintenance Discrepancy Reporting Program

NAMP – Naval Aviation Maintenance Program

NAMSA – NATO Maintenance and Supply Agency

NAMSO – Naval Aviation Maintenance Support Office

NAPRNET – Non-classified Internet Protocol Router Network

NAR – Notice of Ammunition Reclassification

NARS – Notice of Ammunition Reclassification System

NAS – Naval Air Station

NATEC – Naval Air Technical Data and Engineering Service Command

NATM – Special Air Training Missile

NATO – North Atlantic Treaty Organization

NATOPS – Naval Air Training and Operating Procedures Standardization

NAVACTS – Naval Activities

NAVAIR – Naval Air Systems Command

NAVAIRENGSTA – Naval Air Engineering Station

NAVAIRINST – Naval Air Systems Command Instruction

NAVAIRLANT – Naval Air Force, Atlantic

NAVAIRPAC – Naval Air Force, Pacific

NAVAIRSYSCOM – Naval Air Systems Command

NAVAIRTECHDATAENGSERVCOM – Naval Air Technical Data and Engineering Services Command

NAVAIRWARCENAIRDIV – Naval Air Warfare Center Aircraft Division

NAVAIRWARCENWPNSDIV – Naval Air Warfare Center Weapons Division

NAVCOMPT – Navy Comptroller

NAVCOMTELSTA – Naval Computer and Tele-Communications Station

NAVEDTRA – Naval Education and Training

NAVEODTECHDIV – Naval Explosive Ordnance Disposal Technology Division

NAVFACENGCOM – Naval Facilities Engineering Command

NAVILCO – Naval International Logistics Command

NAVMAG – Naval Magazine

NAVORD – Naval Ordnance

NAVORDSAFSECACT – Naval Ordnance Safety and Security Activity

NAVORDSTA – Naval Ordnance Station

NAVOSH – Navy Occupational Safety and Health

NAVPETOFF – Naval Petroleum Office

NAVSAFECEN – Naval Safety Center

NAVSCOLEOD – Navy School, Explosive Ordnance Disposal

NAVSEA – Naval Sea Systems Command

NAVSEAINST – Naval Sea Systems Command Instruction

NAVSEALOGCEN – Naval Sea Logistics Center

NAVSEASYSCOM – Naval Sea Systems Command

NAVSHIP – Naval Ship

NAVSTA – Naval Station

NAVSUP – Navy Supply Systems Command

NAVSUP GLS AMMO – Naval Supply Systems Command Global Logistics Support (formally Naval Operational Logistics Support Center – AMMO (NOLSC-AMMO))

NAVSUP GLS AMMO-M – Naval Supply Systems Command Global Logistics Support (formally Naval Operational Logistics Support Center, Mechanicsburg (NOLSC-M))

NAVSUP WSS – Naval Supply Systems Command Weapon Systems Support (formerly Naval Inventory Control Point (NAVICP))

NAVSUP WSS-M – Naval Supply Systems Command Weapon Systems Support, Mechanicsburg (formerly Naval Inventory Control Point (NAVICP))

NAVSUPSYSCOM – Naval Supply Systems Command

NAVSURFWARCENDIV – Naval Surface Warfare Center Division

NAVTRANS – Naval Transportation Center

NAVTRANSSUPCEN – Navy Transportation Support Center

NAWC-WD – Naval Air Warfare Center – Weapons Division

NAWMU – Naval Airborne Weapons Maintenance Unit

NAWMU-1 – Naval Airborne Weapons Maintenance Unit One

NAWS – Naval Air Weapons Station

NBVC – Naval Base Ventura County

NCAS – Navy 2T Conventional Ammunition Systems

NCEA – Non-Combat Expenditure Allocation

NCER – Non-Combat Expenditure Requirement

NCR – National Capital Region

NCRDP – Navy Component Repair Defense Program

NCTS – Navy Civilian Technical Specialists

NDI – Nondestructive Inspection

NEC – Navy Enlisted Classification

NEPA – National Environmental Policy Act

NETC – Naval Education and Training Command

NEW – Net Explosive Weight

NEW – Network Enabled Weapons

NFESC – Naval Facilities Engineering Services Center

NGC – Northrop Grumman Corporation

NHA – Next Higher Assembly

NICN – Navy Item Control Number

NIFC-CA – Naval Integrated Fire Control-Counter Air

NIIN – National Item Identification Number

NIPO – Navy International Program Office

NIPR – Network Internet Protocol Router

NIPRNET – Non-classified Internet Protocol Router Network

NITRAS – Navy Integrated Training resourses and Administration System

NKO – Navy Knowledge Online

NLO – Navy Liaison Office

NMC – Navy Munitions Command

NMCI – Navy Marine Corps Intranet

NMCM – Non-Mission Capable Maintenance

NMCS – Non-Mission Capable Supply

NMCT – Non-Mission Capable Target Auxiliary/Augmentation System

NNMSB – Non-Nuclear Munitions Safety Board

NNOP – Non-Nuclear Ordnance Planning

NNOR – Non-Nuclear Ordnance Requirement

NNORS – Non-Nuclear Ordnance Requirements Study

NOAO – Navy Ordnance Assessment Officer

NOBC – Navy Officer Billet Code

NOC – Not Otherwise Coded

NOMIS – Naval Ordnance Management Information System

NOMP – Naval Ordnance Management Policy (formerly NOMMP)

NOR – Notice of Revision

NORIP – Naval Ordnance Readiness Improvement Program

NOSSA – Naval Ordnance Safety and Security Activity

NP – New Product

NPDES – National Pollutant Discharge Elimination System

NPDS – New Production Delivery System

NRFI – Non Ready For Issue

NSA – NATO Standardization Agency

NSA – Navy Stock Account

NSAWC – Naval Strike and Air Warfare Center

NSC – Naval Supply Center

NSD – Naval Supply Depot

NSF – Navy Stock Fund

NSGA – Naval Security Group Activity

NSN – National Stock Number

NSO – Numeric Stockage Objective

NSS – Naval Supply System

NSSC – Navy Shipping and Storage Container

NSSM – NATO Sea Sparrow Missile

NSWC – Naval Surface Warfare Center

NSWC PHD – Naval Surface Warfare Center Port Hueneme Division

NSWCDIV – Naval Surface Warfare Center Division

NSWCIHDET – Naval Surface Warfare Center Indian Head Detachment

NSWC-PC – NSWC Panama City

NTDS – Naval Tactical Data System

NTFS – Navy Training Feedback System

NTMPS – Navy Training Management Planning System

NTP – Navy Training Plan

NTS – Night Targeting System

NTSB – National Transportation Safety Board

NTSP – Navy Training System Plan

NUWCDIVNPT – Naval Undersea Warfare Center Division Newport

NVLNO – Navy Liaison Office

NWAS – Naval Warfare Assessment Station

NWCAP – Nuclear Weapons Corrective Action Program

NWCF – Navy Working Capital Fund

NWDC – Naval Warfare Development Command

NWDC – Naval Warfare Doctrine Command

NWP – Naval Warfare Publication

NWS – Naval Weapon Station

NWSF – Naval Weapons Supply Facility

O&M,N – Operations and Maintenance, Navy

O&S – Operations and Support

O/EDCA – Office of the Executive Director for Conventional Ammunition

OA – Obligation Authority

OA – Operational Assessment

OA – Ordnance Assessment

OAA – Ordnance Assessment Activities

OAA – Ordnance Assessment Agent

OAAR – Ordnance Assesment Annual Report

OAC – Ordnance Assessment Coordinator

OAITP – Ordnance Assessment Item Test Plan

OAITR – Ordnance Assessment Item Test Report

OAMCM – Organic Airborne Mine Countermeasure

OAP – Ordnance Assessment Plan

OAP – Ordnance Assessment Program

OAP – Ordnance Assessment Profile

OAPM – Ordnance Assessment Planning Module

OAPP – Ordnance Assessment Program Plan

OAT – Ordnance Assessment Technician

OATE – Ordnance Assessment Technologies and Equipment

OBE – Operating Budget Estimate, Overcome By Events

OCC – Operator Control Console

OCONUS – Outside Continental United States

OCP – Operator Control Panel

ODS Ozone Depleting Substance

OEM – Original Equipment Manufacturer

OESO – Ordnance Environmental Support Office

OFS – Operational Flight Software

OHE – Ordnance Handling Equipment

OHF – Over Head Fire

OHO – Ordnance Handling Officer

OIB – Operator Initiated BIT

OIC – Officer-In-Charge

OIS – Ordnance Information System

OIS-R – Ordnance Information System-Retail

OIS-W – Ordnance Information System-Wholesale

OJT – On-the-Job Training

OLA – Navy Office of Legislative Affairs

OLM – Operational Level Maintenance

OLOM – Ordnance Loadout Planning Module

OLSP – Operational Logistics Support Plan

OMA – Organizational Maintenance Activity

OMB – Office of Management and Budget

OMD – Operations Maintenance Division

OMS – Ordnance Management System

ONR – Office of Naval Research

OOB – Out-of-Balance

OOD – Office of the Deck

OOMA – Optimized Organizational Maintenance Activity

OPCOM – Operational Commander

OPEVAL – Operational Evaluation

OPF – Operational Planning Factors

OPLAN – Operations Plan

OPLIFT – Opportune Lift

OPN – Other Procurement, Navy

OPNAV – Office of the Chief of Naval Operations

OPNAVINST – Chief of Naval Operations Instruction

OPOM – Optimized Performance Model

OPREP – (Commander's) Operational Report

OPRN – Operation

OPSCAN – Optical Scan

OPTAR – Operation Target

OR – Operational Requirement

ORD – Operational Requirements Document (now the CPD)

ORDALT – Ordnance Alteration

ORM – Operational Risk Management

OS – Operational Stocks

OSC – Operations Support Command

OSI – Operational Support Inventory

OSS&E – Operational Safety Suitability and Effectiveness

OT – Operational Test

OT&E – Operational Test and Evaluation

OTA – Operational Test Activities

OTH – Over-the-Horizon

OTR – Outyear Threat Report

OTRR – Operational Test Readiness Review

OWRMR – Other War Reserve Material Requirement

P&A – Price and Availability

P&G – Policy and Guidance

P/N – Part Number

P3I – Pre-Planned Product Improvement

PAA – Procurement Ammunition Army

PACFLT – Pacific Fleet

PAD – Propellant Actuated Device

PAGS – Pure Air Generating System

PAI – Primary Aircraft Inventory

PAN-MC – Procurement, Ammunition Navy, Marine Corps

PARTS – Program Support Data Automated Reporting and Tracking System

PAS – Pre-award Surveys

PASE – Preloaded Accessory Suspension Equipment

PBD – Program Budget Decision

PBIT – Power-up Built In Test

PBL – Performance Based Logistics

PBL – Product Base Line

PBP – Production Base Plan

PC – Personal Computer

PCA – Physical Configuration Audit

PCD – Program Change Decision

PCMCIA – Personal Computer Memory Card International Association

PCO – Procurement Contracting Office

PCP – Program Change Proposal

PCR – Program Change Request

PD – Proficiency Demonstration

PD – Project Directive

PD – Pulse Doppler

PDA – Power Distribution Assembly

PDLI – Project Directive Line Item

PDM – Production Data Management

PDM – Program Decision Memoranda

PDM – Program Documentation Management

PDP – Procurement Data Packages

PDR – Preliminary Design Review

PDREP -Product Deficiency Reporting and Evaluation Program

PE – Potential Excess

PEB – Pre-Expended Bin

PEO – Program Executive Officer

PEO(U&W) – Program Executive Officer for Unmanned Aviation and Strike Weapons

PEO-Ammo – Program Executive Office, Ammunition

PEO IWS – Program Executive Officer Integrated Warfare Systems

PEO IWS3C – Naval Gunner Project Office

PEO IWS3C – Program Executive Officer Integrated Warfare System, Naval Gunnery Project Office

PERA – Planning, Engineering, Repair and Alteration

PESHE – Programmatic Environment, Safety, and Occupational Health Evaluation

PEST – Practical EOD System Trainer

PFS – Principal for Safety

PGM – Precision Guided Munitions

PHS – Pod Housing Subsystem

PHS&T – Packaging, Handling, Storage, and Transportation

PIA – Planned Incremental Availability

PICA – Primary Inventory Control Activity

PID – Procurement Initiation Document

PII – Product Improvement Initiative

PIP – Product Improvement Program

PJT – Practical-Job-Training

PLR – Periodic Lot Report

PM – Program Manager

PMA – Program Manager Air

PMCS – Partial Mission Capable Supply

PME – Precision Measuring Equipment

PMI – Proposed Military Improvement

PMIC – Periodic Maintenance Information Card

PMO – Program Management Office

PMRC – Prepositioned Material Receipt Card

PMRM – Periodic Maintenance Requirements Manual

PMS – Planned Maintenance System

PNS – Precise Navigation System

PO – Program Objective

POA&M – Plan of Action and Milestones

POC – Point of Contact

POE – Point of Entry

POE – Program Office Estimate

POHE – Portable Ordnance Handling Equipment

POL – Petroleum, Oil and Lubricant

POM – Program Objectives Memorandum

POP – Performance Oriented Packaging

PP – Procurment Planning

PP&C – Production Planning and Control

PPBES – Planning Programming and Budgeting and Execution System

PPBS – Planning, Programming and Budgeting System

PPE – Personnel Protection Equipment

PPP – Program Protection Plan

PPP&M – Preservation, Packaging, Packing, and Marking

PPS – Pod Pressurization Subsystem

PPS – Procurement and Production Status

PPWR – Prepositioned War Reserve

PQDR – Product Quality Deficiency Reports

PQS – Personnel Qualification Standards

PR – Potential Reutilization

PR – Program Review

PR/DS – Potential Reutilization/Disposal Stock

PRESBUD – President's Budget

PRP – Procurement, Renovation, and Production

PRR – Production Readiness Review

PRS – Provisioning Requirements Statement

PSC – Product Support Center

PSD – Program Support Data

PSE – Peculiar Support Equipment

PSECA – Primary Support Equipment Controlling Authority

PSICP – Program Support Inventory Control Point

PSM – Product Support Managers

PSP – Performance Standards Program

PSS – Procurement Status System

PSS – Propulsion/Steering Section

PSTL – Product Support Team Lead

PTD – Phased Threat Distribution

PTT – Parts Task Trainer

PUB – Power Up BIT

PWRMR – Prepositioned War Reserve Material Requirement

PWRR – Prepositioned War Reserve Requirement

PWRS – Prepositioned War Reserve Stock

Q&RA – Quality and Reliability Assurance

QA – Quality Assurance

QA/A – Quality Assurance/Analysis

QALI – Quality Assurance Letter of Instruction

QAO – Quality Assurance Officer

QAP – Quality Assurance Provisions

QAR – Quality Assurance Representative

QATIP – Quality Assurance Test and Inspection Plan

QDR – Quadrennial Defense Review

QDR – Quality Deficiency Report

QEMO – Quality Engineering Management Office

QFF – Quantitative Fleet Feedback

QRT – Quick Response Team

QSMR – Quad-Service Maintenance Review

QSR – Quad Service Review

QT – Qualification Testing

QUAL/CERT – Qualification/Certification

R&D – Research and Development

R&M – Reliability and Maintainability

R/R – Repair/Replace

RAA – Required Assets Availability

RAD – Resource Allocation Display

RADHAZ – Radiation Hazard

RAM – Random Access Memory

RAM – Rolling Airframe Missile

RAMEC – Rapid Action Minor Engineering Change

RAMICS – Rapid Airborne Mine Clearance System

RAM-Q – Reliability, Availability, Maintainability, and Quality Analysis

RAMS - Reliability Asset Management System

RAMS - Reliability Asset Monitoring System

RAN - Royal Australian Navy

RAP - Round Analysis Program

RAT - Remote Access Terminal

RATS - Reports Action Tracking System

RATO - Rocket Assisted Takeoff

RAV - Restricted Availability

RBLP - Requirments Based Load Plan

RCA - Request for Contractual Authorization

RCM - Reliability Centered Maintenance

RCN - Reeport Control Number

RCRA - Resource Conservation and Recovery Act

RD&A - Research, Development and Acquisition

RDBMS - Relational Data Base Management System

RDD - Re-certification Due Date (RAM only)

RDD - Required Delivery Date

RDJTF - Rapid Deployment Joint Task Force

RDT&E - Research, Development, Test, and Evaluation

RDT&E,N - Research, Development, Test, and Evaluation, Navy

RECTYP - Record Type

RF - Radio Frequency

RFD - Request for Deviation

RFG - Roll-Free Gyro

RFI - Ready for Issue

RFIO - Ready for Issue Objective

RFP - Request for Proposal

RFW - Request for Waiver

RIC - Routing Identifier Code

RIE - Requisition in English

RIK - Replacement in Kind

RIW – Reliability Improvement Warranty

RKT MTR – Rocket Motor

RMA&Q – Reliability, Maintainability, Availability, and Quality

RMS – Raytheon Missile Systems

RMS – Resource Management Systems

ROD – Report of Discrepancy

ROLMS – Retail Ordnance Logistics Management System

ROR – Repair of Repairables

RPV – Remotely Piloted Vehicles

RR – Rear Receiver

RRMS – Requirement Related Munitions Stock

RRR – Residual Readiness Requirement

RSI – Repairable of Support Inventory

RSL – Ready Service Locker

RSP – Render Safe Procedures

RSS&I – Receipt, Segregation, Storage, and Issue

RSSI – Receipt, Segregation, Storage, and Issue

S&A – Safe and Arm

SA – Security Assistance

SA – Staging Assembly

SAC – Senate Appropriations Committee

SAD – Safety Arming Device

SAFE – Safety Assessment for Energetics

SAIP – Spares Acquisition Integrated with Production

SAL – Standing Approval List

SAL – Semi Active Laser

SALTS – Streamlined Alternative Logistics Transmitting System

SAMC – Security Assistance Management Control

SAMC – Surface Ammunition Control

SAMP – Single Acquisition Management Plan

SAP – Security Assistance Program

SAPDO – Special Accounts Property Disposal Officer

SAS – Stored Ashore Stocks

SASC – Senate Armed Services Committee

SAU – Safe and Arming Unit

SAW – Spring Arming Wire

SBL – S-Band Link

SC – Surveillance Coordinator

SCEPS – Stored Chemical Energy Propulsion System

SCG – Storage Compatibility Group

SCIR – Subsystem Compatibility Impact Reporting

SCN – Specification Change Notice

SCS – Steering Control Section

SCWDL – Strike Common Weapon Data Link

SD – Self Destruct

SD&D – System Development and Design

SDAF – Special Defense Acquisition Fund

SDAN – Source Data Automation Network

SDDC – Surface Deployment and Distribution Command

SDH – Sample Data Homing

SDLM – Standard Depot Level Maintenance

SDP – Software Development Plan

SDPDA – Special Defense Property Disposal Account

SDR – Supply Demand Review

SDR – Supply Discrepancy Report

SDS – Standard Depot System

SDW – SIDEWINDER (Tactical Weapon)

SE – Support Equipment

SEC – Security (Classification – from Stock List)

SEC – Support Equipment Change

SECA – Support Equipment Controlling Authority

SECDEF – Secretary of Defense

SECL – Support Equipment Candidate List

SECNAV – Secretary of the Navy

SECT – Submarine Emergency Communications Transmittals

SEMS – Support Equipment Management System

SEP – Systems Engineering Plan

SEPP – Software Engineering Practices and Procedures

SER – Serial

SERD – Support Equipment Recommendation Data

SERMIS – Support Equipment Resources Management Information System

SERVSCOLCOM – Service Schools Command

SESSA – Shipboard Explosive Safety Self Assessment

SF – Standard Form

SFR – System Functional Review

SFTP – Strike Fighter Training Program

SFWSL – Strike Fighter Weapons School Atlantic

SFWSP – Strike Fighter Weapons School Pacific

SHIPALT – Ship Alteration

SHOLS – Single Hoist Ordnance Loading System

SHORCAL – Shore-based Consolidated Allowance List

SIA – System Integration Agent

SIAT – Ship Installation Assurance Test

SICA – Secondary Inventory Control Activity

SICA – Secondary Item Control Activity

SIMA – Shore Intermediate Maintenance Activity

SIMSL – Shore Intermediate Maintenance Support List

SIN – Scrap Identification Number

SIP – State Implementation Plan

SIPRNET – Secret Internet Protocol Router Network

SISR – Selected Item Status Report

SIST – Serviceable In-Service Time

SITREP – Situation Report

SLAC – Shelf-Life Action Code

SLAMS – Surveillance Lot Acceptance and MAERU (Test Database) System

SLC – Shelf-Life Code

SLC DET – Submarine Learning Center Detachment

SLEP – Service Life Extension Program

SLITS – Serialized Lot Item Tracking System

SLMM – Submarine Launched Mobile Mine

SM – Satellite Motor

SM – Single Manager

SM – Standard Missile

SM&R – Source, Maintenance, and Recoverability

SMCA – Single Manager for Conventional Ammunition

SME – Subject Matter Expert

SMIC – Special Material Identification Code

SML – Support Material List

SMS – Stores Management Systems

SM-T – Standard Missile-Terminal

SNA – Systems Network Architecture

SNAP-1 – Shipboard Non-tactical ADP Program

SNS – Satellite Motor Surveillance

SO – Safety Observer

SOC – Special Operations Command

SODARR – Source Data Revision Request

SOF – Special Operations Forces

SOO – Statement of Objectives

SOP – Standard Operating Procedure

SOPD – Stand-off Outside Point Defense

SOS – Source of Supply

SOT – System Operability Test

SOW – Statement of Work

SPC – Shop Process Card

SPC - Statistical Process Control

SPD - System Program Director

SPECWAR - Special Warfare

SPF - Strategic Planning Factors

SPG - Strategic Planning Guidance

SPM - Shots Per Minute

SPP - Sponsor Program Proposal

SPS - Stock Points for Sampling

SPW - SPARROW (Air Launched Tactical Missile)

SQL - Structured Query Language

SRA - Shop Replaceable Assembly

SRC - Scheduled Removal Component

SRCE Code - Source Code

SRF - Ship Repair Facility

SRF - Specialized Repair Facility

SRM - Short-range Missile

SRP - Stockpile Reliability Program

SRR - Strategic Readiness Requirement

SRR - System Requirements Review

SSAA - System Security Authorization Agreement

SSC - Shipping/Storage Container

SSC - Small Scale Conflict

SSC - Small Scale Contingencies

SSC - Supply Support Center

SSGN - Guided Missile Submarine, Nuclear

SSIR - Supply System Inventory Report

SSM - System Support Manager

SSMP - Supply Support Management Plan

SSP - Source Selection Plan

SSP - Strategic Systems Program

SSR - Software Specification Review

SSRA – Sub-Shop Replaceable Assembly

SSS TRP – System Software Safety Technical Review Panel

SSST – Supersonic Sea Skimming Target

SST – Ships Suitablity Test

SSWG – System Safety Working Group

STA – System Threat Assessment

STANAG – Standardization Agreement

STAR – SURF Traveling Actuated Remotely

STARS – Standard Accounting and Reporting System

STO – Storage

STP – System Training Plan

STREAM – Standard Tension Replenishment Alongside Method

SUADPS – Shipboard Uniform Automated Data Processing System

SUF – Suffix

SUPADD – Supplemental Address

SURF – Standard Underway Replenishment Fixture

SUS – Signals Underwater Sound

SUST – Sustainer Section

SVR – System Verification Review

SWIM – Ship Weapon Installation Manual

SWIT – Ship Weapons Integration Team

SWL – Safe Working Load

SWOS – Surface Warfare Officer's School

SWT – Surface Wide Transportation

SYDP – Six Year Defense Plan

SYSCOM – Systems Command

T&E – Test and Evaluation

TA – Tasking Authority

TA – Training Agent

TA/AS – Target Auxiliary/Augmentation System

TAC – Transportation Account Code

TACMAN – Tactical Manual

TADM-001 – Technical Documentation Accounting Module

TAE – Ammunition Ship

TALD – Tactical Air Launched Decoy

TALMIP – Tomahawk All-Up-Round Logistics and Maintenance Technical Information Product

TAMMS – Total Ammunition Movement Management System

TAMP – Tactical Air Missile Program

TAPL – Temporary Assignment of Personnel List

TASIG – Target Availability Support Improvement Group

TBM – Tactical Ballistic Missile

TBMD – Theater Ballistic Missile Defense

TC – Technical Change

TCAIMS II – Transportation Coordinator's Automated Information for Movement System II

TCC – Type Container Code

TCES – Technical Center for Explosives Safety

TCMD – Transportation Control and Movement Document

TCN – Transportation Control Number

TCRB – Targets Change Review Board

TCTO – Time Compliance Technical Order

TD – Target Detector

TD – Technical Directive

TD – Training Device

TDA – Technical Direction Agent

TDD – Target Detecting Device

TDGC – Technical Data Guidance Conference

TDM – Technical Data for Munitions

TDMO – Technical Data Management Officer

TDP – Technical Data Package

TDR – Transportation Discrepancy Report

TDS – Technical Directive System

TDS – Technology Development Strategy

TEC – Type Equipment Code

TECHEVAL – Technical Evaluation

TEMP – Test and Evaluation Master Plan

TER – Triple Ejector Rack

TEWG – Test and Evaluation Working Group

TFCF – Targeting and Fire Control Sub-System

TFOA – Things Falling Off Aircraft

TGO – Time-To-Go

Three-3M – Maintenance and Material Management

TIC – Technician-in-Charge

TIR – Transaction Item Report

TIVS – Thermally Initiated Venting System

TL – Team Leader

TLAM – Tomahawk Land Attack Missile

TLM – Telemetry System

TLM Code – Telemetry Code

TM – Team Member

TM – Technical Manual

TM/TO – Technical Manual/Technical Orders

TMDC – Type Maintenance Due Code

TMDER – Technical Manual Deficiency/Evaluation Report

TML – TOW Missile Launcher

TMMA – Technical Manual Maintenance Activity

TMMP – Technical Manual Maintenance Program

TMMT – Technical Manual Management Team

TMPP – Technical Manual Publication Program

TMR – Total Munitions Requirement

TMRS – Tactical Munitions Reporting System

TMS – Type Model Series

TO – Technical Order

TOC – Total Ownership Cost

TODO – Technical Order Distribution Office

TOL – Tailored Outfitting List

TOMA – Technical Order Management Agency

TOMIS – Tomahawk Missile Information System

TOO – Target of Opportunity

TOW – Tube Launched Optically Tracked Wire Guided Missile

TP – Target Practice

TPDR – Technical Publication Deficiency Report

TPFDD – Time Phased Force and Deployment Data

TPII+ – Track Point II Plus

TPL – Technical Publications Library

TPO – Technical Program Office

TPR – Target Performance Reporting

TPR – Test Problem Reports

TPS – Test Program Set

TPU – Torpedo Propulsion Unit

TR – Threat Report

TR – Transaction Report

TRA – Technology Readiness Assessment

TRANS – Transportation Processing (from CAIMS)

TRB – Tomahawk Record Book

TRC – Torpedo Readiness Certification

TRPPM – Training Planning Process Methodology

TRR – Test Readiness Review

TRS – Training Squadron

TS – Transition Section

TSC – Transition Section Computer

TSG – Target Seeker Group (Guidance Section)

TSG – Test Set Group

TSPR – Total System Performance Responsibility

TSRM – Third Stage Rocket Motor

TTCOR – Testing, Training and Current Operational Requirements

TTE – Technical Training Equipment

TTR – Testing and Training Requirements

TVA – Thrust Vector Actuator

TVC – Thrust Vector Controller

Two-2M – Miniature/Microminiature

TWP – Team Work Plan

TWS – Tomahawk Weapons System

TYCOM – Type Commander

UADPS – Uniform Automated Data Processing System

UADPS-SP – Uniform Automated Data Processing System – Stock Point

UHF – Ultra-High Frequency

UI – Unit of Issue

UIC – Unit Identification Code

UICP – Uniform Inventory Control Point

ULSS – Users Logistics Support Summary

UMMIPS – Uniform Material Movement and Issue Priority System

UN – United Nations

UND – Urgency of Need Designator

UNK – Unknown

UNO – United Nations Organization

UNREP – Underway Replenishment

URL – Uniform Resource Locator

USA – United States Army

USADACS – U.S. Army Defense Ammunition Center and School

USAF – United States Air Force

USATCES – U.S. Army Technical Center for Explosives Safety

USCG – U.S. Coast Guard

USD(AT&L) – Under Secretary of Defense for Acquisition, Technology, and Logistics

USMC – United States Marine Corps

USN – United States Navy

USTRANSCOM – United States Transportation Command

UTR – Undersea Tracking Range

UUT – Unit Under Test

UXO – Unexploded Ordnance

VDAR – Vendor Data Analysis Report

VEM – Versatile Exercise Mine

VER – Vertical Ejector Rack

VERTREP – Vertical Replenishment

VIDS – Visual Information Display System

VIDS/MAF – Visual Information Display System/Maintenance Action Form

VISTA – Visibility Information Storage Tool for Ammunition

VLA – Vertical Launch ASROC

VLS – Vertical Launching System

VT – Variable Time

WAFAR – Wrap Around Fin Ariel Rocket

WAM – Weapons Assembly Manual

WAT – Weapons Assist Team

WCT – Warhead Compatible Telemeter

WESS – Web-Enabled Safety System

WESTPAC – Western Pacific Operational Area

WGS/FNS – Wings and Fins

WHD – Warhead or Warhead Section

WHD/RM – Warhead/Rocket Motor

WHE – Weapons Handling Equipment

WIT – Watch Items

WMK – Winch Modification Kit

WMM – Waste Military Munitions

WO – Weapons Officer

WPN – Weapons Procurement, Navy (appropriation)

WPNSTA – Weapons Station

WPSE – Weapon Peculiar Support Equipment

WQAEC – Weapons Quality Assurance Evaluation Center

WQEC – Weapons Quality Engineering Center

WR – Work Request

WRA – Weapon Replaceable Assembly

WR-ALC – Warner Robins Air Logistics Center

WRAP – Warshot Reliability Action Panel

WRC – Warfighter Response Center

WRMR – War Reserve Material Requirement

WRR – Weapons Readiness Review

WRMR – War Reserve Munitions Requirements

WRSA – War Reserve Stock for Allies

WSE – Weapons Support Equipment

WSEP – Weapon System Evaluation Program

WSESRB – Weapons Systems Explosive Safety Review Board

WSF – Weapons Support Facility

WSFR – Weapon System Firing Report

WSPD – Weapons System Planning Documents

WSSP – Weapon System Supportability Plan

WSUP – Weapon System User Program

WTT – Weapons and Tactics Trainer

WUA – Work Unit Assignment

WUC – Work Unit Code

WWW/www – World Wide Web

XHD – Exercise Head Section

ZRF – Zero Retention Force

APPENDIX N

Definitions

APPENDIX N

Definitions

Above Ground Magazine – Any open area or any structure not meeting the requirements of an ECM that is used for explosives storage.

Above Ground Storage – Storage in magazines with or without earth cover or in open stacks at surface level.

Accelerated Aging – Accelerated Aging is the process of artificially aging an energetic material or component in order to predict how it will react in the real-world environment over a long period of time. For example; gun propellants are exposed to high levels of heat over a period of time to determine the effectiveness of the stabilizer remaining. This is akin to the Highly Accelerated Life Testing/Highly Accelerated Stress Screening process used in electronics.

Acceptance – Assumption of responsibility for any ordnance, weapons or weapons support equipment from another party. Provisional acceptance is the acceptance of ordnance, weapons or weapons support equipment from the manufacture for which certain obligations with respect to the item(s) have not yet been fulfilled by the contractor.

Accident – Any unplanned act or event which results in damage to property, material, equipment or cargo, or personnel injury or death when not the result of enemy action.

Acquisition/Collection – The obtaining of information in any manner, including direct observation, liaison with official agencies, or solicitation from official, unofficial, or public sources.

Activity –

a. A unit, organization, or installation performing a function or mission, e.g., reception center, redistribution center, naval station, naval shipyard.

b. A function, mission, action, or collection of actions. Also called ACT.

Administration Area – The area in which administrative buildings functioning for the installation as a whole are located. This excludes those offices located near and directly serving components of explosives storage and operating areas.

Administrative Chain of Command – The Chain of Command as determined by the administrative organization.

Administrative Commands (Type Commands) – The Commands that provide the Tactical Commands with the means to conduct tactical operations. Administration of training, supply, and repair of Fleet units are some of their responsibilities.

Aeronautical Equipment – The equipment used within the maintenance complex that contributes to the completion of the maintenance mission. It includes aircraft, SE, aviators' equipment, and other similar devices.

Aeronautical Equipment Service Record (AESR) – An insert to the basic aircraft logbook used as a service record for various aircraft equipment, such as bomb racks and gun systems.

Aerosol – A suspension of very small particles, either liquid or solid, in air. The particles are so small (less than 10 microns in diameter) that they remain suspended for considerable periods of time instead of settling out. Aerosols are an important form of dissemination for CW agents.

Agent Area – A location where chemical agents are stored, processed or otherwise handled. This may be a building, magazine, storage area, or outdoor storage or operating site.

Airborne Exposure Limit – The maximum time weighted average airborne concentration (milligram/cubic meter) of a chemical agent to which the Army Surgeon General has established that essentially all members of a specific population can be exposed for a specific period without adverse effect.

Airborne Mine Countermeasures (AMCM) – Aircraft weapons systems used to detect, and neutralize sea mines.

Aircraft Controlling Custodian (ACC) – A term applied to air commands and COMNAVAIRSYSCOM for exercising administrative control of assignment, employment, and logistic support of certain aircraft and aircraft systems as specified by the CNO. The following ACCs have been designated by CNO: COMNAVAIRLANT, COMNAVAIRPAC, CNATRA, COMNAVAIRESFOR, and COMNAVAIRSYSCOM.

Aircraft Intermediate Maintenance Department (AIMD) – The department of an aviation ship (CVN, LHA, LHD) or FRCs (ashore) are responsible for the check, test, repair, or manufacture of aeronautical components and SE for the supported aircraft.

Aircraft Logbook – A detailed service record maintained for each individual aircraft. See *Aeronautical Equipment Service Record (AESR)*.

Aircrew Escape Propulsion System – This term collectively represents rocket catapults and rocket motors used in aircrew escape propulsion systems.

Airframe Accessories – The items of equipment required for operation of the aircraft and not considered an integral part of the airframe or engine, such as wheels, brakes, hydraulic equipment, fuel systems, deicing equipment, anti-icing equipment, and other items regardless of whether attached to the engine or airframe.

All-up Missile – An all-up missile is one with all major components operationally joined, consisting of a warhead (explosive), propellant, guidance system, fuze, etc. An all-up missile may or may not be assembled with less hazardous components such as igniter, wings and fins, tracking flares, etc.

Allocation – In a general sense, distribution for employment of limited forces and resources among competing requirements. Specific allocations (e.g., air sorties, nuclear weapons, forces, and transportation) are described as allocation of air sorties, nuclear weapons, etc.

Allocation (Personnel) – The apportionment of personnel numbers to a program or program element of the Future Defense Plan (FDP).

Allowance Lists – Documents used to specify authorized requirements of operational support inventory for a squadron, IMA, or ship. The allowance is based on the activity's need for the item to perform its mission, the level of maintenance, and frequency of use.

Allowance Parts List (APL) – A listing of repair parts prepared for individual equipment and components.

Allowance Quantity – The inventory stocked at operational sites to support, remove, and replace maintenance actions.

Ammunition – A device charged with explosives, propellants, pyrotechnics, initiating composition or chemical material for use in connection with defense or offense including demolitions, training, ceremonial, or non-operational purposes.

Ammunition and Explosives – As used herein, ammunition and explosives include (but are not necessarily limited to) all items of ammunition; propellants, liquid and solid, high explosives; guided missiles; warheads; devices; pyrotechnics; chemical agents; their components, and associated substances, presenting real or potential hazards to life and property.

Ammunition and Explosives Area – An area specifically designated and set aside from other portions of an installation for developing, manufacturing, testing, maintaining, storing or handling of ammunition and explosives.

Ammunition Details – Accessories used in packing, handling, protecting, and inspecting of ammunition such as boxes, tanks, wads, fuze covers, identification tags, and safety clips.

Ammunition Lot – A quantity of homogeneous ammunition, identified by a unique lot number, which is manufactured, assembled, or renovated by one producer under uniform conditions and which is expected to function in a uniform manner.

Ammunition Lot Number – The code number that identifies a particular ammunition lot.

Ammunition Related Substances – Materials and substances, while not explosive substances, which are used as filler materials for ammunition or munitions or are used in the manufacture of ammunition and weapon systems. This includes chemical agents, inert filler materials and the many highly active chemicals and reactive materials used in explosive manufacture.

Ammunition Storage Unit – All types of explosives storage magazines including outdoor and indoor, open storage areas, sheds, bunkers, and earth-covered and above ground magazines.

Ammunition Terminal – An activity which has been approved for large quantity ammunition and explosives transfers to and from DON ships (particularly cargo ammunition ships).

Anchorage – A specified location for anchoring or mooring a vessel in-stream or offshore. Also see *Scuttling Site* and *Explosives Anchorage*.

Appropriation Purchase Account – An investment funded account of material procured with funds appropriated by Congress (e.g., WPN). An investment-funded item is normally a repairable that is requisitioned by an operating activity for eventual use but will be returned to the supply system for restoration when it is no longer serviceable. Investment-funded items are issued to authorized users at no cost.

Approved – Complying with the provisions of this manual, with other instructions, and regulations as issued by higher authority or command, or with regulations of other authorized agencies specifically referred to in this manual.

Armament Weapons Support Equipment (AWSE) – Any equipment used in the loading of an explosive system or launch device on an aircraft. AWSE consists of all the equipment included in the terms armament SE, WSE, and logistics SE.

Armed – A fuze is considered armed when any firing stimulus can produce fuze function.

a. A fuze employing explosive train interruption is considered armed when the interrupters position is ineffective in preventing propagation of the explosive train at a rate equal to or exceeding 0.5 percent at a confidence level of 95 percent.

b. A fuze employing non-interrupted explosive train is considered armed when the stimulus available for delivery to the initiator equals or exceeds the initiator's maximum no-fire stimulus.

Article (Equipment or End Item) – Components, assemblies, subassemblies, and parts connected or associated together to perform an operational function.

Audit – As applied to QA, a periodic evaluation of detailed plans, policies, procedures, products, directives, and records.

Automatic Distribution – The action that provides initial distribution of publications to newly activated aircraft squadrons or ships and that provides definite follow-on distribution of supplementary publications, for example, changes, revisions, or supplements, to the recipients of the publications on initial distribution or to authorized requesters.

Auxiliary Building – Any building accessory to or maintained and operated to serve an operating building, line, plant, or pier area. Explosive materials are not present in an auxiliary building. Examples: power plants and change houses, paint and solvent lockers, and similar facilities.

Aviation Activity – A formally structured staff, command, squadron, unit, or detachment headed by a Commander, CO, or OINC responsible for management, maintenance, material, and logistic support of Naval aeronautical equipment.

Aviation Capable Ship – A non-aviation ship that can be used as an aviation operating platform.

Aviation Ship – Specifically CVN, LPD, LHA, and LHD and type ships are designated, for NOMP purposes, as aviation ships.

Backup Storage Area – An area, which may be located on or off an installation, used for storing ammunition and explosives that arrive at the port at a time when such material cannot be handled for a considerable period of time at the pier or wharf. It provides storage space for a reserve of explosives and ammunition to sustain operations at the pier or wharf when shipments to or from the port are behind schedule.

Bag Ammunition – Gun ammunition in which the ignition charge and the propelling charge are contained in a laced bag made of powder bag cloth, and this unit and the projectile and primer are loaded separately into the gun.

Barge Unit – See *Ship or Barge Units*.

Barricade – An intervening barrier, natural or artificial, of type, size, and construction intended to limit the effect of an explosion on nearby buildings or exposures.

Barricaded – The condition wherein an effective barricade exists between magazines, operating buildings, stacks, or other buildings opposed one to another.

Barricaded Siding – A dead-end railroad or highway spur that is barricaded from adjacent sidings or buildings. It is used for the temporary storage of ammunition and explosives-loaded trucks or railcars.

Battle Force Intermediate Maintenance Activity (BFIMA) – Repair/maintenance of components and repair assets belonging to units assigned to the battle force during a deployment cycle as resourced by the TYCOM. It is not intended to substitute Depot level maintenance work/activity previously provided by tender support.

Bench Check – A physical inspection or functional test of an item removed for an alleged malfunction to determine if the part or item is serviceable or repairable. It also includes a determination of the extent of maintenance, repair, or possible overhaul required to return it to serviceable status.

Bench Test – The subjection of aircraft equipment, to prescribed conditions and specifications, with the use of shop test equipment, to ensure proper functioning.

Beyond Capability of Maintenance (BCM) – A term/code used by IMAs when repair is not authorized at that level or when an activity is not capable of accomplishing the repair because of a lack of equipment, facilities, technical skills, technical data, or parts. BCM will also be used when shop backlog precludes repair within time limits specified by existing directives.

Binary Munitions – Ammunition which contains two or more chemicals that remain separated until use. The ammunition is not lethal or explosive until mixed on demand or by shock (setback or impact).

Blank Ammunition – Ammunition that consists of a cartridge case with primer and powder charge but which does not contain a projectile Blank ammunition is used for simulated fire, for signaling, and for training exercises.

Blast Impulse – The product of the overpressure from the blast wave of an explosion and the time during which it acts at a given point (that is, the area under the positive phase of the overpressure versus time curve).

Blast Overpressure – The pressure, exceeding the ambient pressure, manifested in the shock wave of an explosion.

Blasting Cap – Blasting caps are classified in accordance with the method of initiation. There are two types of blasting caps:

a. Non-electric (fuse) cap. An open-ended metal shell contains pressed charges of primary and secondary (detonating) explosives. To assemble the cap with the next part of the explosive train, a black powder fuse, or detonating cord, is inserted carefully into the open end against the initiating charge and crimped in place.

b. Electric cap. A sealed metal or plastic shell contains the detonating charge, and an electric firing element. Electric caps may be of the instantaneous or time-delay type.

Bomb-Type Ammunition – Ammunition that is characterized by a large high-explosive charge-to-weight ratio such as aircraft bombs, warheads, guided missiles, depth charges, and mines that are designed for dropping, launching, or planting. This type of ammunition depends on the destructive blast effect of the explosive at or near the target rather than the penetrative effect of the explosive container.

Booster Explosive – An explosive material with sensitivity intermediate between that of a primary explosive and a main-charge explosive. It is used to transmit and augment the detonation reaction (initiated by the primary explosive) with sufficient energy to reliably initiate a stable detonation reaction in the main-charge. Examples of booster explosives are H-6, Tetryl and PBXN-5.

Bravo Flag – A red flag that flies at a facility when explosives and personnel are present.

Breakdown – The separation of a complete round of ammunition or subassembly into its components or separate parts; the removal of one or more components from a round.

Bridge – The electrically resistive wire (originally a bridge-wire) in which the electrical energy is converted to heat in an electro-explosive device. Elements of other forms than wire, such as films, foil, ribbons, etc., are used and referred to as bridges of such devices.

Brisance – The shattering power of an explosive. Brisance is the measure of the kind of work an explosive will do and is usually dependent upon and indicated by the velocity of the explosive reaction.

Bulletin – A document issued by COMNAVAIRSYSCOM which directs a one-time inspection of equipment, contains related instructions, and disseminates administrative or management information as related to maintenance of weapon systems.

Burning – A chemical reaction in which the output of heat is sufficient to enable the reaction to proceed and be accelerated without input of heat from another source. Burning is a surface phenomenon with the reaction products flowing away from the unreacted material along the surface at subsonic velocity. Confinement of the reaction increases pressure, rate of reaction and temperature, and may cause transition into deflagration. If burning occurs within a munition, this is the least violent type of explosive event. The energetic material-ignites and burns, non-propulsively. The case may open, melt or weaken sufficiently to rupture nonviolently, allowing mild release of combustion gases. Debris stays mainly within the area of the fire. This debris is not expected to cause fatal wounds to personnel or be a hazardous fragment beyond 15 m.

Burning Area – The site at which ammunition and explosives are disposed of by burning.

Calibrate – To determine and make required corrections in calibration standards or PME. It consists of the comparison of two instruments, one of which is a certified calibration standard of known accuracy, to detect and adjust any discrepancy in the accuracy of the other instrument or PME being compared with the certified calibration standard.

Calibration – The process by which calibration installations compare a calibration standard or PME with a standard of higher accuracy to ensure the former is within specified limits throughout its entire range. The calibration process involves the use of approved instrument calibration procedures.

Calibration Interval – The maximum length of time between calibrations that calibration standards or PME are expected to maintain reliable measurement capability.

Canister Launchers – Some varieties of Surface-to-Surface Missiles are received, handled, and stowed shipboard in a ready-to-fire condition within individual cylindrical canisters. The canisters are secured in clusters to fixed launcher structures that are oriented to the predetermined firing angles. Each canister has fire-through end closures and is connected to the shipboard firing system through umbilical connectors.

Cannibalization/Cannibalize – To remove serviceable parts from one item of equipment in order to install them on another item of equipment.

Carcass – An unserviceable repairable item.

Cargo Ammunition Ships – The following vessels, when carrying ammunition and explosives as cargo, are cargo ammunition ships:

a. Fleet cargo ammunition ships (AOE, T-AOE, T-AE, T-AFS, T-AK and T-AO class and maritime prepositioned ships).

b. Tenders (AD and AS classes).

c. Military Sealift Command chartered ships.

d. Any ship entering a DON controlled port.

e. Any DON controlled ship regardless of location.

f. Lighters and barges.

Carrier, common (commercial) – A company engaged in the business of transporting persons or property for compensation and for all persons impartially.

Cartridge – A complete round of ammunition in which the primer, propelling charge and projectile or bullet are completely assembled to the cartridge case as fixed ammunition; or the primer and the propelling charge are assembled in the cartridge case and closed by a friable plug.

Cartridge Actuated Device (CAD) – Small explosive devices used to eject stores from launched devices, actuate other explosive systems, or provide initiation for aircrew escape devices.

Cast Propellant – A solid propellant charge produced from a quantity of casting powder or composite propellant and configured into a grain so as to possess certain desired burning characteristics.

Castable – A term signifying an explosive (e.g., TNT) with a melting point low enough, compared to that at which significant decomposition occurs, that is safe and practical to melt

and cast into a casting fixture. A term also signifying an explosive (e.g., PBX-100 series) of sufficiently low viscosity (usually less than 15 kilopoise) to transport from the mixing vessel to a casting fixture with a reasonably low driving force (usually less than 30 psig).

Casting House – A building in which explosives are cast into warhead housing, mold, etc.

Casting Powder – A granular mixture of colloidized nitrocellulose (single-base) or nitrocellulose and nitroglycerine (double-base) used in ammunition propelling charges.

Catalog of Navy Training Courses (CANTRAC) (NAVEDTRA 10500) – Contains information on schools and courses under the purview of CNET, Amphibious Forces, Atlantic and Pacific, and other Navy training commands. The function of CANTRAC is to provide a consolidated, centrally produced catalog, presenting courses in standardized form.

Caution – An operating condition, procedure, practice, etc., which if not strictly observed, may damage equipment.

Cavern Storage Site – A natural cavern or former mining excavation adapted for the storage of ammunition and explosives.

Ceiling Value – The concentration of chemical agent that must not be exceeded for any period of time.

Certification – A formal, documented declaration that an individual, by virtue of management review, has met all of the qualification requirements established to perform a task.

Change – A modification to existing policies or procedures. Usually identified in manuals by revision bars in the margins.

Change House – A building provided with facilities for employees to change to and from work clothes. Such building may be provided with sanitary facilities, drinking fountains, lockers and eating facilities.

Charge – The quantity of explosive used in a munition or component thereof. The charge is usually confined by a case, but when no confinement is used, it is usually called a bare charge.

Chemical Agent – A chemical substance which is intended for use in military operations to kill, seriously injure, or incapacitate mainly through its physiological effects. The term excludes riot control agents when used for law enforcement purposes, herbicides, smoke, and flames.

Chemical Ammunition – Chemical ammunition includes a variety of items, the effect of which depends primarily upon the chemical agent filling rather than upon explosives or shrapnel, even though an explosive or ignition element is required to activate the ammunition. Included in this category are projectiles, bombs, shells, grenades, rockets, mines, aircraft spray tanks, and any other containers or devices used to disperse chemical agents.

Chemical Decontamination – The process of making any contaminated object, person, or area safe for unprotected personnel by chemically destroying, physically removing, sealing in, or otherwise making harmless the chemical agent on or around it. (In general, only areas or material contaminated by agents which have a long duration of effectiveness need be decontaminated, since agents with a short duration of effectiveness are quickly evaporated.)

Chemical Munitions – See *Chemical Agent*s.

Chemical Weapon – Together or separately, (a) a toxic chemical and its precursors, except when intended for a purpose not prohibited under the Chemical Weapons Convention; (b) a munition or device, specifically designed to cause death or other harm through toxic properties of those chemicals specified in (a), above, which would be released as a result of the employment of such munition or device; (c) any equipment specifically designed for use directly in connection with the employment of munitions or devices specified in (b), above.

Classification Yard – A railroad yard used for receiving, dispatching, classifying and switching railcars.

Classroom Training – Training conducted in a classroom environment using only inert ammunition.

Center for Naval Aviation Technical Training (CNATT) – An organization under the military command of CNET responsible for providing, by means of the CNATTUs, technical training for officers and enlisted personnel in the operation, maintenance, and repair of air weapons systems and associated equipment; and for conducting such other training as the CNO may direct.

Center for Naval Aviation Technical Training Unit (CNATTU) – A group of instructors equipped with naval air maintenance trainer(s), training aids, lesson guides, and training literature. Naval Air Training and Operating Procedures Standardization.

Cold Iron – The status of a ship that has shut down its main power plant and is dependent on shore power. A ship in cold iron is not capable of providing immediate propulsion.

Combat Aircraft Loading/Parking Area – Any area specifically designated for:

a. Aircraft loading or unloading of combat configured munitions.

b. Parking aircraft loaded with combat configured munitions.

Combatants – All DON controlled ships not classified as explosives support ships, i.e., all ships which do not carry cargo ammunition.

Commanding Officer or Officer-in-Charge – The title of the Senior Officer at Naval/Marine Corps Activity who is responsible for the operation and maintenance of his activity.

Common Servicing – That function performed by one Military Service in support of another Military Service for which reimbursement is not required from the Service receiving support.

Common Support Equipment (CSE) – Comprised of only those general purpose items supplying or measuring broad parameters of physical properties that are known to be established in the using service's inventory, for example, ground electrical, pneumatic, and hydraulic power units; towing, hoisting, and fueling devices; signal generation devices; and voltage, amperage, and phase measuring devices. The application of SE items to other end items, systems, or components does not in itself justify or classify the items as CSE. CSE is divided as Avionics SE (common and peculiar) and Non-Avionics SE (common and peculiar).

Compatibility – Ammunition or explosives are considered compatible if they may be stored or transported together without significantly increasing either the probability of an accident or, for a given quantity, the magnitude of the effects of such an accident.

Complete Round – A term applied to an assemblage of explosive and nonexplosive components designed to perform a specific function at the time and under the conditions desired. Examples of complete rounds of ammunition are: a. separate loading, consisting of a primer, propelling charge and, except for blank ammunition, a projectile and a fuze; b. fixed or semifixed, consisting of a primer, propelling charge, cartridge case, a projectile and, except when solid projectiles are used, a fuze; c. bomb, consisting of all component parts required to drop and function the bomb once; d. missile, consisting of a complete warhead section and a missile body with its associated components and propellants; and e. rocket, consisting of all components necessary to function.

Component –

a. One of the subordinate organizations that constitute a joint force. Normally a joint force is organized with a combination of Service and functional components.

b. In logistics, a part or combination of parts having a specific function, which can be installed or replaced only as an entity.

Compressed Gas – Any material or mixture having in its container either an absolute pressure exceeding 40 psi at 70 degrees Fahrenheit, or an absolute pressure exceeding 140 psi at 130 degrees Fahrenheit, or both; or any liquid flammable material having a Reid vapor pressure exceeding 40 psi absolute at 100 degrees Fahrenheit. Such materials are classified as flammable compressed gases if a mixture of 13 percent or less (by volume) with air forms a flammable mixture or if the flammability range with air is greater than 12 percent regardless of the lower limit.

Condition Based Maintenance Plus (CBM) – CBM the application and integration of appropriate processes, technologies, and knowledge based capabilities to improve the reliability and maintenance effectiveness of DOD systems and components. At its core, CBM+ is maintenance performed on evidence of need provided by reliability centered maintenance (RCM) analysis and other enabling processes and technologies. CBM+ uses a systems engineering approach to collect data, enable analysis, and support the decision-making processes for system acquisition, sustainment, and operations.

Conditional Exemption – An exemption from the regulatory definition of hazardous waste (and therefore from compliance with specific environmental requirements pertaining to the storage of hazardous waste) conditioned on compliance with certain criteria requirements as set forth in 40 CFR 266.205.

Configuration – The functional and physical characteristics of material as described in technical documents and achieved in a product.

Configuration Item List – A list of those status items designated for configuration control and configuration accounting.

Configuration Item(s) – Item(s) designated by DOD components for configuration management. They may differ widely in complexity, size, and kind. Examples are an aircraft, ship, mobile

test unit, navigation system, embedded computer, computer program, facility, electronic system, test meter, or a round of ammunition.

Configuration Management (CM) – A discipline applying technical and administrative direction and surveillance to: (1) identify and document the functional and physical characteristics of a configuration item; (2) control changes to those characteristics; and (3) record and report changes to processing and implementation status.

Consolidated Shipboard Allowance List (COSAL) – Both a technical and a supply document tailored to suit an individual ship or MAG material support requirements.

Consumable Item – Any item or substance which, upon installation, loses its identity and is normally consumed in use or cannot be economically repaired.

Container – An article of transport equipment that meets American National Standards Institute/ International Organization for Standardization standards that is designed to be transported by various modes of transportation. These containers are also designed to facilitate and optimize the carriage of goods by one or more modes of transportation without intermediate handling of the contents and equipped with features permitting ready handling and transfer from one mode to another. Containers may be fully enclosed with one or more doors, open top, refrigerated, tank, open rack, gondola, flatrack, and other designs.

Contaminants – Particles of foreign material which may or may not be visible to the unaided eye.

Contaminated Area – An area where a toxic chemical agent has been released and is present in any form.

Continuous Process Improvement (CPI) – The DOD's strategic approach for developing a culture of continuous improvement in the areas of reliability, process cycle times, costs in terms of less total resource consumption, quality, and productivity. In the DOD, CPI comprises the application of a broad range of tools and methods, such as Lean, Six Sigma, and Theory of Constraints, as cited in "The DOD Continuous Process Improvement (CPI) Transformation Guidebook".

Contract Maintenance – The maintenance of material by commercial organizations without distinction as to levels of maintenance accomplished and maintenance accomplished by private industry in government-owned, contractor-operated plants; contractor owned, contractor operated plants; or by contract field teams.

Controlled by the Armed Forces of the United States – Handled, stored, or shipped by, for or to the Armed Forces of the United States.

Controlling Custodian – Air Commands and COMNAVAIRSYSCOM Fleet support units exercising administrative control of assignment, employment, and logistic support of certain aircraft and engines, as specified by the CNO.

Controlling Custody – Administrative control of the assignment, logistic support, employment, and responsibility to account for and provide information about the aircraft or SE.

Cook-Off – Any reaction of ammunition caused by the absorption of heat from its environment. In loaded guns it consists of the accidental and spontaneous discharge of, or explosion in, the

gun caused by an overheated chamber or barrel igniting a fuze, propellant charge, or bursting charge. Cook-off may also occur in explosive-loaded components when they are exposed to excessive heat or flame wash from any source, such as live steam, fire, rocket or gas turbine exhaust.

Correction – A modification and punctuation, grammar, capitalization, spelling, syntax, or tense and typographical errors, word omissions, or ambiguities not affecting policies or procedures.

Corrective Maintenance – The actions performed to restore an item to a specified condition.

Crack – Any narrow break or tear of material in which material is neither displaced as a dent nor removed by a gouge.

Cross Servicing – A subset of common-user logistics in which a function is performed by one Military Service in support of another Military Service and for which reimbursement is required from the Service receiving support.

Data Storage Set – Monitors the operational status of aircraft weapon systems and other components. The monitoring of weapon systems and other components is accomplished by a combination of instrumentation sensors and built-in-test of selected systems.

Defect – Any nonconformance of the unit or product with specified requirements. Defects will normally be grouped into one or more of the following classes but may be grouped into other classes or subclasses within these classes:

a. Defect, Critical – A defect that constitutes a hazardous or unsafe condition, or as determined by experience and judgment could conceivably become so, thus making the aircraft unsafe for flight or endangering operating personnel.

b. Defect, Major – A defect, other than critical, that could result in failure or materially reduce the usability of the unit or part for its intended purpose.

c. Defect, Minor – A defect that does not materially reduce the usability of the unit or part for its intended purpose or is a departure from standards but which has no significant bearing on the effective use or operation of the unit or part.

Deflagration – A rapid chemical reaction in which the output of heat is sufficient to enable the reaction to proceed and be accelerated without input of heat from another source. Deflagration is a surface phenomenon with the reaction products flowing away from the unreacted material along the surface at subsonic velocity. The effect of a true deflagration under confinement is an explosion. Confinement of the reaction increases pressure, rate of reaction and temperature, and may cause transition into a detonation. If deflagration occurs within a munition, ignition and deflagration of the confined energetic materials leads to nonviolent pressure release as a result of a low strength case or venting through case closures (loading port/fuze wells, etc.). The case might rupture but does not fragment; closure covers might be expelled, and unburned or burning energetic material might be thrown about and spread the fire. Propulsion might launch an unsecured test item, causing an additional hazard. No blast or significant fragmentation damage to the surroundings; only heat and smoke damage from the burning energetic material.

Delay – A delay is an explosive train component which introduces a controlled time delay in the functioning of the train.

Demilitarize – To render ammunition and explosive innocuous or ineffectual for military use.

Demolition Area – An area specifically designated and reserved for destroying explosives and explosive-loaded devices.

Demolition Material – Explosives and accessories used for blasting, eliminating hazards to navigation and obstacles to amphibious landing, or for destroying equipment.

Dent – Any narrow depression that changes surface continuity, but does not involve removal of metal/paint or penetration of the surface.

Department of the Navy (DON) – The executive part of the Department of the Navy at the seat of government; the headquarters, U.S. Marine Corps; the entire operating forces of the U.S. Navy and of the U.S. Marine Corps, including the Reserve Components of such forces; all field activities, headquarters, forces, bases, installations, activities, and functions under the control or supervision of the Secretary of the Navy; and the U.S. Coast Guard when operating as a part of the Navy pursuant to law.

Department of Transportation (DOT) Regulations – Latest issue of regulations issued by the DOT for the transportation of ammunition, explosives, and other hazardous materials.

Depot Level Repairable – A repairable item of supply that may be repaired at designated levels of maintenance, but can be condemned only at the Depot level, or at the direction of the depot maintenance activity.

Depot Maintenance – That maintenance performed on materiel requiring major overhaul or a complete rebuild of parts, assemblies, subassemblies, and end-items, including the manufacture of parts, modifications, testing, and reclamation as required. Depot maintenance serves to support lower categories of maintenance by providing technical assistance and performing that maintenance beyond their responsibility. Depot maintenance provides stocks of serviceable equipment by using more extensive facilities for repair than are available in lower level maintenance activities.

Designated Aircraft Parking Area – An aircraft parking area that meets airfield parking criteria.

Designated Overhaul Point – An activity (including an activity of another service or a contractor) designated to perform the highest (Depot) level of maintenance or condemnation in a particular item or group of items.

Designated Repair Point – A Depot level rework facility assigned the technical and repair responsibility for designated weapon system(s).

Designated Rework Point (DRP) – A Depot level rework facility assigned the technical and rework responsibility for designated weapon system(s).

Designated Support Point (DSP) – A supply activity, such as a Naval Supply Center, assigned to provide supply support to a designated overhaul point.

Detachment – A temporary reporting custodian formed with aircraft assigned from a parent squadron or unit. Detachments are established when a squadron deploys one or more aircraft to a ship or base substantially removed from the location of the parent organization; the parent squadron CO feels that it would be impractical to retain reporting custody of the aircraft so deployed. Detachments have the same responsibilities, with respect to the requirements of this manual, as all other reporting custodians of aircraft.

Detonation – A violent chemical reaction within a chemical compound or mechanical mixture evolving heat and pressure. A detonation is a reaction which proceeds through the reacted material toward the un-reacted material at a supersonic velocity (by a shock wave process). The result of the chemical reaction is exertion of extremely high pressures on the surrounding medium forming a propagating shock wave which is originally of supersonic velocity. This is the most violent type of explosive event, whether occurring within a munition or in bulk material. A supersonic decomposition reaction propagates through the energetic material to produce an intense shock in the surrounding medium, air or water for example, and very rapid plastic deformation of metallic cases, followed by extensive fragmentation. All energetic material will be consumed. The effects will include large ground craters for munitions on or close to the ground, holing/plastic flow damage/fragmentation of adjacent metal plates, and blast overpressure damage to nearby structures.

Detonator – A device containing a sensitive explosive intended to produce a detonation wave.

Deviation –

a. The distance by which a point of impact or burst misses the target.

b. The angular difference between magnetic and compass headings.

Direct Maintenance – That effort expended by maintenance personnel in the actual performance of maintenance on aircraft, aeronautical equipment, or SE per the applicable technical manual. It applies equally to both contractor and GFE.

Directive –

a. A military communication in which policy is established or a specific action is ordered.

b. A plan issued with a view to putting it into effect when so directed, or in the event that a stated contingency arises.

c. Broadly speaking, any communication which initiates or governs action, conduct, or procedure.

Dividing Wall – A wall designed to prevent, control or delay propagation of an explosion between quantities of explosives on opposite sides of the wall.

Dock – An artificial basin or natural waterway, including the piers enclosing the basin, in which vessels may remain afloat when berthed at a pier or wharf.

Document – Specifications, lists, drawings, sketches, standards, pamphlets, reports, or other information relating to design, procurement, manufacture, test, or inspection of items or services under a contract. Also, in the MDS, any forms used to collect data at its source for conversion to machine records.

DOD Operations/Storage – Explosives operations conducted by DOD, or other federal agency, under DOD oversight, procedure, or control and in accordance with the explosives safety standards of 6055.9-STD. This term is applicable only to DOD and federal explosives operations, and to non-DOD commercial enterprises directly supporting DOD and federal explosives contractual efforts.

Dolphin – A mooring post or posts on a wharf or quay.

DOT Class – A category of materials classified by DOT based on the character and predominance of the associated hazards and of the potential for causing personnel casualties or property damage. The hazard classes are Explosives A, B, and C; Blasting Agent; Flammable Liquid; Flammable Solid; Combustible Liquid; Flammable Gas; Nonflammable Gas; Oxidizer; Organic Peroxide; Corrosive Material; Poisons A and B; Irritating Material; Radioactive Material; Etiological Agent; ORM-A, ORM-B, ORM-C and ORM-D. Refer to Bureau of Explosives Tariff No. BOE-6000, 49 CFR 173 for definitions.

Double-Base Powder – A casting powder whose principal explosive ingredients are nitroglycerine and nitrocellulose.

Drill Ammunition – Inert ammunition which may have working mechanisms or cutaways and is used for training.

Dud – Explosive munition which has not been armed as intended or which has failed to explode after being armed.

Earth-Covered Magazine (ECM) – Any earth-covered structure that meets soil cover depth and slope requirements of NAVSEA OP 5 Volume 1. ECM has three possible structural strength designations (7-Bar, 3-Bar, or undefined). The strength of an ECM's headwall and door(s) determines its designation.

Electric Blasting Cap – An electric detonator intended for initiation of dynamite Primacord, etc., in commercial blasting and military demolition and blasting operations. Used to initiate detonations in some experimental work.

Electric Primer – An electro-explosive device designed to initiate burning or deflagration of pyrotechnic, propellant, or explosive. Some detonators have been designed as primers (e.g., Primer Mk 124).

Electro-Explosive Device – An explosive or pyrotechnic component that initiates an explosive, burning, electrical, or mechanical train and is activated by the application of electrical energy.

Electromagnetic Radiation – Radiation made up of oscillating electric and magnetic fields and propagated with the speed of light. Includes gamma radiation, X-rays, ultraviolet, visible, and infrared radiation, and radar and radio waves.

Electrostatic Discharge – The discharge of the electrostatic charge which accumulates on ungrounded surfaces (including those of human bodies, vapor droplets and dust particles). Such discharges can be transmitted across air gaps as sparks, which can initiate reactions of explosive vapors, dust, and finely divided explosives. They can also initiate an electro-explosive device in its normal mode, if transmitted through the bridge or by dialectric breakdown between the bridge system and the case.

Empty Ammunition – An ammunition item or component that does not contain explosive material or inert material. Empty ammunition items and components include:

a. Ammunition items or components that were manufactured empty or without the components that contain the explosive material.

b. Ammunition items or components that have had their explosive material completely removed by disassembly, firing, thermal treatment or other means.

End Item – A final combination of end products, component parts, and/or materials that is ready for its intended use, e.g., ship, tank, mobile machine shop, or aircraft.

Energetic Liquid – A liquid, slurry, or gel, consisting of or containing an explosive, oxidizer, fuel, or combination of the above, that may undergo, contribute to, or cause rapid exothermic decomposition, deflagration, or detonation.

Energetic Material – See *Hazardous Material*.

Engineering Change Proposal (ECP) – A term that includes both a proposed engineering change and the documentation by which the change is described and suggested.

Engineering Controls – Regulation of facility operations through the use of prudent engineering principles; e.g., facility design, operational sequencing, equipment selection and process limitations.

Enlisted Aviation Maintenance Personnel Training and Qualification Jacket – A standardized official record that provides a repository for the accumulation of training for enlisted Marines engaged in aviation maintenance.

Enterprise Health Management (EHM) – EHM is the use of CBM+ systems as a tool for managing the systems population.

Equipment – In logistics, all nonexpendable items needed to outfit or equip an individual or organization.

Equipment Allowance Lists – A generic term indicating the publications, or sections thereof, that prescribe the equipment and weapons authorized for military organizations.

Essential Personnel – Personnel whose duties require them to remain within an ESQD arc for one or more of the following reasons:

a. Direct involvement in an ammunition and explosives handling operation.

b. Normal import ship-keeping duties by assigned personnel.

c. Provision of mission-required in-port services.

d. Provision of mission-related repairs and/or tests to in port ships.

e. Essential personnel do not include vendors, commercial delivery vehicles (unless carrying mission-related materials), dependents or non-DOD personnel except as categorized above.

Establishment – An installation, together with its personnel and equipment, organized as an operating entity.

Event Waiver – A deviation approved on a case by case basis for a particular evolution, issued for a limited period to meet a specific, non-recurring readiness or operational requirement which cannot otherwise be satisfied.

Exemption – A deviation from mandatory explosives safety requirements approved for the purpose of long-term satisfaction of recurring readiness or operational requirements. Except in certain cases where authorization to purchase real estate for sufficient ESQD clearances has not been granted, where it is in the best interest of the U.S. to grant agricultural leases of encumbered land, or where a significant impairment of the defense posture of the U.S. would result, a positive program for eventual correction of the deficiency must be planned and in the process of being carried out. Exemptions are generally issued for a maximum of 5 years, but will not be granted for a period in excess of that estimated for correction of the deficiency.

Exercise Ammunition – See *Practice Ammunition*.

Expeditious Repair (EXREP) – The processing for repair of NIS or NC components (repairable or consumable). These components must be in support of, or related to, a non mission or partial mission capable aircraft, situation. This processing is accomplished by the immediate removal of the component from the aircraft, expedited delivery and induction for repair, and the earliest return to RFI status for supply issue under the standard material issue priority system.

Expendable Supplies and Materials – Supplies that are consumed in use, such as ammunition, paint, fuel, cleaning and preserving materials, surgical dressings, drugs, medicines, etc., or that lose their identity, such as spare parts, etc.

Exploding Bridgewire – A term used to describe an electro-explosive device (usually a detonator) of which the most sensitive explosive is too insensitive to be initiated, except when the bridge-wire is caused to explode by a discharge of sufficient energy and power to raise its temperature above its vapor point before it has time to expand significantly.

Explosion – A violent chemical reaction within a chemical compound or mixture or mechanical mixture evolving heat and pressure. An explosion is a reaction that proceeds through the reacted material toward the un-reacted material at sonic velocity (by a shock wave process). The result of the chemical reaction is exertion of high pressure on the surrounding medium, forming a propagating shock wave. Ignition and rapid reaction of the confined energetic material builds up high local pressures leading to violent pressure rupturing of the confining structure. Metal cases are fragmented (brittle fracture) into large pieces that are often thrown long distances. Un-reacted and/or burning energetic material is also thrown about. Fire and smoke hazards will exist. Air shocks are produced that can cause damage to nearby structures. The blast and high velocity fragments can cause minor ground craters and damage (breakup, tearing, gouging) to adjacent metal plates. Blast pressures are lower than for a detonation.

Explosion Hazard – The hazard resulting from the tendency of certain materials to detonate en masse or burn with violence, causing destruction and damage or propagating explosions from one explosive site to another by blast wave or flying fragments.

Explosion Proof – When used in connection with electrical equipment, indicates that such equipment is enclosed in a case which is capable of withstanding an internal burning or

explosion of elements contained inside the case and preventing ignition by spark, flash, or explosion of any outside gas or vapor surrounding the enclosure.

Explosive (or Explosive Substances) – A substance, or mixture of substances, which is capable, by chemical reaction, of producing gas at such a temperature, pressure and rate as to be capable of causing damage to the surroundings. This general term "explosive" thus includes all solid and liquid materials variously known as high-explosives, propellants and pyrotechnics. Fuel-air explosives and explosives composed of liquid fuels and oxidants are included, when included in munitions, even though the individual components may not be explosive. Included are pyrotechnic substances, even though some may not produce reaction gases.

Explosive Accident – See *Explosive Mishap*.

Explosive Equivalent – The amount of a standard explosive which, when detonated, will produce a blast effect comparable to that which results at the same distance from the detonation or explosion of a given amount of the material for which performance is being evaluated. It is usually expressed as a percentage of the total net weight of all reactive materials contained in the item or system. In most instances TNT is used for comparison.

Explosive Event – Any event involving conventional ordnance, ammunition, explosives, explosive systems and devices resulting in an unintentional detonation, firing, deflagration, burning, launching of ordnance material (including all ordnance impacting off-range), leaking or spilled propellant fuels and oxidizers (less OTTO fuel II), or chemical agent release. Even if an ordnance system works as designed, and human error contributed to an event. This pertains to all events that do not meet the severity classification of class A, B or C (Explosive Mishap). See Volume I, Chapter 4.6. for further details.

Explosive Incident – See *Explosive Mishap*.

Explosive Hazard – Any hazard containing an explosive component. Explosive hazards include unexploded explosive ordnance (including land mines), booby traps (some booby traps are nonexplosive), improvised explosive devices (which are an improvised type of booby trap), captured enemy ammunition, and bulk explosives.

Explosive Limit – The maximum quantity of explosives or ammunition permitted in a magazine, production building, or other specified site. Explosive limits are based on quantity-distance damage considerations and are expressed in net pounds of explosive, number of rounds or units, or other measuring units. Also called Explosive Quantity.

Explosive Material – Any chemical material with hazard producing characteristics that is loaded into ammunition and/or ammunition components. This includes (but is not limited to) explosives, propellants, white phosphorous, incendiary mixtures, pyrotechnic mixtures, tracer mix, toxic materials, and riot control agents.

Explosive Mishap – An accident or incident involving conventional ordnance, ammunition, explosives, explosive systems and devices resulting in an unintentional detonation, firing, deflagration, burning, launching of ordnance material (including all ordnance impacting off-range), leaking or spilled propellant fuels and oxidizers (less OTTO fuel II), or chemical agent release. Accidents and incidents defined as explosive mishaps and meeting a severity classification of class A, B or C, will be reported using an Explosive Mishap Report (EMR), even if an ordnance

system works as designed, and human error contributed to an incident or accident. Explosive Mishaps will be reported in accordance with OPNAVINST 5102.1D. See Volume I Chapter 4.6 for further details.

Explosive Operation – An explosive operation is one that involves the use (or presence) of an explosive (sub-milligram to multi-kilogram weight range). Examples of explosive operations which might be conducted under the scope of this document include the following: chemical synthesis, preparation of formulations, chemical analysis, chemical and/or physical characterization, laboratory testing, firing chamber or bomb proof testing, and field testing.

Explosive Ordnance – All munitions containing explosives, nuclear fission or fusion materials, and biological and chemical agents. This includes bombs and warheads; guided and ballistic missiles; artillery, mortar, rocket, and small arms ammunition; all mines, torpedoes, and depth charges; demolition charges; pyrotechnics; clusters and dispensers; cartridge and propellant actuated devices; electro-explosive devices; clandestine and improvised explosive devices; and all similar or related items or components explosive in nature.

Explosive Ordnance Production Hazard Level – Hazard severity categories are defined to provide a qualitative measure of the worst potential consequences resulting from personnel error, environmental conditions, design inadequacies, procedural deficiencies, system, subsystem or component failure or malfunction as follows:

a. Category I, Catastrophic – May cause death or system loss.

b. Category II, Critical – May cause severe injury, severe occupational illness, or major system damage.

c. Category III, Marginal – May cause minor injury, minor occupational illness, or minor system damage.

d. Category IV, Negligible – Will not result in injury, occupational illness, or system damage.

e. These hazard severity categories provide guidance to a wide variety of programs. However, adaptation to a particular program may be required. This adaptation may include definite transition points between categories and further definition of the degree of injury or damage.

Explosive Quantity – See *Explosive Limit*.

Explosive-Safety Distance – The prescribed minimum distance between the hazard class divisions and quantities (net weight) of explosives, and between such explosives and specified exposures (inhabited buildings, public highways, public railways, petroleum tanks, aircraft) affording an acceptable degree of protection and safety. See *Quantity-Distance (QD)*.

Explosive System – Includes its components and the operationally adjacent mechanisms. Examples of explosive systems are: small arms, chaff dispensers, projectiles, bombs, missiles, rockets, targets using explosive materials, mines, torpedoes, grenades, charges, rounds, CADs, PADs, explosively operated stud drivers, gun mounts, missile grenades, and sonobuoys.

Explosives – The term “explosive” or “explosives” includes any chemical compound or mechanical mixture which, when subjected to heat, impact, friction, detonation or other suitable initiation, undergoes a very rapid chemical change with the evolution of large volumes of high highly

heated gases which exert pressures in the surrounding medium. The term applies to high explosives, propellants and pyrotechnics that either detonate, deflagrate, burn vigorously, generate heat, light, smoke, or sound. Also see *High Explosive* and *Initiating Explosive*.

Explosives Anchorage – An area of water specifically designated for loading and unloading vessels and for anchoring vessels carrying a cargo of ammunition and explosives.

Explosives Area – Any area of a shore establishment in which explosives or ammunition are manufactured, stored, processed, or otherwise handled.

Explosives Facility – Any structure or location containing ammunition and explosives. See also *Operating Building*.

Explosives Hazardous Waste – Explosives, explosive components, or ordnance end items with a hazard classification of 1, regardless of the division, for which the holder of the explosives, explosive components, or ordnance end items has been notified by the cognizant official that the explosives, explosive components, or ordnance end items are to be discarded.

Explosives Safety – The summation of all actions conducted at DON activities, ashore, and afloat, designed to manage and control the risks and hazards inherent with ammunition and explosives operations. Explosives safety is the process used to prevent premature unintentional, or unauthorized initiation of explosives and devices containing explosives; and with minimizing the effects of explosions, combustion, toxicity, and any other deleterious effects. Explosives safety includes all mechanical, chemical, biological, electrical, and environmental hazards associated with explosives, hazards of electromagnetic radiation to ordnance, and combinations of the foregoing. Equipment, systems, or procedures and processes whose malfunction would hazard the safe manufacturing, handling, maintenance, storage, transfer, release, testing, delivery, firing, or disposal of explosives are also included.

Explosives Safety Quantity Distance (ESQD) Arcs – The prescribed minimum distance between sites storing or handling hazard Class 1 explosive material and specified exposures (i.e., inhabited buildings, public highways, public railways, other storage or handling facilities or ships, aircraft, etc.) to afford an acceptable degree of protection and safety to the specified exposure. The size of the ESQD arc is proportional to the NEW present.

Exposed Explosives – Explosives that are actually visible (such as unpackaged bulk explosives, disassembled or open components) and that also are susceptible to initiation directly by static or mechanical spark, or those that create (or accidentally create) explosives dust or give off vapors, fumes, or gases in explosive concentrations.

Exposed Site (ES) – A location exposed to the potentially hazardous effect (blast, fragments, debris, and heat flux) from an explosion at a Potential Explosion Site (PES). The distance to a PES and the level of protection required for an ES determine the quantity of ammunition/explosives permitted in a PES.

Failure – The event, or inoperable state, in which any item or part of an item does not, or would not, perform as previously specified.

Failure Cause – The physical or chemical processes, design effects, quality defects, part misapplication or other processes which are the basic reason for failure or which initiate the physical processes by which deterioration proceeds to failure.

Failure Mode Effects Criticality Analysis (FMECA) is a process that follows FMECA, and where each potential failure effect is classified according to its probability of occurrence and degree of severity. The Ordnance Assessment program for all ordnance programs shall be based upon a FMECA developed in the R&D phase of the program to identify potential failures and assess risk of those failures. The FMECA MIL-STD-1629A of 1983 is dated, but useful, and SAE ARP 5580 also provides a format and process for development of this document. The FMECA development effort shall use lessons-learned by experience with existing, similar ordnance systems. Membership in the FMECA development team shall be broad, including not only design agent representatives but experienced in-service engineers, maintenance professionals, system safety/risk assessment professionals, data professionals, and other technical experts experienced in failure analysis of existing systems. The FMECA developed by this team will then be used as a driver for development of the OA program, as well as safety-focused tools such as the Hazard Assessment Report.

Failure Reporting and Corrective Action System (FRACAS) – FRACAS is a disciplined closed loop failure reporting, analysis and corrective action system. The FRACAS process (system) is an essential element for the achievement of product reliability and safety, used to record all failures and problems related to a product or process and their associated root causes and failure analyses in order to assist in identifying and implementing corrective actions. Appendix G requires a FRACAS program be developed before the system enters service. After the program reaches the in-service phase, the in-service FMECA team stands up to collect failure data, perform analyses of failures, and develop and implement failure correction actions.

Federal Logistics Data (FEDLOG) – FEDLOG is an interactive query system using a variety of types of search data to significantly reduce the time required to access all information necessary to identify and order supplies.

Field Level Repairable (FLR) – A low cost repairable, capable of being restored to serviceable condition at the IMA, as indicated by the SM&R code. Final disposition of an FLR usually rests with the IMA.

Field Office – An office in which local administrative functions are performed for one area or line as contrasted with the main administrative buildings.

Field Service Representative – An employee of a manufacturer of military equipment or components who provides liaison or advisory service between the company and the Navy for their companies' equipment or components.

Fire Hazard – The hazard resulting from the tendency of certain materials to ignite spontaneously by chemical change, by spark, or by friction and contribute excessively to any fire in which they are involved.

Fire-Resistive – A term used to indicate the property of structures or materials to resist a fire to which they might be subjected without themselves becoming weakened to the point of failure.

Fire Retardant – A term used to designate generally combustible materials or structures which have been treated or have surface coverings designed to retard ignition or fire spread.

Fire Wall – A wall of fire-resistive construction designed to prevent the spread of fire from one side to the other. A fire wall may also be termed a "fire division wall."

Firebrand – A projected burning or hot fragment whose thermal energy is transferred to a receptor.

Fix Phase – The portion of a scheduled inspection that involves the correction of discrepancies found during the look phase.

Fixed Ammunition – Ammunition in which the cartridge case is permanently attached to the projectile.

Flame Resistant – A word applied to combustible materials, such as clothing, which have been treated or coated to decrease their burning characteristics.

Flame Retardant – A substance which is used to condition or treat combustible material so as to retard its ignition of fire spread.

Flameproof – Combustible materials, such as clothing which have been treated or coated to decrease their burning characteristics.

Flammable – Combustible. A flammable material is one which is easily ignited and burns readily.

Flammable Liquid – Any liquid having a flash point below 100 degrees Fahrenheit and a vapor pressure not exceeding 40 psi (absolute) at 100 degrees Fahrenheit and any liquid of lesser hazard when artificially heated or atomized so as to increase the ignition hazard.

Flammable Solid – A solid substance other than an explosive that under conditions incident to transportation, handling, or storage, is likely to cause fires through friction, absorption of moisture, spontaneous chemical changes, or as a result of heat retained from manufacturing or processing.

Flash Point – The mean temperature at which enough vapors of a liquid are given off to mix with air, ignite, and produce flames. Flash points are usually determined by the "closed-cup" method for liquids with flash points around normal temperatures; the "open-cup" method is used for liquids having relatively high flash points. Open-cup data are usually higher than closed-cup results.

Fleet Aviation Specialized Operational Training Group (FASOTRAGRU) – An activity that trains Fleet personnel under TYCOM direction in operational and tactical usage of weapon systems and in aviation maintenance management and administration.

Fleet Controlled Material – Material under the requisitioning, rationing, and issue control of the aviation TYCOMs, COMNAVAIRLANT/COMNAVAIRPAC, or their designated controlling agencies. A list of Fleet controlled material is published by the Aviation Material Offices, Norfolk, VA and San Diego, CA.

Fleet Marine Force (FMF) – A balanced force of combined arms comprising land, air, and service elements of the U.S. Marine Corps. A Fleet Marine Force is an integral part of a U.S. fleet and has the status of a type command.

Fleet Readiness Action Group (FRAG) – An organization unit within a NAVAVNDEPOT which provides assistance to the Fleet.

Fleet Replacement Enlisted Skills Training (FREST) – An enroute training program for specific weapon systems or equipment designated courses, provides training in familiarization, operation, and maintenance of the weapon system to be maintained in formal classrooms and practical application experience.

Fleet Support Team (FST) – The integrated program team assigned the responsibility to perform specified in-service engineering and logistics functions by the PMA.

Foreign Object Damage (FOD) – Rags, pieces of paper, line, articles of clothing, nuts, bolts, or tools that, when misplaced or caught by air currents normally found around aircraft operations (jet blast, rotor or prop wash, engine intake), cause damage to aircraft systems or weapons or injury to personnel.

Fracture – A complete break in the material surface.

Fragment Distance – The limiting range of a majority of fragments generated by an explosion of ammunition. Fragment distances are normally distances for Hazard Class 1, Division 2 items as prescribed in NAVSEA SW020-AC-SAF-010.

Fragment Hazard – The hazard resulting from the tendency of certain heavily encased explosive materials to explode progressively—a round, a box, or possibly one pile or stow of projectiles or fixed ammunition at a time—causing damage and destruction or propagation of explosion from one explosive site to another by the ejection into space of a considerable number of fragments. A hazardous fragment is one having an impact energy of 58 ft/lb or greater. An acceptable density of hazardous fragments is one or less per 600 square feet.

Fragmentation – The breaking up of the confining material of a chemical compound or mechanical mixture when an explosion takes place. Fragments may be complete items, subassemblies, pieces thereof, or pieces of equipment or buildings containing the items.

Friable – Term used to describe brittle or easily crumbled grains of powder.

Fuel Leaks – An indication of fuel leaking or residue (blue color) primarily on the propulsion module or lower fuselage area.

Functional Test – The testing of installed aircraft accessories, and equipment to determine proper functioning, particularly with respect to the applicable system.

Fund Code – The project tracking funding codes. A two-digit code identifying the operating budget and the appropriate expense element. Fund codes are used to charge the appropriate TYCOM's funds and to identify the nature of the expense.

Gas Mask – A full face mask and all component parts used for protection against various chemicals and high concentrations of chemical agents or in areas where there is an oxygen deficiency. This includes air supplied and oxygen generating masks. These are not protective masks.

General Public – Persons not associated with a DOD installation's mission or operations such as visitors, to include guests of personnel assigned to the installation, or persons not employed or contracted by DOD or the installation.

General Services Administration (GSA) – An integrated manager responsible for supporting all federal agencies for specific classes of material or specific items within classes assigned to other integrated managers.

Gouge – A major surface degradation involving the removal of metal from an unpainted surface or removal of paint.

Government Furnished Equipment (GFE) – Equipment that has been selected and is to be furnished by the government to a contractor or government activity for installation in, use with, or in support of the aeronautical system during production, conversion, or modification.

Ground-Fault Circuit Interrupter (GFCI) – A device that interrupts the electric circuit when a fault current to ground exceeds some predetermined value that is less than that required to operate the over-current protective device of the supply circuit. These devices differ from ground-fault detectors which merely signal the user that a faulty circuit exists and which do not automatically interrupt the circuit.

Guided Missile – An unmanned vehicle moving above the surface of the Earth whose trajectory or flight path is capable of being altered by an external or internal mechanism.

Hazard – A condition with the potential to cause injury, illness, or death of personnel; damage to or loss of equipment or property; or mission degradation.

Hazard Analysis – The logical, systematic examination of an item, process, condition, facility, or system to identify and analyze the probability, causes, and consequences of potential or real hazards.

Hazardous Fragment – A hazardous fragment is one having an impact energy of 58 ft/lb or greater.

Hazardous Fragment Density – A density of hazardous fragments exceeding one per 600 square feet.

Hazardous Locations (Electrical Equipment) – Locations where flammable gases of vapors are or may be present in the air in explosive or ignitable mixtures or where combustible dust or easily ignitable particles or fibers may be present.

Hazardous Material – The component of, or an item of ammunition which is inherently designed to produce the necessary energy required for ignition, propulsion, detonation, fire or smoke, thus enabling the item to function. Also, a material (corrosive, oxidizer, etc.) which inherently is dangerous and capable of serious damage and which, therefore, requires regulated handling to avoid creating accidents in connection with its existence and use.

Health Assessment (HA) – HA addresses all areas that affect the ability of a ordnance system program to adequately fulfill its mission. HA of ordnance systems combines Ordnance Assessment with logistics factors such as maintenance, life cycle cost, distribution of assets, maintenance pipeline, weapons platform compatibility and interoperability, obsolescence and training, and project the future useful life of the weapon system with metrics. A systems level approach shall be used to provide accurate end to end assessment of the ordnance/launcher and all associated equipment. HA begins with the Capability Development Document (CDD) and must be addressed during all phases of procurement and use. See Ordnance Assessment.

Health Hazard Assessment – An assessment that characterizes the possible health risks of occupational exposures of Service members during the course of their normal duties.

High Explosive – A substance which, in its application as a primary explosive, booster or main charge, in warheads and other applications, is generally required to detonate. This material may also be used as an energetic ingredient in propellants, pyrotechnics or other applications. RDX, HMX and TNT are examples of high explosives.

High Explosive Equivalent – See *Explosive Equivalent*.

Holding Yard – A location for groups of railcars, trucks or trailers used to hold ammunition, explosives and other hazardous materials for interim periods prior to storage or shipment.

Hot Refueling – An operational evolution where an aircraft is refueled while the engine(s) is (are) operating.

Hot Seating – An operational evolution where the pilot/crew of an aircraft is changed while the engine(s) is (are) operating and the aircraft is to be immediately re-launched.

Hybrid Propellants – A propellant charge using a combination of physically separated solid and liquid (or gelled) substances as fuel and oxidizer.

Hygroscopicity – The tendency of a material to absorb moisture from its surroundings.

Hypergolic – Term applied to the self-ignition of a fuel and an oxidizer upon mixing with each other without a spark or other external aid.

Hypergolic Fuel – Fuel which will spontaneously ignite with an oxidizer, such as aniline with fuming nitric acid. It is used as the propulsion agent in certain missile systems.

Igloo Magazine – See *Standard Igloo Magazine*.

Igniter – An assembly which, upon application of a mechanical or electrical stimulus, emits a flame capable of igniting a pyrotechnic or explosive material or device.

Ignition Temperature – The mean temperature at which a combustible material can be ignited and will continue to burn when the ignition source is removed. The ignition temperature for any one substance will vary with its particle size, confinement, moisture content and ambient temperature.

Illustrated Parts Breakdown (IPB) – A manual or section of a manual containing illustrations and part numbers for all parts of the aircraft or equipment on which it is issued. The IPB contains information required for ordering parts, including part numbers, and for identifying parts and arrangements of parts in assemblies.

Impulse Ammunition – Cartridges or charges consisting of specially prepared propellant charges contained in cartridge cases fitted with primers and assembled as blank cartridges for launching torpedoes, for propelling line throwing (carrying) projectiles, and for similar uses.

Incendiary – A chemical agent used primarily for igniting combustible substances with which it is in contact by generating sufficient heat to cause ignition.

Incident –

a. In information operations, an assessed event of attempted entry, unauthorized entry, or an information attack on an automated information system. It includes unauthorized probing and browsing; disruption or denial of service; altered or destroyed input, processing, storage, or output of information; or changes to information system hardware, firmware, or software characteristics with or without the users' knowledge, instruction, or intent.

b. An occurrence, caused by either human action or natural phenomena, that requires action to prevent or minimize loss of life or damage to property and/or natural resources. See also information operations.

c. Also see *Explosive Mishap*.

Individual Material List (IMRL) – A consolidated list shows items and quantities of certain SE required for material readiness of the aircraft ground activity to which the list applies. The lists are constructed by extracting those portions of SERMIS that pertain to the maintenance and material logistics responsibilities of the activity to which the list applies.

Individual Training Standards System (ITSS) – A Marine Corps performance based, standardized, documentable, level progressive, technical skills training management and evaluation program for enlisted Marines engaged in aviation maintenance.

Inert Ammunition – Ammunition and components that contain no explosive material. Inert ammunition and components include:

a. Ammunition and components with all explosive material removed and replaced with inert material.

b. Empty ammunition or components.

c. Ammunition or components that were manufactured with inert material in place of all explosive material.

Inert Filling – A prepared non-explosive filling of the same weight as the explosive filling.

Inert Material – Nonhazardous materials such as sand, plaster, binders with salts or metals, or cement that is used in ammunition items or components to simulate explosive material.

Inhabited Building(s) – A building or structure, other than an operating building, occupied in whole or part as a habitation for human beings, or a building or structure where people are accustomed to assemble, such as a church, schoolhouse, railroad station and similar transportation facilities, store, theater, or factory both within and outside an establishment.

Inhabited Building Distance – The minimum distance permitted between an inhabited building and an ammunition or explosives location for the protection of administration, quarters, industrial and other similar areas within a naval shore establishment. Inhabited building distances shall be provided between ammunition or explosives locations and the boundary of a shore establishment of the nearest point beyond the boundary where such inhabited structures could be erected.

Initial Outfitting – The process of issuing, assembling, and delivering allowances of aeronautical material and equipment to vessels in any one of the following categories:

a. New construction.

b. Conversion.

c. Activating from reserve Fleets.

Initial Training – Training performed to enable the training agency to acquire the capability for training. Normally, the initial cadre is composed of instructional personnel. The scope of initial training includes furnishing those training aids, for example, transparencies, charts, diagrams, and films, or devices evolved by the manufacturer in the production of new weapons systems, preparation of technical or instructional publications, and initial instructional training.

Initiating Explosive – A high explosive which is extremely sensitive to heat and shock and is normally used in small quantities to initiate the detonation or deflagration of a larger mass of less sensitive high explosive. Some authorities recognize the term "primary explosive" as being synonymous with "initiating explosive."

Insensitive High Explosives (IHE) – Explosive substances which, although mass detonating, are so insensitive that there is negligible probability of accidental initiation or transition from burning to detonation. TATB is an example.

Insensitive Munitions (IM) – Munitions which reliably fulfill (specified) performance, readiness and operational requirements on demand, but which minimize the probability of inadvertent initiation and severity of subsequent collateral damage to the weapon platform (including personnel) when subjected to unplanned stimuli.

In-Service Surveillance (ISS) – NATO terminology for a program assessing whether an ordnance item or weapon meets its requirements. The ISS program is described in DRAFT Allied Operating Procedure (AOP) under ACS326, and is derivative of the U.S. Navy Ordnance Assessment program.

In-service Training (IST) – Training conducted within the parent command to achieve and sustain the knowledge and skills required for qualification and certification to operate and/or maintain weapons or support equipment.

Inspect – To compare the characteristics of an item with established standards.

Inspection –

a. A critical examination conducted by qualified personnel, using established techniques, to obtain an objective evaluation of the adequacy of personnel, equipment or procedures.

b. The examination and testing of supplies and services, including raw materials, components, and intermediate assemblies, to determine whether they conform to specified requirements.

Inspection Station – A designated location at which trucks and railcars containing ammunition and explosives are inspected.

Installation Related Personnel – Military personnel (to include family members), DOD employees, DOD contractor personnel, and other personnel having either a direct operational (military or other Federal personnel undergoing training at an installation) or logistical support (for example, vendors) relationship with installation activities.

Integrated Logistics Support (ILS) – A composite of all the support considerations necessary to assure the effective and economical support of a system for its life cycle. It is an integral part of all other aspects of system acquisition and operation.

Integrated Logistics Support (ILS) Manager – The individual responsible for:

a. Defining and executing an integrated support program for a weapon system or equipment acquisition.

b. Interpreting the operational concept of weapon systems and equipment for the purpose of establishing ILS concepts, requirements, parameters, and constraints for inclusion in appropriate basic planning documents, requests for proposal, contracts, and ILSPs.

c. Accomplishing logistic support actions directly or assigning responsibilities for accomplishment to individual element managers within or external to the organization.

Integrated Logistics Support Plan/Program (ILSP) – The total comprehensive plan, prepared by the contractor, for management and execution of the ILSP requirements. The ILSP is the consolidation of all individual logistics support element plans into an interrelated, interfaced, and phased program to provide effective and timely logistics support for a designated aeronautical system/subsystem/component.

Interchange Yard – An area set aside for the exchange of railcars or vehicles between the carrier and establishment.

Interchangeable Items – Two or more items that have such functional and physical characteristics as to be equivalent in performance and durability, and are capable of being interchanged without alteration of the items themselves or of adjoining items except for adjustment.

Interim Change – A change issued via Naval message to correct procedure, policy, or situation adversely affecting maintenance, aircraft and personnel safety readiness or a critical function.

Intermagazine Separation – See *Magazine Distance*.

Intermediate Maintenance Activity (IMA) – An activity (ship or station) authorized to provide Intermediate level maintenance support. It consists of the Aircraft Maintenance, FRCs, NMC Detachments, Weapons Departments/Divisions, MALS, and SIMA.

Interservice Support and Services – Action by one military service or element to provide logistic/administrative support to another military service or element thereof. Such action can be recurring or nonrecurring in character, on an installation, area, or worldwide basis.

Intraline Distance – The distance to be maintained between any two operating buildings and sites within an operating line, at least one of which contains or is designed to contain explosives, except that the distance from a service magazine for the line to the nearest operating building shall be not less than the intra-line distance required for the quantity of explosives contained in the service magazine.

Inventory Control – That phase of military logistics which includes managing, cataloging, requirements determinations, procurement, distribution, overhaul, and disposal of materiel. Also called inventory management; materiel control; materiel management; supply management.

Inventory Control Point (ICP) – An organizational unit or activity within a Department of Defense supply system that is assigned the primary responsibility for the materiel management of a group of items either for a particular Service or for the Defense Department as a whole. Materiel inventory management includes cataloging direction, requirements computation, procurement direction, distribution management, disposal direction and, generally, rebuild direction.

Inventory Manager – An Organizational Unit or Activity which is assigned the primary responsibility for the supply management of a group of items including responsibility for computing repair documents.

Investigation – Inquiry into a condition or situation systematically for the purpose of developing and providing factual information to cognizant authorities.

Investigator – A professional scientist or engineer in charge of specific RDT&E projects.

Item – Any level of hardware assembly, for example, segment of a system, subsystem, equipment, or component part.

Item Unique Identification (IUID) – The DOD program that enables easy access to information about DOD possessions to allow the acquisition, repair, and deployment processes for items to be more efficient. IUID permanently identifies an individual item and is a mandatory requirement for all DOD solicitations issued on or after January 1, 2004 (DFARS 252.211) applies. See also "DOD Guide to Uniquely Identifying Items" and "Concept of Operations for IUID-Enabled Maintenance in Support of DOD Material Readiness".

Joint Servicing – That function performed by a jointly staffed and financed activity in support of two or more Military Services.

Joint Storage – DOD/non-DOD explosives storage under DOD control.

Julian Date – The year and numerical day of the year identified by four numeric characters. The first character indicates the year and the remaining three characters specify the day of the year, for example, 5210 indicates the 210th day of 1995 or 28 July 1995.

K-Factor – The factor in the formulas D=KW (English units) or D=KQ (metric units) which is used in quantity-distance determinations. The K-factor is a constant and represents the degree of damage that is acceptable. Typical constants used in English units are 1.25, 4.5, 9, 11, 18, 24, 30, 40 and 50; the lower figures indicating the acceptance of a greater amount of damage. The value of K in English units is approximately 2.5 times its value in metric units.

Landing Force Operational Reserve Material – The material including rations, ammunition, fuel, clothing, weapons, etc., necessary to support a Marine amphibious unit for approximately 30 days.

Lead – A lead is an explosive train component which consists of a column of high explosive, usually small in diameter, that is used to transmit detonation from one detonating component to succeeding high-explosive component. The high explosive charge is usually loaded into a metal cup or can (typically about 0.190 inch diameter by 0.3 inch long). It is generally used to transmit the detonation from a detonator to a booster charge.

Level of Supply – The quantity of supplies or materials authorized or directed to be held in anticipation of future demands.

Life Cycles – The total phases through which an item passes from the time it is initially developed until the time it is either consumed in use or disposed of as being excess to all known materiel requirements.

Line Management – For the purposes of this document, line management is defined as those persons to whom the Commander of an RDT&E activity has delegated supervisory responsibility.

Liquid Penetrant – Methods used for the detection of surface cracks or discontinuities. The inspection surfaces are sprayed with or immersed in liquid, the excess liquid is removed, and the defect is indicated visually by color or fluorescence.

Loading Docks – Facilities, structures or paved areas designed and installed for transferring ammunition and explosives between any two modes of transportation.

Local Purchase – The function of acquiring a decentralized item of supply from sources outside the Department of Defense.

Logistic Movement – The transfer of ammunition to or from a ship at an authorized handling location.

Logistics – Planning and executing the movement and support of forces. It includes those aspects of military operations that deal with: design and development, acquisition, storage, movement, distribution, maintenance, evacuation, and disposition of materiel; movement, evacuation, and hospitalization of personnel; acquisition or construction, maintenance, operation, and disposition of facilities; and acquisition or furnishing of services.

Logistics Support – Support that encompasses the logistic services, materiel, and transportation required to support the continental United States-based and worldwide deployed forces.

Logistics Support Equipment – Equipment used for the packaging, bulk handling, storage/stowage, and transportation of weapons and weapon components. Some of these items are categorized as materials handling equipment and ordnance handling equipment.

Look – In mine warfare, a period during which a mine circuit is receptive of an influence.

Look Phase – The portion of an inspection that includes the basic requirements outlined by the PMICs, excluding repair of discrepancies, that cannot be completed within the time allotted on MRCs.

Lower Explosive Limit – The lowest concentration by percent of volume of a gas or vapor in the atmosphere at normal temperatures and pressures at which the gas or vapor will ignite and sustain combustion.

Magazine – Any building or structure, except an operating building, used for the storage of ammunition and explosives.

Magazine Area – The area on shore surrounding a magazine or group of magazines. The term is used to denote the areas adjoining or surrounding explosive storages where freedom of action is restricted in the interests of safety.

Magazine Designator – A three-part symbol of letters and numbers which identify the magazine group or area in which the magazine is located, the type and capacity of the magazine, and the sequence number within the magazine group or area assigned to the magazine.

Magazine Distance – The minimum distance permitted between any two magazines depending on the type of magazine and the Class/Division and quantity of explosives and ammunition involved; the type and quantity of explosives requiring the greater distance will govern the magazine separation. Also called Inter-magazine Separation.

Magazine Placards – Safety placards that are required to be posted inside a magazine on or near each door.

Main Charge Explosive – An explosive material that is less sensitive than a booster explosive and generally used as the final charge in any explosive application. Because of its relative insensitivity, this type of explosive ordinarily requires initiation by a booster explosive. Composition A-3, TNT, and PBXN-106 are examples of a main charge explosive.

Maintainability – The ability to maintain an item in, or restore to, a specific operational condition by expending resources, including man-hours, at an acceptable rate when using prescribed procedures and resources.

Maintenance –

a. All action taken to retain material in a serviceable condition or to restore it to serviceability. It includes inspection, testing, servicing, classification as to serviceability, repair, rebuilding, and reclamation.

b. All supply and repair action taken to keep a force in condition to carry out its mission.

c. The routine recurring work required to keep a facility (plant, building, structure, ground facility, utility system, or other real property) in such condition that it may be continuously used at its original or designed capacity and efficiency for its intended purpose.

Maintenance Action – Any one of a number of types of specific maintenance operations necessary to retain an item in or restore it to a specified condition.

Maintenance Action Form (MAF) – A multi-purpose document used in the MDS and the VIDS.

Maintenance Activity – Any Organization (Activity or Unit) of the Naval establishment assigned the mission, task, or functional responsibility of performing aircraft upkeep or rework. Use of the term refers to organizations and personnel occupying aircraft maintenance facilities and using aircraft maintenance material, but does not include reference to the facilities or material themselves. Aircraft maintenance activities are classified as to levels of maintenance performed. The highest level a particular activity is responsible for performing is established as the activity's classification. This classification does not necessarily mean the activity involved is responsible for all lower levels of maintenance.

Maintenance Capability – Availability of those resources, namely facilities, tools, test equipment, drawings, technical publications, training, maintenance personnel, engineering support, and spare parts, which are required to carry out maintenance.

Maintenance Capacity – A quantitative measure of maintenance capability usually expressed as the amount of direct labor man-hours that can be applied within a specific industrial shop, or other entity, during a 40-hour week (one shift).

Maintenance Concept – The planned or envisioned methods that will be employed to sustain the aeronautical system/equipment at a defined level of readiness or in a specified condition in support of the operational requirement. This includes significant aeronautical system/equipment characteristics, for example, built-in test, compatibility with existing or planned testing and SE, and a generalization of logistics support element requirements (manpower, equipment, facilities, and workload distribution throughout the defined maintenance level). The maintenance concept is initially stated by the government for design and support planning purposes and provides the basis or point of departure for development of the plan to maintain. The maintenance concept may be influenced or modified by economic, technical, or logistics considerations as the design development of the aeronautical system/equipment proceeds.

Maintenance Department – The part of an activity responsible for the aircraft maintenance functions, also considered a maintenance activity. In the shore establishment, stations responsible for Intermediate level maintenance will have maintenance departments.

Maintenance Division/Branch – The part of an activity responsible for the activity's aircraft maintenance functions; or the part of an Aircraft Maintenance Department responsible for a specific part of the department's functions, for example, repair of power plants. In the shore establishment, stations responsible for only Intermediate level and Organizational level maintenance will have maintenance divisions of operations or air departments.

Maintenance Facility – Any building, property, or space designed for, available to, or used by Aircraft Maintenance Activities. Use of the term refers to shops, hangars, or parking areas, both afloat and ashore, used primarily for aircraft upkeep or rework purposes. Use of the term does not refer to the organization's personnel, responsibilities, or material (except installed aircraft SE). Aircraft maintenance facilities are classified by the levels of maintenance they are designed for or used to support. The highest level is established as the facility's classification. This classification does not necessarily indicate the facility involved includes facilities for all the lower levels of maintenance.

Maintenance Instruction Manual (MIM) – Contains instructions for Organizational level, Intermediate level, and Depot level maintenance and servicing of a specific weapon system and related airborne equipment including SE.

Maintenance Levels – Maintenance tasks divided into the number of levels required so common standards can be applied to the many and varied aircraft maintenance activities of the military establishment. They are increments of which all maintenance activities are composed. Joint Pub 1-02 defines the three levels as Organizational, Intermediate, and Depot.

a. Organizational Level (O-Level) Maintenance – Maintenance which is the responsibility of, and performed by, a using organization on its assigned equipment. Its phases normally consist of inspecting, servicing, lubricating, adjusting, and replacing parts, minor assemblies, and subassemblies.

b. Intermediate Level (I-Level) Maintenance – Maintenance which is the responsibility of, and performed by, designated maintenance activities for direct support of using organizations.

Its phases normally consist of calibration, repair or replacement of damaged or unserviceable parts, components, or assemblies; the emergency manufacture of non-available parts; and the provision of technical assistance to using organizations.

c. Depot Level (D-Level) Maintenance – Maintenance done on material requiring major rework or a complete rebuild of parts, assemblies, subassemblies, and end items, including manufacture, modification, testing, and reclamation of parts as required. D-level maintenance serves to support lower levels of maintenance by providing technical assistance and performing maintenance beyond the responsibility of O-level and I-level maintenance. D-level maintenance provides stocks of serviceable equipment by using more extensive facilities for repair than are available in lower level maintenance activities.

Maintenance Movement – Any movement of ammunition from its normal shipboard location to another location in order to conduct required assembly, disassembly, maintenance, or test of a weapons system, or maintenance of a stowage area. A maintenance movement may include strike up/strike-down, movement within the normal stowage area, or movement from one stowage area to another.

Maintenance Plan – A document containing technical data, tailored to a specific weapon system maintenance concept, which identifies maintenance and support resource requirements to maintain aeronautical systems, equipment, and SE in an operationally ready state. The maintenance plan provides the interface between maintenance engineering and supply for provisioning purposes and communicates inputs to enable other logistic element managers to develop their hardware support requirements. The maintenance plan is designed as a tool for the shore community for integrated logistic support planning and is prepared per NAVAIRINST 4790.22.

Maintenance Procedures – Established methods for periodic checking and servicing of items to prevent failure or to affect a repair.

Maintenance Processes – Maintenance can be performed using a wide variety of approaches. Two main categories of maintenance—reactive and proactive—are provided to describe the range of options available.

Maintenance Requirements Cards (MRCs) – Card sets issued by COMNAVAIRSYSCOM containing scheduled maintenance requirements applicable to I-level and O-level activities for the specific aircraft/SE for which they are issued.

Maintenance Resources – Personnel, materials, tools, equipment, facilities, technical data, and dollars provided to carry out the equipment maintenance mission.

Maintenance Schedule – A plan of procedures for carrying out specific jobs or projects in a maintenance activity's maintenance program; fixing the time when operations are to begin or be completed.

Maintenance Status – The classification or condition of equipment undergoing preventive/restorative action.

Maintenance Training Requirements Review (MTRR) – A CNO sponsored review of designated weapon system training courses which identifies training track, course, NEC or MOS, and curriculum deficiencies. The MTRR initiates corrective action and establishes tailored training tracks for enlisted aviation billets.

Maintenance Training Unit (MTU) – An enroute training program for specific weapon systems or equipment designated courses that provides training in familiarization, operation, and maintenance of the weapon system to be maintained in formal classrooms and practical application experience.

Malfunction – See *Explosive Mishap*.

Man-Hours – The total number of accumulated direct labor hours (in hours and tenths) expended in performing a maintenance action. Direct maintenance man-hours are man-hours expended by assigned personnel to complete the work described on the source document. This includes the functions of preparation, inspection, disassembly, adjustment, fault correction, replacement or reassembly of parts, and calibration/tests required in restoring the item to a serviceable status. It also includes such associated tasks as checking out and returning tools, looking up part numbers in the IPB, transmitting required information to material control, and completing documentation of the MAF.

Manufacturer – Individual, company, firm, corporation, or government activity engaged in the fabrication of finished or semi-finished products.

Marine Aviation Logistics Squadron (MALS) – The unit or activity within a Marine Aircraft Group (MAG) assigned the mission of providing I-level support to the squadrons of the MAG.

Marine Aviation Logistics Support Program (MALSP) – Provides the framework within which a variety of concepts, programs and allowances are developed to support each T/M/S aircraft that could be used to form the aviation combat element of a MAGTF. The focus of the MALSP is to identify and integrate the personnel, SE, mobile facilities or shelters, and repair or spare parts required to sustain a MAGTF aviation combat element.

Mass-Detonating Explosives – High explosives, black powder, certain propellants, certain pyrotechnics, and other similar explosives, alone or in combination, or loaded into various types of ammunition or containers, most of the entire quantity of which can be expected to explode virtually instantaneously when a small portion is subjected to fire, to severe concussion or impact, to the impulse of an initiating agent, or to the effect of a considerable discharge of energy from without. Such an explosion normally will cause severe structural damage to adjacent objects. Explosion propagation may occur immediately to other items of ammunition and explosives stored sufficiently close to, and not adequately protected from, the initially exploding pile with a time interval short enough so that two or more quantities must be considered as one for quantity-distance purposes.

Master Repairable Item List (MRIL) – A listing, in NIIN sequence, of all repairable assemblies, indicating the DRP (Navy or commercial) and provides shipping instructions for these assemblies when they become defective. This list is published as NAVSUP Publication 4107.

Material – All items (including ships, tanks, self-propelled weapons, aircraft, etc., and related spares, repair parts, and support equipment, but excluding real property, installations, and utilities) necessary to equip, operate, maintain, and support military activities without distinction as to its application for administrative or combat purposes.

Material Handling Equipment (MHE) – Commercially available industrial equipment, such as forklifts, warehouse tractors, pallet trucks, and platform trucks. Some of these items are

approved for use in ammunition and explosive ordnance handling operations, and are a category of logistic SE.

Maximum Credible Event (MCE) – In hazards evaluation, the maximum credible event from a hypothesized accidental explosion, fire, or agent release is the worst single event that is likely to occur from a given quantity and disposition of ammunition and explosives. The event must be realistic with a reasonable probability of occurrence considering the explosive propagation, burning rate characteristics, and physical protection given to the items involved. The MCE evaluated on this basis may then be used as a basis for effects calculations and casualty predictions.

May/need – Used only when an application of a procedure is optional.

Military Munitions – All ammunition products and components produced or used by or for the U.S. Department of Defense or the U.S. Armed Services for national defense and security, including military munitions under the control of the Department of Defense, the U.S. Coast Guard, the U.S. Department of Energy, and National Guard personnel. The term military munitions includes: confined gaseous, liquid, and solid propellants, explosives, pyrotechnics, chemical and riot control agents, smokes, and incendiaries used by DOD components, including bulk explosives and chemical warfare agents, chemical munitions, rockets, guided and ballistic missiles, bombs, warheads, mortar rounds, artillery ammunition, small arms ammunition, grenades, mines, torpedoes, depth charges, cluster munitions and dispensers, demolition charges, and devices and components thereof. Military munitions do not include wholly inert items, improvised explosive devices, and nuclear weapons, nuclear devices, and nuclear components thereof. However, the term does include non-nuclear components of nuclear devices, managed under DOE's nuclear weapons program, after all required sanitizing operations under the Atomic Energy Act of 1954, as amended, have been completed. See 40 CFR 260.10.

Military Standard Transportation and Movement Procedures (MILSTRAP) – Uniform and standard transportation data, documentation, and control procedures applicable to all cargo movements in the Department of Defense transportation system.

Misfire –

a. Failure to fire or explode properly.

b. Failure of a primer or the propelling charge of a round or projectile to function wholly or in part.

Missile Airframe – The assembled, principal structural components less propulsion system, control system, electronic equipment, and payload.

Missile Targets – All recoverable and non-recoverable, remotely controlled or programmed, unmanned aerial target vehicles; also remotely controlled or programmed powered land target and target boats, but excludes drones.

Mission –

a. The task, together with the purpose, that clearly indicates the action to be taken and the reason therefore.

b. In common usage, especially when applied to lower military units, a duty assigned to an individual or unit; a task.

c. The dispatching of one or more aircraft to accomplish one particular task.

Mission Essential – Anything authorized and assigned to the approved combat and combat support forces which would be immediately employed to wage war and provide support for combat actions.

Mobile Facility (MF) – A re-locatable tactical shelter and its related equipment. The principle application in Naval aviation of an MF is to provide re-locatable housing for aviation weapon systems and SE maintenance and related functions. They may be used onboard ship as well as ashore.

Mound – An elevation of earth having a crest of at least 3 feet wide, with the earth at the natural slope on each side and with such elevation that any straight line drawn from the top of the side wall of a magazine or operating building or the top of a stack containing explosives to any part of a magazine, operating building, or stack to be protected will pass through the mound. The toe of the mound shall be located as near the magazine, operating building, or stack as practicable. Earth used for artificial construction should contain no more than 15 percent of stones or gravel, all of which should pass through a 1-inch screen.

Munition – A complete device charged with explosives, propellants, pyrotechnics, initiating composition, or nuclear, biological, or chemical material for use in military operations, including demolitions. Certain suitably modified munitions can be used for training, ceremonial, or nonoperational purposes. Also called ammunition. (Note: In common usage, "munitions" [plural] can be military weapons, ammunition, and equipment.)

National Item Identification Number (NIIN) – A two-digit National Codification Bureau code combined with seven other digits. See *National Stock Number (NSN)*.

National Stock Number (NSN) – The 13-digit stock number replacing the 11-digit Federal Stock Number. It consists of the 4-digit Federal Supply Classification code and the 9-digit National Item Identification Number. The National Item Identification Number consists of a 2-digit National Codification Bureau number designating the central cataloging office (whether North Atlantic Treaty Organization or other friendly country) that assigned the number and a 7-digit (xxx-xxxx) nonsignificant number. The number shall be arranged as follows: 9999-00-999-9999.

Naval Air Training and Operating Procedures Standardization (NATOPS) Manual – Series of general and specific aircraft procedural manuals that govern the operations of naval aircraft.

Naval Aviation Logistics Command Management Information System (NALCOMIS) – A modern, real time, on-line responsive computer based automated MIS, allows Navy and Marine Corps aviation maintenance unit personnel to record flight and maintenance actions.

Naval Aviation Logistics Data Analysis (NALDA) – An automated database and information retrieval system for aviation logistics management and technical decision support. Analysis capability is provided through interactive query and batch processing from remote terminals. NALDA assists users in making improved decisions affecting fleet aircraft readiness. Users can

define, identify, and isolate logistics problem areas from a centralized data bank of integrated aviation logistics information.

Naval Establishment – Comprised of the Navy Department, Shore Establishment, and the Operating Forces of the Navy and the Operating Forces of the Marine Corps. Synonymous with DON.

Navigable Streams – Those parts of streams, channels or canals capable of being used in their ordinary or maintained condition as highways of commerce over which trade and travel are or may be conducted in the customary modes, not including streams which are not capable of navigation by barges, tugboats, and other large vessels, unless they are extensively and regularly used for the operation of pleasure boats.

Navy Department – Refers to the central executive offices of the DON located at the seat of government. The Navy Department is organizationally comprised of the Office of the Secretary of the Navy, which includes Civilian Executive Assistants, Office of Staff Assistants, and the headquarters organizations of the Office of Naval Research, the Office of the Judge Advocate General, and the ASN(FM/C) of the Navy; the Office of the CNO, the Headquarters, Marine Corps; and, under the command of the CNO, the headquarters organizations of the Chief of Naval Personnel and the Chief, Bureau of Medicine and Surgery. In addition, the Headquarters, Coast Guard, is included when the United States Coast Guard is operating as a service in the Navy.

Navy Directives System – Consists of instructions and notices employing the standard subject identification code numbering system for identification and filing purposes. The system is used throughout the Navy for issuing directives on policy, organization, administrative methods, or procedures.

Navy Integrated Training Resources and Administration System (NITRAS) – An automated system responsive to training information requirements from higher commands, provides automated capability to manage and support the training effort throughout the Navy.

Navy Stock Fund – A revolving or working capital fund which acquires, holds, and issues inventories. When an item is issued, the customer is charged for the material and the stock fund is reimbursed.

Navy Training Support Plan (NTSP) – The official statement of billets, personnel, and training input and resource requirements to support introduction and operational use of aircraft, systems, subsystems, equipments, and other developments. The NTP assigns responsibilities for planning, programming, and implementing actions necessary to provide the required support.

Net Explosive Weight (NEW, in pounds) – The actual weight in pounds of explosive mixtures or compounds, including the trinitrotoluene equivalent of energetic material, that is used in determination of explosive limits and explosive quantity data arcs.

Nitrogen Padding (or Blanket) – The filling of the void or ullage of a closed container with nitrogen gas to prevent oxidation of the chemical contained therein and to avoid formation of a flammable mixture; also may be used to mean the maintenance of a nitrogen atmosphere in or around an operation, piece of equipment, and the like.

Non-Aviation Ship – For NOMP purposes, ships not designated as Aviation Ships, such as CG, FFG, AFS, DD. Non-aviation ships may be air or aviation capable.

Non-Destructive Inspection (NDI) – Methods that may be applied to a structure or component to determine its integrity, composition, physical, electrical, thermal properties, or dimensions without causing a change in any of these characteristics.

Non-DOD Component – Any entity (Government, private, or corporate) which is not a part of the Department of Defense.

Non-DOD Operations/Storage – Explosives operations/storage conducted on DOD property in accordance with only this table, BATF, FAA or other federal, state, and local explosives safety requirements. Under these type operations, DOD will be responsible only for ensuring IM standards are met as outlined in explosives site plan submissions. This does not constitute "DOD oversight" as intended in the above definition of "DOD Operations/Storage."

Non-Operating Reliability/Dormant/One-Shot Devices – The nature of ordnance is that they lie unused for extended periods of time before they are used once, after which they are expended. Items of this type are often referred to as "Dormant" and "One-Shot" devices and pose a challenge for reliability assessment. For such systems, a Non-Operating Reliability assessment approach is often selected as the appropriate reliability model.

Non-Service Ammunition – Ammunition used for training personnel in all aspects of a familiarization program is classified as non-service ammunition. This ammunition may be of service quality or may be specifically modified or loaded practice ammunition, inert training, inert dummy/drill, or exercise/recoverable ammunition.

Note – An operating condition, procedure, practice, etc., which requires emphasis.

On the Job Training (OJT) – Training in the performance of a task or duty while engaged in its performance.

Operating Building – Any structure, except a magazine, in which operations pertaining to manufacturing, processing, handling, loading, or assembling of explosives and ammunition are performed.

Operating Line – A group of buildings, facilities, or related work stations so arranged as to permit performance of the consecutive steps in the manufacture of an explosive; or in the loading, assembly, modification and maintenance of ammunition.

Operating Unit – Squadrons and units with an operating allowance. Squadrons and units may be further subdivided into detachments. To be an operating unit, a unit must have a mission that requires flight operations (other than ferry or flight test) by Navy aircraft.

Operational Characteristics – Those military characteristics that pertain primarily to the functions to be performed by equipment, either alone or in conjunction with other equipment; e.g., for electronic equipment, operational characteristics include such items as frequency coverage, channeling, type of modulation, and character of emission.

Operational Evaluation – The test and analysis of a specific end item or system, insofar as practicable under Service operating conditions, in order to determine if quantity production is

warranted considering: a. the increase in military effectiveness to be gained; and b. its effectiveness as compared with currently available items or systems, consideration being given to: (1) personnel capabilities to maintain and operate the equipment; (2) size, weight, and location considerations; and (3) enemy capabilities in the field.

Operational Inspection – An observed demonstration of the capability of an inspected unit or activity to perform the mission and task for which it is organized or designed. The objectives of operational inspections are to obtain:

a. A realistic evaluation of the operational and material readiness of combat units to perform assigned missions.

b. An evaluation of the adequacy with which shore based commands or units execute assigned missions in support of the readiness of combat forces.

Operational Necessity – A mission associated with war or peacetime operations in which the consequences of an action justify the risk of loss of aircraft and crew.

Operational Risk Management (ORM) – A systematic, decision making process used to identify and manage hazards that endanger Naval resources.

Operational Shield – A barrier constructed at a particular location or around a particular machine or operating station to protect personnel, material, or equipment from the effects of a possible localized fire or explosion. Operational shields when properly designed in accordance with MILSTD-398, "Shields, Operational for Ammunition Operations, Criteria for Design of and Tests for Acceptance", should protect personnel and assets from thermal, pressure and fragmentation hazards resulting from an accidental or intentional detonation and deflagration of ammunition or explosives.

Operational Training – Training that develops, maintains, or improves the operational readiness of individuals or units.

Ordnance – Explosives, chemicals, pyrotechnics, and similar stores, e.g., bombs, guns and ammunition, flares, smoke, or napalm.

Ordnance Assessment (OA) – OA is comprised of all activities that are necessary to monitor and assess the safety, reliability, and performance of explosive ordnance and components and project the future of these with metrics. These activities include non-destructive testing, destructive test, environmental monitoring and analysis of data from operational and training use, maintenance, and operator reported problems.

Ordnance Assessment Program (OAP) – A program which evaluates threat weapons and level of effort ordnance, collectively referred to as ordnance, in the in-service inventory to quantify current levels of safety, reliability and performance characteristics for ordnance and to identify changes in those characteristics.

Ordnance Handling Equipment (OHE) – Specially designed mechanical equipment used for assembling, disassembling, handling, transporting, lifting, positioning, rotating, or containing conventional weapons, ammunition, explosives, and related components.

Ordnance Handling Vehicle – Those vehicles which have been approved for over-the-road transport and handling of ammunition and explosive ordnance. Examples of such equipment

include trucks, trailers, transporters, and bomb service trucks. The vehicles are a category of logistics SE.

Organizational (ORG) Code – A structured three-character alphanumeric code that identifies activities within a major command.

Organizational Level Maintenance – See *Maintenance Levels.*

Organizational Level Maintenance – That maintenance that is the responsibility of and performed by a using organization on its assigned equipment. Its phases normally consist of inspecting, servicing, lubricating, and adjusting, as well as the replacing of parts, minor assemblies, and subassemblies.

Outdoor Storage Sites – Locations designated for the storage of ammunition in the open.

Overhaul – The restoration of an item to a completely serviceable condition as prescribed by maintenance serviceability standards.

Overhaul of Ammunition – The act of determining the serviceability of the primary components of an item, and the performance of exterior maintenance as required to render the item fully serviceable.

Oxidizer – A substance that yields oxygen or oxygenizing species that readily support the combustion of organic matter, metals, flammable metals, or reducing agents.

Packaging – An all-inclusive term covering cleaning, preserving, packaging, packing, and marking required to protect items during every phase of shipment, handling, and storage.

Pallet –

a. A flat base for combining stores or carrying a single item to form a unit load for handling, transportation, and storage by materials handling equipment.

b. (DOD only) 463L pallet – an 88 x 108 inch aluminum flat base used to facilitate the upload and download of aircraft.

Partial Detonation – Instances when only part of the total explosive load in ammunition detonates. Strong air shock and small as well as large case fragments are produced. Small fragments are similar to those in normal complete detonation. Extensive blast and fragmentation damage results to the surrounding area. Amount of damage and extent of breakup of cases into small fragments increases with increasing amount of explosive that detonates. Severity of blast could cause large ground crater, if ammunition is large bomb; hole size depends on amount of explosive that detonates.

Participating Service – The military service that uses a multipurpose aeronautical system and obtains support for it from the executive service.

Parts Kit – Supporting items and material for the maintenance, repair, and rework of selected aeronautical repairable end items procured, stocked, requisitioned, accounted for, and used on a kit basis as one line item. Parts kits should not be confused with the kits issued to perform a one-time modification of an item or with interim fleet maintenance support kits.

Passenger Railway – Any steam, diesel, electric, or other railway which carries passengers for hire.

Passenger Railway Distance – The minimum distance permitted between a passenger railway and a site where ammunition and explosives are located. Also referred to as Public Railway Distance. Refer to definition of Public Traffic Route.

PB (IPB) Projectile (PB-Lead) – An object projected by applied exterior force and continuing in motion by virtue of its own inertia, such as a bullet, rocket, shell or grenade.

Peculiar Support Equipment (PSE) – An item of SE that must be designed and developed in conjunction with the development of a specific weapons system and does not meet the criteria of CSE. PSE is divided as Avionics SE (common and peculiar) and Non-avionics SE (common and peculiar).

Performance-Based Logistics (PBL) – The purchase of support as an integrated, affordable, performance package designed to optimize system readiness and meet performance goals for a weapon system through long-term support arrangements with clear lines of authority and responsibility. Program Managers (PMs) are to develop and implement PBL strategies that optimize total system availability while minimizing cost and logistics footprint. PBL should include the best use of public and private sector capabilities through government and industry partnering initiatives (DOD Directive 5000.1). PBL is explained in detail in both "Performance Based Logistics: A PM's Support Guide," and "Designing and Assessing Supportability in DOD Weapon Systems: A Guide to Increased Reliability and Reduced Logistics Footprint".

Periodic Maintenance Information Card (PMIC) – The PMS publication that contains the component/assembly removal/replacement schedule, airframe structural life limits, and a maintenance requirements systems index. It also contains a conditional inspection listing and a phase change implementation card (included as required).

Permanent Unit Code (PUC) – The 6-character number permanently assigned to each reporting custodian of aircraft. The master code list is maintained by the CNO. PUCs may be obtained by the cognizant ACC for assignment to newly formed units by correspondence, message, or DSN telephone call.

Permissible Working Load – See *Safe Working Load*.

Permissive Action Link – A device included in or attached to a nuclear weapon system to preclude arming and/or launching until the insertion of a prescribed discrete code or combination. It may include equipment and cabling external to the weapon or weapon system to activate components within the weapon or weapon system.

Personal Qualification Standards (PQS) –

a. Written compilation of knowledge and skills, derived from a task analysis, required to maintain a specific type of equipment or system.

b. Documents which describe the knowledge and skills trainees must have to correctly perform their duties. The policy and procedures for PQS are outlined in OPNAVINST 3500.34F.

Personal Requirements – Those requirements for personnel derived from a maintenance task that must be performed.

Physical Custody – Actual possession of the ordnance or WSE for a definite purpose. This does not necessarily imply reporting custody.

Pier – A landing place or platform built into the water, perpendicular or oblique to the shore, for the berthing of vessels.

Pipeline – In logistics, the channel of support or a specific portion thereof by means of which materiel or personnel flow from sources of procurement to their point of use.

Plan of Action and Milestones – A document that identifies actions or tasks in the specific order needed to accomplish an objective. This document assigns to each action, the office responsible, and the start and completion date for each action.

Planned Maintenance – The systematic care and inspection of material by the user for the purpose of retaining it in serviceable condition and detecting and correcting minor failures before they develop into major defects or malfunctions.

Planned Maintenance Requirement – The number of assemblies to be replaced per given maintenance cycle.

Pool –

a. Maintenance and control of a supply of resources or personnel upon which other activities may draw. The primary purpose of a pool is to promote maximum efficiency of use of the pooled resources or personnel, e.g., a petroleum pool or a labor and equipment pool.

b. Any combination of resources which serves a common purpose.

Portable Magazine – Commercially built, pre-engineered magazines frequently used as ready service lockers. While their design suggests easy relocation, these magazines are covered by all safety and citing criteria applicable to any permanently constructed magazine.

Positive Mechanical Ventilation – Circulation of air through an enclosure or area by a motor driven fan or blower.

Positive-Pressure Ventilation – Forced injection of air into an enclosure or area by a motor driven fan or blower in order to prevent material outside the enclosure or area from entering the enclosure or area by maintaining a higher pressure inside than outside of the enclosure or area.

Potential Explosion Site (PES) – The location of a quantity of explosives that will create a blast, fragment, thermal, and/or debris hazard in event of an accidental explosion of its contents. Quantity limits for ammunition/explosives at a PES are determined by the distance to an exposed site.

Powder Description Sheet – A historical record describing the details of manufacture of smokeless powder including all chemical and physical tests made on the raw materials and the finished powder on a lot by lot basis.

Powder Index – The number assigned to a lot or blend of several lots of smokeless powder after the powder has been proofed and accepted.

Practical Job Training (PJT) – The application of theoretical knowledge in laboratory or work situations.

Practice Ammunition – Ammunition specifically designed or modified for use in exercises, practice or operational training. Practice ammunition may be either expendable or recoverable. Practice ammunition is not inert and may contain all the explosive material normally contained in service ammunition. Practice ammunition may contain additional explosive material such as pyrotechnics, spotting charges or flotation devices to assure destruction, location or recovery.

Precision Measuring Equipment (PME) – Devices used to measure, gauge, test, inspect, diagnose, or examine material, supplies, and equipment to determine compliance with requirements established in technical documents, for example, research, development, test, and evaluation documents, specifications, engineering drawings, technical orders, technical manuals, maintenance instructions, and serviceability standards.

Pre-Expended Bin (PEB) – One that contains only low cost, high usage items. It is replenished from stock in the retail outlet that supports the shop in which the PEB is located.

Preventative Maintenance (PM) – The care and servicing by personnel for the purpose of maintaining equipment and facilities in satisfactory operating condition by providing for systematic inspection, detection, and correction of incipient failures either before they occur or before they develop into major defects.

Primary Explosive – Sensitive material used to initiate chemical reaction in booster explosives or as an initiation or ignition source for squibs and ignites used with propelling and pyrotechnic devices. Primary explosives are sensitive to heat, impact and shock and in warheads, are separated from the booster by the interruption of the fuze, exploder, or safe-and-arm device. Lead Styphnate and DXN-1 are examples of an approved primary explosive. Lead Azide, Mercury Fulminate are examples of restricted or obsolete primary explosives.

Primer – The primer is a mechanically or electrically initiated device, as originally used in military fuse trains, to initiate another explosive charge or the next element in the explosive train. Primers are more brisant than squibs and are of lower power than detonators.

Proactive Maintenance – This type of maintenance can be considered as either preventive or predictive in nature, and the maintenance performed includes inspection, assessment, test, diagnostics, prognostics, servicing, and scheduled replacement/overhaul. It is a goal of DOD to reduce reactive maintenance for ordnance programs in favor of maintenance strategies which preclude failure.

Procurement – The process of obtaining personnel, services, supplies, and equipment.

Procurement Contracting Officer (PCO) – A contracting officer who initiates and signs the contract.

Procurement Lead Time – The time interval between the placement of a contract and receipt into the supply system of materiel purchased. Two entries are provided:

a. Initial – The time interval if the item is not under production as of the date of contract placement; and

b. Reorder – The time interval if the item is under production as of the date of contract placement.

Production – The conversion of raw materials into products and/or components thereof, through a series of manufacturing processes. It includes functions of production engineering, controlling, quality assurance, and the determination of resources requirements.

Production Building – Any building or structure, except a magazine, in which ammunition and explosives are manufactured, renovated, reconditioned, reclaimed or demilitarized.

Program – A plan or system under which action may be taken toward a stated goal or objective. A program is generally considered to have some or all of the following elements:

a. A program manager.

b. A formalized governing directive.

c. Designated funding.

d. Standardized procedures.

e. Specialized training.

Prohibited Area – A specified area within the land areas of a state or its internal waters, archipelagic waters, or territorial sea adjacent thereto over which the flight of aircraft is prohibited. May also refer to land or sea areas to which access is prohibited.

Projectile – An object projected by an applied exterior force and continuing in motion by virtue of its own inertia, as a bullet, bomb, shell or grenade. Also applied to rockets and to guided missiles.

Propellant – Substances or mixtures of substances used for propelling projectiles and missiles, or to generate gases for powering auxiliary devices. When ignited, propellants burn at a controlled rate to produce quantities of gas capable of performing work but they must be capable of functioning in their application without undergoing a Deflagration-to-Detonation Transition (DDT).

Propelling Charge – As pertains to gun ammunition, a propelling charge consists of a primed cartridge case loaded with smokeless powder; the mouth of the case sealed by a friable plug. It is a separate unit from the projectile and is termed as a unit of "separated" ammunition.

Protective Clothing – Clothing especially designed, fabricated, or treated to protect personnel against hazards caused by extreme changes in physical environment, dangerous working conditions, or enemy action.

Protective Mask – A protective ensemble designed to protect the wearer's face and eyes and prevent the breathing of air contaminated with chemical and/or biological agents.

Provisioning – The process of determining the range and quantity of items (i.e., spares and repair parts, special tools, test equipment, and support equipment) required to support and maintain an item for an initial period of service. Its phases include the identification of items of supply, the establishment of data for catalog, technical manual, and allowance list preparation, and the preparation of instructions to assure delivery of necessary support items with related end articles.

Public Highway – Any street, road or highway not under DOD custody used by the general public for any type of vehicular traffic.

Public Highway Distance – The minimum distance permitted between a public highway and a site where ammunition and explosives are located. Refer to *Public Traffic Route*.

Public Traffic Route – Any public street, road, highway, navigable stream, or passenger railroad (includes roads on a military reservation that are used routinely by the general public for through traffic).

Puncture – A penetration through the surface of the material.

Pyrophoric – Capable of spontaneous ignition upon contact with air, water, or other materials containing oxygen.

Pyrotechnic – A mixture of chemicals which, when ignited, is capable of reacting exothermically to produce light, heat, smoke, sound or gas.

Pyrotechnic Material – The explosive or chemical ingredients, including powdered metals, used in the manufacture of military pyrotechnics.

Qualifications – A documented list of requirements an individual must satisfy prior to being certified; i.e., testing, formal classes, licenses, documented on-the-job training and experience, demonstrated task proficiency, physical, etc.

Quality Assurance (QA) – A planned and systematic pattern of all the actions necessary to provide adequate confidence that the item or product conforms to established technical requirements.

Quality Audit – A selective comparison of actual workmanship with a given set of standards or objectives.

Quality Evaluation (QE) – Obsolete term for the Navy's ordnance aging assessment program, since subsumed the OA program. This program was begun in 1944 due to reliability problems in torpedo warheads. It originally managed all aspects of ordnance quality, from manufactures acceptance through lifetime assessment. It was officially removed from use in 2008 due to inconsistent application of the term across Navy ordnance programs.

Quantity-Distance (QD) – The quantity of explosives material and distance separation relationships which provide defined types of protection. These relationships are based on levels of risk considered acceptable for the stipulated exposures and are tabulated in the appropriate quantity-distance tables contained in NAVSEA OP 5. Separation distances are not absolute safe distances but are relative protective or safe distances. Distances greater than those shown in the table should be used wherever practicable.

Quay – A structure of solid construction along a shore or bank that provides berthing and generally provides cargo-handling facilities. A similar facility of open construction is called a wharf.

Radioactive Materials – Any material or combination of materials that spontaneously emits ionizing radiation. Radioactive materials are not within the scope and purpose of this publication.

Rate of Detonation (ROD) – The ROD or velocity of detonation is the speed at which the explosive reaction progresses through the explosive. In explosive charges, this rate is normally expressed in feet per second. It varies directly with the density of loading, all other factors being constant.

Reactive Maintenance (i.e., corrective maintenance) – Performed for items that are selected to run to failure or those items that fail in an unplanned or unscheduled manner. Run to failure is often the planned maintenance strategy for items that have little readiness or safety impact.

Ready for Issue (RFI) Material – Material, equipment, aircraft, and SE which does not require rework of any type, replacement of overage parts, or other than routine pre-installation and post installation condition verification prior to use. RFI items are not necessarily new or like new, but are functionally reliable and meet applicable performance specifications. Packaging and preservation do not enter into the process of producing an RFI item but are required in order to maintain the item identity and condition and to prevent damage during subsequent shipping, handling, and storage.

Ready Service Locker (RSL) – A locker (usually small) used for the storage of small quantities of certain pyrotechnics, small arms ammunition, and minor hazard items of ammunition.

Ready Service Magazine – A magazine located in the magazine area (or near the weapon or area to be served aboard ship) and used for the temporary storage of restricted amounts of ammunition for emergency use; or in an operating line for limited amounts of explosives or components used in the production of ammunition.

Recondition – The process designed to correct defects or improve the performance of individual ammunition components which are not assembled in a complete round or subassembly.

Redundancy – The existence of more than one means for accomplishing a given function. Each means of accomplishing the function need not necessarily be identical.

Reference Number – A number used to identify an item of production or a range of items of production by the manufacturer controlling the design, characteristics, and production of the item by means of its engineering drawings, specifications, and inspection requirements.

Reference Symbol – An alphanumeric code used to identify piece parts as distinct from other items of the same part number in a single subassembly or circuit, such as four of the same diodes within a circuit; each has the same part number but a different reference symbol. Reference symbols are found in the IPB for the component.

Relay – A relay is an element of a fuse explosive train which augments an outside, and otherwise inadequate, output of a prior explosive component to reliably initiate a succeeding train component. Relays, in general, contain a small single explosive charge, such as lead azide, and are not usually employed to initiate high explosive charges.

Reliability – The probability that a system or component will perform its required functions as designed under stated conditions for a specified period of time. In terms of ordnance, the specified period of time typically extends from the command to launch/fire to the point of impact/detonation/termination. Failure to perform in conditions outside the designed operating parameters of the weapon, such as the target being too fast, are counted as design limitations rather than reliability failures.

Reliability Centered Maintenance (RCM) – RCM is a logical, structured process used to determine the optimal failure management strategies for any system based on system reliability characteristics and the intended operating context. RCM defines what must be done to a system to achieve the desired levels of safety, reliability, environmental soundness, and operational readiness, at best cost. RCM is to be applied continuously throughout the life cycle of any system.

Renovation – That work performed on ammunition, missiles, or rockets to restore them to a completely serviceable condition; usually involves the replacement of unserviceable or outmoded parts.

Repair – The restoration of an item to serviceable condition through correction of a specific failure or unserviceable condition.

Repair Cost – The cost incurred by a Navy (Organic) or Commercial Activity in repairing or overhauling an item. It includes only the costs incurred by the Depot level Maintenance Activity in direct and indirect labor, material costs, and general administrative costs.

Repair Cycle Data – An uninterrupted record of a repairable item from the time of removal until repair is completed or a reclamation or salvage determination is made.

Repair Part – Material capable of separate supply and replacement that is required for the maintenance, overhaul, or the repair of an end article, for example, airframe, accessories, instruments, engine, propeller, electrical, electronics, photographic, armament, and training equipment, including the repair parts of SE. This definition does not include the SE end items.

Repairable Item – An item that can be reconditioned or economically repaired for reuse when it becomes unserviceable.

Replacement Item – An item, functionally interchangeable with another item, but differs physically from the original in that the installation of the replacement requires operations such as drilling, reaming, cutting, filming, or shimming, in addition to the normal application and methods of attachment.

Reporting Custodian – An Organizational Unit of the lowest echelon of command accepting responsibility, involving the accountability to the CNO, for weapons and weapon systems, as designated either by CNO or by the ACC.

Reporting Custody – Responsibility to account for and provide information about assigned armament or WSE. This does not necessarily imply physical custody.

Resources – The forces, materiel, and other assets or capabilities apportioned or allocated to the commander of a unified or specified command.

Restricted Area –

a. An area (land, sea, or air) in which there are special restrictive measures employed to prevent or minimize interference between friendly forces.

b. An area under military jurisdiction in which special security measures are employed to prevent unauthorized entry.

Retrofit – Incorporation of an engineering change, at any level, in accepted or in-service items.

Retrofit Action – Action taken to modify inservice equipment.

Rework – As pertains to smokeless powder, rework is the process of grinding the grains of remnant lots of serviceable or obsolete powder for the recovery of certain ingredients, mainly the nitrocellulose, and producing of new lots of powder by addition of required ingredients and necessary processing.

Rework Facility –

a. Primary – A facility designated by COMNAVAIRSYSCOM as having the primary D-level maintenance responsibility for each aircraft, engine, or equipment. In addition to conducting rework, overhaul, or repair of the material listed, the designation as primary rework facility for aircraft and engines carries with it the responsibility for providing engineering and logistic services. When primary D-level maintenance responsibilities are contracted for, engineering and logistic services will be provided for that aircraft or engine by a separately designated rework facility which will also normally be assigned primary manufacturing cognizance.

b. Alternate – The facility, if any, which is assigned maintenance workload for aircraft, engines, or equipment for which another facility has been designated as the primary rework facility. The alternate rework facility will assume supporting engineering responsibilities as a participating field as requested by and negotiated with the primary rework facility, and will normally have responsibility for secondary manufacturing cognizance which may be separately assigned a rework facility by COMNAVAIRSYSCOM.

Runway – Any surface on land designated for aircraft take-off and landing operations, or a designated lane of water for take-off and landing operations of seaplanes.

Runway Visual Range – The maximum distance in the direction of takeoff or landing at which the runway, or specified lights or markers delineating it, can be seen from a position above a specified point on its center line at a height corresponding to the average eye level of pilots at touch-down.

Safe Haven –

a. Designated area(s) to which noncombatants of the United States Government's responsibility and commercial vehicles and materiel may be evacuated during a domestic or other valid emergency.

b. Temporary storage provided to Department of Energy classified shipment transporters at Department of Defense facilities in order to assure safety and security of nuclear material and/or nonnuclear classified material. Also includes parking for commercial vehicles containing Class A or Class B explosives.

c. A protected body of water or the well deck of an amphibious ship used by small craft operating offshore for refuge from storms or heavy seas.

Safe Working Load – The maximum static load (in pounds or kilograms) which can be lifted or handled by a piece of handling equipment such as slings, forklift trucks, beams, and similar handling equipment. The safe working load shall be marked on the lifting equipment. The terms "safe working load," "capacity," or "rated load" are considered synonymous.

Safety Distance – In road transport, the distance between vehicles traveling in column specified by the command in light of safety requirements. See also *Quantity-Distance (QD)*.

Safety Shoes – Specifically designated footwear of three general types:

a. Industrial safety shoes with hard toes or other resistive physical characteristics.

b. Spark-proof safety shoes containing no exposed metal for use in locations where friction sparks are hazardous.

c. Conductive sole safety shoes used where static electricity or friction hazards are present.

d. Safety shoes can also consist of a combination of the above features.

Safety Tools – Tools constructed of wood, fiber, and other substances such as bronze, lead, Monel metal and beryllium alloys having low sparking characteristics and which will not produce sparks under normal conditions of use. The use of this type of tool is mandatory when hand tools are used in connection with certain explosives and ammunition operations, at which time they will be so specified. The use of this type of tool is not required in the absence of exposed explosives.

Saluting Charge – Similar to a propelling charge, but is loaded with a small quantity of black powder in lieu of smokeless powder. Used only for ceremonial saluting purposes.

Salvage –

a. Property that has some value in excess of its basic material content but is in such condition that it has no reasonable prospect of use for any purpose as a unit and its repair or rehabilitation for use as a unit is clearly impractical.

b. The saving or rescuing of condemned, discarded, or abandoned property, and of materials contained therein for reuse, refabrication, or scrapping.

Sample – One or more units of product drawn from a lot or batch selected at random without regard to their quality. The number of units of product in the sample is the sample size.

Sampling Plan – A statement of statistically valid sample size or sizes to be used and the associated acceptance and rejection criteria.

Scheduled Maintenance – Periodic prescribed inspection and/or servicing of equipment accomplished on a calendar, mileage, or hours of operation basis.

Scratch – A minor surface degradation involving minor removal of paint or minor marking of an unpainted surface.

Screening Smoke – A chemical agent which, when burned, hydrolyzed, or atomized produces an obscuring smoke; used to limit observation and reduce effectiveness of aimed fire. Screening smoke is not normally used for toxic effect against personnel.

Scuttling Site – An area of water specifically designated for positioning a ship for flooding or sinking under emergency situations.

Sea Operational Detachment (SEAOPDET) – A sea duty component assigned to shore IMAs used to augment the aircraft carrier's IMA in support of Carrier Air Wing embarkations.

Second-Degree Repair – The repair of damaged equipment or its accessories, or components to an acceptable operating condition.

Secretarial Certification – Issued at the Secretary of the Navy level when a construction project cannot meet explosive safety criteria but must be constructed due to operational necessity. This form of certification is issued in lieu of a conventional site approval.

Secure Explosives Holding Area – An area designated for the temporary parking of commercial carriers' motor vehicles transporting DOD-owned Arms Ammunition, and Explosives (AA&E).

Secure Non-Explosives Holding Area – An area designated for the temporary parking of commercial carriers motor vehicles transporting Categorized DOD Arms, classified (SECRET or CONFIDENTIAL) materials, and Controlled Cryptographic Items (CCI).

Segregation - The process of determining the current material condition of suspended condition unknown ammunition and separating it into acceptable groupings by type and configuration.

Segregation Facility – A building or series of buildings where Fleet return material is screened and grouped by type and physical condition.

Sensitive Materials – Sensitive materials are weapons, ammunition and explosives vulnerable to theft and having a ready-sale potential in illicit markets, or having a ready use during civil disturbances. Sensitive materials include items such as rifles, grenades, pyrotechnics, and explosives.

Sensitivity – Refers to the ability of an explosive to be initiated by an input of a limited amount of energy. Primary explosives require significantly less energy input to initiate than secondary explosives. The relative sensitivity of two explosives may vary depending on the type of energy input. For instance, one explosive may be relatively insensitive to impact but relatively sensitive to electrostatic discharge.

Sentencing - Sentencing is the inspection of ammunition items and their evaluation against the criteria in NAVSUP P-805 and P-807, and then assigning of ammunition condition and defect codes reflecting what was found in the inspection related to serviceability, defects and corrective actions required. This is to include applying any NAR direction.

Separated Ammunition – Ammunition in which the projectile and the cartridge case are two units that are usually loaded into the gun separately.

Separate-Loading Ammunition – Ammunition in which the projectile and charge are loaded into a gun separately.

Serial Number (SERNO or S/N) – A number that identifies a specific end item or component. The number is usually assigned by the manufacturer and is used to differentiate between a particular end item or component and others of the same T/M/S, design, etc.

Service Ammunition – Ammunition intended for combat rather than for training purposes.

Service Explosives – High, initiating, or low explosives that are used principally and primarily in the loading, preparation, and assembly of ammunition of all types for the Armed Forces as

contrasted by explosives for commercial use such as dynamite, blasting gelatin, black powders, or permissible explosives which are granulated or prepared for blasting, mining, and construction purposes.

Service Test – A test of an item, system of materiel, or technique conducted under simulated or actual operational conditions to determine whether the specified military requirements or characteristics are satisfied.

Serviceable – The condition of an end item in which all requirements for repair, bench check, overhaul, or modification (as applicable) have been accomplished making it capable of performing the function or requirements for which originally designed. The fact that signs of previous use are apparent does not necessarily mean it is unserviceable. When appearance is not a primary consideration, and the condition of the item meets all safety and performance requirements, it will be processed as serviceable.

Servicing – The replenishment of consumables needed to keep an item in operating condition, but not including any other preventive maintenance. Also see *Common Servicing*; *Cross Servicing*; *Joint Servicing*; and *Interservice Support and Services*.

Set – A unit or units and the necessary assemblies, subassemblies, and parts connected or associated together to perform an operational function.

Shall – Used only when an application of a procedure is mandatory.

Shared Launch Facility – Any space or orbital launch facility that supports both DOD and non-DOD launch services and operations, as determined by service involved or by mutual agreement when multiple DOD military services are involved.

Ship Operations – For the purpose of the NOMP, all ordnance or weapon missions that take place aboard a carrier/ship will be designated as ship operations.

Ship or Barge Units – Combination of ammunition ships, barges or piers/wharves not separated from one another by the required distance to prevent propagation between units.

Shore Establishment – Comprised of shore activities with defined missions approved for establishment by SECNAV.

Should – Used only when an application of a procedure is recommended.

Signaling Smoke – Any type of smoke, usually colored, emitted from a hand or rifle grenade or from a pyrotechnic signal.

Single-Base Powder – A casting powder whose principal explosive ingredient is nitrocellulose.

Single-Chamber Storage Site – An excavated chamber with its own access to the natural ground surface, not connected to any other storage chamber.

Single Revetted Barricade – A mound which has been modified by a retaining wall, preferably of concrete, of such slope and thickness as to hold firmly in place the three feet width of earth required for the top with the earth at the natural angle on one side. All other requirements of a mound shall be applicable to the single revetted barricade.

Small Arms Ammunition – Ammunition for small arms, i.e., all ammunition up to and including 20 millimeters (.787 inches).

Solid Propellant – Explosives compositions used for propelling projectiles and rockets and to generate gases for powering auxiliary devices.

Spares – Articles identical to, or interchangeable with, the end articles on contract that are procured over and above the quantity needed for initial installation for support of an aeronautical system.

Spark Proof – The term used to describe equipment which is so designed to ensure no flames or sparks will escape to the surrounding atmosphere from within its case or enclosure. Also referred to as spark-enclosed.

Special Weapons – A term sometimes used to indicate weapons grouped for special procedures, for security, or other reasons. Specific terminology, e.g., "nuclear weapons" or "guided missiles," is preferable.

Specification – A document intended primarily for use in procurement, which clearly and accurately describes the essential technical requirements for items, materials, or services, including the procedures by which it will be determined that the requirements have been met.

Squib – A small pyrotechnic device that may be used to fire the igniter in a rocket or for some similar purpose. Not to be confused with a detonator that explodes.

Stability – The ability of any ammunition or explosive to withstand adverse conditions and deterioration while in storage or use.

Stacks – Safe orderly groupings of explosives, ammunition, and related component parts in storage.

Standard Navy Distribution List (SNDL) – Provides official address and distribution information for the Naval establishment.

Standard Operating Procedure (SOP) – A document which prescribes operator instructions in a definite course of action for processing a work unit. It is a tool for managing resources through planning and scheduling manpower, equipment, facilities and material in producing a quality product safely and efficiently. An SOP includes specifications, safety instructions and performance standards.

Standard Training Activity Support System (STASS) – Standardized comprehensive day to day integrated automated classroom support that feeds corporate level data to NITRAS II.

Standardization – The process by which the Department of Defense achieves the closest practicable cooperation among the Services and Department of Defense agencies for the most efficient use of research, development, and production resources, and agrees to adopt on the broadest possible basis the use of:

a. Common or compatible operational, administrative, and logistic procedures.

b. Common or compatible technical procedures and criteria.

c. Common, compatible, or interchangeable supplies, components, weapons, or equipment.

d. Common or compatible tactical doctrine with corresponding organizational compatibility.

Standards Laboratory – A laboratory under the control of the military departments or any agency of DOD that provides calibration services for certifying the calibration standards of calibration installations. These laboratories normally obtain certification of their standards from the National Institute of Standards and Technology.

Standing Operating Procedure – A set of instructions covering those features of operations which lend themselves to a definite or standardized procedure without loss of effectiveness. The procedure is applicable unless ordered otherwise.

Static Test Stand – Locations where liquid propellant engines or solid propellant motors are tested in place.

Status Codes (MILSTRIP) – Codes that furnish information from supply sources to requisitioners or cosigners on the status of requisitions. Supply status (except "rejection" status, code C) predicts shipment on time as specified by the priority delivery date or the required delivery date.

Storage Compatibility – See *Compatibility.*

Storage Compatibility Group – The compatibility group for ammunition, explosives and/or other hazardous materials which can be stored together without significantly increasing the probability of accident or, for a given quantity, the magnitude of the effects of such an accident. The compatibility groups are based on the system recommended for international use by the United Nations Organization (UNO) and as adopted by the Department of Defense. Refer to NAVSEA SW020-AC-SAF-010 for the descriptions of each compatibility group.

Storehouses – Buildings assigned for the storage of inert ammunition components or ammunition details such as empty (unprimed) cartridge cases, empty (inert) projectiles, tanks, ammunition boxes, wads, plugs, raw silk, bomb fins, and other nonhazardous supplies and equipment.

Subassembly – In logistics, a portion of an assembly, consisting of two or more parts, that can be provisioned and replaced as an entity.

Substantial Dividing Wall – An interior wall designed to prevent simultaneous detonation of explosives on opposite sides of the wall. However, such walls may not prevent propagation (depending on quantities and types of explosives involved).

Substitute Items – Two or more items possessing such functional and physical characteristics as to be capable of being exchanged only under certain conditions or in particular applications and without alteration of the items themselves or of adjoining items.

Substructure – The portion of the wharf or pier construction which is located below the deck and including the deck.

Subsystems – A combination of two or more pieces of equipment, generally physically separated when in operation, and such other components, assemblies, subassemblies and parts necessary to perform an operational function or functions.

Superstructure – The portion of the wharf or pier construction located above the deck.

Supervisor – Any Employee, Officer, and Petty Officer, designated by the Commanding Officer, Ordnance Officer, or other Head of a Department at a shore station to oversee and inspect personnel and employees and their operations.

Supplemental Documentation – Work Review Forms, Work Request Forms, Work Order Forms, Lab Review Forms, Mix Sheets, Batch Sheets, Test Plans, signed and witnessed notebooks, or any other local instruction or procedure which is supplemental to an SOP and specifies how specific operations are to be performed.

Supplies – In logistics, all materiel and items used in the equipment, support, and maintenance of military forces.

Support –

a. The action of a force that aids, protects, complements, or sustains another force in accordance with a directive requiring such action.

b. A unit that helps another unit in battle.

c. An element of a command that assists, protects, or supplies other forces in combat.

Support Equipment (SE) – IMRL and non-IMRL equipment required to make an aeronautical system, command and control system, support system, subsystem, or end item of equipment (SE for SE) operational in its intended environment. This includes all equipment required to launch, arrest (except Navy shipboard and shore-based launching and arresting equipment), guide, control, direct, inspect, test, adjust, calibrate, gauge, measure, assemble, disassemble, handle, transport, safeguard, store, actuate, service, repair, overhaul, maintain, or operate the system, subsystem, end item, or component.

Support Equipment Controlling Authority (SECA) – A term applied to major aviation commands that exercise administrative control of the AMMRL Program SE end items for allowance and inventory control. The following are designated SECAs: COMNAVAIRLANT, COMNAVAIRPAC, CNET, COMNAVAIRESFOR, COMNAVAIRSYSCOM, and CNATT.

Support Equipment Standardization System (SESS) – A microcomputer based asset control system for WSE.

Support Facilities – Ammunition and explosives storage or operations which solely support the function of tactical or using units as distinguished from storage depots or manufacturing facilities.

Support Item – An item subordinate to or associated with end items (i.e., spares, repair parts, and support equipment).

Surveillance – A program of extracting and testing samples, (either at the system level or of subcomponents) from the inventory. These samples are used in the Inventory Assessment Test or Safety Assessment for Energetics process. Samples are usually deliberately selected to reflect perceived worst-case characteristics of the population and worst exposure.

Surveillance – The systematic observation of aerospace, surface, or subsurface areas, places, persons, or things, by visual, aural, electronic, photographic, or other means.

Suspect Cargo Site – A designated location for placing trucks and railcars containing ammunition or explosives that are suspected of being in a hazardous condition. These sites also are used for trucks and railcars that may be in a condition that is hazardous to their contents.

Sympathetic Detonation – Detonation of a charge by exploding another charge adjacent to it.

System – A functionally, physically, and/or behaviorally related group of regularly interacting or interdependent elements; that group of elements forming a unified whole.

Systems Engineering – The overarching process that a program team applies to transition from a stated capability to an operationally effective and suitable system. Systems Engineering encompasses the application of Systems Engineering processes across the acquisition life cycle (adapted to each life-cycle phase) and is intended to be the integrating mechanism for balanced solutions addressing capability needs, design considerations, and constraints, as well as limitations imposed by technology, budgets, and schedules. The Systems Engineering processes, aligned with the enterprise-wide sustainment strategy, are applied early on in concept definition and then continuously throughout the total life cycle. Expanded information on Systems Engineering is provided in Chapter 4 of the "Systems Engineering Plan (SEP) Preparation Guide" (Reference (l)), the USD(AT&L) memorandum of October 22, 2004, and Chapter 5 of the "Defense Acquisition Guidebook", which can all be found on the Defense Acquisition University (DAU) website.

Tactical Facilities – Prepared locations with an assigned combat mission, such as missile-launch facilities, alert aircraft parking areas or fixed-gun positions.

Taxiway – A specially prepared or designated path on an airfield for the use of taxiing aircraft.

Technical Data – Data required for the accomplishment of logistics and engineering processes in support of the contract end item. It includes drawings, operating and maintenance instructions, provisioning information, specifications, inspection and test procedures, instruction cards and equipment placards, engineering and support analysis data, special purpose computer programs, and other forms of audiovisual presentation required to guide personnel in the performance of operating and support tasks.

Technical Directive (TD) – A document authorized and issued by COMNAVAIRSYSCOM to provide technical information necessary to properly and systematically inspect or alter the configuration of aircraft, engines, systems, or equipment subsequent to establishment of each respective baseline configuration. TDs include all types of changes and bulletins and consist of information that cannot be disseminated satisfactorily by revisions to technical manuals. NATEC controls assignment of TD numbers.

Technical Directive (TD) Code – A two-character numeric code that identifies the type of TDs.

Technical Directive (TD) Identification Code – A 12- or 13-character alphanumeric code used to identify a specific TD.

Technical Directive (TD) Status Code – A one-character alphabetic code used to indicate the status of compliance with a TD.

Technical Escort – An individual technically qualified and properly equipped to accompany designated material requiring a high degree of safety or security during shipment.

Technical Evaluation – The study and investigations by a developing agency to determine the technical suitability of material, equipment, or a system for use in the Military Services.

Technical Manual – A publication containing a description of equipment, weapons, or weapon system(s) with instructions for effective use. Included are one or more of the following sections: instructions covering initial preparation for use, operational instructions, modification instructions, maintenance instructions, parts lists or parts breakdown, and related technical information or procedures, exclusive of those of an administrative nature.

Tenant – Any activity that will be aboard a ship or station for a period of time sufficient to require specific assignment of shop, hangar, crew, and equipment or line spaces. Activities may use a facility as an assigned tenant or as a joint tenant. Specific spaces may be assigned on a rotational, seasonal, occasional, or transient basis as appropriate.

Threshold Limit Value (TLV) – The concentration of a substance in air above which repeated (daily) exposure may cause adverse effects in personnel. The term is synonymous with maximum allowable concentration or maximum permissible concentration.

TNT Equivalent – A measure of the energy released from the detonation of a nuclear weapon, or from the explosion of a given quantity of fissionable material, in terms of the amount of TNT (trinitrotoluene) which could release the same amount of energy when exploded.

Tool Control Manual (TCM) – Contains information that includes material requirements, tool inventories, and detailed instructions for the implementation and operation of the Tool Control Program for a specific type/model aircraft.

Top-Off – In explosive loading, a "top-off" operation is the addition of explosive to a casing or round to fill cavities created by the cooling and shrinkage of molten explosives. For ships, it is the loading of a small amount of ammunition to complete the ships allowance of items (projectiles, propelling charges, etc.).

Total Life-Cycle Systems Management (TLCSM) – The implementation, management, and oversight by the designated PM of all activities associated with the acquisition, development, production, fielding, sustainment, and disposal of a DOD ordnance system across its life cycle. The TLCSM approach to system development is optimized if it targets, as a major end state goal, operations and maintenance phase effectiveness and affordability. TLCSM is distinguished by the translation of force provider-specified levels of performance into deliverable capabilities that represent system readiness, availability, and logistics supportability. "Defense Acquisition Guidebook," as amended, December 20, 2004 is the DOD reference for TLCSM.

Toxic Chemical Agent – A toxic chemical that may be used effectively in field concentrations to produce injury or death. Toxic chemical agents are classified tactically as casualty agents.

Toxic Chemicals – Toxic chemicals are defined by the Department of Transportation according to the degree of poisonous hazard in transportation. These classifications used by the Navy for transportation purposes and equally applicable for handling and storage of chemical agents and chemical ammunition, are as follows:

a. Class A. Extremely Dangerous Poisons. Poisonous gases or liquids of such nature that a very small amount of the gas or vapor of the liquid mixed with air is dangerous to life.

b. Class B. Less Dangerous Poisons. Substances, liquids or solids (including pastes and semi-solids), other than Class A poisons or irritant materials, which are known to be so toxic to man as to afford a hazard to health during transportation or which, in the absence of adequate data on human toxicity, are presumed to be toxic to man because of the effect they produce on laboratory animals under certain controlled conditions.

c. Irritating Substances. Liquid or solid substances which upon contact with fire or when exposed to air give off dangerous or intensely irritating fumes. This category does not include any Class A poisonous articles.

Toxicity – The property possessed by a material which enables it to injure the physiological mechanism of an organism by chemical means, with the maximum effect being death.

Training Aids – Any item developed or procured with the primary intent that it shall assist in training and the process of learning.

Transaction Code (TRCODE) – A two-character numeric code used to denote the type of data being reported, and to indicate the record type to be produced.

Transaction Item Report (TIR) – A separate report by item and by transaction of an action which affects stock status.

Transfer – The act of conveying reporting/controlling custody of an Aircraft/SE to another custodian.

Transfer Depot – A permanent facility used to transfer ammunition and explosive between automotive vehicles and railcars for further shipment, or for delivery to a storage magazine or loading building.

Tray – A wood or metal platform, with sideboards, upon which cargo is placed so that the cargo and tray may be moved as a unit.

Triboelectricity – Electricity generated by friction.

Troop Test – A test conducted in the field for the purpose of evaluating operational or organizational concepts, doctrine, tactics, and techniques, or to gain further information on material.

Truck Holding Yard – A location where trucks containing ammunition or explosives are held for interim periods of time prior to storage or shipment.

Turnaround – The length of time between arriving at a point and being ready to depart from that point. It is used in this sense for the loading, unloading, re-fueling, and re-arming, where appropriate, of vehicles, aircraft, and ships.

Turnaround Time (TAT) – TAT is:

a. The time period that commences with the time an aircraft is removed from an operating unit to undergo a rework process and terminates when the reworked aircraft is returned to an operating unit. A change of reporting and controlling custody is not necessarily involved;

however, a change in physical custody is always involved. TAT is the sum of the following: time enroute from an operating unit to the naval facility, time awaiting rework, time in rework, time awaiting flight check after rework, time in a COMNAVAIRSYSCOM RFI status, and time enroute to an operating unit.

b. The time needed to service, inspect, and check an item prior to recommitment.

c. The interval between the time a repairable item is removed from use and the time it is available for reissue in a serviceable condition.

Turnaround Time (TAT) (Recoverable Missile Targets) – For recoverable missile targets, TAT is the total time required to perform a complete post launch rehabilitation inspection commencing with the onset of decontamination of a recovered target and including all scheduled and unscheduled maintenance and testing required to return it to a launch ready condition.

Unbarricaded – No effective barricade between magazines, operating buildings, stacks, or other buildings opposed one to another.

Underground Storage – Storage in a cavern or chamber storage site provided that, in case of an accidental explosion in the storage site, the overhead cover does not fail and all exterior hazardous effects are limited to blast and debris from the entrance.

Unit of Issue – The quantity of an item, such as each number, dozen, gallon, pair, pound, ream, set, or yard. Usually termed “unit of issue” to distinguish from “unit price”.

Unit of Powder – An increment of an index of smokeless powder obtained from ammunition breakdown.

Unit Risk – The risk to personnel and/or facilities that is associated with debris, fragment and/or blast hazards that are the result of the detonation of a single round of ammunition.

Unscheduled Maintenance (UNS) – Maintenance, other than the fix phase of scheduled maintenance, occurs during the interval between scheduled downtime maintenance periods.

Unserviceable Ammunition – Ammunition reclassified to unserviceable because of a change in expected service or shelf life, or due to deterioration or damage. Unserviceable ammunition is identified by:

a. COMNAVSEASYSCOM through issue of Notices of Ammunition Reclassification and NAVSUP P-801, “Ammunition Unserviceable, Suspended and Limited Use.”

b. Inspection which may reveal defective ammunition such as:

(1) Improper seating of fuze in rocket warheads.

(2) Warheads which are cracked, dented, bent and with recesses which are corroded.

(3) Ruptured missile seeker heads.

(4) Dented or deformed pyrotechnics.

(5) Leaking chemical ammunition.

(6) Exudate of leakages from ammunition item.

c. Reports of ammunition or components dropped five feet or more (two feet for RAP).

Upkeep – The preventive, restorative, or additive work performed on aircraft, equipment, and SE by operating units and aircraft SE activities. The term applies to any method of processing aircraft required to ensure the completion of standard operating periods or service tours, including but not limited to the servicing, periodic inspections, functional and bench test, replacement, preservation, modification, and repair. An upkeep process extends from the time some of the work is started until all the work is completed, including temporary interruptions in direct labor; it also includes upkeep, evaluation, test, and correction of discrepancies determined thereby. Upkeep is divided into two categories, standard and special.

a. Standard Upkeep – The periodic or scheduled work performed on aircraft, aircraft equipment, and aircraft SE after (and as a result of) completion of a prescribed number of flying hours, operating hours, or calendar days per prescribed inspection or replacement requirements and such that the end product requirement of the work includes the capability of aircraft or equipment to serve a full prescribed period of flying hours, operating hours, or calendar days before undergoing upkeep again.

b. Special Upkeep – The work done to aircraft, aircraft equipment, and aircraft SE to improve, change, or restore their capability to perform specific missions or functions by replacement, removal, addition, alteration, or repair of parts/equipment/aircraft, without particular regard to flying hours, operating hours, calendar days, or operating periods. Special upkeep includes, but is not limited to, modification, repair, and unscheduled inspection, replacement, or test.

c. Use (Primary) – The primary reason an operating unit has an allowance of operating aircraft and equipment.

Utilization – The average number of hours per unit period of time an item is actually in use.

Vacuities – Empty spaces or cavities.

Vapor Pressure – The mean force in psi (absolute) exerted by the gas or vapor from a liquid on the surroundings.

Velocity of Detonation – See *Rate of Detonation (ROD)*.

Vendor – A manufacturer or supplier of a commercial item.

Visual Information Display System/Maintenance Action Form (VIDS/MAF) – A multi-purpose document used in the MDS and VIDS.

Waiver – Written authority which provides a temporary exception and permits deviation from a mandatory requirement. It is generally granted for short periods of time pending cancellation as a result of termination of scheduled work commitments or correction of the waived conditions.

Warhead – That part of a missile, projectile, torpedo, rocket, or other munition which contains either the nuclear or thermonuclear system, high explosive system, chemical or biological agents, or inert materials intended to inflict damage.

Warning –

a. A communication and acknowledgment of dangers implicit in a wide spectrum of activities by potential opponents ranging from routine defense measures to substantial increases in readiness and force preparedness and to acts of terrorism or political, economic, or military provocation.

b. Operating procedures, practices, or conditions that may result in injury or death if not carefully observed or followed.

Waste Military Munition – A military munition is a "waste" if it is either a solid or hazardous waste under regulations implementing (42 U.S.C. Section 9601 et.seq.) or defined as a waste under the Navy or Marine Corps activities formal written policies and procedures. In general:

a. An unused military munition is a solid waste when any of the following occurs:

(1) The munition is abandoned by being disposed of, burned, detonated (except during intended use), incinerated, or treated prior to disposal.

(2) The munition is removed from storage in a military magazine or other storage area for the purpose of being disposed of, burned or incinerated, or treated prior to disposal.

(3) The munition is deteriorated or damaged (e.g., the integrity of the ammunition is compromised by cracks, leaks, or other damage) to the point that it cannot be put into serviceable condition, and cannot reasonably be recycled or used for other purposes, or

(4) An authorized military official has declared the munition a solid waste.

b. A used or fired military munition is a solid waste:

(1) When transported off-range or from the site of use, where the site of use is not a range, for the purposes of storage, reclamation, treatment, disposal, or treatment prior to disposal.

(2) If recovered, collected, and then disposed of by burial, or landfilling either on or off a range.

c. For purposes of Resource Conservation and Recovery Act (RCRA) Section 1004 (27), a used or fired military munition is a solid waste, and therefore is potentially subject to RCRA corrective action authorities under Section 3004 (u) and (v), and Section 3008 (h), or imminent and substantial endangerment authorities under Section 7003, if the munition lands off-range and is not promptly rendered safe and/or retrieved. Any imminent and substantial threats associated with any remaining material must be addressed. If remedial action is not feasible, the operator of the range must maintain a record of the event for as long as any threat remains. The record must include the type of munition and its location (to the extent the location is known). For further clarification, see 40 CFR 266.202 under definition of solid waste.

Water-Activated Material – Material which reacts violently upon mixture with water.

Water Reactive Material (Solid) – Any solid substance (including sludges and paste) which, by interaction with water, is likely to become spontaneously flammable or to give off flammable or toxic gases in dangerous quantities.

Weapon System – A combination of one or more weapons with all related equipment, materials, services, personnel, and means of delivery and deployment (if applicable) required for self-sufficiency.

Weapons Department – The part of an activity responsible for the ordnance assembly, loading and maintenance functions, also considered a maintenance activity. In the shore establishment, activities responsible for I-Level maintenance will have Weapons Departments or NMC Detachments.

Weapons Handling Equipment (WHE) – A category of WSE which provides direct support to the weapons item. This equipment includes both peculiar and common ordnance handling and transportation equipment, as well as tools used for canning/decanning, magazine handling, and assembly of weapons/ordnance related items. Examples of this equipment include hoisting beams, weapons carriers, strongbacks, hand-lift trucks, handling bands, magazine lifting slings, weapons skids, trailers, bomb trucks (non-self powered) and their associated tools, gauges, jigs, alignment bars, bomb assembly tables, maintenance stands, and other weapons related equipment. This equipment supports both air and surface-launched weapons.

Weapons Replaceable Assembly (WRA) – A generic term, includes all the replaceable packages of an avionic equipment, pod, or system as installed in an aircraft weapon system, with the exception of cables, mounts, and fuse boxes or circuit breakers.

Weapons Support Equipment (WSE) – A category of SE where the principal function is support of the explosive ordnance component or weapon that is used primarily by the Weapons Department or NMC Detachment. This equipment may be defined further as being related to air launched, surface, or sub-surface fired weapons. Air-launched related equipment includes both mechanically/electrically operated handling equipment and electronic test equipment, defined as WHE and weapons test equipment, respectively.

Weapons System Planning Document (WSPD) – Provides base loading data, planned procurements, delivery schedules, system inventories, planning factors, material support policy, training plans, and other related planning information.

Weapons Test Equipment – Specialized equipment of an electrical or electronic design used to test, maintain, or service aircraft weapons, bombs, rockets, missiles, special weapons, torpedoes mines, or any other explosive ordnance. This equipment is a category of WSE.

Weatherproof – The term used to describe equipment so constructed or protected that exposure to the weather will not interfere with its successful operation. Rain tight or watertight equipment may not fulfill the requirements for a weatherproof enclosure. Consideration should be given to conditions resulting from snow, ice, dust and temperature extremes.

Wharf – A structure built of open rather than solid construction along a shore or a bank that provides cargo-handling facilities. A similar facility of solid construction is called a quay.

Will – Used to indicate futurity, never to indicate any degree of requirement for application of a procedure.